MARTIN MARIETTA ENERGY SYSTEMS LIBRARIES
3 4456 0361477 4

5

CENTRAL RESEARCH LIBRARY
DOCUMENT COLLECTION

ORNL-2921
UC-4 - Chemistry-General

CONTROLLED POTENTIAL COULOMETRIC TITRATION OF PLUTONIUM – APPLICATION TO PRFR SAMPLES

W. D. Shults

CENTRAL RESEARCH LIBRARY
DOCUMENT COLLECTION
LIBRARY LOAN COPY
DO NOT TRANSFER TO ANOTHER PERSON
If you wish someone else to see this document, send in name with document and the library will arrange a loan.

OAK RIDGE NATIONAL LABORATORY
operated by
UNION CARBIDE CORPORATION
for the
U.S. ATOMIC ENERGY COMMISSION

Printed in USA. Price $1.00. Available from the

Office of Technical Services
Department of Commerce
Washington 25, D.C.

LEGAL NOTICE

This report was prepared as an account of Government sponsored work. Neither the United States, nor the Commission, nor any person acting on behalf of the Commission:

A. Makes any warranty or representation, expressed or implied, with respect to the accuracy, completeness, or usefulness of the information contained in this report, or that the use of any information, apparatus, method, or process disclosed in this report may not infringe privately owned rights; or

B. Assumes any liabilities with respect to the use of, or for damages resulting from the use of any information, apparatus, method, or process disclosed in this report.

As used in the above, "person acting on behalf of the Commission" includes any employee or contractor of the Commission, or employee of such contractor, to the extent that such employee or contractor of the Commission, or employee of such contractor prepares, disseminates, or provides access to, any information pursuant to his employment or contract with the Commission, or his employment with such contractor.

ORNL-2921

Contract No. W-7405-eng-26

Analytical Chemistry Division

CONTROLLED POTENTIAL COULOMETRIC TITRATION OF PLUTONIUM— APPLICATION TO PRFR SAMPLES

W. D. Shults

DATE ISSUED

APR 11 1960

OAK RIDGE NATIONAL LABORATORY
Oak Ridge, Tennessee
operated by
UNION CARBIDE CORPORATION
for the
U.S. ATOMIC ENERGY COMMISSION

MARTIN MARIETTA ENERGY SYSTEMS LIBRARIES

3 4456 0361477 4

TABLE OF CONTENTS

1.	Abstract	1
2.	Summary	1
3.	Introduction	1
4.	Discussion	2
5.	Experimental and Procedure	16
	5.1 Instrument	16
	5.2 Titration Assembly	17
	5.3 Reagents	20
	5.4 Procedure	20
6.	Results	22
7.	Conclusions	22
8.	Acknowledgements	26
9.	References	27

1. Abstract

The controlled potential coulometric titration of plutonium and its application to Power Reactor Fuel Reprocessing pilot plant samples is discussed. Proper conditions for the satisfactory routine performance of this method and the effects of various potential interferences are established. Data are given which indicates the precision and accuracy to be expected under ideal and operating conditions.

2. Summary

The determination of plutonium by controlled potential coulometric titration has been successfully applied to Power Reactor Fuel Reprocessing pilot plant samples. The procedure has been used, in conjunction with the ceric sulfate potentiometric method for plutonium determination, over a period of several months with excellent results. A considerable savings in time and an increase in precision is gained by use of this method for this application.

3. Introduction

The coulometric titration of small amounts of plutonium with ferrous ion which was electrolytically generated at constant current has been reported by Carson.[1] That procedure involved rather lengthy chemical valence adjustment prior to sample titration and was applied to the determination of microgram quantities of plutonium. More recently, Scott

and Peekema[7,8] have demonstrated that milligram quantities of plutonium can be determined very precisely by coulometric titration at controlled potential without prior valence adjustment. Therefore, that procedure has been studied at ORNL with two purposes in mind: (1) analysis of plutonium "product" samples deriving from the Power Reactor Fuel Reprocessing pilot plant, i.e., 4.5 M HNO_3 solution containing 40-60 mg Pu/ml, and (2) analysis of dissolver solutions of the Purex type, i.e., uranyl nitrate solutions composed of 300 mg U/ml in 2 M HNO_3 and containing ~0.5 mg Pu/ml. This report is concerned with the first of these objectives. The results of the second phase of this program will be reported subsequently.

4. Discussion

So-called "product" samples from the Power Reactor Fuel Reprocessing (PRFR) pilot plant are plutonium nitrate solutions which routinely contain 40-60 mg Pu/ml in 4.5 M HNO_3 with microgram quantities of iron and sometimes milligram quantities of uranium as contaminants. An accurate knowledge of the plutonium content of these samples is required by the plant and is normally gained by potentiometric titration of plutonium using ceric sulfate as the titrant.[2] It is a precise method but has several disadvantages, the most serious being that small amounts of iron and uranium constitute serious interferences and must either be removed or corrected for. Furthermore, since sample aliquots must be

fumed with sulfuric acid in order to remove nitrates before titration, it is a rather time consuming procedure. The controlled potential coulometric titration of plutonium developed originally by Scott and Peekema[7] seemed to be especially suited to the analysis of this type of solution because it is not sensitive to the presence of nitrate or uranium and is tolerant to small amounts of iron. The procedure described herein is similar in principle to that procedure.

Plutonium(III) can be quantitatively oxidized and Pu(IV) can be quantitatively reduced electrolytically with 100% current efficiency at a platinum electrode. The redox potential for this couple is such that, by suitable control of the electrode potential, Pu(IV) can be completely reduced to Pu(III) without appreciable reduction of small amounts of ferric iron. The Pu(III) thus prepared can then be oxidized back to Pu(IV) at a second electrode potential and the current consumed in this electrolysis is a measure (via Faraday's law) of the amount of plutonium titrated. The electrode potentials are chosen so that the amount of iron reduced and oxidized in the cycle is insignificant. Other ions such as uranium whose redox potential is widely different from that of plutonium do not interfere by direct reaction at the electrode.

A plot of readout voltage (the measure of current consumed) versus control potential is shown in Figure 1 for the electrolysis of 5 mg Pu and 1 mg of Fe. Data for this type of plot is obtained by making an

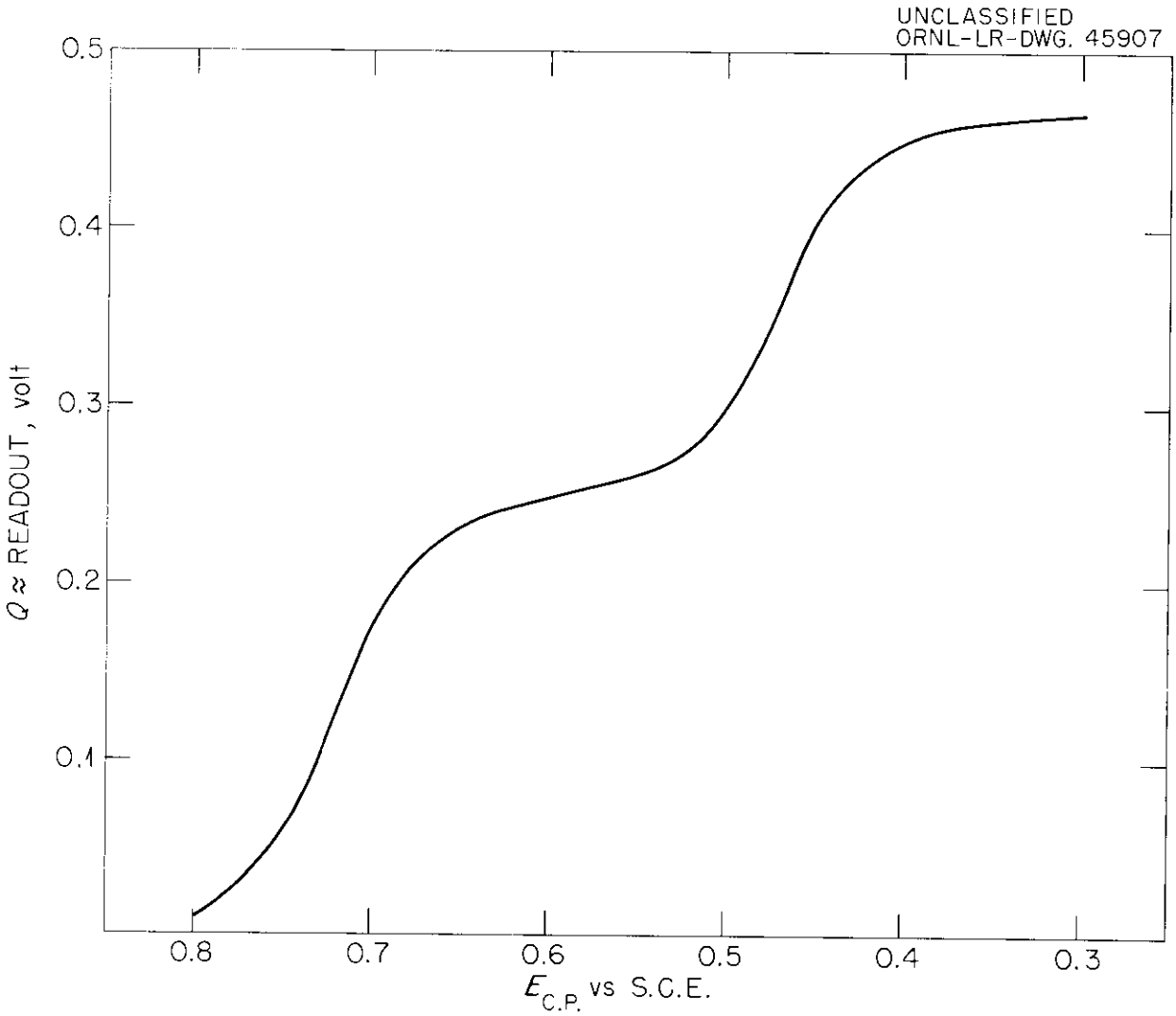

Fig. 1. Coulogram Obtained by Successive Reduction of 5.119 mg Pu(IV) and 1.00 mg Fe(III) in 1 M $HClO_4$-0.02 M NH_2SO_3H.

electrolysis in normal fashion except that periodically throughout the electrolysis the control potential is adjusted to a value that causes current flow to stop. At that time, the readout voltage, Q, and corresponding control potential, E_{CP}, are noted and the titration is resumed. A series of these points is taken and when plotted constitute a curve (conveniently called a coulogram) which is similar in shape to a polarogram. The information obtained from this type of relationship is especially pertinent because the data are obtained under the same conditions which exist during the titrations themselves. Furthermore, if a known amount of a substance or substances is electrolyzed, the data make it possible to plot the relationship between log (% Ox/% Re) versus control potential. Figure 2 shows two such curves, one for electrolysis of 5.119 mg Pu and one for electrolysis of 1.00 mg Fe in 15 mls of 1 M $HClO_4$ containing 0.02 M NH_2SO_3H. This type of plot enables one to precisely choose optimum potentials for the desired reaction.

The coulogram in Figure 1 indicates that the redox potentials for the Pu(III) $\rightleftarrows$ Pu(IV) and for the Fe(II) $\rightleftarrows$ Fe(III) couples are separated by 250 mv or so in that electrolyte. Theoretically, a separation of 360 mv (E^{o} ± 180 mv) would be required for complete reduction of plutonium without any iron reduction since both reactions involve a one-electron change. In practice, however, we have found that E^{o} ± 160 mv is a sufficient control potential span for complete reaction. Potentials

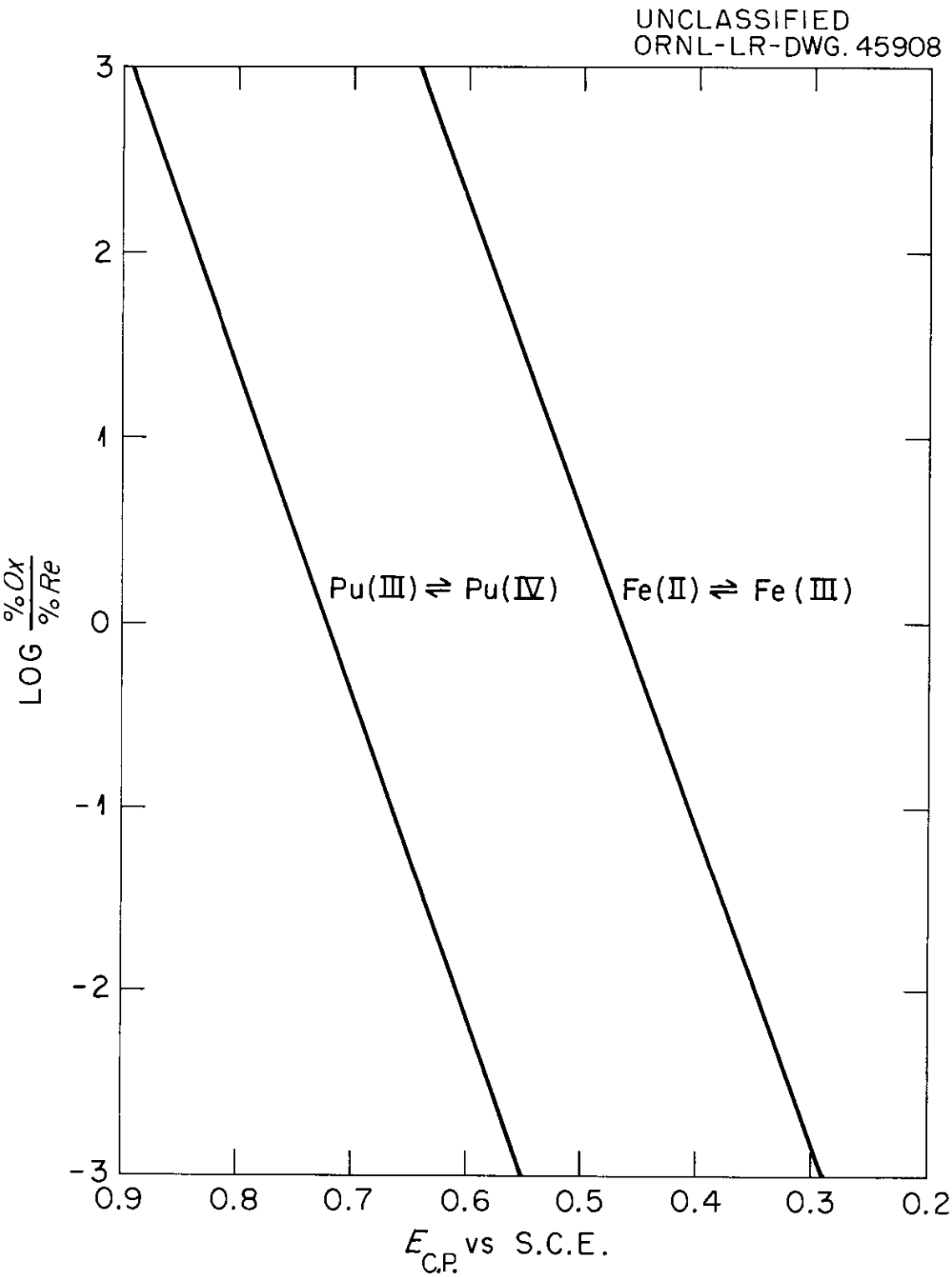

Fig. 2. Relationships Between Control Potential and log $\frac{\%\ Ox}{\%\ Re}$ for 5.119 mg Pu and for 1.00 mg Fe.

for the reduction and oxidation of quantities of plutonium in the 5 mg range were chosen therefore at +0.560 volt and +0.880 volt vs. S.C.E. respectively. The curves in Figure 2 show that at +0.560 volt only about 1% of the iron present is reduced. Since the iron present in PRFR samples is 100 μg or less per ml, titration of 1% of this amount would cause an error of <0.1% in the plutonium result if a sample aliquot of 1 ml was taken for analysis. The procedure actually is designed so that 100 μl aliquots are taken; the presence of iron in this type of sample would therefore not become noticeable unless its concentration in the original sample rose to ~1 mg/ml. The error would be less than 0.5% if the iron concentration was as high as 2.5 mg/ml in the original sample. The data in Table I show the effect various amounts of iron upon the titration results and substantiate the above comments.

The reduction potential of uranium in this electrolyte is approximately -0.15 volt vs. S.C.E. Uranium therefore would not be expected to interfere directly in the plutonium titration. The data in Table II verify this expectation. Extremely large quantities of uranium, say 300 mg, do tend to slow the titration slightly, but do not appreciably affect the results.

PRFR samples frequently contain trace amounts of reducing impurities ($NH_2OH \cdot 1/2H_2SO_4$) which must be removed or destroyed prior to titration of the plutonium. This is conveniently done by warming the sample

Table I

Effect of Various Amounts of Iron Upon Titration Results

Fe Present in Cell, μg	mg Pu Found	% Error
0	5.244	-----
125	5.230	+ 0.1
250	5.242	+ 0.4
375	5.289	+ 1.3
500	5.423	+ 4.0
1000	5.425	+ 4.0

Table II

Effect of Various Amounts of Uranium Upon Titration Results

mg U Present in Cell	mg Pu Found	% Error
0	5.224	0
30	5.224	0
300	5.234	+ 0.2

aliquot with a small amount of HNO_3 in the titration cell on a hot plate for about one minute or until the blue color of Pu(III) disappears. The sample is ready to be titrated after addition of the electrolyte solution.

Product solutions contain 0.25 M sulfamic acid and occasionally may contain traces of sulfuric acid. Consequently, the effect of sulfate concentration upon the titration results was investigated and the results are tabulated in Table III. The sensitivity of the method to sulfate concentration is not surprising in view of the strong complexing action of the sulfate ion upon Pu(IV). The coulogram in Figure 3 shows that the redox potential of plutonium in M H_2SO_4 is shifted to such an extent that no differentiation between plutonium and iron is possible. Consequently, it is desirable to maintain the sulfate ion concentration as low as possible, at least below 0.007 M in the electrolyte solution.

Figure 3 also presents coulograms when Pu(IV) and Fe(III) are reduced in M HNO_3 and M HCl. Either of these solutions may be used as supporting electrolyte. Molar perchloric acid was found to be preferable for routine use, primarily because the platinum electrode functions best in this electrolyte, requiring little or no care, and also because small background currents are obtained with no necessity for blank corrections. A gradual increase in background current and titration time was noted when M HCl was used routinely as the supporting electrolyte.

Table III

Effect of Sulfate Concentration Upon Titration Results

M H_2SO_4 in Sample	M H_2SO_4 in Cell; 100 µl Aliquot	Reduction Time, min.	% Error
0.0	0.0	10	0
0.1	0.0007	10	0
0.5	0.004	11	+ 0.2
1.0	0.007	12	- 0.3
2.5	0.02	16	- 3.7
6.0	0.04	25	-11.5
18.0	0.12	45	-41.8

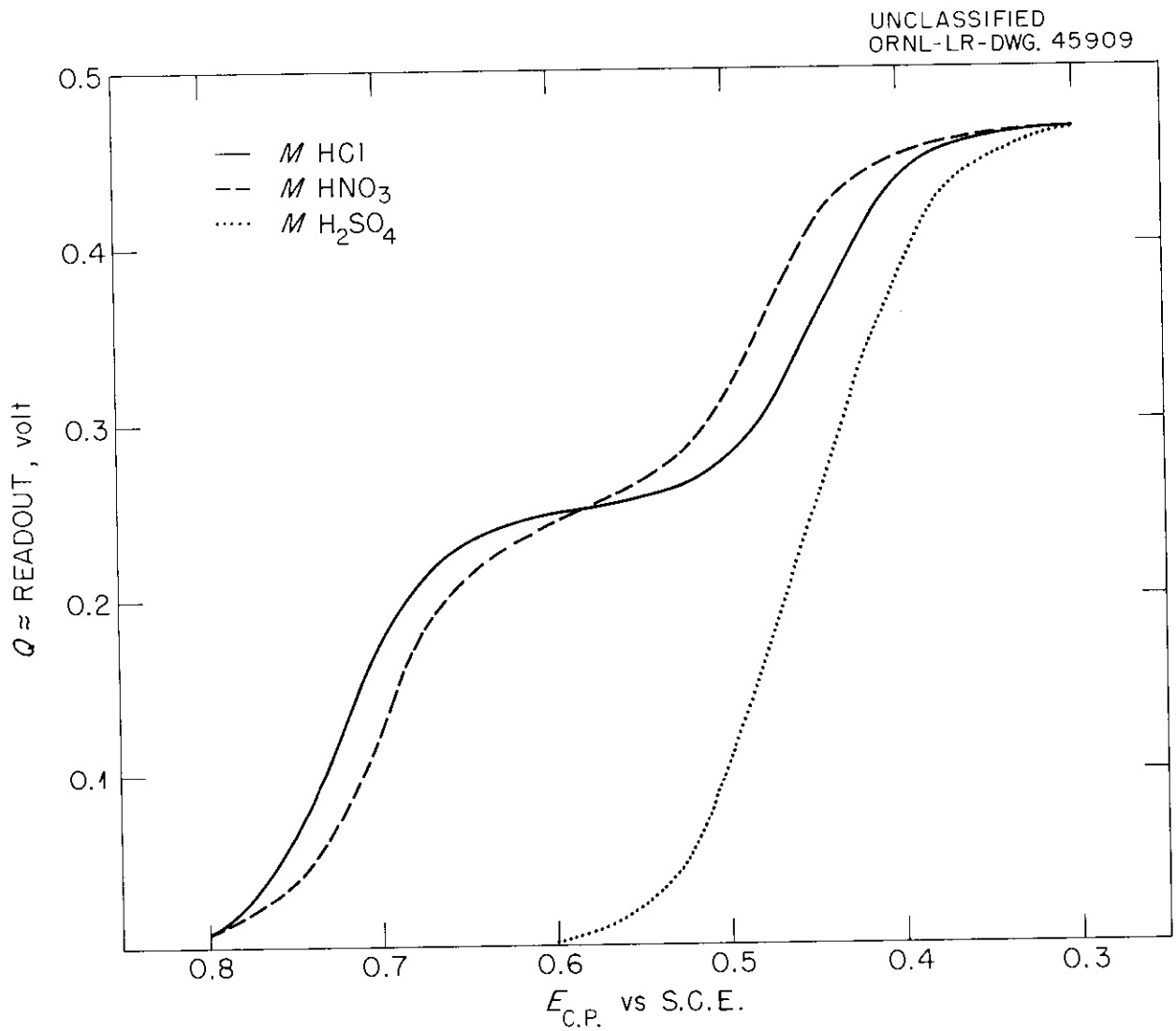

Fig. 3. Coulograms Obtained by Successive Reduction of 5.119 mg Pu(IV) and 1.00 mg Fe(III) in 1 M HCl, 1 M HNO_3, and 1 M H_2SO_4.

Perchloric acid also proved advantageous in special instances when it was necessary to fume off potential interferences such as the fluoride ion or to destroy organic material prior to titration of plutonium. When this is done however, the reduction time is extended considerably because plutonium is oxidized to PuO_2^{++} by fuming perchloric acid and the electrolytic reduction of PuO_2^{++} to Pu(III) is very slow, requiring approximately 45 minutes under the present conditions.

Some studies were made to determine if this reduction, PuO_2^{++} to Pu(III), could be made the basis for a controlled-potential coulometric titration. Such a procedure would afford increased sensitivity since the reaction would involve a three electron change. Coulograms for the direct reduction of ~5 mg of plutonium as PuO_2^{++} in several electrolytes are presented in Figure 4. This reaction most probably proceeds through the PuO_2^{+} valence which disproportionates, the net result being conversion of PuO_2^{++} to Pu(III). The $PuO_2^{+} \rightarrow$ Pu(IV) reaction would be expected to proceed slowly since it involves rupture of plutonium-oxygen bonds. Accordingly, the coulogram of this reduction in $HClO_4$ shows a pronounced vertical portion beginning at about 1/3 completion which is attributable to the PuO_2^{+} valence and then a gradual but slowing shift in control potential as the equilibrium shifts towards Pu(IV), Pu(III). The disproportionation reaction would be expected to slow as the PuO_2^{+} concentration decreased. In any event, this reaction was not pursued

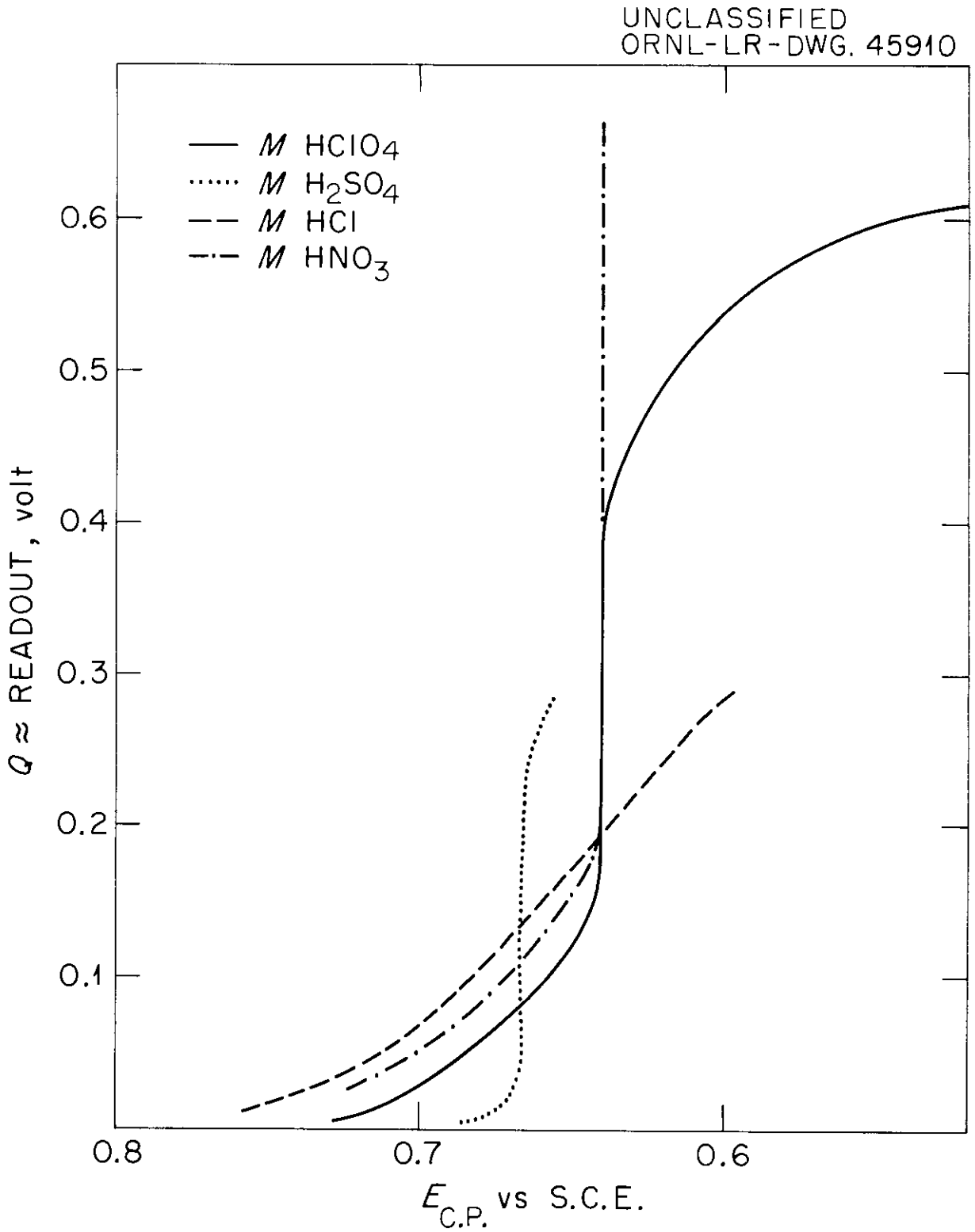

Fig. 4. Coulograms for Direct Electrolytic Reduction of 5.2 mg Pu as PuO_2^{++} in Several Electrolytes.

because it proceeds too slowly to be of use as the basis of a controlled potential coulometric titration.

Scott and Peekema[7] reported their first titration of each day to give consistently low results. Similar behavior, an error of -0.6%, was noted in the present study. It appears to be due to migration of plutonium ions into the counter-electrode compartment during electrolysis, but similar behavior was observed when various bridges to the counter-electrode compartment were used. It is interesting to note that this behavior is not observed when ions other than plutonium are titrated in the same titration vessel. In any event, the behavior can be eliminated simply by leaving the last sample of each day in the cell overnight. It is advisable to titrate solutions of approximately equal plutonium concentration in the same cell.

Scott and Peekema[7] also reported that certain empirical corrections were necessary due to "spray" losses of electrolyte solution. The present procedure does not require degassing. Only a slight loss in precision is observed if the helium blanket is omitted entirely so that an inert gas atmosphere is used only when the utmost precision is desired.

A second procedure has been developed for the determination of plutonium in samples which contain as much as 1:1 weight ratio of iron to plutonium. A report concerning that procedure will be issued when it has been thoroughly evaluated.

5. Experimental and Procedure

5.1 Instrument

An ORNL Model Q-2005 Automatic Electronic Controlled Potential Coulometric Titrator[3,4] was modified by H. C. Jones of the Analytical Instrumentation Group in order to meet the requirements of this procedure. These modifications were described by Kelley, Jones, and Fisher.[5]

Because of the high equivalent weight of plutonium it was necessary to increase the sensitivity of the integrator. A two-position sensitivity switch was installed in the integrator input lead and the 10 ohm shunt resistor in that lead was increased to 50 ohms. This resistance, plus the 400-kilohm integrator input resistance normally used, afforded a five fold increase in sensitivity. This "Low Sensitivity" position is suitable for titration of 2 to 20 mg of plutonium. A fifty-fold increase in sensitivity, the "High Sensitivity" position, is gained by switching in a 40-kilohm integrator input resistor in place of the 400-kilohm resistor. This range is suitable for titration of 0.2 to 2 mg of plutonium.

A more precise method for integrator bias adjustment was required at these sensitivities to minimize integrator drift (gain or loss in voltage with time when no electrolysis current is flowing). This was accomplished by moving the three-turn "Bias Adjust" potentiometer to the front of the instrument and by increasing the "X5 Readout Integral"

position to "X100," i.e., the full output of the integrator amplifier. In practice, then, the "Bias Adjust" potentiometer is adjusted twice daily to bring the full output of the integrator amplifier to zero change while the "Readout Integral" is in the "X100" position and the "Titrate" switch is in the "Off" position. A block diagram of the instrument showing these changes is given in Figure 5. These latter changes were suggested by Scott, Stromatt, and Connally.[6]

Finally, a 2-kilohm resistor was placed in the counter-electrode lead in order to limit the initial current to approximately 25 ma, thereby maintaining a satisfactory current density. Higher current densities were found to cause erratic results.

5.2 Titration Assembly

The titration assembly consists of the titration cell, its support, and an 1800 rpm Bodine motor all mounted on a single small (18 in.) ringstand. The cell assembly is diagrammed in Figure 6. It is a 50 ml lipless Pyrex beaker resting in an inverted reagent bottle cap which is supported by a clamp. The cell is topped by a Teflon cap which was machined to accept the beaker as well as support the other components of the cell. Two Vycor tubes, 5 1/2 in. by 1/4 in., with unfired bottom of No. 7930 glass are used as salt bridges. Each contains 1 M HNO_3 solution which is replaced daily. A Beckman No. 270, 4970-29 fiber type saturated calomel reference electrode is placed in one Vycor

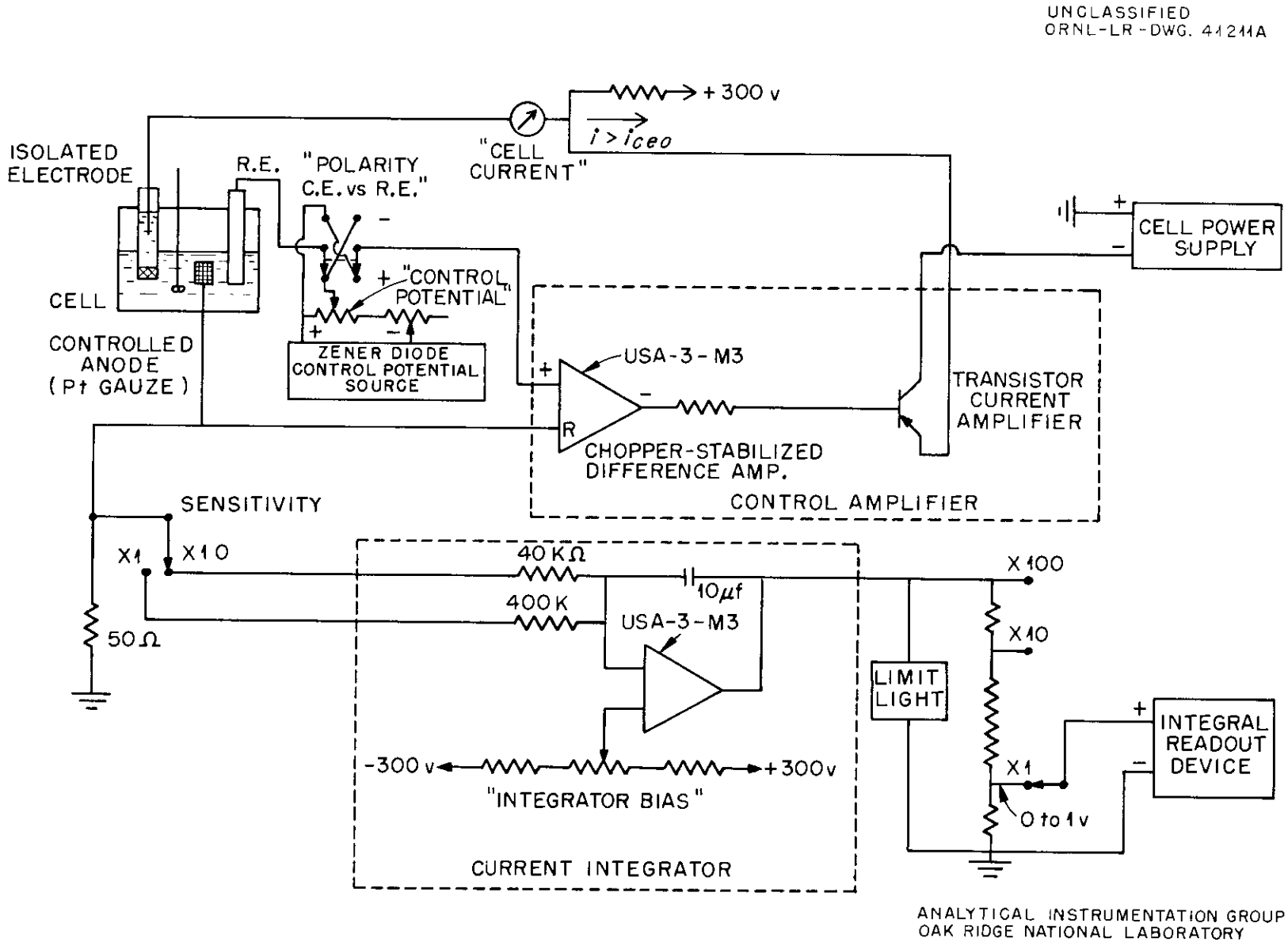

Fig. 5. Block Diagram of Modified Electronic Controlled-Potential Coulometric Titrator.

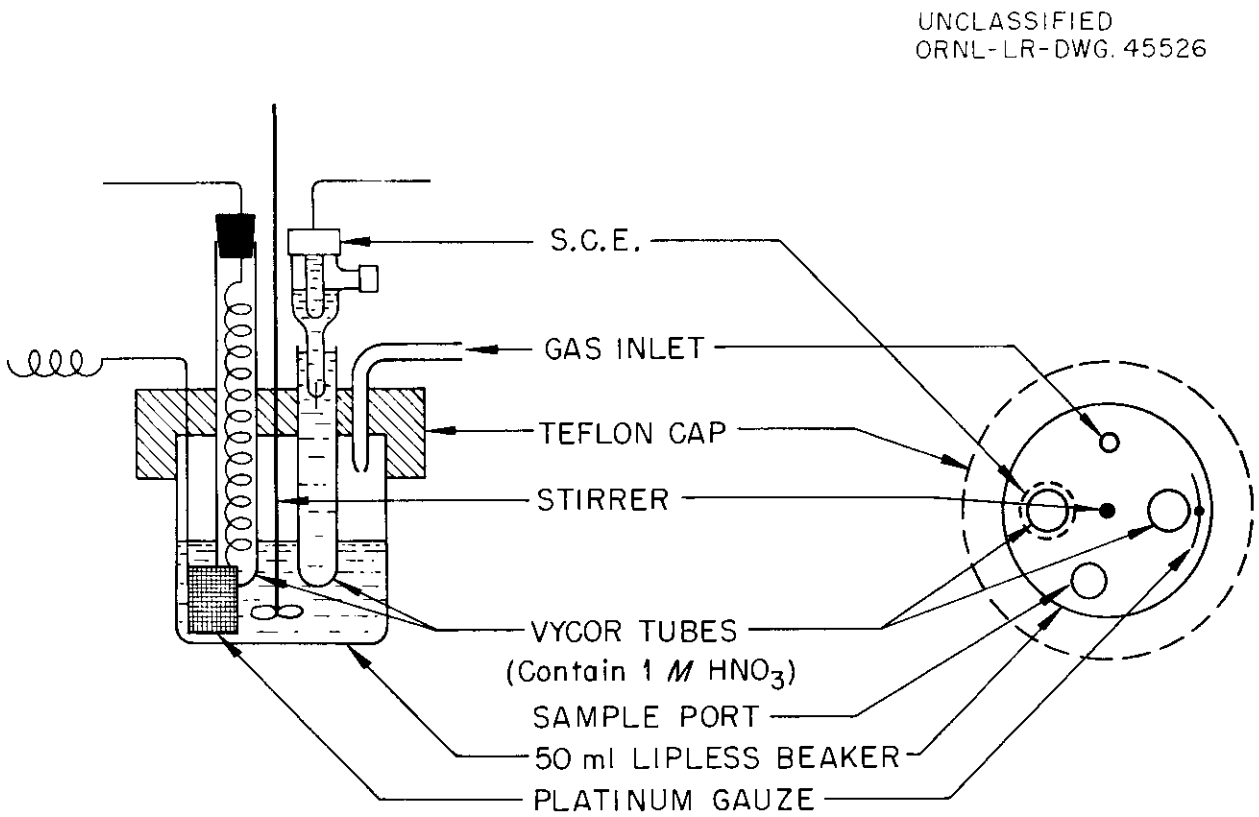

Fig. 6. Diagram of Titration Vessel.

tube and a 16 gauge coiled platinum wire counter electrode is placed in the second Vycor tube. The working electrode is a 1 1/2 x 4 cm piece of platinum gauze, 45 mesh, to which a 6 inch piece of 16 gauge platinum wire was welded. The electrode is supported by the wire which fits into a small slit in the Teflon cap; the slit is closed by a small Teflon wedge. A small gas inlet tube, a sample entry port, and a small glass propeller-type stirrer complete the cell assembly. Initial currents of 25-30 ma and titration times of approximately 10 minutes per electrolysis are obtained with this cell assembly.

5.3 Reagents

The plutonium solutions used in this study were prepared from two samples of plutonium metal which were obtained from the Los Alamos Scientific Laboratory. A known weight of the pure metal was dissolved in and diluted to volume with 6 M HCl. One solution was prepared to contain 10.027 ± 0.2% mg Pu/ml. A second solution was prepared to contain 25.593 ± 0.07% mg Pu/ml. The molecular weight of plutonium in these solutions was 239.07 g/mole.

Tank type helium gas is used to provide an air free atmosphere over the electrolyte solution when desired.

All other reagents were Analytical Reagent grade.

5.4 Procedure

Instructions as to the calibration and use of the ORNL Q-2005 Coulometric Titrator are available.[3]

A. Sample Preparation

(1.) Pipet a sample aliquot estimated to contain 5 mg of plutonium into the titration cell.

(2.) Add 2 drops of concentrated HNO_3 and warm on a hot plate for one minute or until disappearance of the blue color of Pu(III).

(3.) Add 15 ml of 1 M $HClO_4$ and 5 drops of saturated NH_2SO_3H solution.

B. Titration of Sample Aliquot

(1.) Position cell; start stirrer; start helium overflow.

(2.) Make a reduction at +0.560 volt vs. S.C.E. until the current decreases to 30 μa.

(3.) Stop electrolysis and zero the integrator.

(4.) Oxidize Pu(III) to Pu(IV) at +0.880 volt vs. S.C.E. until the current again decreases to 30 μa.

(5.) Read and record the readout voltage, Q, volt.

(6.) Calculate the mg of Pu oxidized from the readout voltage and the plutonium factor as determined by prior electrical calibration. In the present case, the factor is 20.28 mg Pu per readout volt on the "Low Sensitivity" range, so that mg Pu = 20.28 Q.

6. Results

Table IV summarizes the precision data that were obtained when various quantities of standard plutonium chloride solution were titrated ten times without prior chemical treatment. No bias was detectable in the results of these titrations. A standard solution containing 25.593 ± 0.07% mg Pu/ml was analyzed by coulometric and potentiometric titration with the following results: 25.57 mg Pu/ml by potentiometric titration (average of eight analyses) and 25.58 mg Pu/ml by coulometric titration (average of five analyses).

Table V is a tabulation of the results of ten analyses on a single PRFR sample as run by the procedure given above. For comparison the results of both reduction and oxidation electrolyses are given. The slightly higher answers obtained by reduction are attributable to the formation of a small amount of Pu(VI) during chemical pretreatment of the sample aliquot.

Of greater interest are the results obtained under routine operating conditions. A standard plutonium chloride solution was analyzed periodically over a period of approximately three months by the ceric sulfate potentiometric titration method[2] and by the present method. Table VI summarizes these data.

7. Conclusions

The determination of plutonium by controlled-potential coulometric titration has been studied in order to apply it to the analysis of PRFR

Table IV

Precision Data Obtained by Titration of Standard Plutonium Solutions

~ mg Pu Titrated	Relative Standard Deviation, %
10	0.07
1	0.1
0.25	0.3
0.05	1.5

Table V

Results of Repeated Analysis of a Single PRFR Sample for Plutonium

By Reduction, mg/ml		By Oxidation, mg/ml
51.065		50.923
51.085		50.903
51.187		51.004
51.187		51.045
51.085		50.923
51.146		50.964
51.187		50.984
51.085		50.984
51.065		50.883
51.085		50.923
51.118	← Average →	50.954
0.10%	← Rel. Std. Dev. →	0.10%

Table VI

Comparison of Potentiometric and Coulometric Methods
Under Routine Operating Conditions

(Standard Pu Solution = 10.027 mg Pu/ml ±0.2%.)

Method	Number of Determinations	Average, mg Pu/ml	Relative Standard Deviation, %
Potentiometric	24	10.058	0.68
Coulometric	37	10.027	0.27

pilot plant samples. Conditions were established for the routine use of this method and the effect of potential interfering substances was examined. The performance of the method was then evaluated under ideal and actual operating conditions. The method has proven to be very precise, free of interference from the contaminants normally present in PRFR samples, and considerably faster than the potentiometric method now used for this application.

8. Acknowledgements

Appreciation is expressed to H. C. Jones who made the modifications in the coulometric titrator and to J. H. Cooper and his staff, particularly C. J. Coley, for their assistance and for freely making their laboratory facilities available during the course of this work.

9. References

1. W. N. Carson, Jr., J. W. Vanderwater, and H. S. Gile, Anal. Chem. 29, 1417 (1957).

2. J. H. Cooper, "Plutonium, Potentiometric Ceric Sulfate Method," Method No. 9 0432620 (8-7-53), ORNL Master Analytical Manual; TID-7015, Sec. 9.

3. H. C. Jones, "Automatic Coulometric Titrator, ORNL Model Q-2005, Electronic, Controlled-Potential," Method Nos. 1 003029 and 9 003029 (8-17-59), ORNL Master Analytical Manual; TID-7015, Sec. 1.

4. M. T. Kelley, H. C. Jones, and D. J. Fisher, Anal. Chem. 31, 488, 956 (1959).

5. M. T. Kelley, H. C. Jones, and D. J. Fisher, "Electronic Controlled-Potential Coulometric Titrator for Plutonium Analysis," Third Conference on Analytical Chemistry in Nuclear Reactor Technology, Gatlinburg, Tennessee, Oct. 26—29, 1959.

6. F. A. Scott, R. W. Stromatt, and R. E. Connally, private communication.

7. F. A. Scott and R. M. Peekema, "Analysis for Plutonium by Controlled-Potential Coulometry," A/CONF. 15/p/914, USA, June 1958.

8. F. A. Scott and R. M. Peekema, "The Determination of Plutonium in Irradiated Uranium Fuel Solutions by Controlled Potential Coulometry," HW-58491, Dec. 10, 1958.

ORNL-2921
UC-4 - Chemistry-General
TID-4500 (15th ed.)

INTERNAL DISTRIBUTION

1. C. E. Center
2. Biology Library
3. Health Physics Library
4-5. Central Research Library
6. Reactor Experimental Engineering Library
7-26. Laboratory Records Department
27. Laboratory Records, ORNL R.C.
28. A. M. Weinberg
29. L. B. Emlet (K-25)
30. J. P. Murray (Y-12)
31. J. A. Swartout
32. E. H. Taylor
33. E. D. Shipley
34. M. L. Nelson
35. M. T. Kelley
36. C. P. Keim
37. W. H. Jordan
38. F. L. Culler
39. A. H. Snell
40. S. C. Lind
41. A. Hollaender
42. K. Z. Morgan
43. T. A. Lincoln
44. A. S. Householder
45. R. S. Livingston
46. D. S. Billington
47. C. E. Winters
48. H. E. Seagren
49. W. D. Shults
50. J. A. Lane
51. M. J. Skinner
52. J. M. Schreyer
53. G. E. Boyd
54. C. L. Burros
55. J. H. Cooper
56. L. T. Corbin
57. C. Feldman
58. D. J. Fisher
59. U. Koskela
60. W. R. Laing
61. C. E. Lamb
62. D. E. LaValle
63. G. W. Leddicotte
64. S. A. Reynolds
65. P. F. Thomason
66. T. E. Willmarth
67. G. R. Wilson
68. E. I. Wyatt
69. L. J. Brady
70. H. P. House
71. J. R. Lund
72. E. C. Lynn
73. O. Menis
74. A. S. Meyer, Jr.
75. C. D. Susano
76. C. K. Talbott
77. W. F. Vaughan
78. J. C. White
79. H. P. Raaen
80. J. A. Norris
81. D. L. Manning
82. T. C. Rains
83. A. E. Cameron
84. N. H. Furman (consultant)
85. D. N. Hume (consultant)
86. H. A. Laitinen (consultant)
87. C. E. Larson (consultant)
88. W. W. Meinke (consultant)
89. L. L. Merritt (consultant)
90. ORNL - Y-12 Technical Library, Document Reference Section

EXTERNAL DISTRIBUTION

91. R. H. Roberts, Dow Chemical Company, Denver, Colorado
92. Eugene Graf, Savannah River Project, Aiken, South Carolina
93. Division of Research and Development, AEC, ORO

94-650. Given distribution as shown in TID-4500 (15th ed.) under Chemistry-General category (75 copies - OTS)