204

MARTIN MARIETTA ENERGY SYSTEMS LIBRARIES
3 4456 0361489 0

CENTRAL RESEARCH LIBRARY
DOCUMENT COLLECTION

ORNL-2936
UC-81 - Reactors-Power

[redacted]

ASSEMBLY OF FIFTY PROTOTYPE FUEL ELEMENTS FOR THE EXPERIMENTAL GAS-COOLED REACTOR

E. A. Wick
R. L. Heestand

CENTRAL RESEARCH LIBRARY
DOCUMENT COLLECTION
LIBRARY LOAN COPY
DO NOT TRANSFER TO ANOTHER PERSON
If you wish someone else to see this document, send in name with document and the library will arrange a loan.

OAK RIDGE NATIONAL LABORATORY
operated by
UNION CARBIDE CORPORATION
for the
U.S. ATOMIC ENERGY COMMISSION

LEGAL NOTICE

This report was prepared as an account of Government sponsored work. Neither the United States, nor the Commission, nor any person acting on behalf of the Commission:

A. Makes any warranty or representation, expressed or implied, with respect to the accuracy, completeness, or usefulness of the information contained in this report, or that the use of any information, apparatus, method, or process disclosed in this report may not infringe privately owned rights; or

B. Assumes any liabilities with respect to the use of, or for damages resulting from the use of any information, apparatus, method, or process disclosed in this report.

As used in the above, "person acting on behalf of the Commission" includes any employee or contractor of the Commission, or employee of such contractor, to the extent that such employee or contractor of the Commission, or employee of such contractor prepares, disseminates, or provides access to, any information pursuant to his employment or contract with the Commission, or his employment with such contractor.

ORNL-2936

Contract No. W-7405-eng-26

METALLURGY DIVISION

ASSEMBLY OF FIFTY PROTOTYPE FUEL ELEMENTS FOR THE EXPERIMENTAL GAS-COOLED REACTOR

E. A. Wick

R. L. Heestand

DATE ISSUED

DEC 12 1960

OAK RIDGE NATIONAL LABORATORY
Oak Ridge, Tennessee
Operated by
UNION CARBIDE CORPORATION
for the
U. S. ATOMIC ENERGY COMMISSION

MARTIN MARIETTA ENERGY SYSTEMS LIBRARIES

3 4456 0361489 0

CONTENTS

ABSTRACT 1
INTRODUCTION 1
Description of Reactor 1
Description of Fuel Assembly 2
Purpose of Investigation 2
RESULTS AND CONCLUSIONS 3
COMPONENT PROCUREMENT 4
Tubing for Fuel Elements 6
Mock Fuel Pellets 7
Top and Bottom End Caps 7
Mid-Plane Spacers 8
Top and Bottom Spiders 8
Graphite Support Sleeves 9
Magnesium Oxide Pellets 10
FABRICATION 10
Assembly of Fuel Elements 10
Assembly of Fuel Assembly 27
Man-Hour Estimates 29
ACKNOWLEDGMENT 35
APPENDIX A, EGCR Fuel Element Specifications 37
APPENDIX B, Allis-Chalmers Drawings 59
APPENDIX C, Recommended Changes in Specifications 77
APPENDIX D, Process Specifications 81

ASSEMBLY OF FIFTY PROTOTYPE FUEL ASSEMBLIES FOR THE EXPERIMENTAL GAS-COOLED REACTOR

E. A. Wick[1]

R. L. Heestand

ABSTRACT

The fuel assembly for the Experimental Gas-Cooled Reactor consists of a cluster of seven fuel elements supported in a graphite sleeve. Following the early design work, certain problems associated with procurement and assembly of the components remained to be identified and resolved. Sufficient components for fifty fuel assemblies of the Title I design were procured commercially in accordance with detailed specifications, and were assembled in a pilot plant operation. All components and completed assemblies were inspected carefully. The fabricability of the design was confirmed, and several important modifications in the specifications and design were developed. Reliable cost estimates also were obtained on sufficient components for a reactor loading. In addition, process specifications were developed for the welding and brazing operations.

INTRODUCTION

Description of Reactor

The Experimental Gas-Cooled Reactor[2] (EGCR) is a combined experimental and power demonstration reactor now under construction at Oak Ridge, Tennessee, and scheduled for operation in late 1962. It is fueled with enriched uranium dioxide clad in stainless steel, moderated with graphite, and cooled with helium. The plant is designed to produce 84.3 Mw(T) and 22 Mw(E) net power, with a coolant outlet temperature of 1050°F.

---

[1]Allis-Chalmers Manufacturing Company, Nuclear Power Department, Washington, D. C.

[2]Experimental Gas-Cooled Reactor, Preliminary Hazards Report, ORO 196 (May, 1959).

The reactor portion of the plant consists of a pressure vessel that contains a temperature barrier, a graphite core, fuel assemblies, and control rods. The reactor power of 84.3 Mw(T) is extracted by a helium flow of 427 000 lb/hr at 315 psia. The coolant enters the reactor at 510°F and exits at 1050°F.

The core is a vertical cylinder constructed of monolithic columns of graphite. Vertical channels are provided through the graphite for the fuel assemblies, control rods, experimental loops, and flux plotters.

Description of Fuel Assembly

The EGCR fuel assembly[3] consists of seven fuel elements, a graphite support sleeve, and top and bottom spiders that support the fuel elements in the graphite sleeve. Six fuel assemblies are positioned vertically in each of 216 fuel channels in the reactor; thus, 1296 fuel assemblies comprise a reactor loading.[4]

A fuel element consists of a column of uranium dioxide pellets encased in stainless steel tubing fitted with top and bottom end caps. The uranium dioxide pellets are separated from each end cap by a magnesium oxide pellet. The top and bottom end caps are joined to the tubing by closure welds; the final closure weld is performed so as to maintain an internal environment of helium in the fuel element. A spacer is brazed around the outer circumference of each fuel element at the axial midpoint to minimize distortion and thereby maintain adequate spacing for coolant flow.

Purpose of Investigation

As the design progressed beyond the conceptual stage, it became apparent that pilot fabrication should be performed. In this manner the problems involved in procuring components and fabricating the fuel assemblies could be

[3] J. K. Davidson, R. S. Miller, H. L. Sturza, and E. A. Wick, Study No. 100, Fuel Assembly for the Experimental Gas-Cooled Reactor, Allis-Chalmers Manufacturing Company, Contract AT(10-1)-925 (Aug. 12, 1959).

[4] "Fuel Assembly General Arrangement," Allis-Chalmers Dwg: SK-MS-15, Appendix B of this report.

identified and resolved. One of the major uncertainties in the design was the feasibility of fitting the bottom spider to the fuel elements while the elements were inside the graphite support sleeve. It was felt that this method of assembly might be awkward and time consuming.

A second area of uncertainty was the amount of distortion that would take place in the top and bottom spiders as a result of joining the spiders to the fuel elements by welding. Distortion of the spider during welding could result in improper fuel-element spacing, which in turn would lead to hot spots caused by improper distribution of the coolant flow.

A third unknown was the adequacy of the component tolerances to maintain the required spacing of the fuel elements with respect to each other and to the graphite sleeve. The Title I design requires that the fuel-element spacing be maintained to within ± 0.010 in. of the nominal dimension; however, to provide greater economy, the components are dimensioned so that the most unfavorable accumulation of tolerances could lead to a deviation of approx 0.040 in. from nominal. The wider tolerances were used because it was felt highly unlikely that tolerances would accumulate in the most unfavorable manner; thus, the cost savings should more than offset the cost of rejected assemblies.

Finally, specifications and cost data had to be developed prior to procurement of fuel assemblies for the first core loading. This involved a knowledge of manufacturing procedures and process specifications. These data could best be developed during pilot fabrication of the fuel assemblies.

Therefore, a pilot fabrication program was conducted in which 50 fuel assemblies of the Title I design were assembled and inspected. All components, with the exception of fuel pellets, were procured commercially in accordance with detailed product specifications. Solid steel cylinders were used to simulate the UO_2 fuel pellets in these assemblies.

RESULTS AND CONCLUSIONS

1. The fifty fuel assemblies were fabricated without difficulty. Of these, twenty-five were fabricated by the Metallurgy Division Welding and Brazing Laboratory and twenty-five were assembled under shop conditions by

the Engineering and Mechanical Division Specialty Shop. The bottom spider was readily installed while the fuel elements were positioned inside the graphite sleeve.

2. No warpage of the spiders was experienced during assembly. The fuel element-to-spider welds were made without using chill blocks.

3. The minimum spacing between fuel elements and between the outer fuel elements and the graphite sleeve was maintained within 0.010 in. of the specified nominal spacing; this spacing was measured with the fuel assembly in the vertical position.

4. Maximum side motion of the top and bottom spiders within the graphite support sleeve was approx 0.015 in.

5. It is recommended, on the basis of the seller's experience, that the dimensional tolerances on the tubing length and the ring diameter of the top spider be relaxed. Other recommended changes are listed in Appendix C.

6. Approximately one-half man-hour of effort was required to assemble each fuel assembly. This included welding the seven fuel elements to the top spider, positioning the elements inside the graphite sleeve, and then welding on the bottom spider. It is estimated that by optimizing in production, only one-quarter man-hour will be required to assemble each fuel assembly.

7. The total effort for each fuel assembly is estimated at approximately two man-hours. This includes fabrication and inspection of the seven fuel elements plus fabrication and inspection of the finished fuel assembly.

8. The estimated cost of the components required to manufacture a reactor loading of 1296 assemblies is $482 000. The cost of conversion of UF_6 to UO_2 and fabrication of fuel pellets are included in this estimate, but the cost of assembling the components is not. The costs of the various items are presented in Table 1.

9. Suggested manufacturing procedures and process specifications were developed and are included in Appendix D.

COMPONENT PROCUREMENT

Fixed-price bids were requested from industry and the purchase contract for each component was awarded on the bases of price and delivery. Some firms

Table 1. Cost of Fuel Assembly Components[a]

Item	Quantity	Unit Price ($)	Total Cost ($)
Type 304 Stainless Steel Tubing	22 000 ft	2.30/ft	50 600
Top End Caps	9 250	0.59 ea	5 458
Bottom End Caps	9 250	0.59 ea	5 458
Conversion UF_6 to UO_2	28 159 lb UO_2	6.00/lb UO_2[b]	168 954
Pellet Fabrication	28 159 lb UO_2	5.00/lb UO_2[b]	140 795
Top Spiders	1 325	14.90 ea	19 725
Bottom Spiders	1 325	16.34 ea	21 650
Helical Spacers	9 250	1.66 ea	15 370
MgO Pellets	18 500	0.15 ea	2 775
Graphite Support Sleeves	1 300	39.27 ea	51 000
			481 785

[a]Quotations were firm at time submitted and were based upon quantities sufficient to comprise a reactor loading.

[b]Based upon informal discussions with one potential seller.

were unable to submit a bid because the requested delivery schedule of 5 to 6 weeks could not be met. Firm quotations also were requested for reactor quantities of components with the exception of UO_2 pellets. The low bid for each component is presented in Table 1. The estimated cost of the UO_2 pellets was based upon discussions with a potential seller. The total cost for components including UO_2 pellets is estimated at $482 000.

Tubing for Fuel Elements[5,6]

Type 304 stainless steel seamless tubing, 3/4-in. nominal outside diameter and 0.020-in. wall (conforming to a modified version of ASTM Designation: A 269) was used. The tubing was purchased to a specified inside diameter of $0.710 \begin{smallmatrix} +0.002 \\ -0.000 \end{smallmatrix}$ in. and to a commercial wall-thickness tolerance of ± 10%. The tubing was furnished in cut lengths of $27.500 \begin{smallmatrix} +0.005 \\ -0.000 \end{smallmatrix}$ in. Straightness tolerance was 0.010 in./ft. The seller was required to perform boroscope inspection on redraw stock, air-gage inspection of the inside diameter, resonance ultrasonic inspection for wall-thickness variations, liquid penetrant inspection on the outside surface for defects, and eddy-current tests for discontinuities greater than 12-1/2% of wall thickness. The maximum boron content of the stainless steel was specified as 10 ppm.

The seller sustained high reject rates due to the tight tolerance of $\begin{smallmatrix} +0.005 \\ -0.000 \end{smallmatrix}$ in. in the length. Therefore, to avoid excessive cost in purchase of reactor quantities of tubing, it would be desirable to increase the length tolerance to $\begin{smallmatrix} +0.015 \\ -0.000 \end{smallmatrix}$ in. It appears that this can be done without sacrifice.

Two thirds of the tubing could not be successfully tested for discontinuities by the eddy-current technique either at the seller's plant or the Oak Ridge National Laboratory (ORNL) because of the high "noise"[7] levels observed during inspection. These noises obscured signals that would have indicated the

---

[5]"Specification for Type 304 Stainless Steel Tubing for Title I Fuel Elements for the Experimental Gas-Cooled Reactor," Spec. No. MS-1-1, Appendix A of this report.

[6]"EGCR-Fuel Element Sub-Assembly," Allis-Chalmers Dwg: SK-MS-1, Appendix B of this report.

[7]"Noise" is defined as a multiplicity of indications which are caused by properties of the tube material itself and not by a defective condition in the tube.

quality of the tubing. The remaining one third of the tubing was subjected to eddy-current testing by the seller prior to annealing and straightening and was reported to have been successfully tested and to have met specifications. However, when eddy-current tests were attempted at ORNL by the Nondestructive Testing Group of the Metallurgy Division, the noise level again prevented evaluation.[8] Pulse-echo ultrasonic examination was therefore performed as a check on this batch of tubing, and no defects in excess of 12-1/2% were detected.

The remaining inspection conducted at ORNL, which consisted of dimensional inspection, air-gage inspection of the inside diameter, resonance ultrasonics for wall thickness, and fluorescent dye-penetrant inspection, proved the tubing to be of excellent quality. The seller certified the boron content to be 4 ppm.

Mock Fuel Pellets[9]

Steel pellets were used to simulate UO_2 pellets. The pellets were solid but were purchased to the same diameter as that specified for the UO_2 pellets, that is, 0.707 ± 0.001 in.

Top and Bottom End Caps[10, 11, 12]

The top and bottom end caps were made of type 304 stainless steel with a maximum boron content of 10 ppm. Inspection requirements consisted of ultrasonic testing of the bar stock and dimensional and fluorescent dye-penetrant

---

[8] Eddy-current tests on tubing for the EGCR fuel elements will be performed by the seller and be witnessed by ORNL. Successful eddy-current tests shall be a firm requirement for acceptance.

[9] "Specification for Mock Fuel Pellets for Title I Fuel Elements for the Experimental Gas-Cooled Reactor," Spec. No. MS-1-6, Appendix A of this report.

[10] "Specification for Top and Bottom End Caps for Title I Fuel Elements for the Experimental Gas-Cooled Reactor," Spec. No. MS-1-5, Appendix A of this report.

[11] "EGCR-Fuel Assembly Top End Cap," Allis-Chalmers Dwg: SK-MS-5, Appendix B of this report.

[12] "EGCR-Fuel Assembly Bottom End Cap," Allis-Chalmers Dwg: SK-MS-6, Appendix B of this report.

inspection of the finished piece. The diameter of the end caps was dimensioned to provide a zero-to-0.003-in. interference fit with the tubing.

The end caps were machined from bar stock on screw machines from material having a certified boron content of less than 5 ppm. Delivery was satisfactory. Inspection at ORNL verified that the parts met the specification. Subsequent discussions with sellers revealed that revising the specification for surface finish from 32–63 rms would decrease the cost approx 50%.

Mid-Plane Spacers[13,14]

The machined spacers were made of type 304 stainless steel and consisted of six helical fins positioned on a collar. The fins have a pitch of 45 deg and are spaced 60 deg apart. Inspection requirements consisted of ultrasonic testing of the bar stock and dimensional and fluorescent dye-penetrant inspection of the finished part. The maximum boron content was specified as 10 ppm but was waived to expedite delivery.

Top and Bottom Spiders[15,16,17]

The top and bottom spiders are made of type 304 stainless steel and are used to position the fuel elements within the graphite sleeves. The spiders were manufactured by precision casting; the four positioning projections were machined and holes were drilled to accommodate the projections on the end caps of the fuel capsules. Fluorescent dye-penetrant and dimensional inspection of the spiders were specified.

---

[13] "Specification for Mid-Plane Spacers for Title I Fuel Elements for the Experimental Gas-Cooled Reactor," Spec. No. MS-1-2, Appendix A of this report.

[14] "EGCR-Fuel Assembly Helical Spacer," Allis-Chalmers Dwg: SK-MS-7, Appendix B of this report.

[15] "Specification for Top and Bottom Spiders for Title I Fuel Assemblies for the Experimental Gas-Cooled Reactor," Spec. No. M-1-4, Appendix A of this report.

[16] "EGCR-Fuel Assembly Top Spider," Allis-Chalmers Dwg: SK-MS-3, Appendix B of this report.

[17] "EGCR-Fuel Assembly Bottom Spider," Allis-Chalmers Dwg: SK-MS-4, Appendix B of this report.

The seller failed to meet scheduled delivery due to difficulty in holding the ring diameter of the top spider within the ± 0.015-in. tolerance and in holding the angular positioning of the seven truncated cones. Thus, when the holes were accurately located and drilled, the holes and cones were not concentric. This condition led to the truncated cone overhanging the fuel element after assembly and constricting the coolant flow area.

The difficulties experienced in casting may be alleviated by increasing the tolerances on the ring diameter (which can be achieved by increasing the diameter of the counterbore in the graphite sleeve) and by decreasing the major diameter of the truncated cone. Other recommended changes in the specification are presented in Appendix C.

On the basis of this experience, it is recommended that the prime fuel element contractor purchase the castings and handle the machining separately. Machining constituted approx 75% of the cost of spiders and was much higher than expected.

All the spiders were radiographed at ORNL. Minor amounts of porosity were detected but were not considered cause for rejection of any spiders. The boron content was certified to be less than 10 ppm.

Graphite Support Sleeves[18,19]

The graphite support sleeves were ordered from three manufacturers to avoid delays in competitive bidding. Two of the three sellers fabricated the 5-in.-o.d., 3-in.-i.d. sleeves from extruded rounds. The third seller manufactured the sleeves by cutting a large graphite block into quadrants and then machining a sleeve from each quadrant. This seller would also have normally manufactured the sleeves by extruding rounds slightly over 5-in. diam and then machining; however, the large blocks were in stock and were used in this instance to expedite delivery.

---

[18] "Specification for Graphite Support Sleeves for Title I Fuel Assemblies for the Experimental Gas-Cooled Reactor," Spec. No. M-1-3, Appendix A of this report.

[19] "EGCR-Fuel Assembly Graphite Support Sleeve," Allis-Chalmers Dwg: SK-MS-2, Appendix B of this report.

Dimensional inspection, weighing, eddy-current tests, and analyses for ash content were performed at ORNL. Dimensional inspection revealed that the slots at one end of the sleeve were out of alignment with slots at the other end by approx 0 deg, 30 min, whereas the alignment is specified to be within 0 deg, 15 min. This is not considered serious and tolerances should be relaxed to accommodate this discrepancy.

The eddy-current test for discontinuities revealed that most of the sleeves contained cracks or porous areas greater than 20% of the wall thickness. However, mechanical tests of the defective areas showed that the reduction in tensile strength due to these defects was small compared to the normal variation in the tensile strength of graphite.

Magnesium Oxide Pellets[20,21]

The magnesium oxide pellets were purchased according to specification, and no inspection was performed at ORNL on this item.

FABRICATION

The fabrication procedure outlines the detailed sequence and precautions necessary for the assembly of a fuel element and the subsequent incorporation of seven fuel elements into a fuel assembly. All parts were supplied to the Welding and Brazing Laboratory of the Metallurgy Division in the inspected condition. The complete assembly is shown in Fig. 1.

Assembly of Fuel Elements

Cleaning

1. All metallic parts were cleaned prior to assembly by wiping with a clean cotton cheesecloth dampened with trichloroethylene. The inside of each

[20] "Specification for Magnesium Oxide Pellets for Title I Fuel Elements for the Experimental Gas-Cooled Reactor," Spec. No. MS-1-7, Appendix A of this report.

[21] "EGCR-Fuel Element Sub-Assembly," Allis-Chalmers Dwg: SK-MS-1 Appendix B of this report.

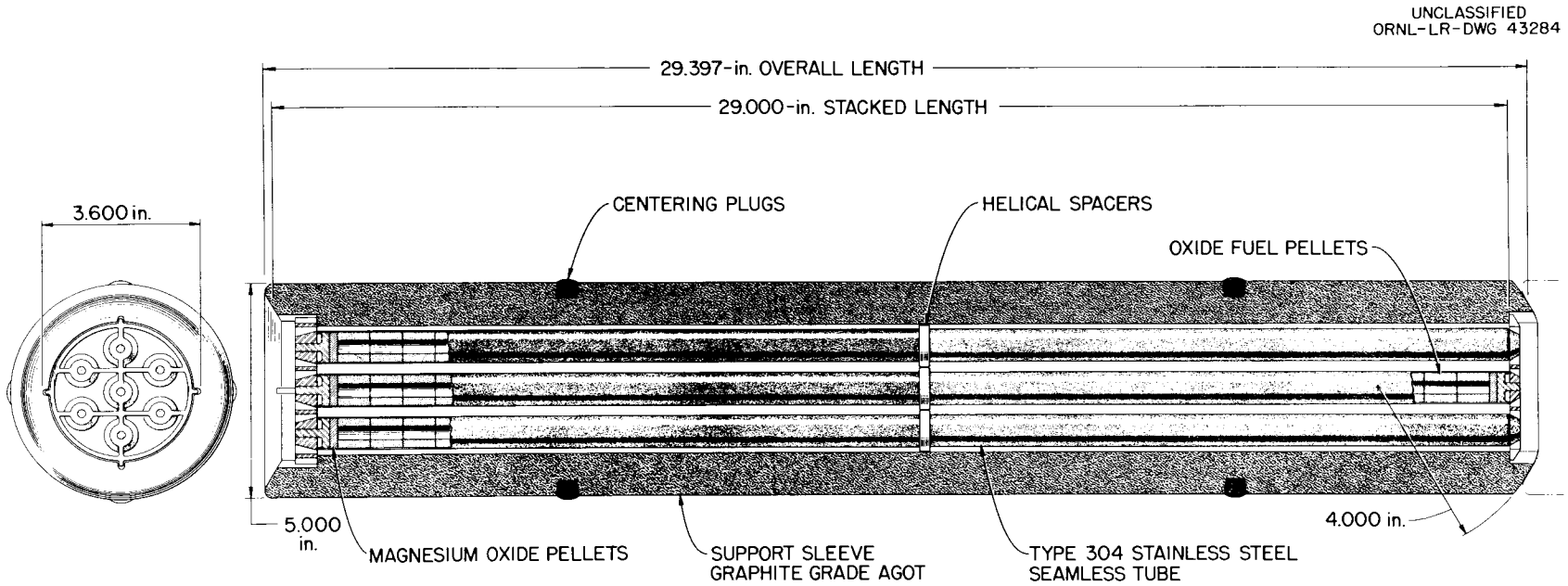

Fig. 1. EGCR Fuel Assembly.

tube was cleaned by running a cheesecloth wad dampened with solvent through the bore.

2. Cleanliness was maintained by handling parts with clean cotton gloves during assembly. Parts were stored in clean, closed, cardboard boxes.

3. The mild steel dummy fuel pellets were stored in a desiccator to prevent rusting.

4. No cleaning was performed on graphite components.

Handling

1. Parts damaged by nicks, scratches, gouges, or dents during cleaning or assembly were rejected pending reinspection.

2. It was found that extreme precautions were necessary in handling the graphite sleeves in order to prevent chipping of the ends.

3. Between assembly steps, elements were stored in wooden boxes as shown in Fig. 2.

Brazing of Mid-Plane Spacers

Both furnace brazing and induction brazing were utilized to join the mid-plane spacers to the tubes, using GE-81 as the brazing alloy.[22] This alloy was selected because it has a high melting point, good irradiation stability, good corrosion resistance, and contains no constituents that will embrittle the base metal.

Application of Brazing Alloy.- Each fuel tube was positioned vertically in a jig and the spacer was slipped over the top end of the tube and allowed to rest on the jig, as shown in Fig. 3. The jig was dimensioned so that the spacer would be in the correct axial position when resting on the block. The brazing alloy in the form of a slurry was applied to the joint between the top of the spacer and the tube with an eyedropper. The tube was then removed from the jig and the braze slurry applied to the joint between the bottom of the

[22] Composition: 66% Ni–19% Cr–10% Si–1% Mn–4% Fe (Manufactured by Vanadium Alloys Steel Corporation, Latrobe, Pa.).

Unclassified
Photo 49675

Fig. 2. Storage Container for Fuel Elements.

Unclassified
Photo 49672

Fig. 3. Brazing Alloy Preplacement Fixture.

spacer and the tube. After a drying time of approx 1 hr, excess brazing alloy was removed. This prevented alloy runoff but provided sufficient alloy to form a uniform fillet.

Furnace Brazing.- The furnace-brazing operation was performed in a tubular muffle furnace with an atmosphere of dry hydrogen. Five tubes were jigged as shown in Fig. 4 and brazed horizontally. The tubes were held for 5 min at the brazing temperature of 1150°C, moved to the cooling zone and cooled for 20 min in the atmosphere of dry hydrogen. Furnace brazing resulted in occasional bowing of the tubes in amounts up to 0.030 in. However, the tubes proved sufficiently flexible so that the bow did not interfere with loading of the cylindrical fuel pellets or assembly of the completed elements into the graphite sleeves.

Induction Brazing.- Induction brazing was performed in a quartz tube that was surrounded by a water-cooled copper coil. The tube was purged with dry helium at a flow rate of 10 cfm for 3-5 min prior to the application of heat. Heat was applied intermittently until melting of the brazing alloy was observed, usually 1 to 1-1/2 min. The brazed joint was cooled while still under the helium atmosphere for a period of 3 min prior to removal from the quartz tube. The tubes were brazed one at a time and required approx 5 min each. No bowing was detected in tubes brazed by the induction method because only a short section of the tube was heated.

The use of GE-81 alloy in furnace brazing results in occasional longitudinal cracks in both the fillets and the joint as shown in Fig. 5; however, since these small cracks are acceptable, the GE-81 alloy is still considered the best material for this application due to the advantages listed previously. No cracking was observed in joints of specimens that were induction brazed. This lack of cracking may be due to the fact that the tube wall of the induction-brazed pieces was diluted to a depth of 0.002 to 0.005 in. during induction brazing, but no dilution was experienced in furnace brazing. The dilution observed in induction brazing was attributed to the higher temperatures that must be attained in the base metal to initiate wetting. No effort was made to develop a method for controlling the depth of dilution of the tube wall.

Unclassified
Photo 49668

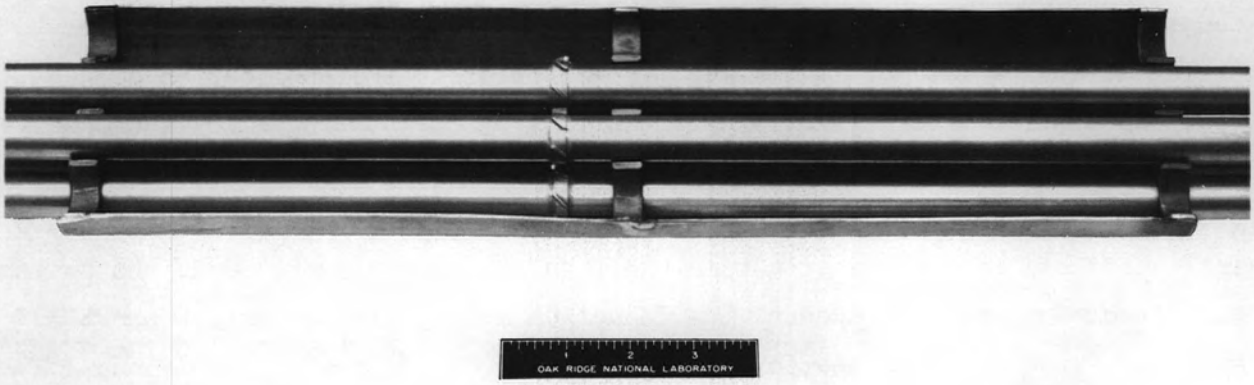

Fig. 4. Furnace Brazing Fixture with Tubes in Place.

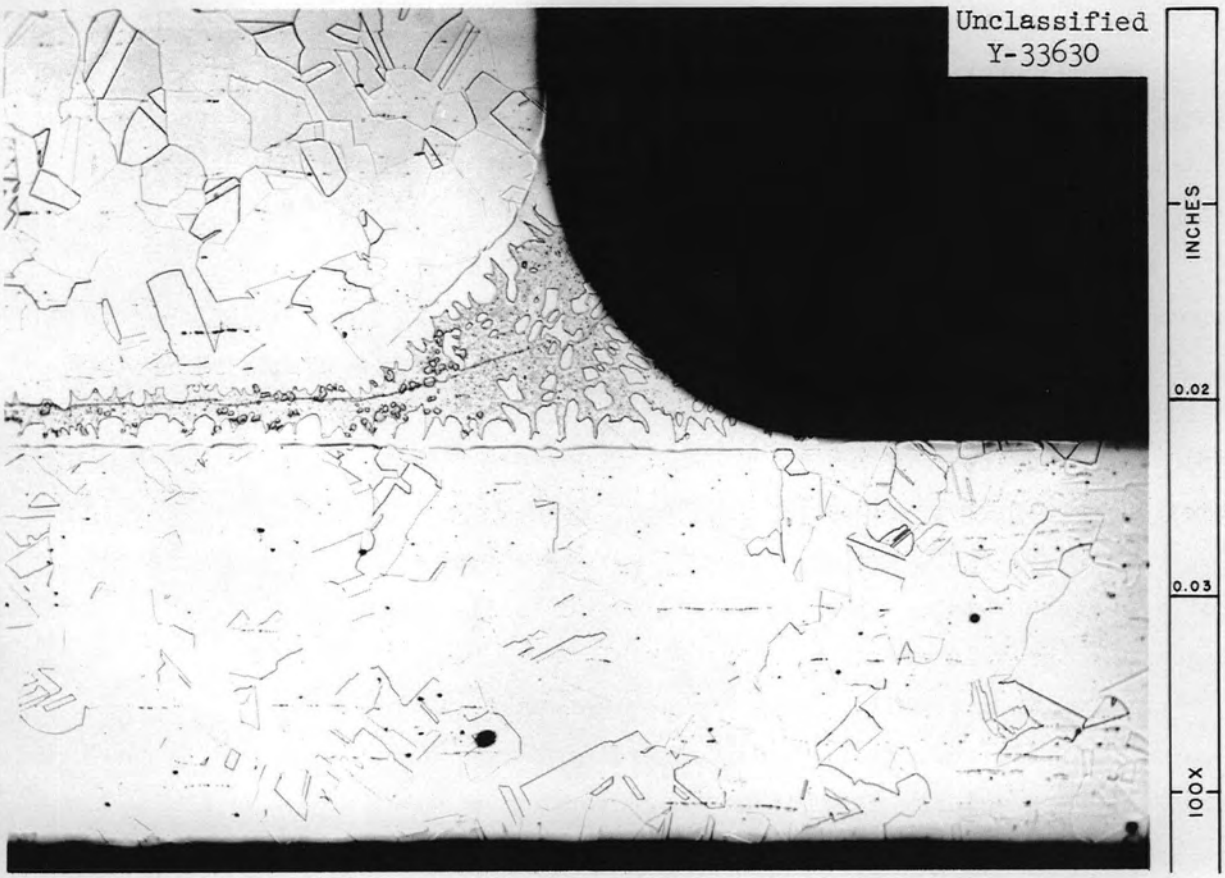

Fig. 5. Photomicrograph of Furnace-Brazed Joint Showing Longitudinal Cracking. Modified aqua regia etch.

A metallographic cross section through a satisfactory furnace-brazed joint is shown in Fig. 6, while Fig. 7 shows a typical induction-brazed joint.

Installation of Bottom End Cap

End Cap Pressing.- The bottom end cap was pressed into place using an assembly fixture as shown in Fig. 8. An interference fit was originally throught necessary in order to ensure optimum welding conditions. However, in order to perform this operation practically during production, it was considered necessary to reduce the diameter of the end caps sufficiently to permit a press fit. Consequently, all end caps were reduced 0.001 in. in diameter.

Welding of End Cap.- After pressing the end cap into the tube, the assembly was positioned for welding in a chuck-type rotary positioner as shown in Fig. 9. The positioner was designed so that the tube could be rotated at welding speeds varying from 2 to 6 rpm. Welding equipment required for the operation consisted of an inert-gas, tungsten-arc torch, and a direct-current welding rectifier power supply equipped with a high-frequency pilot circuit for remote arc-starting and a current-decay attachment. To minimize heat build-up in the tube a spring-loaded copper split ring was used to chill the tube near the weld area.

The welding conditions were such that uniform penetration of approx 0.030–0.035 in. was obtained without roll over or flattening of the weld bead. The following welding conditions were used:

Current	17–18 amp
Open-circuit voltage	82 v
Arc-voltage	14 v
Cover gas	20 cfh argon
Arc-starting	Automatic high frequency
Arc distance	0.030–0.040 in.
Electrode	1/16-in. diam, 2% thoriated tungsten, pointed
Collet	5/16–3/8-in.-diam opening
Welding speed	9.4 ipm (4 rpm)

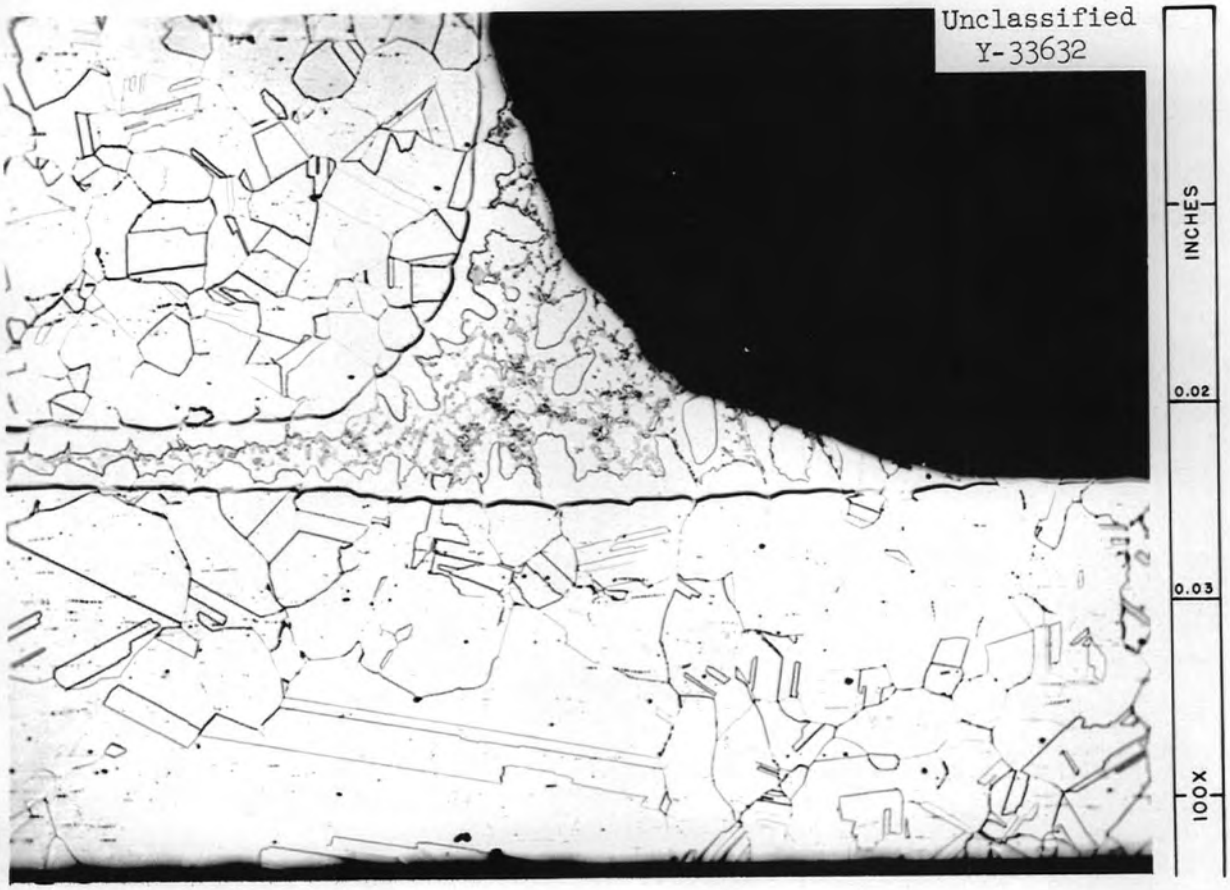

Fig. 6. Photomicrograph of Sound Furnace-Brazed Joint. Modified aqua regia etch.

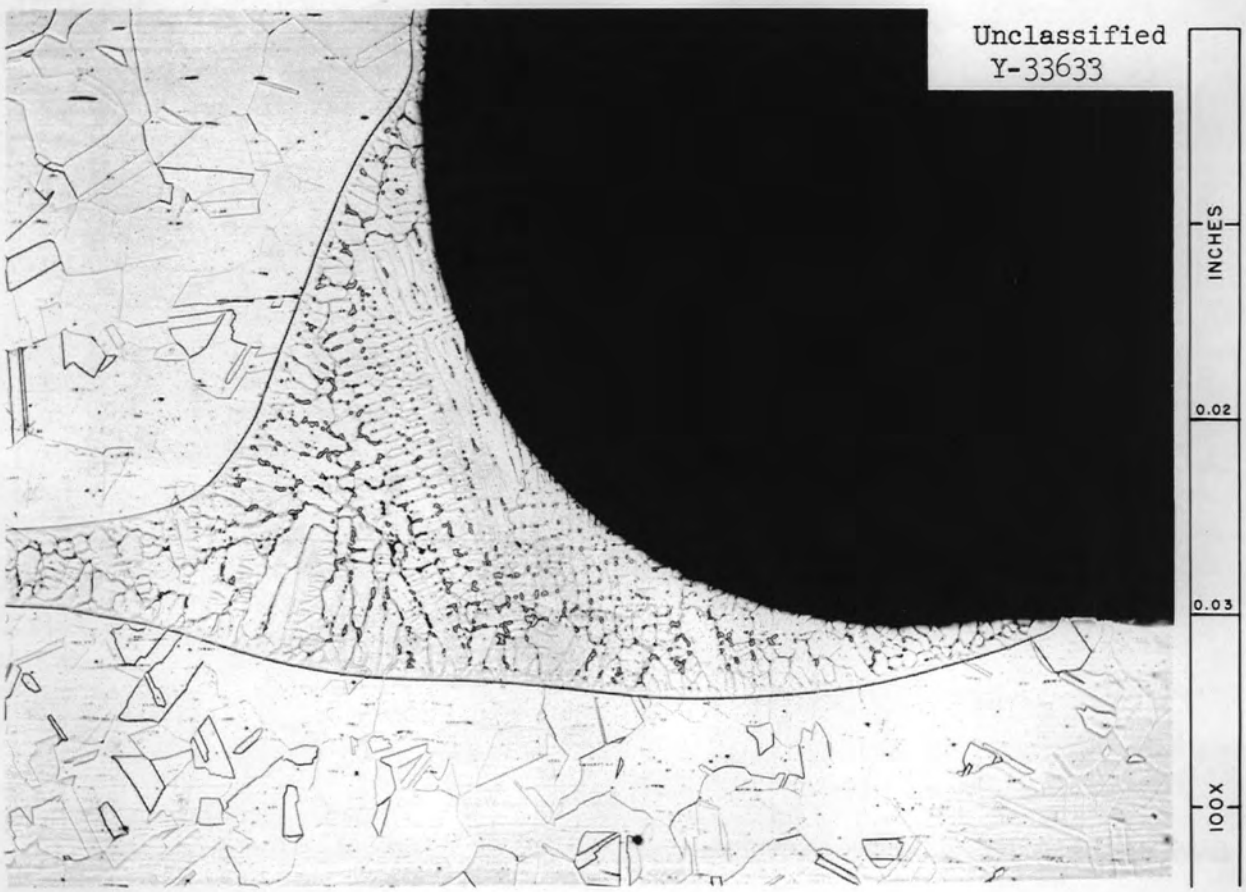

Fig. 7. Photomicrograph of Induction-Brazed Joint.
Modified aqua regia etch.

Unclassified
Photo 49667

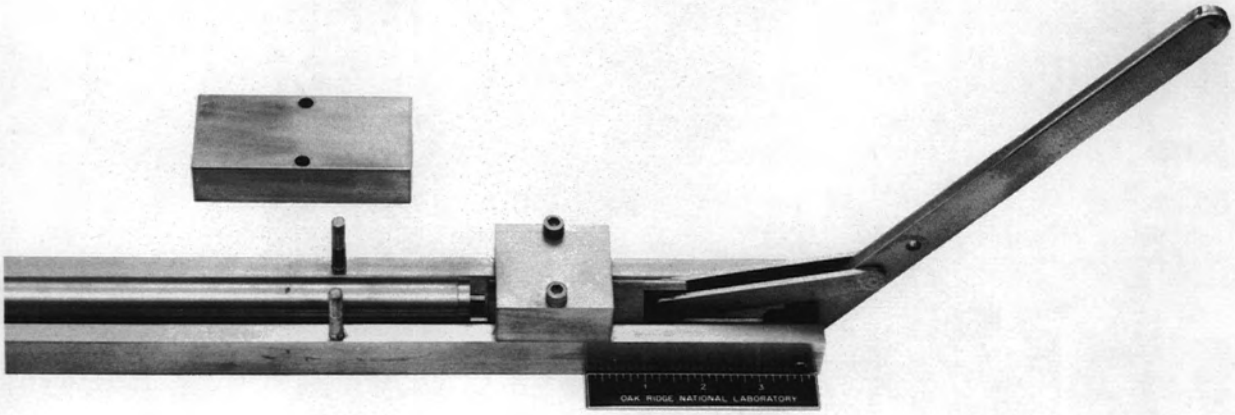

Fig. 8. Jig for Pressing End Caps into Tubing.

Unclassified
Photo 46067

Fig. 9. Positioner for Welding End Caps in Air.

After the tube was positioned, the welding sequence was as follows:

(1) Start rotation
(2) Start argon preflow – 8-sec duration
(3) Start arc
(4) Weld 360 deg at full current of 17–18 amps and overlap weld 120 deg at full current
(5) Taper current to extinguish arc over 90 deg of rotation
(6) Argon cover-gas post flow for 15 sec
(7) Stop rotation
(8) Clean weld with fine-bristle stainless wire brush to remove oxide discoloration

The welds were then leak tested, radiographed, and fluorescent dye-penetrant inspected by the Nondestructive Testing Group.

Loading of Fuel Pellets

Thirty-six steel fuel pellets, two MgO spacers, and a fuel tube were placed in the loading jig as shown in Fig. 10. The fuel and spacers were then inserted into the tube and the assembled element placed in a storage box until an atmosphere-chamber load of two or three complete fuel assemblies had been accumulated.

Assembly of Elements in Atmosphere Chamber

Loading.- Sufficient elements for two or three fuel assemblies, the end-cap pressing apparatus, and a welding positioner were loaded into the atmosphere chamber shown in Fig. 11 and evacuated to a pressure of 10 μ Hg. (A pressure of 100 μ appears to be satisfactory, and would save considerable time during production.) The chamber was backfilled with helium and a slight positive pressure was maintained. The top end cap was pressed into all the elements in the atmosphere chamber. The closure welds were then made by the tungsten-arc method with the element and welding torch in a horizontal position. The welding fixture is shown in Fig. 12.

The atmosphere-chamber-welding technique was identical to that described previously[23] with the exception that the argon flow through the torch was

[23]"Installation of Bottom End Cap," p. 18 of this report.

Unclassified
Photo 49673

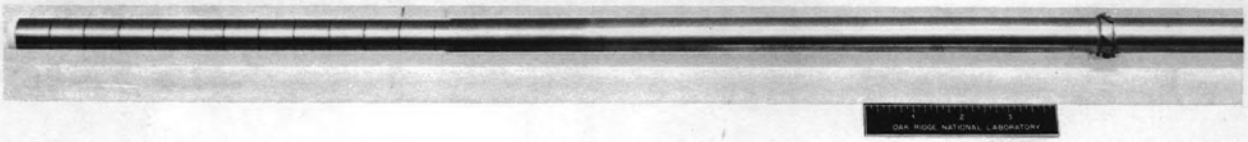

Fig. 10. Jig for Loading Fuel Pellets into the Tube.

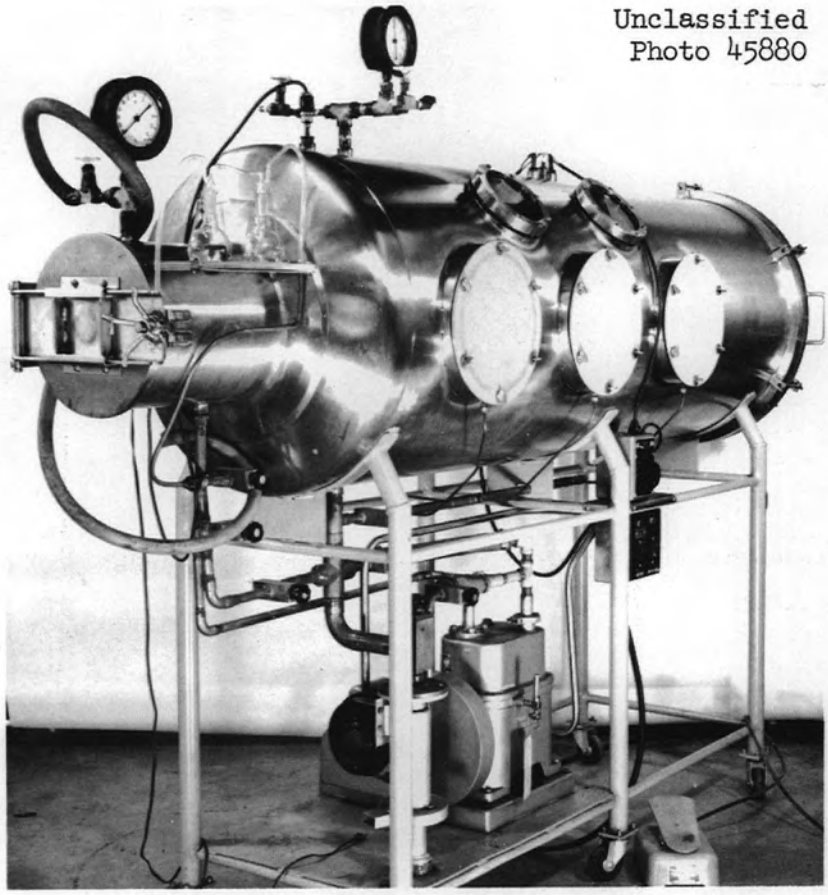

Fig. 11. Atmosphere Chamber for Performing Final Closure Welds on Fuel Elements.

Unclassified
Photo 48816

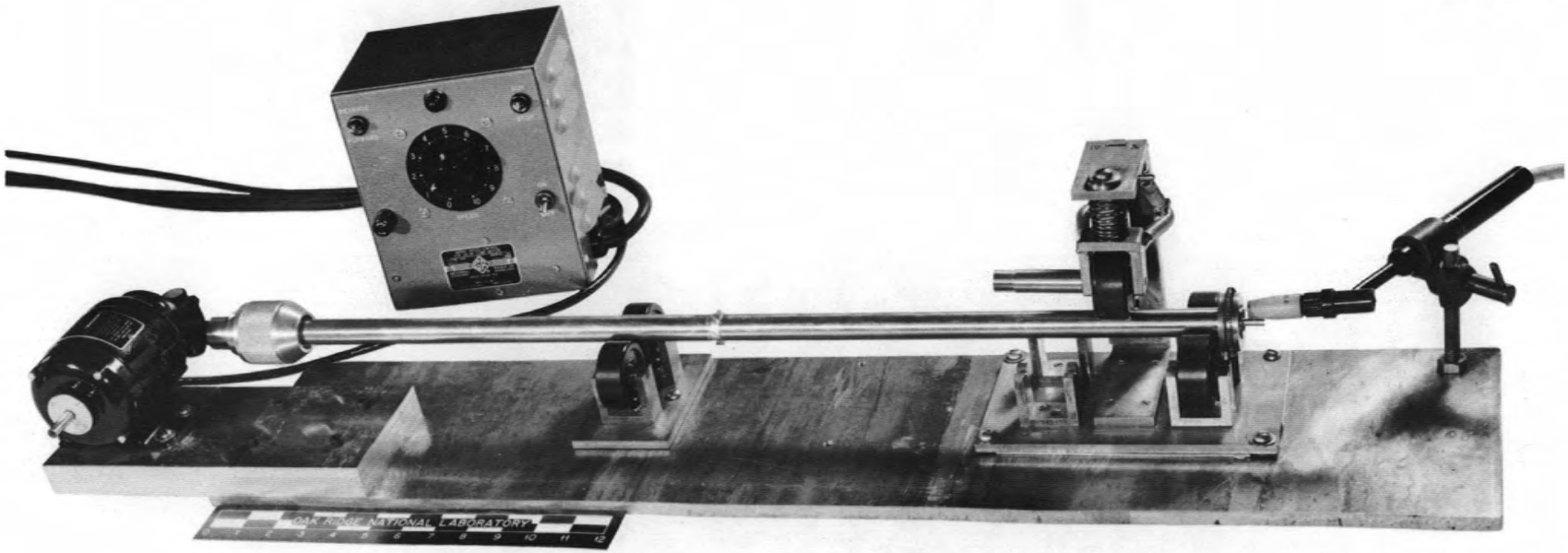

Fig. 12. Positioner for Welding in the Atmosphere Chamber.

reduced to 8 cfh and flowed only while welding was being performed. This was done to minimize contamination of the helium inside the fuel element with argon. The use of this technique prevented the argon content of the atmosphere chamber from exceeding 3 vol % or 0.3 wt %. Ninety percent helium was specified for the internal atmosphere of the element.

Inspection

The fuel element welds were fluorescent dye-penetrant inspected, radiographed, and leak tested by a mass-spectrometer leak detector within 24 hr after removal from the atmosphere chamber. Two of 350 elements were rejected due to leak rates greater than that from the 10^{-9} cc/sec standard. No welds were rejected during penetrant and radiographic inspection.

Assembly of Fuel Assembly

Welding of Top Spider

Seven fuel elements were positioned upright in the bottom spider. To ensure appropriate matching of the helical fins on the spacers during assembly, the projection on the top end cap of each fuel element was scribed with a line that approximately bisected the axial projection of a fin on the spacer. As each of the elements was placed in the bottom spider, it was rotated so that the scribe line was approximately oriented in a diametral direction. The top spider was then placed onto the seven elements and the scribe lines on the top end cap projections and match marks on the top spiders were aligned.

Tack welds were made on each of the seven joints; these were then followed by higher current fusion welds as shown in Fig. 13. The manual, inert-gas, tungsten-arc welding process was used with the following conditions:

(a) Current	85–90 amp
(b) Cover gas	20 cfh argon
(c) Arc-starting	Automatic high frequency
(d) Arc gap	0.030–0.045
(e) Electrode	1/16-in. diam, 2% thoriated tungsten
(f) Collet	3/8-in.-diam opening

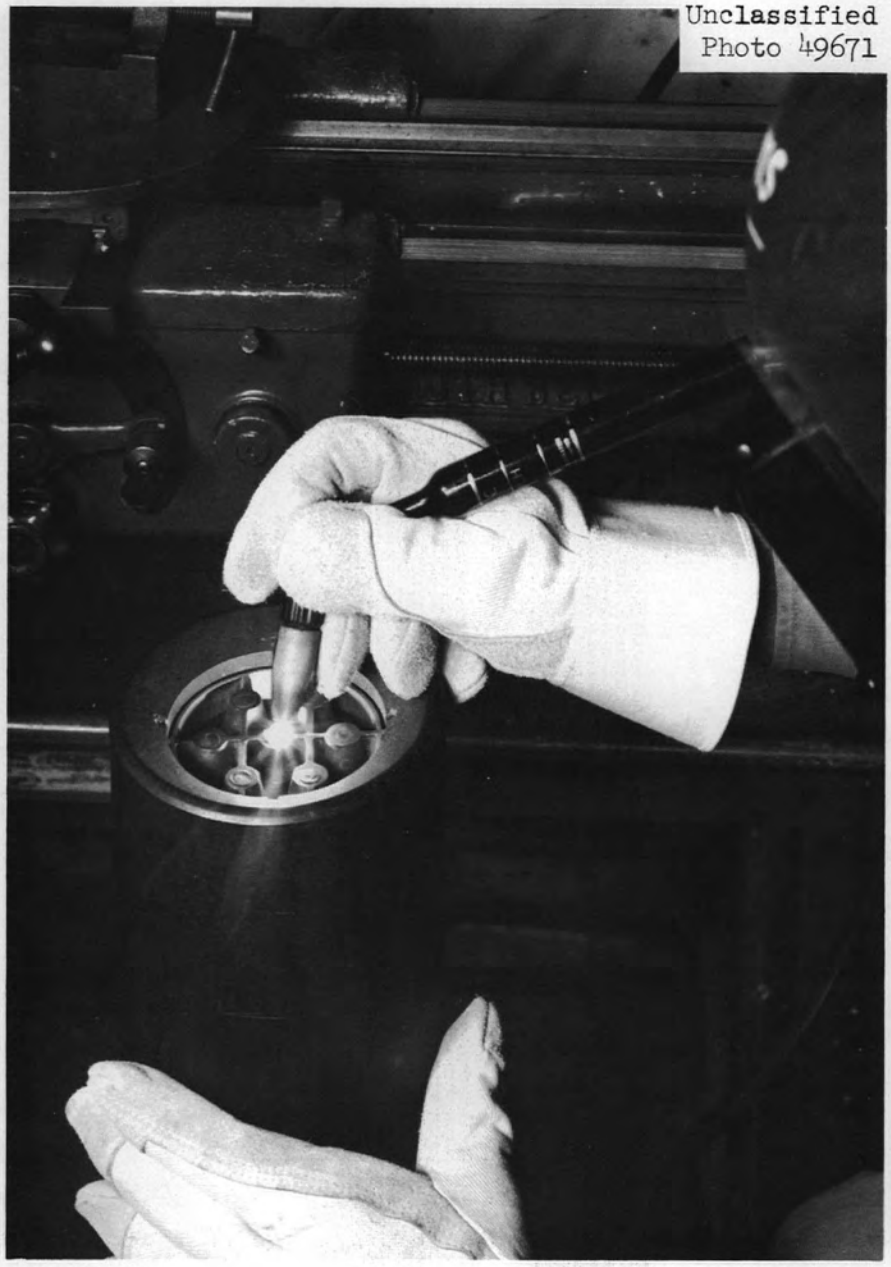

Fig. 13. Welding of Top Spider to Fuel Elements.

The weld covered the entire 360 deg and had a penetration of 0.040–0.050 in. as measured metallographically in test welds.

Attachment of Bottom Spider

The bottom spider was removed and the cluster of fuel elements was slipped into the graphite sleeve as shown in Fig. 14 so that the slots in the graphite engaged the positioning projections of the top spider. The radial position of the single web was noted so that the bottom spider could be oriented accordingly. Next, the subassembly was inverted so that the top spider rested on a cylindrical block. The bottom spider was installed and three peripheral elements, 120 deg apart, were welded to the bottom spider as shown in Fig. 15 using the procedure described for welding of the top spider. The completed fuel assembly was then packed in the transfer container and sent for dimensional inspection.

Man-Hour Estimates

The pilot assembly was performed under laboratory conditions where production methods could not be employed; for example, work was not performed continuously, but intermittently, and the work could not be organized from a production control or methods standpoint. However, observation of the performance of each operation permits an approximation of times that appear reasonable under production conditions.

Furnace Brazing of Mid-Plane Spacers

Furnace brazing was performed in a purified hydrogen atmosphere in a laboratory furnace, using batches of 5 tubes jigged to minimize bowing.[24]

[24] A brazing batch consisted of 5 tubes in this pilot run. Proper jigging and a larger furnace should permit batch-brazing of approx 20 tubes. All times presented above are for a batch of 20 tubes.

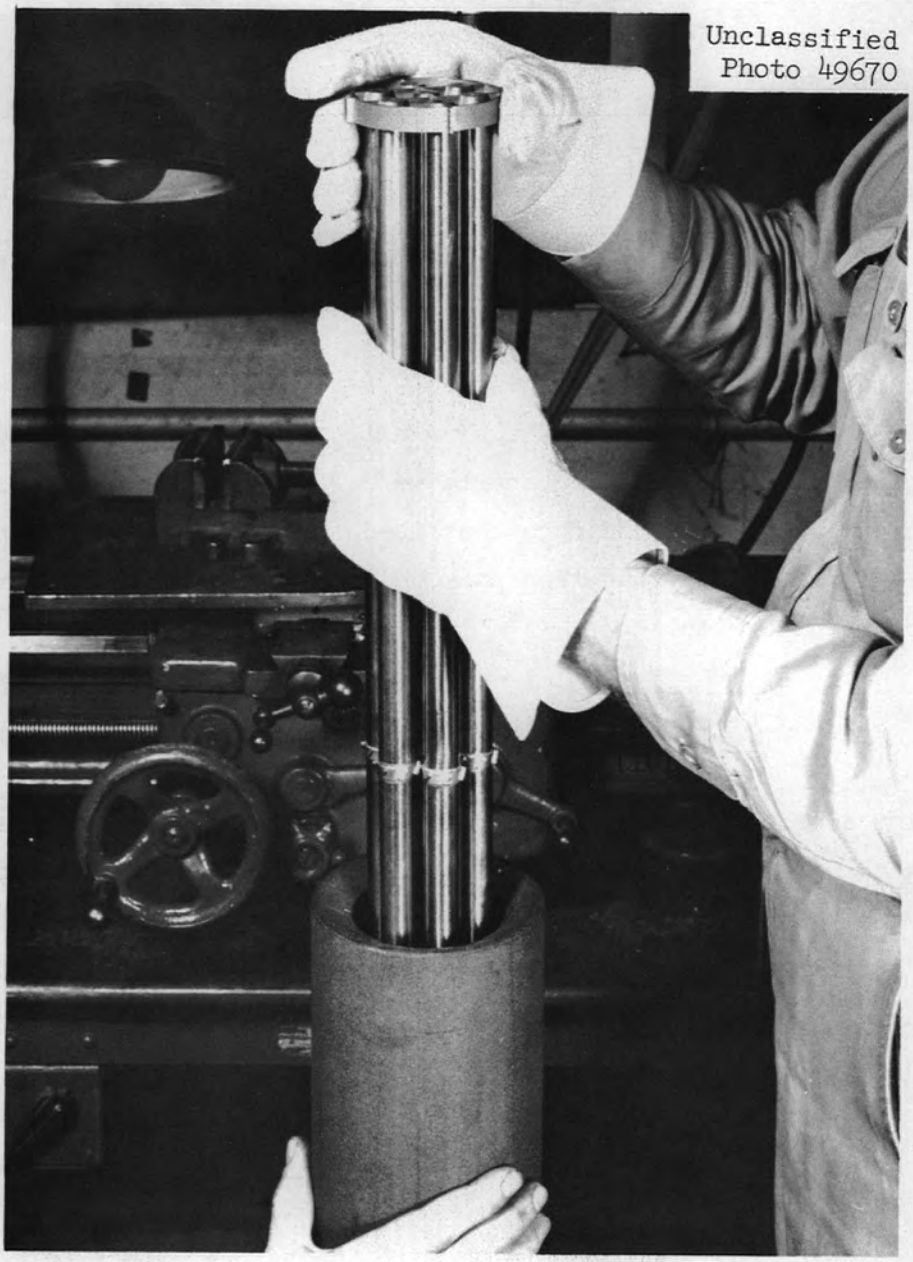

Fig. 14. Installation of Fuel Element Cluster into the Graphite Sleeve.

Fig. 15. Welding of Bottom Spider to the Fuel Assembly.

Operation	Min for 20 pieces
1. Place tube in brazing jig, slip spacer on, apply braze slurry on one side[25]	12
2. Remove from brazing jig, apply slurry to underside and place in horizontal brazing jig[24]	12
3. Install brazing jig in furnace	3
4. Push jig into hot zone	1
5. Pull jig into cold zone	1
6. Remove 20 tubes from brazing furnace	3
7. Place tubes in rack and transport to welding turntable	3
	35
Visual inspection of 20 brazed joints	5
Time for each $\frac{40 \text{ min}}{20 \text{ pcs}} = \sim 2 \frac{\text{min}}{\text{pc}}$	40

Induction Brazing of Spacers

Although induction brazing was carried out on single tubes, it was found that the time required was essentially the same as that required for furnace brazing when compared to 20-tube batches.

Welding of Bottom End Cap to Tube

The bottom end caps were welded and inspected prior to assembly of the fuel elements. However, no time is allotted here for inspection, since inspection of both joints after assembly is preferable.

Operation	Min each
1. Press end cap into tube	1/3
2. Position tube in turntable and attach chill block	1/3
3. Position electrode	1/2
4. Weld	1/2
5. Remove chill block and remove from turntable	1/3
	2

[25] This work may be done while the operator is waiting for one batch to come to temperature or cool. Thus no man-hours are charged to waiting for tubes to come to temperature or cool.

Loading Pellets

It is recommended that this be done by the pellet manufacturer to minimize handling. However, an estimate is made based upon the fuel pellets being procured in stacked columns and loaded into elements by the fuel element manufacturer.

	Operation	Min each
1.	Place tube on table	1/3
2.	Insert MgO spacer	1/3
3.	Remove pellets from packed column and place in V block	1/2
4.	Tilt V block and tube and slide pellets in at an angle	1/2
5.	Insert MgO spacer and replace loaded tube in box	1/3
		2

Welding of Top End Cap to Tube in Atmosphere Chamber

These estimates are based upon placing 50 fuel elements in the glove box at one time.

	Operation	Min
1.	Place 50 fuel elements and end caps into glove box	10
2.	Install end on glove box	5
3.	Pump down to 100-μ pressure	10
4.	Backfill	3
5.	Pump down to 100-μ pressure	10
6.	Backfill	3
7.	Install end caps on 50 fuel elements	15
8.	Weld end caps on 50 fuel elements	150
9.	Remove end from glove box	5
10.	Remove elements from glove box	10
		221

$$\text{Minutes each} = \frac{221}{50} = 4\text{-}1/2 \text{ min ea}$$

Helium-Leak Test Inspection of Welds

This estimate is based upon performing the helium-leak tests after both welds have been made and a helium atmosphere is contained inside the element.

Since the frequency of a defective weld was rare during the pilot run, it would be practical to test several elements at one time and then test individually if a leak is detected. This estimate is based upon testing seven elements at one time.

	Operation	Min/7 elements
1.	Place fuel elements in vacuum chamber	1/2
2.	Evacuate to required pressure	15
3.	Test for presence of helium with mass spectrometer	1
4.	Release vacuum and remove elements	1
		17-1/2

Assembly

The following man-hour estimates are based upon actual observations of assembly operations in the ORNL Welding and Brazing Laboratory:

	Operation	Min/assembly
1.	Scribe mark on each top end cap projection	2
2.	Place bottom spider on jig	1/3
3.	Place 7 fuel elements in bottom spider	2
4.	Align center element with match marks on top spider	1/3
5.	Align 6 outer elements with match marks on top spider	2
6.	Fit top spider onto 7 elements	2
7.	Tack weld elements to spider	1
8.	Fusion weld element to spider	2
9.	Invert assembly and remove bottom spider	1/3
10.	Slide sleeve over inverted assembly and note position of single cross bar in top spider	1/2
11.	Fit bottom spider onto 7 elements, being careful to orient single cross bar with single cross bar in top spider	1
12.	Tack weld 3 alternate outer elements	1/2
13.	Fusion weld 3 alternate outer elements	1
		14

Inspection of Assembly

The spacing between the fuel elements and between the outer fuel elements and the support sleeve must be checked while the assembly is positioned vertically.

Operation	Min/assembly
1. Pass "go" gage between fuel elements to ensure 0.240-min space at top and bottom and between outer elements and sleeve to ensure 0.115-in. min space	1-1/2
2. Visual inspection of welds joining fuel elements to spiders	1/2
3. Visually inspect to see that central spacers are properly aligned	1
4. Check visually to see that assembly is properly identified	1
	4

ACKNOWLEDGMENT

The authors wish to express appreciation for the assistance given by L. C. Williams and J. D. Hudson in the assembly and man-hour estimate phases of the report. Nondestructive testing of the components was carried out by R. W. McClung and R. A. Nance, with dimensional inspection by K. K. Klindt. An additional 25 fuel elements were fabricated by T. R. Housley and C. E. Schubert of the Engineering and Mechanical Division. Preparation of metallographic specimens was carried out by L. A. Amburn.

APPENDIX A

EGCR FUEL ELEMENT SPECIFICATIONS

EGCR FUEL ELEMENT SPECIFICATION
METALLURGY DIVISION
OAK RIDGE NATIONAL LABORATORY

Spec. No. MS-1-1
Date: August 27, 1959
Page: 1 of 4

Union Carbide Nuclear Company
A Division of Union Carbide Corporation
Oak Ridge, Tennessee

Subject: SPECIFICATION FOR TYPE 304 STAINLESS STEEL TUBING FOR TITLE I FUEL ELEMENTS FOR THE EXPERIMENTAL GAS-COOLED REACTOR

I. SCOPE:

This specification defines seamless, cold-drawn type 304 stainless steel tubing with an inside diameter of 0.710 in. and a wall thickness of 0.020 in.

II. MANUFACTURING REQUIREMENTS:

A. Tubes shall be extruded or pierced, hot-rolled and cold-drawn, or reduced to specific size.

B. Redraw stock shall be completely inspected, both internally and externally, using liquid dye penetrant and a boroscope. All surface imperfections shall be removed before the material is used.

III. REFERENCES:

RMIS-2, "Procedure Specification for the Inspection of Reactor-Grade, High-Performance Quality Tubing"

ASTM Designation: A 269, "Specification for Seamless and Welded Austenitic Stainless Steel Tubing for General Service"

RMIS-7, Revised August 4, 1959, "Procedure Specification for the Eddy-Current Inspection of Thin-Wall Austenitic Stainless Steel Tubing"

IV. CHEMICAL COMPOSITION:

The chemical composition of the austenitic steel used shall conform to the requirements of the latest edition of ASTM Designation: A 269, grade TP 304. The steel shall conform also to the following impurity content on a weight basis:

Cobalt	0.2 wt % (max)
Boron	10 ppm (max)

V. PHYSICAL PROPERTIES:

The tubing shall be furnished in the annealed condition. However, a maximum of 10% residual cold work for size control will be allowed. The annealed tubing shall have a maximum Rockwell hardness number of B 90. The tubing shall also conform to the burst-test requirements specified in the latest edition of ASTM Designation: A 269.

Subject: SPECIFICATIONS FOR TYPE 304 STAINLESS STEEL TUBING FOR TITLE I FUEL ELEMENTS FOR THE EXPERIMENTAL GAS-COOLED REACTOR

VI. DIMENSIONS AND TOLERANCES:

A. The inside diameter shall be $0.710 \begin{smallmatrix} +0.002 \\ -0.000 \end{smallmatrix}$ in. "Inside diameter" here does not mean "average inside diameter" but refers to actual diameter at any given plane perpendicular to the axial centerline.

B. The wall thickness shall be 0.020 ± 0.002 in. "Wall thickness" does not mean "average wall thickness" but refers to wall thickness in any plane normal to the axial centerline. All dimensional tolerance measurements shall be made after the hydrostatic test is performed.

C. The tubing shall be furnished in lengths of $27.500 \begin{smallmatrix} +0.005 \\ -0.000 \end{smallmatrix}$ in.

D. The tube ends shall be perpendicular to the outside surface within 0.002 in.

E. Corners formed by ends of tubing and longitudinal surfaces shall be square and shall not be chamfered.

F. The tubing shall be supplied in straight lengths, with a maximum curvature of 0.010 in./ft measured in any plane.

VII. SURFACE FINISH AND CONDITION:

Tubing shall have a bright surface finish on the inside surfaces and shall be free of scale and oxide film or other foreign materials. The outside surface shall be polished, using a belt of 500 grit or finer.

Tubing shall be furnished free of seams, cracks, laps, and intergranular attack. All inclusions, pits, gouge marks, and score marks in excess of 0.0025 in. shall be cause for rejection. Discontinuities which individually would be considered nonrejectable are to be considered rejectable defects if they occur as multiples around any circumference of the tube or if they are aligned along an element of the tube.

VIII. ACCEPTANCE TESTS:

A. Nondestructive

1. A liquid penetrant inspection shall be performed by the seller on the outside-diameter surface of 100% of the finished tubing, in accordance with the requirements of RMIS-2.

2. A 100% inspection, using the eddy-current inspection as specified in RMIS-7 (August 4, 1959) shall be performed by the seller.

Subject: SPECIFICATION FOR TYPE 304 STAINLESS STEEL TUBING FOR TITLE I FUEL ELEMENTS FOR THE EXPERIMENTAL GAS-COOLED REACTOR

VIII. ACCEPTANCE TESTS (continued):

3. As an additional check for straightness, a mandrel with a minimum diameter of 0.685 in. and a minimum length of 27.5 in. shall be passed through all tubes.

4. For measuring the inside diameter, a plug gage having a minimum diameter of 0.708 in. shall be passed through all tubes.

   However, all of the tubing shall be subjected to an air gage inspection of the inside diameter by the company. Tubing failing to meet the dimensional requirements for inside diameter shall be subject to rejection.

5. Each tube shall be tested at a hydrostatic pressure of 800 lb.

6. Ten percent of the tubing shall be subjected to an ultrasonic-resonance-type inspection for determining the wall thickness. Tubing failing to meet the dimensional requirements for wall thickness shall be rejected. If 10% of the inspected tubing is found to be rejectable, an additional 20% will then be examined in the same manner. A rejection rate of greater than 10% is cause for rejection of the entire lot.

   Mechanical measurements of the wall thickness shall be made by the seller at 90-deg intervals on each end of all the lengths of tubing that are not subjected to an ultrasonic inspection for wall thickness.

   Tubing not subjected to ultrasonic resonance tests for wall thickness by the seller is subject to such tests at ORNL. The tubing is subject to rejection if the tests at ORNL show that the wall thickness does not conform to the dimensional specification.

B. Destructive

1. Metallographic examination at 100X of sections of tubes selected at random from any single lot received from the seller shall show structure free from intergranular attack and shall conform to the requirements given in Section V of this specification.

2. Metallographic specimens shall be maintained by the seller, available for examination by the company, for a period of one year from date of shipment.

Subject: SPECIFICATION FOR TYPE 304 STAINLESS STEEL TUBING FOR TITLE I FUEL ELEMENTS FOR THE EXPERIMENTAL GAS-COOLED REACTOR

IX. ACCESS TO SELLER'S PLANT:

The inspector representing the company shall have free entry, at all times while work on the contract of the company is being performed, to all parts of the seller's plant that concern the manufacture of the material ordered. The manufacturer shall afford the inspector, without charge, all reasonable facilities to assure him that the material is being furnished in accordance with these specifications. All tests and inspection shall be made at the place of manufacture prior to shipment unless otherwise specified.

X. MARKING AND PACKING:

A. Each tube shall be marked with a continuously recurring legend not to exceed 12 in. in length, using nonmetallic inks (nonsulfur bearing) that are not water soluble. The marking shall include the words "TP 304" and "ASTM A 269" as well as heat number, size, and seller's name or trademark.

B. Each tube shall be packed in such a manner as to prevent damage and to maintain the cleanliness of the tubing during handling and shipment.

XI. TEST REPORTS:

Four certified copies of test reports shall be furnished by the seller to the company at the time of final shipment, and when applicable, as lots of tubing are received from the seller.

EGCR FUEL ELEMENT SPECIFICATION
METALLURGY DIVISION
OAK RIDGE NATIONAL LABORATORY

Spec. No. MS-1-6
Date: Sept. 17, 1959
Page: 1 of 1

Union Carbide Nuclear Company
A Division of Union Carbide Corporation
Oak Ridge, Tennessee

Subject: SPECIFICATION FOR MOCK FUEL PELLETS FOR TITLE I FUEL ELEMENTS FOR THE EXPERIMENTAL GAS-COOLED REACTOR

I. SCOPE:

This specification defines mock fuel pellets that are right circular cylinders 0.707 in. in diameter, 0.740 in. long, and made of steel.

II. MANUFACTURING REQUIREMENTS:

The mock fuel pellets shall be manufactured from steel.

III. DIMENSIONS AND TOLERANCES:

The mock fuel pellets shall conform to the following dimensions and tolerances:

Diameter	0.707 ± 0.001 in.
Length	$0.740 \begin{smallmatrix} +0.000 \\ -0.005 \end{smallmatrix}$ in.
Perpendicularity of faces with respect to cylindrical surface	0.005 in.

IV. SURFACE FINISH:

The cylindrical surfaces shall have a finish of 63 rms or better.

All burrs shall be removed from corners of the pellets.

Surfaces shall be free of scale, oil, grease, and dirt.

V. ACCEPTANCE TESTS:

A. Nondestructive

Ten percent of the finished pieces shall be selected at random by the inspector of the company and subjected to dimensional inspection to assure conformance to Section III of this specification.

If more than 5% of the random selection of pellets do not conform to the dimensions specified in Section III, 100% inspection shall be performed on the entire order. Pellets not conforming to the dimensional specifications shall then be rejected.

B. Destructive

None.

VI. PACKING:

The pellets shall be packed so as to prevent mechanical damage to the cylindrical surface.

EGCR FUEL ELEMENT SPECIFICATION
METALLURGY DIVISION
OAK RIDGE NATIONAL LABORATORY

Spec. No. MS-1-5
Date: Sept. 11, 1959
Page: 1 of 3

Union Carbide Nuclear Company
A Division of Union Carbide Corporation
Oak Ridge, Tennessee

Subject: SPECIFICATION FOR TOP AND BOTTOM END CAPS FOR TITLE I FUEL ELEMENTS FOR THE EXPERIMENTAL GAS-COOLED REACTOR

I. SCOPE:

This specification defines type 304 stainless steel end caps, 0.710 in. in diameter.

II. MANUFACTURING REQUIREMENTS:

The top and bottom end caps shall be manufactured in strict conformance to Dwgs. B-37766 and B-37767, respectively.

The end caps shall be manufactured from wrought bar stock by machining or by forging and machining.

III. REFERENCES:

Dwg: B-37766, "Top End Cap"

Dwg. B-37767, "Bottom End Cap"

ASTM Designation: A 276, "Specification for Hot-Rolled, Cold-Finished, Corrosion-Resisting Steel Bars"

RMIS-2, "Procedure Specification for the Inspection of Reactor-Grade, High-Performance Quality Tubing," Section IV-B, Liquid Penetrant Inspection.

IV. CHEMICAL COMPOSITION:

The chemical composition of the steel used shall conform to the latest edition of ASTM Designation: A 276, type 304 (wrought bar stock). The steel shall conform also to the following impurity content requirements on a weight basis:

Cobalt	0.2% (max)
Boron	10 ppm (max)

V. PHYSICAL AND MECHANICAL PROPERTIES:

The physical and mechanical properties shall conform to the requirements of the latest edition of ASTM Designation: A 276, type 304 (wrought bar stock).

Subject: SPECIFICATION FOR TOP AND BOTTOM END CAPS FOR TITLE I FUEL ELEMENTS FOR THE EXPERIMENTAL GAS-COOLED REACTOR

VI. DIMENSIONAL TOLERANCES:

The top and bottom end caps shall conform to the dimensions and tolerances specified on Dwgs. B-37766 and B-37767, respectively.

The critical dimensional tolerances are summarized below:

End cap diameter	$0.712 \begin{smallmatrix} +0.001 \\ -0.000 \end{smallmatrix}$ in.
Diameter of end cap projection	$0.200 \begin{smallmatrix} +0.001 \\ -0.000 \end{smallmatrix}$ in.
Thickness of lip	0.020 ± 0.002 in.
Perpendicularity of projection with respect to bottom face	90 deg ± 0 deg, 5 min
Height of projection above lip	0.260 ± 0.003 in.
Height of lip	$0.250 \begin{smallmatrix} +0.000 \\ -0.010 \end{smallmatrix}$ in.
Minimum thickness dimension	0.150 ± 0.005 in.

VII. SURFACE FINISH AND CONDITION:

Surfaces of the top and bottom end caps shall conform to the finishes specified on Dwgs. B-37766 and B-37767.

All surfaces shall be free of cracks, pits, laps, seams, gouges, and intergranular attack.

Surfaces shall be free of scale, oxide film, dirt, oil, grease, or other foreign material.

VIII. ACCEPTANCE TESTS:

A. Nondestructive

1. One hundred percent of the bar stock from which the end caps are made shall be tested ultrasonically.

2. One hundred percent visual inspection shall be performed to ensure conformance with the requirements of Section VII of this specification.

Subject: SPECIFICATION FOR TOP AND BOTTOM END CAPS FOR TITLE I FUEL ELEMENTS FOR THE EXPERIMENTAL GAS-COOLED REACTOR

VIII. ACCEPTANCE TESTS (continued):

3. One hundred percent dimensional inspection shall be performed to ensure conformance to Section VI of this specification. Two diametral measurements, 90 deg apart, shall be made of the end cap diameter and on the diameter of the end cap projection.

4. A liquid penetrant inspection shall be performed over the entire surface of 100% of the finished caps by the seller in accordance with the requirements of RMIS-2.

B. Destructive

The bar stock from which the end caps are fabricated shall be sampled in accordance with ASTM Designation: A 276 for use in chemical analyses and physical tests to assure conformance of the finished pieces with Sections IV, V, and VII of this specification.

IX. TEST REPORTS:

Four certified copies of test reports shall be furnished by the seller to the company at the time of shipment.

EGCR FUEL ELEMENT SPECIFICATION
METALLURGY DIVISION
OAK RIDGE NATIONAL LABORATORY

Spec. No. MS-1-2
Date: August 28, 1959
Page: 1 of 2

Union Carbide Nuclear Company
A Division of Union Carbide Corporation
Oak Ridge, Tennessee

Subject: SPECIFICATION FOR MID-PLANE SPACERS FOR TITLE I FUEL ELEMENTS FOR THE EXPERIMENTAL GAS-COOLED REACTOR

I. SCOPE:

This specification applies to mid-plane spacers with helical fins for Title I Fuel Elements for the Experimental Gas-Cooled Reactor. The spacers are made of type 304 stainless steel.

II. MANUFACTURING REQUIREMENTS:

The spacers shall be manufactured in accordance with Dwg. C-37762.

The spacers shall be fabricated from wrought bar stock or a casting.

III. REFERENCES:

ASTM Designation: A 276 – 57 T, "Tentative Specifications for Hot-Rolled and Cold-Finished Corrosion-Resistant Steel Bars"

ASTM Designation: A 351 – 58 T, "Tentative Specifications for Ferritic and Austenitic Steel Castings for High-Temperature Service"

RMIS-2, "Procedure Specification for the Inspection of Reactor-Grade, High-Performance Quality Tubing"

IV. CHEMICAL COMPOSITION:

The chemical composition shall conform to the latest edition of ASTM Designation: A 276, type 304 (wrought bar stock) or ASTM Designation: A 351, grade CF 8, respectively. The steel shall also conform to the following impurity content requirements on a weight basis:

Cobalt	0.2% (max)
Boron	10 ppm (max)

V. PHYSICAL AND MECHANICAL PROPERTIES:

Depending upon the method of fabrication, the physical and mechanical properties shall conform to the requirements of the latest edition of ASTM Designation: A 276 (wrought bar stock) or ASTM Designation: A 351, grade CF 8, respectively.

VI. DIMENSIONAL TOLERANCES:

The spacer shall conform to the dimensions and tolerances specified on Dwg. C-37762.

Subject: SPECIFICATION FOR MID-PLANE SPACERS FOR TITLE I FUEL ELEMENTS FOR THE EXPERIMENTAL GAS-COOLED REACTOR

VII. SURFACE FINISH AND CONDITION:

Surfaces of the spacer shall conform to the finishes specified on Dwg. C-37762. All surfaces shall be free of scale, oxide film, dirt, oil, grease, or other foreign material. Surfaces shall be free of cracks, pits, laps, seams, gouges, and intergranular attack.

VIII. ACCEPTANCE TESTS:

A. Nondestructive

1. If the spacers are made from wrought bar stock, 100% of the bar stock shall be tested ultrasonically.

2. One hundred percent visual inspection shall be performed to ensure conformance with the requirements of Section VII of this specification.

3. One hundred percent dimensional inspection shall be performed to ensure conformance with Section VI of this specification.

4. A liquid penetrant inspection shall be performed over the entire surface of 100% of the finished spacers by the seller in accordance with the requirements of RMIS-2.

B. Destructive

The bar stock or castings from which the spacers are fabricated shall be sampled according to a statistical plan mutually agreeable to the company and seller for use in chemical analysis, physical testing, and metallographic examination to ensure conformance of the finished pieces with Sections IV and V of this specification.

IX. TEST REPORTS:

Four certified copies of the test reports shall be furnished by the seller to the company at time of shipment and, when applicable, as lots of bar stock or castings are received from the seller.

X. ACCESS TO SELLER'S PLANT:

The seller shall inspect the material covered by these specifications prior to shipment. If the company elects to inspect the material at the seller's plant, the inspector representing the company shall have free entry at all times, while work on the contract of the company is being performed, to all parts of the seller's plant that concern the manufacture of the material ordered. The seller shall afford the inspector, without charge, all reasonable facilities to satisfy him that the material is being furnished in accordance with these specifications. This inspection shall be so conducted as not to interfere unnecessarily with the operation of the plant.

EGCR FUEL ELEMENT SPECIFICATION
METALLURGY DIVISION
OAK RIDGE NATIONAL LABORATORY

Spec. No. M-1-4
Date: Sept. 11, 1959
Page: 1 of 4

Union Carbide Nuclear Company
A Division of Union Carbide Corporation
Oak Ridge, Tennessee

Subject: SPECIFICATION FOR TOP AND BOTTOM SPIDERS FOR TITLE I FUEL ASSEMBLIES FOR THE EXPERIMENTAL GAS-COOLED REACTOR

I. SCOPE:

This specification defines type 304 stainless steel top and bottom spiders.

II. MANUFACTURING REQUIREMENTS:

The top and bottom spiders shall be manufactured in strict conformance to Dwgs. C-37763 and C-37764, respectively.

The top and bottom spiders shall be manufactured by investment casting and machining to final dimensions. Prior to machining, the castings shall be annealed for 1/2 hr at 1800–1900°F and air cooled.

III. REFERENCES:

ASTM Designation: A 351 – 58 T, "Tentative Specifications for Ferritic and Austenitic Steel Castings for High-Temperature Service"

Dwg. C-37763, "Top Spider"

Dwg. C-37764, "Bottom Spider"

ASTM Designation: A 370, "Methods and Definitions for Mechanical Testing of Steel Products"

IV. CHEMICAL COMPOSITION:

The chemical composition of the austenitic stainless steel used shall conform to the requirements of the latest edition of ASTM Designation: A 351 – 58 T, grade CF 8. The steel also shall conform to the following impurity requirements on a weight basis:

Cobalt	0.2% (max)
Boron	10 ppm (max)

V. PHYSICAL PROPERTIES:

The physical properties of the austenitic stainless steel used shall conform to the requirements of the latest edition of ASTM Designation: A 351 – 58 T, grade CF 8.

Subject: SPECIFICATION FOR TOP AND BOTTOM SPIDERS FOR TITLE I FUEL ASSEMBLIES FOR THE EXPERIMENTAL GAS-COOLED REACTOR

VI. MECHANICAL PROPERTIES:

The mechanical properties of the austenitic stainless steel used shall conform to the requirements of the latest edition of ASTM Designation: A 351 – 58 T, grade CF 8. Each piece shall be sound and free of internal cracks, voids, porosity, or other harmful defects.

VII. HEAT TREATMENT:

Prior to machining, the castings shall be annealed for 1/2 hr at 1800–1900°F and air cooled.

VIII. DIMENSIONAL TOLERANCES:

The top spider shall conform strictly to the dimensions and tolerances specified in Dwg. C-37763. The bottom spider shall conform strictly to the dimensions and tolerances specified in Dwg. C-37764.

A summary of the critical tolerances is presented below:

Radial positioning of holes	$1.000 \begin{smallmatrix} +0.000 \\ -0.010 \end{smallmatrix}$ in.
Circumferential or angular positioning of holes	60 deg ± 0 deg, 15 min
Diameter of holes	$0.201 \begin{smallmatrix} +0.001 \\ -0.000 \end{smallmatrix}$ in.
Perpendicularity of holes with respect to bottom of casting	90 deg ± 0 deg, 5 min
Width of positioning projections	$0.115 \begin{smallmatrix} +0.000 \\ -0.003 \end{smallmatrix}$ in.
Angular location of positioning projections	
a. Top spider	90 deg ± 0 deg, 5 min
b. Bottom spider	60 deg ± 0 deg, 5 min
Perpendicularity of positioning projections with respect to bottom of castings	90 deg ± 0 deg, 5 min

IX. SURFACE FINISH AND CONDITION:

The surfaces of the top and bottom spider shall conform to the finishes specified on Dwgs. C-37763 and C-37764, respectively.

Subject: SPECIFICATION FOR TOP AND BOTTOM SPIDERS FOR TITLE I FUEL ASSEMBLIES FOR THE EXPERIMENTAL GAS-COOLED REACTOR

IX. SURFACE FINISH AND CONDITION (continued):

The surfaces shall be free of cracks, pits, laps, seams, gouges, and intergranular attack.

The surfaces shall be free of scale, oxide film, dirt, oil, grease, or other foreign material.

X. ACCEPTANCE TESTS:

A. Nondestructive

1. Each finished top and bottom spider shall be subjected to mechanical inspection to ensure that it conforms dimensionally to the drawing and to the critical dimensions specified in Section VIII of this specification. The method of inspection to the above specified dimensions shall be approved by the company.

2. Each finished top and bottom spider shall be subjected to visual inspection to ensure conformance to Section IX of this specification.

3. A liquid penetrant inspection shall be performed over the entire surface of 100% of the finished spacers by the seller.

4. One hundred percent radiographic inspection shall be performed to ensure conformance with Section VI of this specification.

B. Destructive

1. An analysis of each heat of steel shall be made by the seller to determine the percentages of the elements prescribed in Section IV of this specification. This analysis shall be made from drillings taken not less than 1/4 in. beneath the surface of a test ingot obtained during the pouring of the heat. The chemical composition thus determined shall be reported to the company or its representative and shall conform to the requirements described in Section IV of this specification.

2. One tension test shall be made from each heat in each heat-treatment charge. Test specimens shall be prepared and tension tests shall be performed in accordance with ASTM Designation: A 370 – 54 T.

Subject: SPECIFICATION FOR TOP AND BOTTOM SPIDERS FOR TITLE I FUEL ASSEMBLIES FOR THE EXPERIMENTAL GAS-COOLED REACTOR

X. ACCEPTANCE TESTS (continued):

3. Metallographic examination at 100X shall be made of sections of five top spiders and five bottom spiders selected at random. These examinations shall show the structure to be free from intergranular attack, pipe, porosity, and shall conform to the requirements described in Section VII in this specification.

XI. MARKING AND PACKING:

A. Each top spider shall be scribed with diametral marks on the top surfaces of each of the seven truncated cones. These diametral marks shall be positioned such that their projections pass through the center of the hole in the central cone.

B. Each spider shall be packed in such a manner as to prevent damage and to maintain the cleanliness of the spider during handling and shipment.

XII. TEST REPORTS:

Four certified copies of test reports and photomicrographs of metallographic sections shall be furnished by the seller to the company at the time of final shipment, and when applicable, as lots of spiders are received from the seller.

EGCR FUEL ELEMENT SPECIFICATION
METALLURGY DIVISION
OAK RIDGE NATIONAL LABORATORY

Spec. No. M-1-3
Date: Sept. 11, 1959
Page: 1 of 4

Union Carbide Nuclear Company
A Division of Union Carbide Corporation
Oak Ridge, Tennessee

Subject: SPECIFICATION FOR GRAPHITE SUPPORT SLEEVES FOR TITLE I FUEL ASSEMBLIES FOR THE EXPERIMENTAL GAS-COOLED REACTOR

I. SCOPE:

This specification defines nuclear-grade, graphite support sleeves. The sleeves are 29 in. long, 5 in.-o.d., and 3 in.-i.d.

II. MANUFACTURING REQUIREMENTS:

A. Base Materials

The material used for sleeve and centering plugs shall be nuclear-quality graphite. The base materials used shall be of a purity comparable to commercial "Texas" petroleum coke and Barrett No. 2 pitch binder.

B. Manufacturing Process

The graphite shall be manufactured by a process comparable to that used for manufacture of AGOT grade graphite, with the provision that the graphitizing temperature shall be not less than 2800°C. No Freon or chlorination treatment is required. Nuclear quality is to be ensured by the proper selection of base materials and use of a graphitizing temperature sufficiently high to remove inherent impurities by volatilization.

III. REFERENCES:

Dwg. E-37761, "Graphite Support Sleeve"

IV. PHYSICAL PROPERTIES:

A. Graphite Density

Finished machined graphite conforming to this specification shall have a minimum average density for all support sleeves of 1.65 g/cm^3. The minimum acceptable density in any one graphite support sleeve shall be not less than 1.60 g/cm^3.

B. Nuclear Properties

Nuclear purity or freedom from excessive amounts of critical contaminants shall be determined by in-pile tests to establish capture cross section for thermal neutrons. Representative graphite samples shall be employed for the purpose of these tests. The number and size of test samples shall be agreed upon by the seller and the

Subject: SPECIFICATION FOR GRAPHITE SUPPORT SLEEVES FOR TITLE I FUEL ASSEMBLIES FOR THE EXPERIMENTAL GAS-COOLED REACTOR

IV. PHYSICAL PROPERTIES (continued):

company prior to initiation of tests. These tests will be waived for orders of small quantities if the seller will guarantee that the material meets the nuclear specification defined in the subsequent paragraph.

The microscopic cross section for thermal neutrons at the "most probable" velocity (2200 m/sec at room temperature) shall not exceed 4.5 mb.

V. MECHANICAL PROPERTIES:

The mechanical properties of the material from which the sleeve is fabricated shall conform to the following minimum values:

	70°F	1200°F
Tensile strength, psi		
parallel to extrusion	1400	1580
perpendicular to extrusion	1300	1450
Compressive strength, psi		
parallel to extrusion	6000	6800
perpendicular to extrusion	6400	7200

VI. DIMENSION TOLERANCES:

The support sleeve shall conform dimensionally to Dwg. E-37761. A summary of the critical tolerances is presented below:

Bore diameter	3.000 ± 0.005 in.
Bore straightness	0.020 in. maximum bow
Width of slots, top and bottom	$0.125 \begin{smallmatrix} +0.003 \\ -0.000 \end{smallmatrix}$ in.
Circumferential position of top and bottom slots	nominal with permissible angular variation of ± 0 deg, 5 min

VII. SURFACE FINISH AND CONDITION:

All surfaces shall be machined to a finish of 125 rms or better. Surfaces shall be free of cracks, chips, holes, or other mechanical damage. All surfaces shall be free of oil, grease, dirt, or other foreign materials.

Subject: SPECIFICATION FOR GRAPHITE SUPPORT SLEEVES FOR TITLE I FUEL ASSEMBLIES FOR THE EXPERIMENTAL GAS-COOLED REACTOR

VIII. ACCEPTANCE TESTS:

A. Nondestructive

1. Each support sleeve shall be dimensionally inspected to ensure dimensional conformance to Dwg. E-37761.

2. Each support sleeve shall be visually inspected to ensure conformance to Section VII of this specification.

3. Density measurements shall be performed on fifteen finished graphite sleeves selected by a representative of the company. If any of the fifteen graphite sleeves has a density of less than 1.60 g/cc, that sleeve shall be rejected and each remaining sleeve shall be subjected to density measurements and rejected if the density falls below 1.60 g/cc. If none of the fifteen samples are rejected for minimum density, the average density of the fifteen samples originally selected shall not be less than 1.65 g/cc; otherwise, the entire order shall be subjected to density tests and only that portion of the order with an average density of 1.65 g/cc will be accepted.

B. Destructive

A total of four samples from each furnace lot of material shall be selected for tensile tests and compression tests. A tensile test shall be performed on one sample taken parallel to the direction of extrusion and on one sample taken perpendicular to the direction of extrusion. A compression test shall be performed on one sample taken parallel to the direction of extrusion and on one sample taken perpendicular to the direction of extrusion.

IX. MARKING AND PACKING:

A. Each graphite support sleeve shall be identified by stenciling or engraving (in a manner so as not to introduce contamination above the specified levels) as follows:

"EGCR-MS-1-3-1"
"EGCR-MS-1-3-2," etc., through 130

These letters and numbers shall be placed on the outside cylindrical surface near the top of the sleeve and shall read vertically.

B. Each support sleeve shall be packed in such a manner as to prevent damage and to maintain the cleanliness of the sleeve during handling and shipment.

Subject: SPECIFICATION FOR GRAPHITE SUPPORT SLEEVES FOR TITLE I FUEL ASSEMBLIES FOR THE EXPERIMENTAL GAS-COOLED REACTOR

X. TEST REPORTS:

Four certified copies of test reports shall be furnished by the seller to the company at the time of final shipment, and when applicable, as partial shipments are received from the seller.

EGCR FUEL ELEMENT SPECIFICATION
METALLURGY DIVISION
OAK RIDGE NATIONAL LABORATORY

Spec. No. MS-1-7
Date: Oct. 10, 1959
Page: 1 of 1

Union Carbide Nuclear Company
A Division of Union Carbide Corporation
Oak Ridge, Tennessee

Subject: SPECIFICATION FOR MAGNESIUM OXIDE PELLETS FOR TITLE I FUEL ELEMENTS FOR THE EXPERIMENTAL GAS-COOLED REACTOR

I. SCOPE:

This specification defines magnesium oxide pellets 0.7 in. in diameter and 3/16 in. thick.

II. CHEMICAL COMPOSITION:

The material shall conform to the following analysis:

SiO_2	0.2 wt % (max)
Fe	0.1 wt % (max)
Al_2O_3	0.35 wt % (max)
CaO	0.1 wt % (max)
B	15 ppm (max)
MgO	Remainder

III. DENSITY:

The pellets shall be sintered to a density of 2.2 ± 0.2 g/cc.

IV. DIMENSIONAL TOLERANCES:

Diameter	0.700 ± 0.005 in.
Thickness	$0.187 \begin{smallmatrix} +0.000 \\ -0.020 \end{smallmatrix}$ in.

V. CLEANLINESS:

The pellets shall be clean and free of moisture, dirt, grease, oil, or fabrication lubricants.

APPENDIX B

ALLIS-CHALMERS DRAWINGS

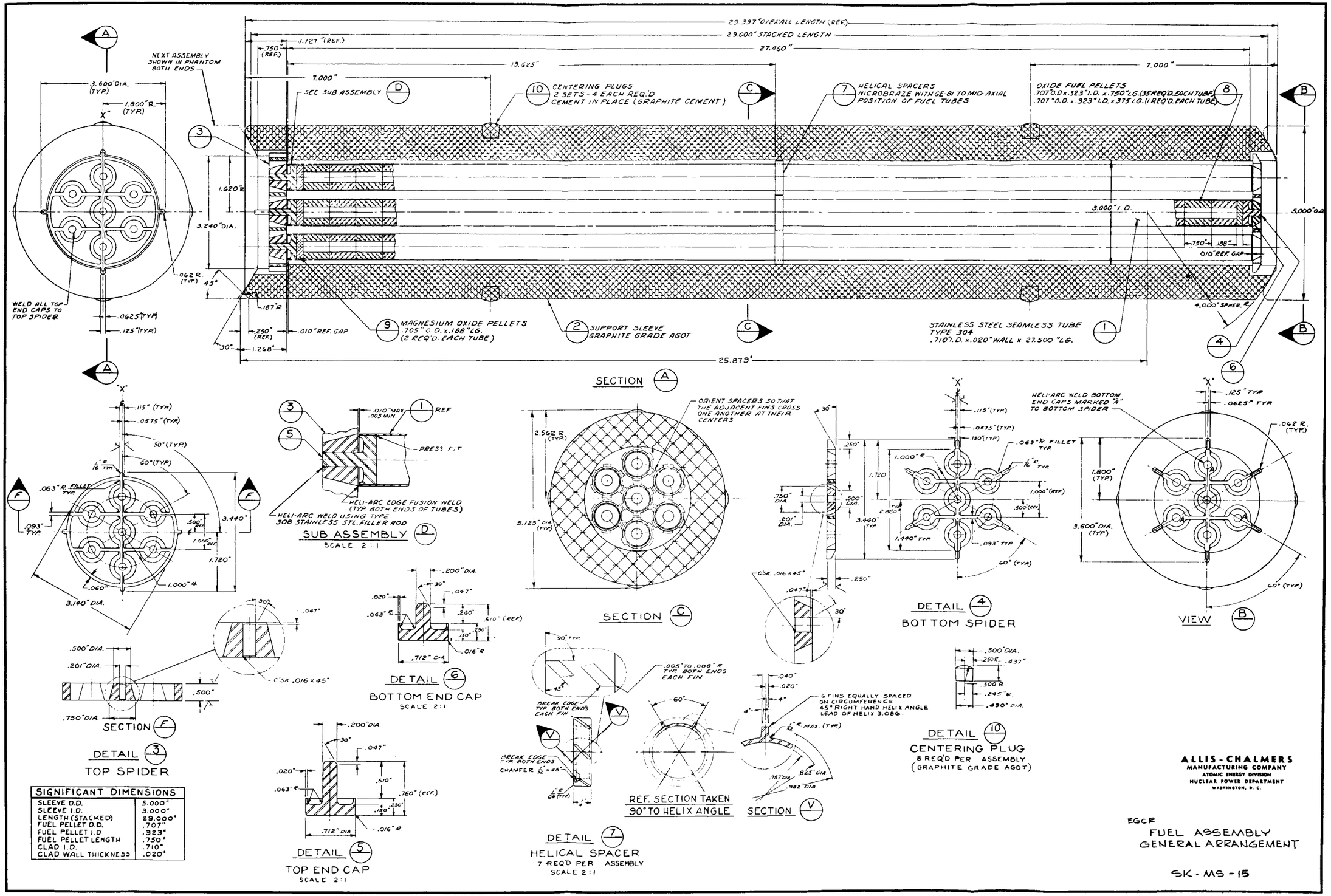

SIGNIFICANT DIMENSIONS	
SLEEVE O.D.	5.000"
SLEEVE I.D.	3.000"
LENGTH (STACKED)	29.000"
FUEL PELLET O.D.	.707"
FUEL PELLET I.D	.323"
FUEL PELLET LENGTH	.750"
CLAD I.D.	.710"
CLAD WALL THICKNESS	.020"

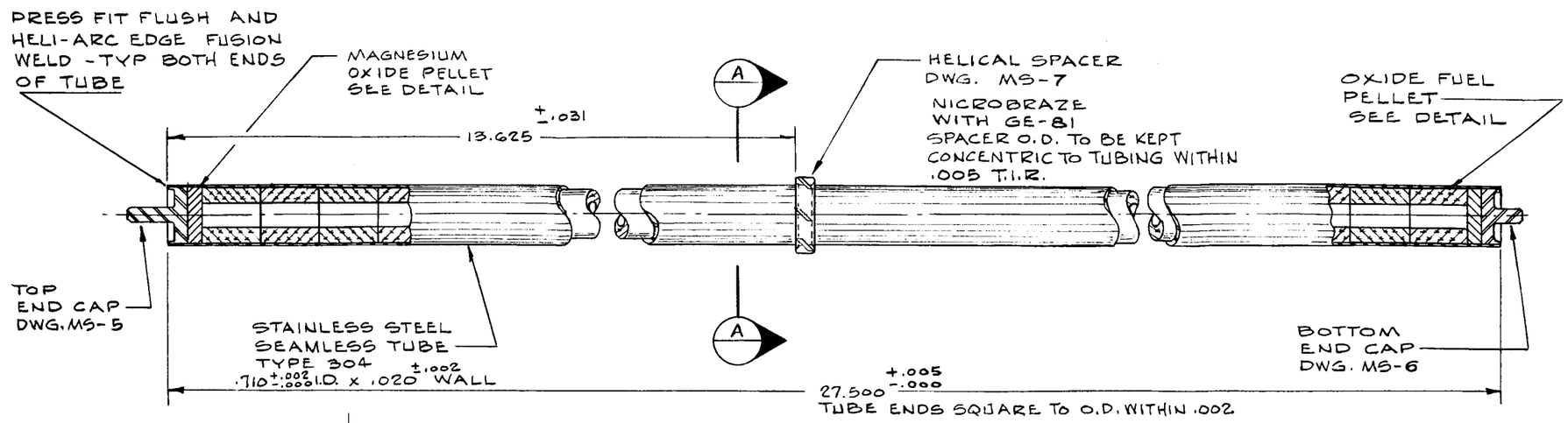

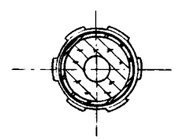

SECTION A-A

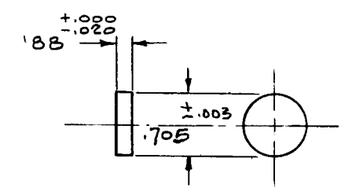

MAGNESIUM OXIDE PELLET

2 REQUIRED
BOTH ENDS OF PELLET TO BE SQUARE WITH O.D. WITHIN .005

NOTES:

1 ABOVE ASSEMBLY TO BE STRAIGHTENED WITHIN .010" OVER ENTIRE LENGTH.

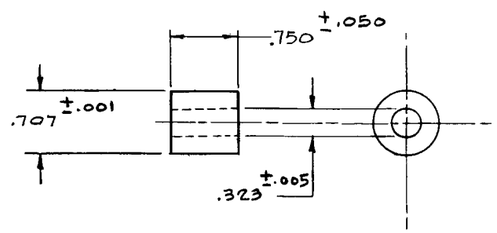

OXIDE FUEL PELLET

1. BOTH ENDS OF PELLET TO BE SQUARE WITH O.D. WITHIN .005
2. STACK HEIGHT OF FUEL = 26.625 +.000 -.062
3. NOMINALLY 35 PELLETS AS SHOWN (STANDARD PELLETS) PLUS 1 PELLET OF HALF LENGTH (SPECIAL PELLET) REQUIRED.
4. I.D. AND O.D. OF PELLET TO BE CONCENTRIC WITHIN .015 T.I.R.

ALLIS-CHALMERS
MANUFACTURING COMPANY
ATOMIC ENERGY DIVISION
NUCLEAR POWER DEPARTMENT
WASHINGTON, D. C.

EGCR
FUEL ELEMENT SUB-ASSEMBLY
DWG. SK.-MS -1

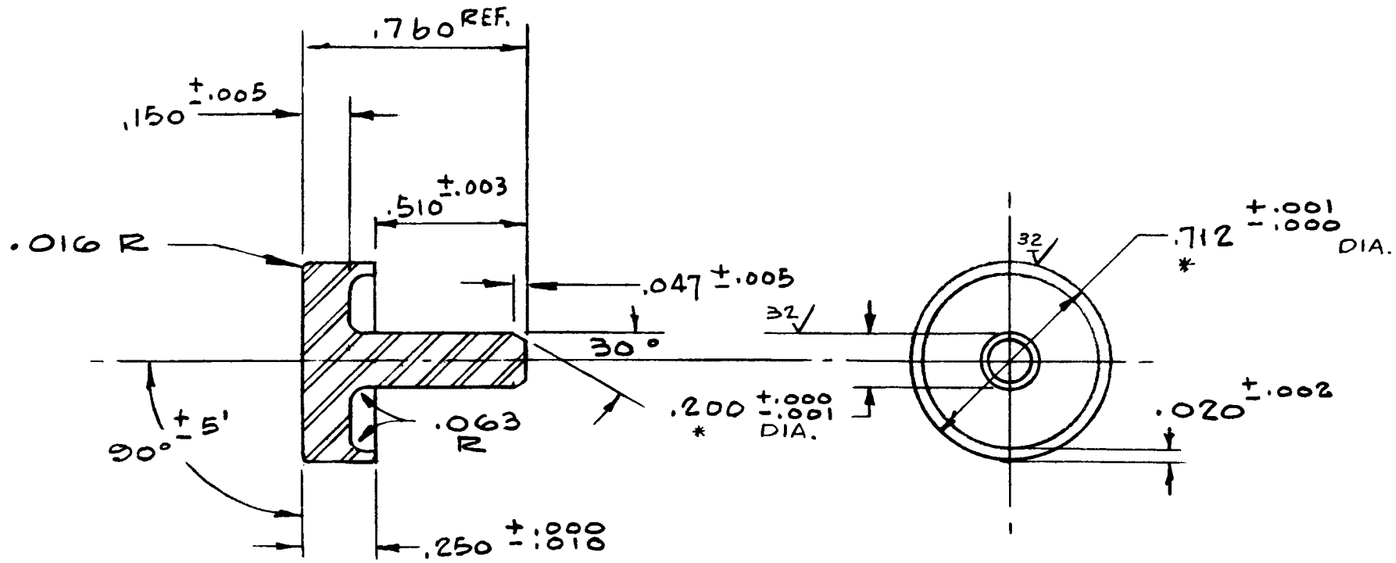

NOTES:

1 * THESE DIAMETERS TO BE CONCENTRIC WITHIN .001 T.I.R.
2. MATERIAL: STAINLESS STL. TYPE 304
3. NO. REQ'D - 10,500.
4. SURFACE ROUGHNESS - 63
5. BREAK ALL SHARP EDGES .010 R. MAX.

ALLIS-CHALMERS
MANUFACTURING COMPANY
ATOMIC ENERGY DIVISION
NUCLEAR POWER DEPARTMENT
WASHINGTON, D. C.

EGCR-FUEL ASSEMBLY
TOP END CAP

DWG: SK.-MS-5

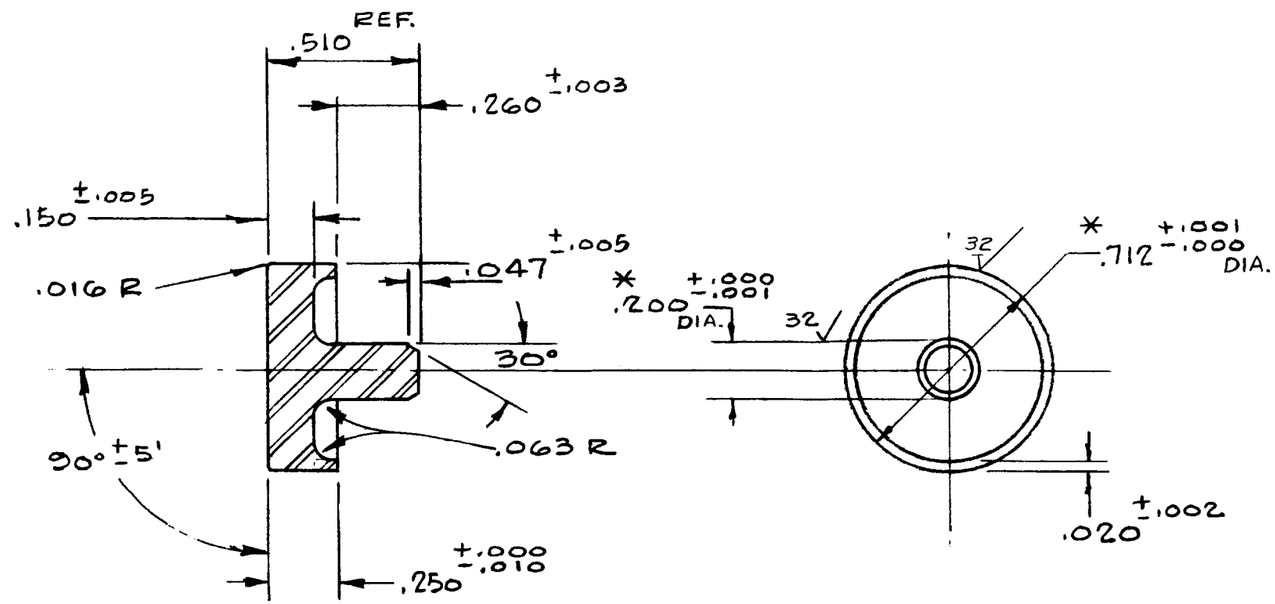

NOTES:

1. * THESE DIAMETERS TO BE CONCENTRIC WITHIN .001 T.I.R.
2. MATERIAL :- STAINLESS STEEL TYPE 304
3. NUMBER REQUIRED :- 10,500
4. SURFACE ROUGHNESS :- 63
5. BREAK SHARP EDGES :- .010 R. MAX.

ALLIS-CHALMERS
MANUFACTURING COMPANY
ATOMIC ENERGY DIVISION
NUCLEAR POWER DEPARTMENT
WASHINGTON, D. C.

EGCR-FUEL ASSEMBLY
BOTTOM END CAP

DWG.: SK.-MS-6

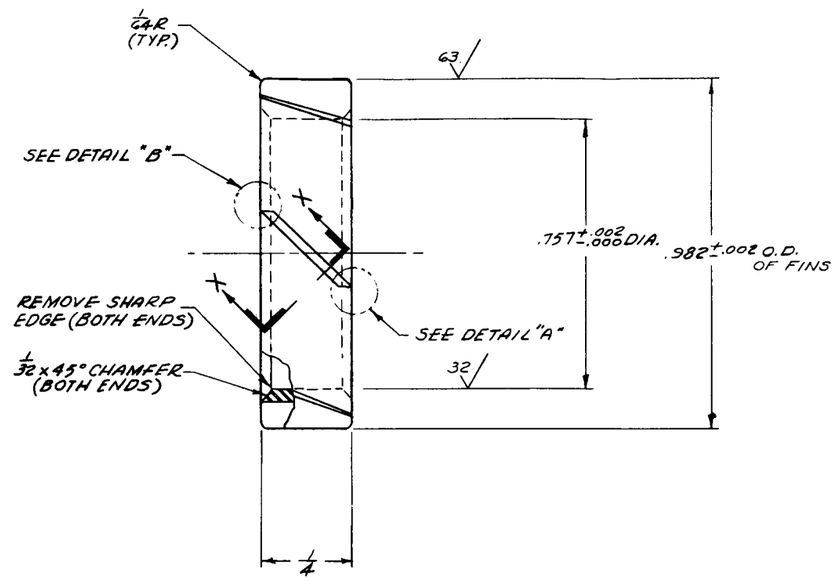

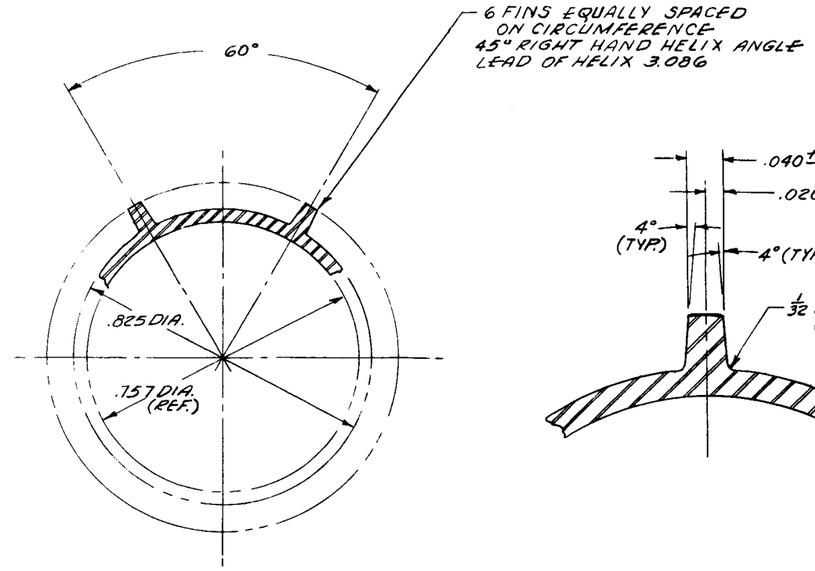

REF. SECTION TAKEN 90° TO HELIX ANGLE

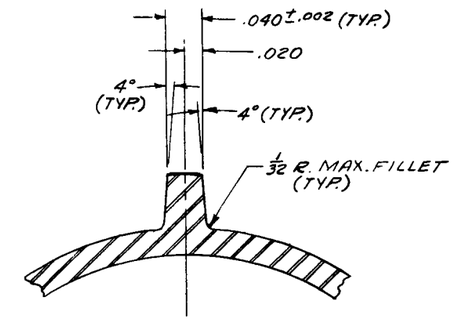

SECTION X-X
SCALE: 8=1

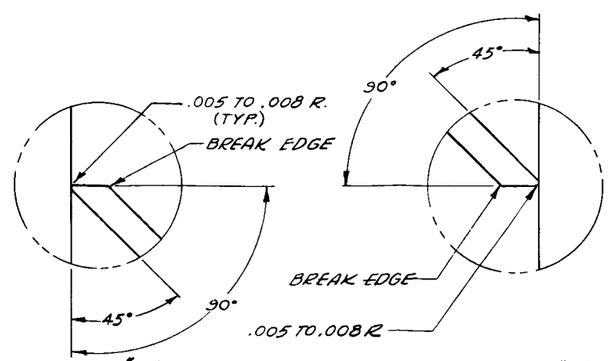

DETAIL "B"
SCALE: 8=1

DETAIL "A"
SCALE: 8=1

NOTES:

1. ALL DIAMETERS TO BE CONCENTRIC WITHIN .005 T.I.R.
2. SURFACE ROUGHNESS TO BE 125 RMS EXCEPT WHERE NOTED.
3. MATERIAL: STAINLESS STEEL - TYPE 304
4. No. REQUIRED - 10,500
5. BREAK SHARP EDGES - 1/64 R. MAX.
6. TOLERANCES:
   FRACTIONAL ± 1/64
   DECIMAL ± .005
   ANGLE ± 1/2°

ALLIS-CHALMERS
MANUFACTURING COMPANY
ATOMIC ENERGY DIVISION
NUCLEAR POWER DEPARTMENT
WASHINGTON, D. C.

EGCR - FUEL ASSEMBLY
HELICAL SPACER

DWG.: SK.-MS-7

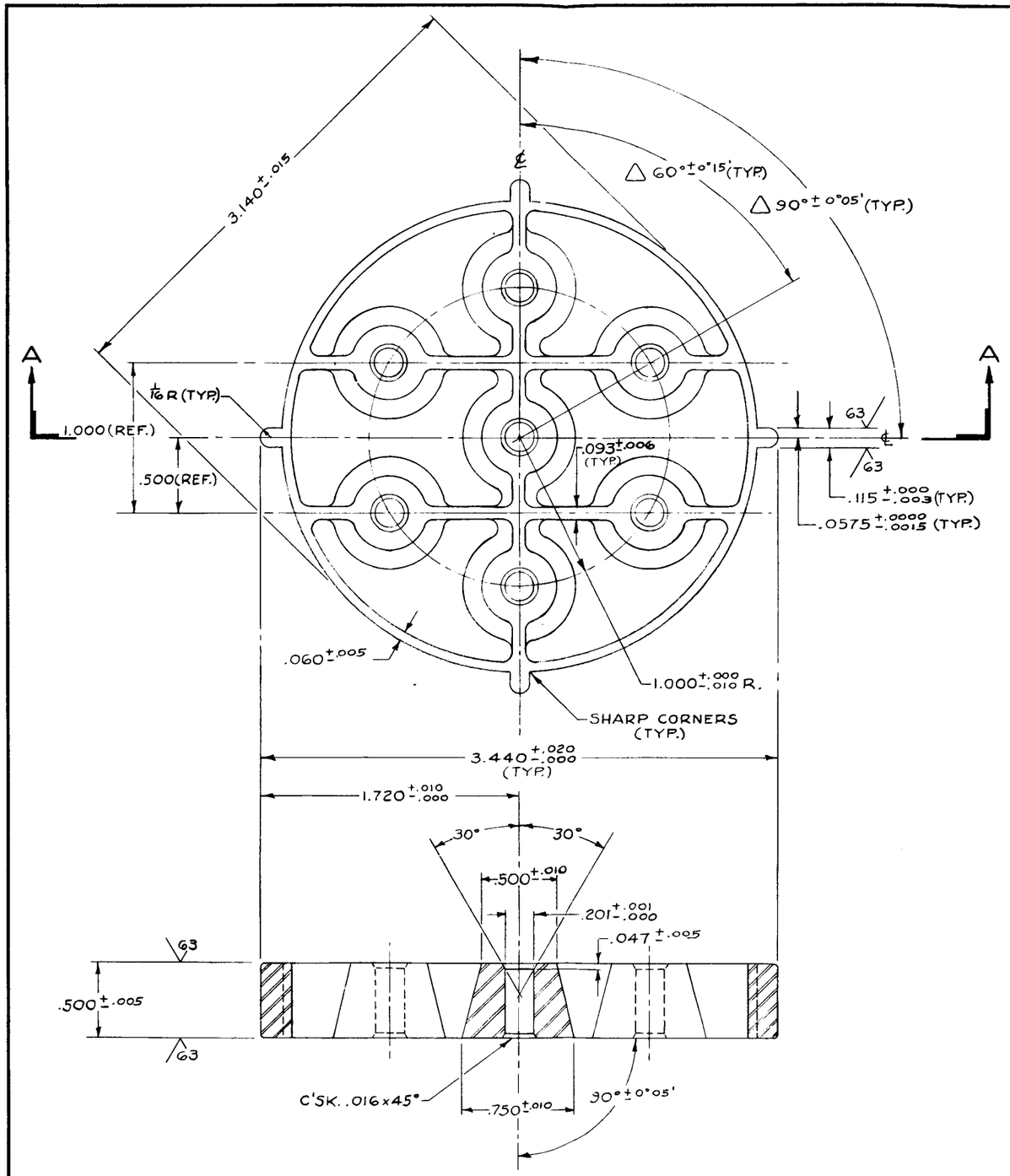

SECTION A-A

NOTES:

1. SURFACE ROUGHNESS 125 UNLESS OTHERWISE NOTED.
2. CASTING TO BE ANNEALED AT 1800-1900°F FOR ½ HOUR AND AIR COOLED BEFORE MACHINING.
3. △ THESE ANGULAR TOLERANCES ARE NOT CUMULATIVE.
4. MATERIAL - CASTING, STAINLESS STEEL TYPE 304
5. No. REQUIRED - 1500
6. BREAK SHARP EDGES - .010" R. MAX.
7. CAST FILLETS - .063" R. MAX.

ALLIS-CHALMERS
MANUFACTURING COMPANY
ATOMIC ENERGY DIVISION
NUCLEAR POWER DEPARTMENT
WASHINGTON, D. C

EGCR-FUEL ASSEMBLY
TOP SPIDER

DWG: SK-MS-3

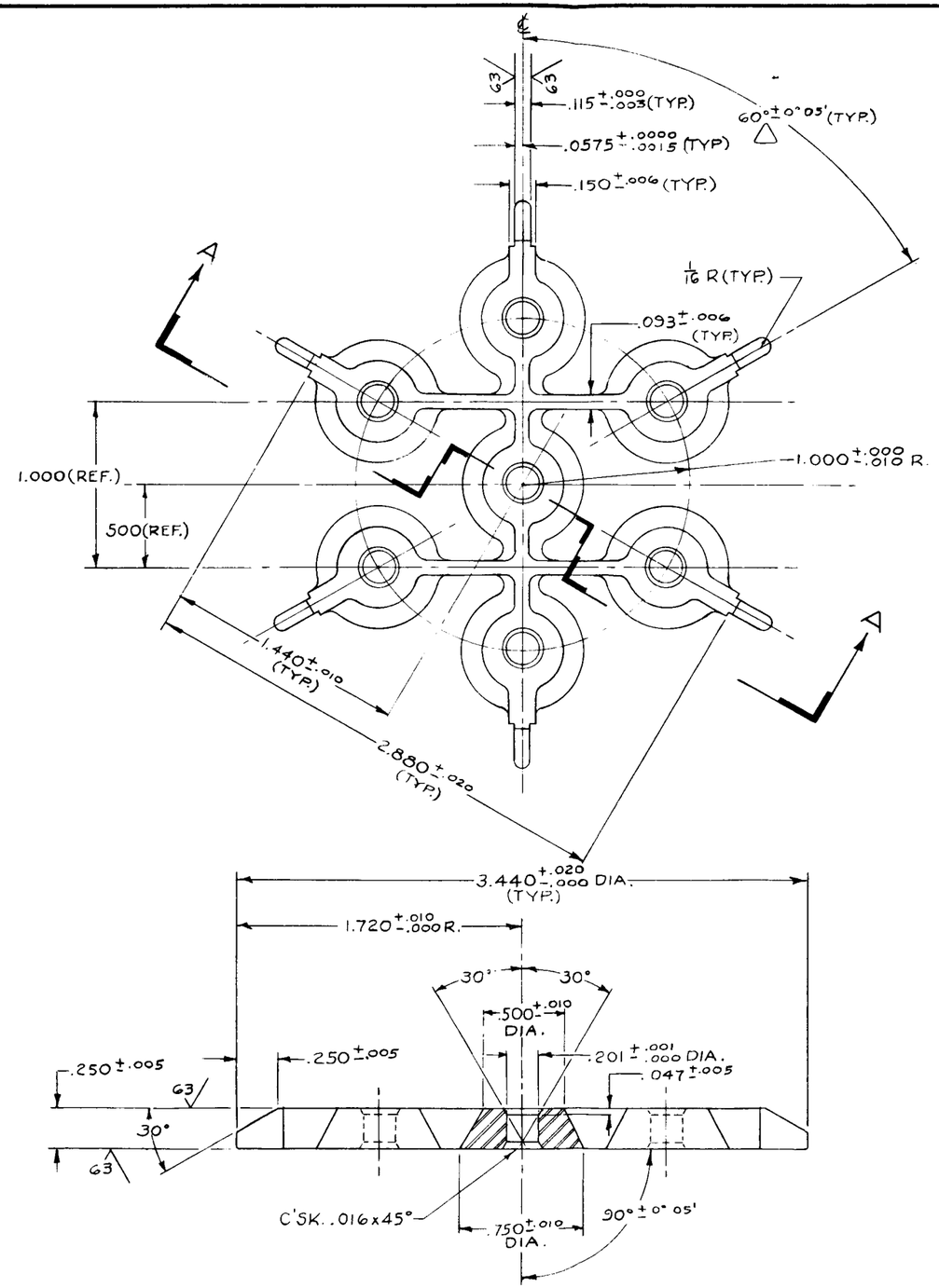

NOTES:

1. SURFACE ROUGHNESS 125 UNLESS OTHERWISE NOTED.
2. CASTING TO BE ANNEALED AT 1800-1900°F FOR ½ HOUR AND AIR COOLED BEFORE MACHINING.
3. △ THESE ANGULAR TOLERANCES ARE NOT CUMULATIVE.
4. MATERIAL - CASTING - STAINLESS STEEL TYPE 304
5. NUMBER REQUIRED - 1500
6. BREAK SHARP EDGES - .010 R. MAX.
7. CAST FILLETS - .063 R. MAX.

ALLIS-CHALMERS
MANUFACTURING COMPANY
ATOMIC ENERGY DIVISION
NUCLEAR POWER DEPARTMENT
WASHINGTON, D. C.

EGCR - FUEL ASSEMBLY
BOTTOM SPIDER

DWG: SK-MS-4

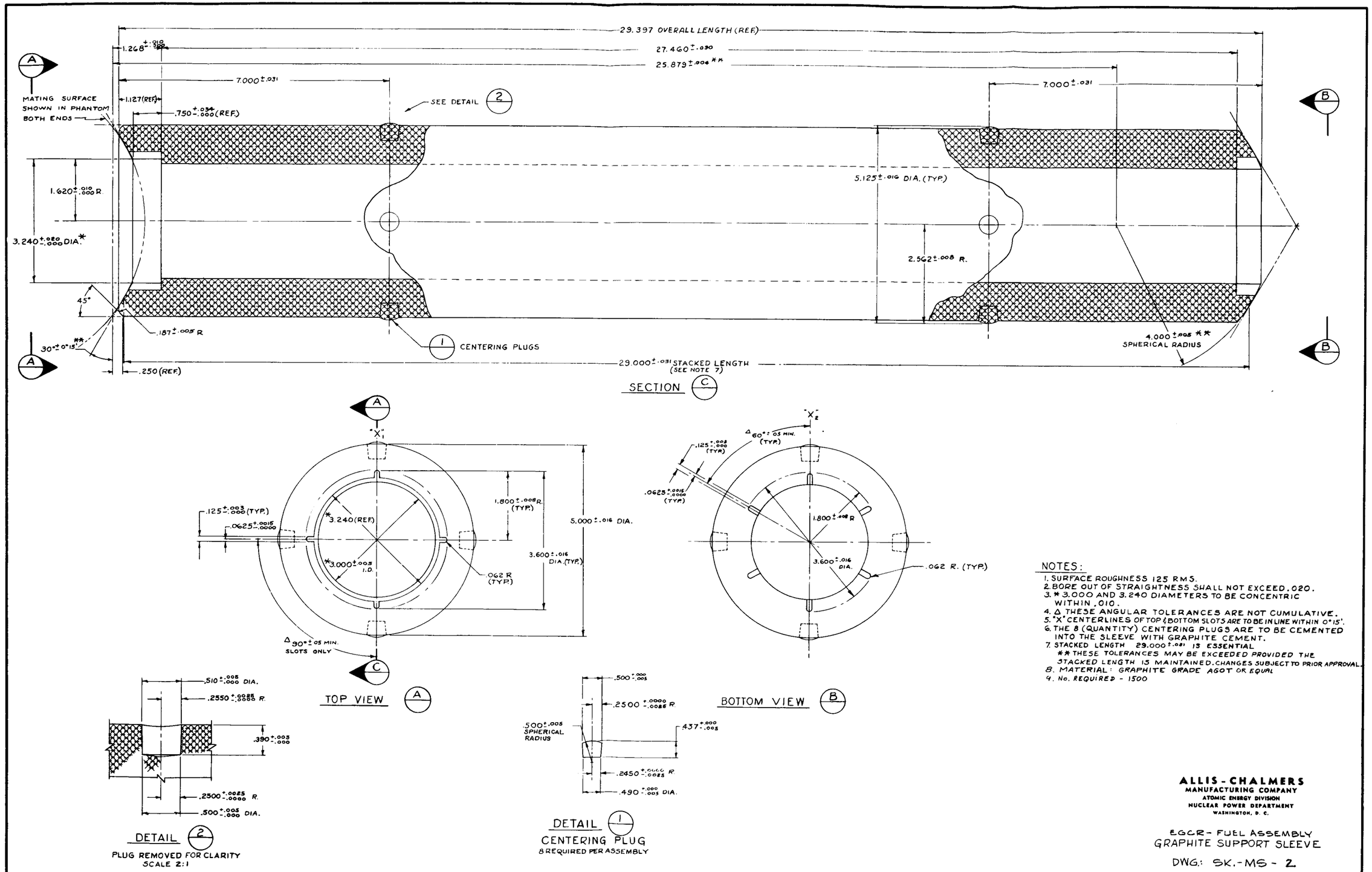

NOTES:

1. SURFACE ROUGHNESS 125 RMS.
2. BORE OUT OF STRAIGHTNESS SHALL NOT EXCEED .020.
3. * 3.000 AND 3.240 DIAMETERS TO BE CONCENTRIC WITHIN .010.
4. Δ THESE ANGULAR TOLERANCES ARE NOT CUMULATIVE.
5. "X" CENTERLINES OF TOP & BOTTOM SLOTS ARE TO BE IN LINE WITHIN 0°15'.
6. THE 8 (QUANTITY) CENTERING PLUGS ARE TO BE CEMENTED INTO THE SLEEVE WITH GRAPHITE CEMENT.
7. STACKED LENGTH 29.000 ±.031 IS ESSENTIAL
   ** THESE TOLERANCES MAY BE EXCEEDED PROVIDED THE STACKED LENGTH IS MAINTAINED. CHANGES SUBJECT TO PRIOR APPROVAL.
8. MATERIAL: GRAPHITE GRADE AGOT OR EQUAL
9. No. REQUIRED - 1500

ALLIS-CHALMERS
MANUFACTURING COMPANY
ATOMIC ENERGY DIVISION
NUCLEAR POWER DEPARTMENT
WASHINGTON, D. C.

EGCR- FUEL ASSEMBLY
GRAPHITE SUPPORT SLEEVE

DWG.: SK.-MS- 2

APPENDIX C

RECOMMENDED CHANGES

IN

SPECIFICATIONS

RECOMMENDED CHANGES IN SPECIFICATIONS

Procurement of components for the pilot manufacture of 50 Title I fuel assemblies revealed that the cost may be reduced by modifications in the specifications. These recommended changes are itemized in this section.

1. Tubing
   a. Increase the over-all length tolerance from $^{+\,0.005}_{-\,0.000}$ in. to $^{+\,0.015}_{-\,0.000}$ in.
   b. Change inside diameter from 0.710 $^{+\,0.002}_{-\,0.000}$ in. to 0.710 $^{+\,0.000}_{-\,0.002}$ in. to permit the tubing manufacturer to offer a lower base metal price. The outside diameter and inside diameter of the fuel pellet could be decreased accordingly without changing quantity of fuel in each pellet.
   c. Specify 320 grit finish on outside diameter rather than 500 grit. Adoption of "b" and "c" would reduce tubing costs approx $0.15/ft.
2. End Caps
   a. Change the surface finish specification to 63 rms instead of 32 rms.
   b. Change end cap outside diameter to give 0.001-in. interference fit with the tube.
3. Top Spider
   a. Increase the diametral tolerance on ring from ± 0.015 in. to ± 0.030 in. or greater. This can be achieved by increasing the counterbore diameter in the top end of the graphite sleeve.
   b. Change bottom diameter of truncated cone from 0.750 ± 0.010 in. to 0.710 ± 0.030 in. This permits increasing the tolerance on the concentricity of the hole with respect to the truncated cone.
   c. Broaden tolerance for top diameter of truncated cone from 0.500 ± 0.010 in. to 0.500 ± 0.050 in.
   d. Broaden tolerance of major diameter from projection tip to projection tip from 3.440 $^{+\,0.020}_{-\,0.000}$ to 3.440 ± 0.030 in.
   e. Remove surface finish requirement from top of casting, thus eliminating necessity for grinding.

RECOMMENDED CHANGES (continued)

f. Relax tolerance for thickness of casting from 0.500 ± 0.005 to $0.500 \begin{smallmatrix} +0.005 \\ -0.015 \end{smallmatrix}$ in.

g. Establish that holes must be concentric with center of truncated cones within 0.010 in.

4. Bottom Spider

a. Broaden tolerance of major diameter from projection tip to projection tip from $3.440 \begin{smallmatrix} +0.020 \\ -0.000 \end{smallmatrix}$ in. to 3.440 ± 0.030 in.

b. Remove surface finish requirement from top of casting, thus eliminating necessity for grinding top.

c. Change bottom diameter of truncated cone from 0.750 ± 0.010 in. to 0.710 in. ± 0.030 in.

d. Broaden tolerance on top diameter of truncated cone from 0.500 ± 0.010 in. to 0.500 ± 0.050 in.

e. Relax tolerance on thickness of casting from 0.500 ± 0.005 in. to $0.500 \begin{smallmatrix} +0.005 \\ -0.015 \end{smallmatrix}$ in.

f. Establish that holes must be concentric with center of truncated cone within 0.010 in.

5. Magnesium Oxide Insulators

a. Density specification of 2.2 ± 0.2 g/cc should be deleted. Higher density magnesium oxide is much less expensive and has sufficient insulating qualities.

b. Increase maximum calcium oxide from 0.1% to 0.2%

c. Increase maximum boron from 15 ppm to 20 ppm.

d. Change diameter from 0.700 ± 0.005 to 0.700 ± 0.007 in.

e. Change thickness to read 0.172 ± 0.005. This will permit relaxing length tolerance on tubing.

APPENDIX D

PROCESS SPECIFICATIONS

PROCESS SPECIFICATIONS

1. Brazing

Furnace Brazing

Equipment	Electric furnace, Globar type
Atmosphere	Dry hydrogen
Furnace temperature	1170°C
Time-to-reach temperature	5–8 min
Time at temperature	10 min
Time in cold zone	20–25 min
Method of jigging	Horizontal
Alloy	GE-81 powder, 200 mesh

Chemical composition:

C	0.25% (max)	P	0.03% (max)
Si	9.75–10.5%	Al	0.10% (max)
Cr	18.00–20.00%	Ti	0.10% (max)
Mn	1.00% (max)	Zr	0.10% (max)
S	0.03% (max)	Ni	balance

Quantity applied	Approx 1 g
Method of application	Slurry method using Nicrobraz cement[26] applied manually with eyedropper
Location of application	Both top and bottom of annulus
Method of jigging during application	Wooden block, see Fig. 3, p. 14
Drying time	1 hr

Induction Brazing

Equipment	
High-frequency induction unit	High-frequency unit, 30 kw, 440 v, 60 cycles, 75 amp
Induction coil	Copper
Tubing outside diameter	1/4 in.
Number turns	3
Diameter of coils	1-5/8-in.-i.d. (approx)

[26] Wall-Colmonoy Corporation, Detroit, Michigan.

PROCESS SPECIFICATIONS (continued)

Induction coil (continued)	
Coil length	3 in.
Container for tube	Quartz
Diameter	1-1/2-in.-o.d.
Length	35 in.
Wall thickness	1/16 in. (approx)
Atmosphere	Helium
Purging time	3–5 min prior to application of heat
Time that current is on	Approx 1-1/2 min
Cooling time	5 min

2. Welding of Bottom End Caps (welded in air)

Equipment	Rectifier, automatic high-frequency start
Polarity	Straight
Shielding gas	Argon
Gas flow rate[27]	20 ft^3/hr
Type electrode material	Thoriated tungsten
Electrode diameter	1/16 in.
Electrode tip geometry	Pointed, 60-deg angle
Protrusion of electrode beyond ceramic cup	1/8 to 3/16 in.
Drive speed	4 rpm
Current	17 amp
Rotation during weld	480 to 570 deg; arc decay starts after 360 deg
Open circuit voltage	82 v
Arc voltage	14 v

3. Welding of Top End Caps (welded in inert-atmosphere chamber)

Equipment	Rectifier, automatic high frequency
Polarity	Straight

[27] Argon started flowing 10 sec prior to arc and continued to flow 40 sec after arc was extinguished.

PROCESS SPECIFICATIONS (continued)

3. Welding of Top End Caps (continued)

Inert-atmosphere chamber	Helium at positive pressure
Shielding gas through torch	Argon
Shielding gas flow rate[28]	7–8 ft^3/hr
Rotation during weld	480 to 570 deg; decay starts after 360 deg
Type electrode material	Thoriated tungsten
Electrode diameter	1/16 in.
Electrode tip geometry	Pointed, 60-deg angle
Protrusion of electrode beyond ceramic cup	1/8 to 3/16 in.
Current	19 amp
Drive speed	5-1/2 rpm

4. Joining of Fuel Elements to Top and Bottom Spider

Method	Manual, inert-gas, tungsten-arc process, high-frequency start
Shielding gas	Argon
Gas flow rate	20 cfh
Type electrode	Thoriated tungsten
Electrode diameter	1/16 in.
Electrode geometry	Pointed
Electrode protrusion beyond ceramic cup	1/4 in.
Current	Top 85 amp; bottom 60 amp
Penetration obtained	0.040–0.045 in.
Power source	Rectifier, automatic, high frequency
Polarity	Straight
Open circuit voltage	82 v
Arc gap	0.030–0.045 in.

[28] Gas stops when arc is extinguished.

ORNL-2936
UC-81 - Reactors-Power
TID-4500 (15th ed.)

INTERNAL DISTRIBUTION

1. G. M. Adamson
2. S. A. Beall
3. R. J. Beaver
4. M. Bender
5. D. S. Billington
6. E. P. Blizard
7. A. L. Boch
8. C. J. Borkowski
9. W. F. Boudreau
10. G. E. Boyd
11. E. J. Breeding
12. J. C. Bresee
13. R. B. Briggs
14. W. E. Browning
15. C. E. Center (K-25)
16. R. A. Charpie
17. R. S. Cockreham
18. T. E. Cole
19–21. J. H. Coobs
22. J. A. Conlin
23. W. B. Cottrell
24. J. A. Cox
25. F. L. Culler
26. H. N. Culver
27. J. H. DeVan
28. D. A. Douglas
29. L. B. Emlet (K-25)
30. E. P. Epler
31. R. B. Evans
32. D. E. Ferguson
33. J. Foster
34. J. L. Fowler
35. A. P. Fraas
36. J. H. Frye, Jr.
37. G. A. Garrett (K-25)
38. A. E. Goldman
39. J. M. Googin (Y-12)
40. B. L. Greenstreet
41. W. R. Grimes
42. E. Guth
43. J. P. Hammond
44. W. O. Harms
45. R. F. Hibbs (Y-12)
46. T. Hikido
47–49. M. R. Hill
50. H. W. Hoffman
51. A. Hollaender
52. A. S. Householder
53. H. Inouye
54. W. H. Jordan
55. P. R. Kasten
56. G. W. Keilholtz
57. C. P. Keim
58. M. T. Kelley
59. J. J. Keyes
60. R. B. Korsmeyer
61. P. Lafyatis
62. J. T. Lamartine
63. J. A. Lane
64. S. A. Levin (K-25)
65. R. S. Livingston
66. H. G. MacPherson
67. W. D. Manly
68. E. R. Mann
69. R. W. McClung
70. H. E. McCoy
71. H. C. McCurdy
72. H. F. McDuffie
73. C. J. McHargue
74. F. R. McQuilkin
75. H. J. Metz
76. A. J. Miller
77. R. S. Miller
78. J. G. Morgan
79. K. Z. Morgan
80. J. P. Murray (Y-12)
81. F. H. Neill
82. M. L. Nelson
83. L. G. Overholser
84. N. Ozisik
85. P. Patriarca
86. F. S. Patton (Y-12)
87. A. M. Perry
88. D. Phillips
89. C. A. Preskitt
90. M. E. Ramsey

91–92. P. M. Reyling
93. M. W. Rosenthal
94. A. F. Rupp
95. G. Samuels
96. H. W. Savage
97. A. W. Savolainen
98. J. L. Scott
99. O. Sisman
100. E. D. Shipley
101. M. J. Skinner
102. G. M. Slaughter
103. A. H. Snell
104. I. Spiewak
105. E. Storto
106. R. D. Stulting
107. J. C. Suddath
108. C. D. Susano
109. J. A. Swartout
110. E. H. Taylor
111. D. F. Toner
112. W. C. Thurber
113. D. B. Trauger
114. E. Von Halle (K-25)
115. C. S. Walker
116. J. L. Wantland
117. G. M. Watson
118. A. M. Weinberg
119. M. E. Whatley
120. J. R. Weir
121. J. C. White
122–124. E. A. Wick
125. G. C. Williams
126. C. E. Winters
127. J. Zasler
128–131. ORNL – Y-12 Technical Library Document Reference Section
132–201. Laboratory Records Department
202. Laboratory Records Department, ORNL R. C.
203–205. Central Research Library

EXTERNAL DISTRIBUTION

206–208. W. F. Banks, Allis-Chalmers Mfg. Co.
209–211. P. D. Bush, Kaiser Engineers
212–213. H. Lichtenburger, General Nuclear Engineering Corp.
214. Division of Research and Development, AEC, ORO
215–723. Given distribution as shown in TID-4500 (15th ed.) under Reactors – Power category.