MARTIN MARIETTA ENERGY SYSTEMS LIBRARIES
3 4456 0361492 5

CENTRAL RESEARCH LIBRARY
DOCUMENT COLLECTION

ORNL-2941
UC-26 - Technology-Raw Materials

CONTROLLED pH STRIPPING OF URANIUM FROM AMINES

D. J. Crouse

CENTRAL RESEARCH LIBRARY
DOCUMENT COLLECTION
LIBRARY LOAN COPY
DO NOT TRANSFER TO ANOTHER PERSON
If you wish someone else to see this document, send in name with document and the library will arrange a loan.

OAK RIDGE NATIONAL LABORATORY
operated by
UNION CARBIDE CORPORATION
for the
U.S. ATOMIC ENERGY COMMISSION

Printed in USA. Price $0.75. Available from the

Office of Technical Services
Department of Commerce
Washington 25, D.C.

LEGAL NOTICE

This report was prepared as an account of Government sponsored work. Neither the United States, nor the Commission, nor any person acting on behalf of the Commission:

A. Makes any warranty or representation, expressed or implied, with respect to the accuracy, completeness, or usefulness of the information contained in this report, or that the use of any information, apparatus, method, or process disclosed in this report may not infringe privately owned rights; or

B. Assumes any liabilities with respect to the use of, or for damages resulting from the use of any information, apparatus, method, or process disclosed in this report.

As used in the above, "person acting on behalf of the Commission" includes any employee or contractor of the Commission, or employee of such contractor, to the extent that such employee or contractor of the Commission, or employee of such contractor prepares, disseminates, or provides access to, any information pursuant to his employment or contract with the Commission, or his employment with such contractor.

ORNL-2941

Contract No. W-7405-eng-26

CHEMICAL TECHNOLOGY DIVISION

Chemical Development Section C

CONTROLLED pH STRIPPING OF URANIUM FROM AMINES

D. J. Crouse

DATE ISSUED

MAY 31 1960

OAK RIDGE NATIONAL LABORATORY
Operated by
UNION CARBIDE CORPORATION
for the
U. S. ATOMIC ENERGY COMMISSION

MARTIN MARIETTA ENERGY SYSTEMS LIBRARIES

3 4456 0361492 5

ABSTRACT

A method for stripping uranium from amines by contacting the extract with an ammonium sulfate solution, while adjusting the pH to 3.5-4.5 with ammonium hydroxide, was developed through laboratory scale. Reagent costs are low (~7¢/lb U_3O_8) and the product is a high-assay, sodium-free (or low sodium) concentrate. However, separations from molybdenum are relatively poor, and somewhat more careful control is required than in certain other available stripping methods.

Batch stripping tests demonstrated the strong dependence of the stripping efficiency on pH, stripping of Alamine 336 being relatively difficult below pH 4. Two other tertiary amines, tri(iso-octyl) and XE-204, were stripped better, and a branched secondary amine, bis(1-nonyldecyl), poorer than Alamine 336. Increasing the sulfate concentration of the strip solution in the range 1-2 M improved the stripping efficiency slightly.

In continuous runs with Alamine 336, some emulsion troubles were encountered at pH ~4 although stripping was effective. In the pH range 3.3-3.8, physical operation was satisfactory but stripping was ineffective, relatively large amounts of uranium reporting to the molybdenum stripping circuit.

CONTENTS

		Page
1.0	INTRODUCTION	4
2.0	BATCH STRIPPING TESTS	4
	2.1 Effect of pH and Amine Choice	5
	2.2 Effect of Sulfate Concentration	9
3.0	CONTINUOUS RUNS	9
	3.1 Preparation of Uranium Products	16
	3.2 Recovery of Uranium from Carbonate Strip Solution	16
4.0	ESTIMATED REAGENT COSTS	18
5.0	DISCUSSION	18
6.0	REFERENCES	21
7.0	APPENDIX	22
	7.1 Description of the Amine Reagents	22
	7.2 Equipment Design	22

1.0 INTRODUCTION

This report describes bench-scale studies on recovering uranium from tertiary amine extracts with ammonium sulfate solutions at a controlled pH. Studies at the Canadian Department of Mines and Technical Surveys[1,2] have demonstrated the feasibility of stripping tri(iso-octyl)amine with sodium sulfate solutions, while adjusting the pH to 4-5 with sodium hydroxide. Examination of this stripping method was continued[3] at Oak Ridge National Laboratory for several reasons. First, the effectiveness of separation from molybdenum, which is a common constituent of western ores, had not been studied. Second, investigation of the ammonium rather than the sodium system was desirable since ammonia is a cheaper base than caustic and since sodium-free concentrates are more amenable to the direct reduction-hydrofluorination-fluorination flowsheet used in the new Allied Chemical Company feed plant. Finally, it was desirable to investigate the amenability of other available tertiary amines to this stripping method.

In batch stripping tests, the performances of several amines were compared and the effects of pH and sulfate concentration were evaluated. Several continuous runs were made with one tertiary amine to study the effect of pH variation on chemical and physical operation of the circuit. Reagent costs were estimated on the basis of the continuous tests.

The batch tests were performed by W. D. Arnold and the continuous tests by R. S. Lowrie with C. H. Tipton and F. G. Kilpatrick assisting.

2.0 BATCH STRIPPING TESTS

The basicities of the amine extractants vary with amine class—primary > secondary > tertiary— and, within each class, decrease with increasing alkyl branching.[4-6] The weaker-base compounds, i.e., the tertiaries and those secondaries with branching close to the nitrogen, are more amenable to the controlled pH stripping method than the primary or the less-branched secondary amines. Hydrolysis of the tertiary amines is >90% complete at pH 4 (Fig. 2.1). The uranium transferred to the aqueous phase at this pH remains in solution:

$$\underline{(R_3NH)_4UO_2(SO_4)_3} + 4NH_4OH \rightarrow UO_2SO_4 + 2(NH_4)_2SO_4 + 4\underline{R_3N} + 4H_2O \quad (1)$$

and

$$\underline{(R_3NH)_2SO_4} + 2NH_4OH \rightarrow (NH_4)_2SO_4 + 2\underline{R_3N} + 2H_2O \quad (2)$$

(The dotted underlines mark species in the organic phase.) With the primary and less-branched secondary amines, the pH must be raised to an appreciably higher level to obtain sufficient hydrolysis of the amine salt. At these higher pH levels, uranium is precipitated, usually resulting in phase separation difficulties.

Curves for titration with ammonium hydroxide of two uranium-loaded tertiary amines, Alamine 336 and XE-204, show the former compound to be the stronger base (Fig. 2.2). Formation of precipitate and emulsions did not occur in these tests until the pH was raised above ~4.7.

2.1 Effect of pH and Amine Choice

Stripping isotherms (Fig. 2.3) were obtained for Alamine 336 at four different pH's and for XE-204, tri(iso-octyl)-amine, and bis(1-nonyldecyl)amine at a single pH. Phase separation in all tests with the tertiary amines was rapid (0.5-1.5 min), but was relatively slow (2-3 min) with bis(1-nonyldecyl)amine. Ammonium sulfate* (1.5 M) was added to the strip solution to improve uranium distribution to the aqueous phase. All the isotherms have a characteristic concave shape, the slope of the isotherm decreasing as it approaches the origin. In a countercurrent system, this low slope in the dilute uranium region causes pinching between the equilibrium and operating lines, making complete** stripping of the solvent difficult. The data for Alamine 336 emphasizes the importance of pH. At pH 3.1-3.3, stripping was too inefficient to be of interest. Increasing the pH (by increasing the amount of ammonium hydroxide added to the system) increased the isotherm slope, particularly in the dilute uranium region. Using the isotherm data, stage requirements for reducing the uranium content of the organic to a given level were estimated by McCabe-Thiele diagrams, assuming loading of the strip solution to 15 g of uranium per liter (Fig. 2.4). The results show that only about 87% of the uranium could be stripped from Alamine 336 at pH 3.5-3.7 in three ideal stripping stages. Owing to severe pinch-

---

*Both the stripping and precipitation reactions produce ammonium sulfate, which accumulates in the strip solution, if it is recycled after uranium precipitation (Fig. 3.1).

**Complete stripping of the solvent, although desirable, is not necessary since uranium distribution coefficients in the bottom extraction stage are usually sufficiently high that appreciable recycle of uranium in the stripped solvent can be tolerated without adversely affecting uranium recoveries. Also, the flowsheet (Fig. 3.1) for treating molybdenum-containing liquors provides additional stripping of uranium in a carbonate strip cycle.

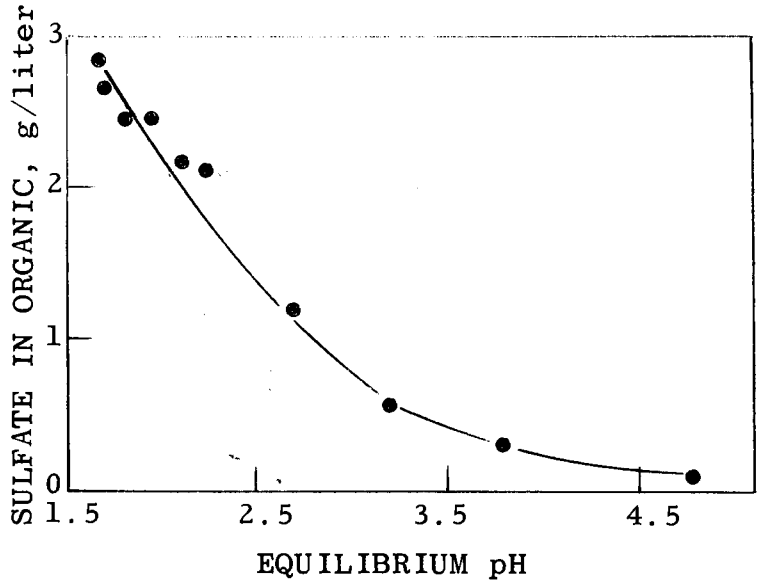

Fig. 2.1 Extraction of sulfuric acid by 0.06 M Alamine 336 in 97% kerosene—3% tridecanol. Aqueous: $(NH_4)_2SO_4$-H_2SO_4, total $SO_4^=$ 1.5 M.

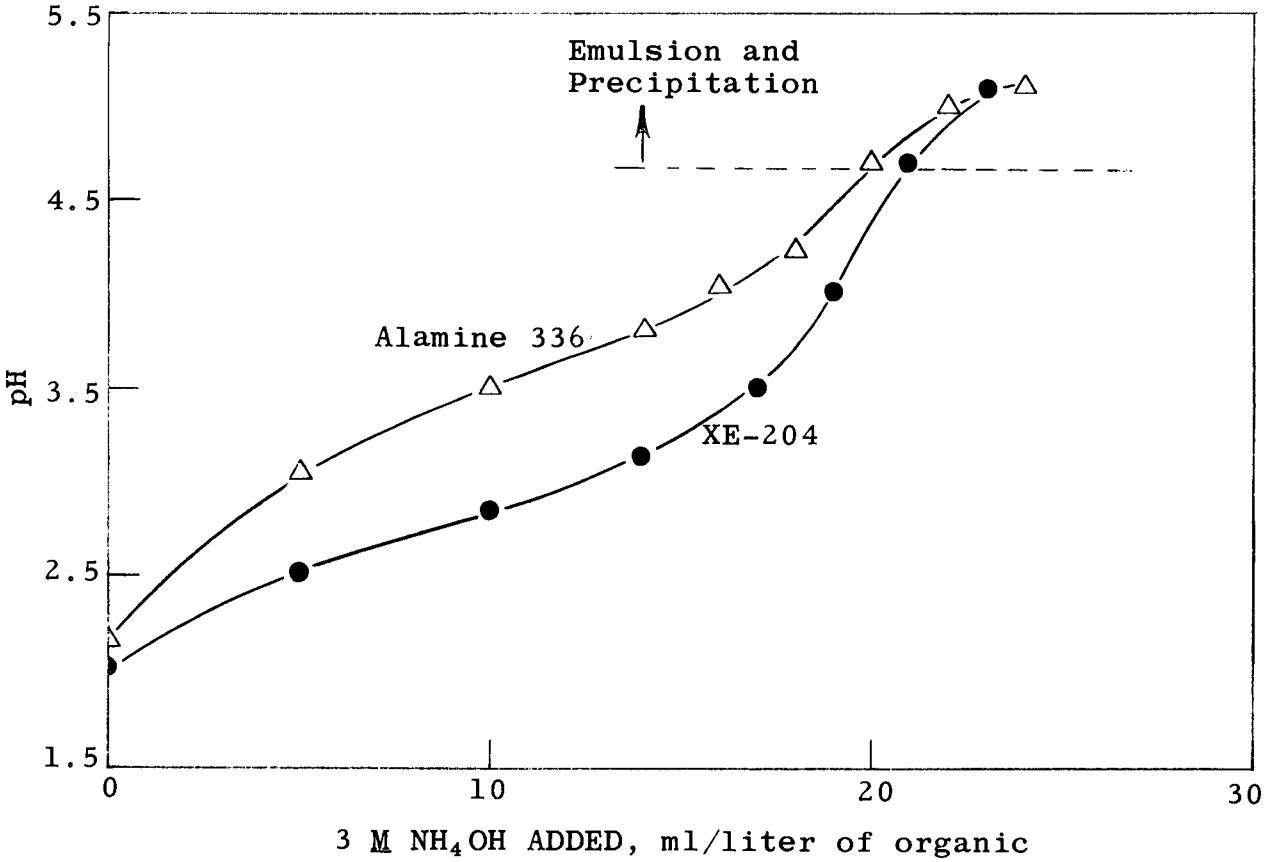

Fig. 2.2. Titration of amine extracts with ammonia. Organic: 0.06 M amine in 97% kerosene—3% tridecanol loaded with 2.8 g of uranium per liter. Procedure: extract contacted with 1.5 M $(NH_4)_2SO_4$ solution at organic/aqueous phase ratio of 10/1; ammonium hydroxide added in increments; phases recontacted and pH measured after each increment addition.

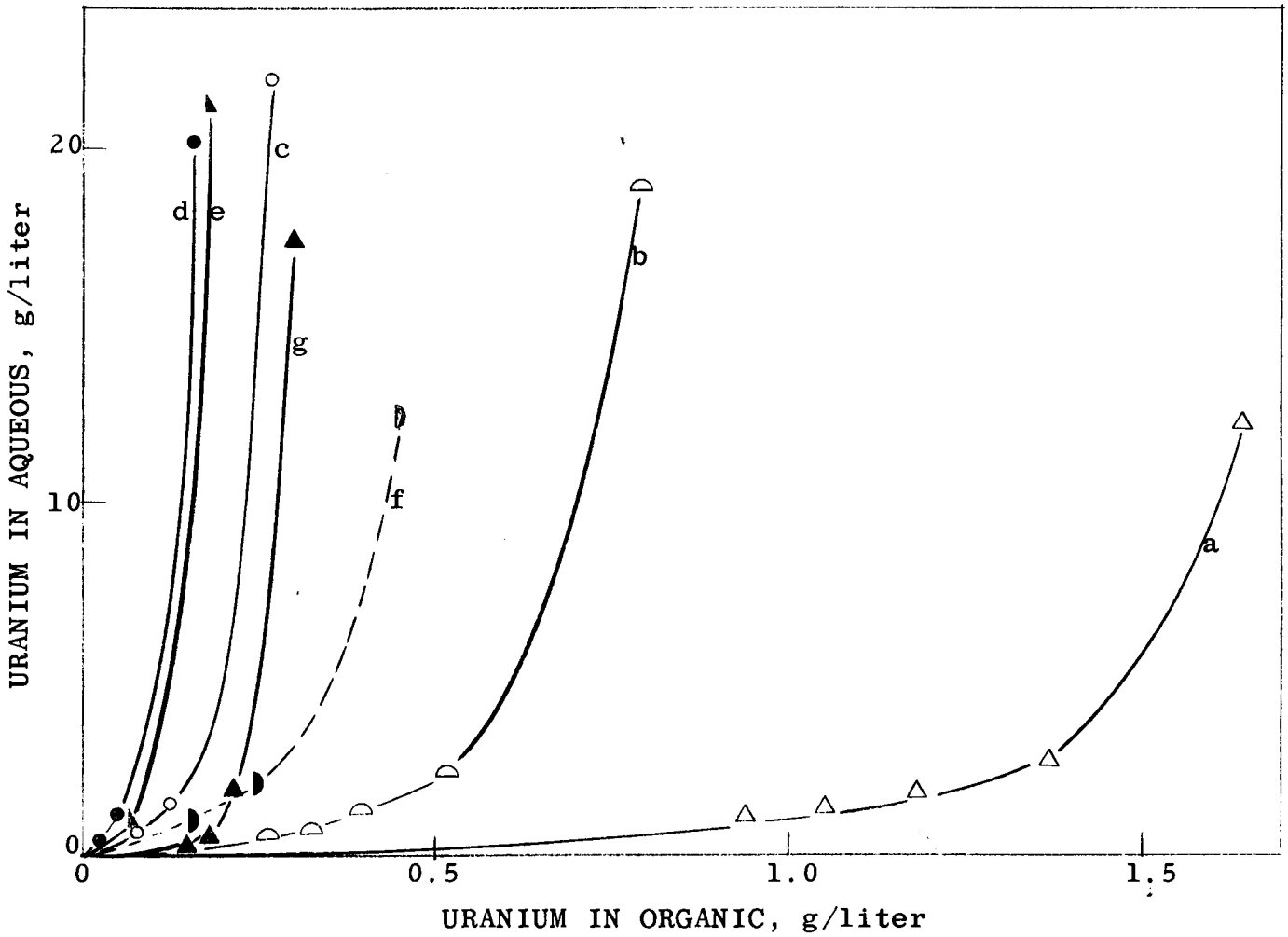

Fig. 2.3. Uranium stripping isotherms. Organic: 0.06 M amine in 97% kerosene—3% tridecanol loaded to 2.8 g of uranium per liter. Procedure: organic cascaded against fresh volumes of aqueous NH_4OH—1.5 M $(NH_4)_2SO_4$ solution for first contact, 1.5 M $(NH_4)_2SO_4$ (initial pH 5.3) solution for subsequent contacts. In the pH range shown for each test, the higher pH was obtained on the first contact and the lower pH on subsequent contacts.

a) Alamine 336, pH 3.1-3.3
b) Alamine 336, pH 3.6-3.7
c) Alamine 336, pH 3.9-4.0
d) Alamine 336, pH 4.2-4.3
e) XE-204, pH 3.6-3.8
f) tri(iso-octyl), pH 3.3-3.4
g) bis(1-nonyldecyl) in 97% kerosene—1% tridecanol, pH 3.9-4.0

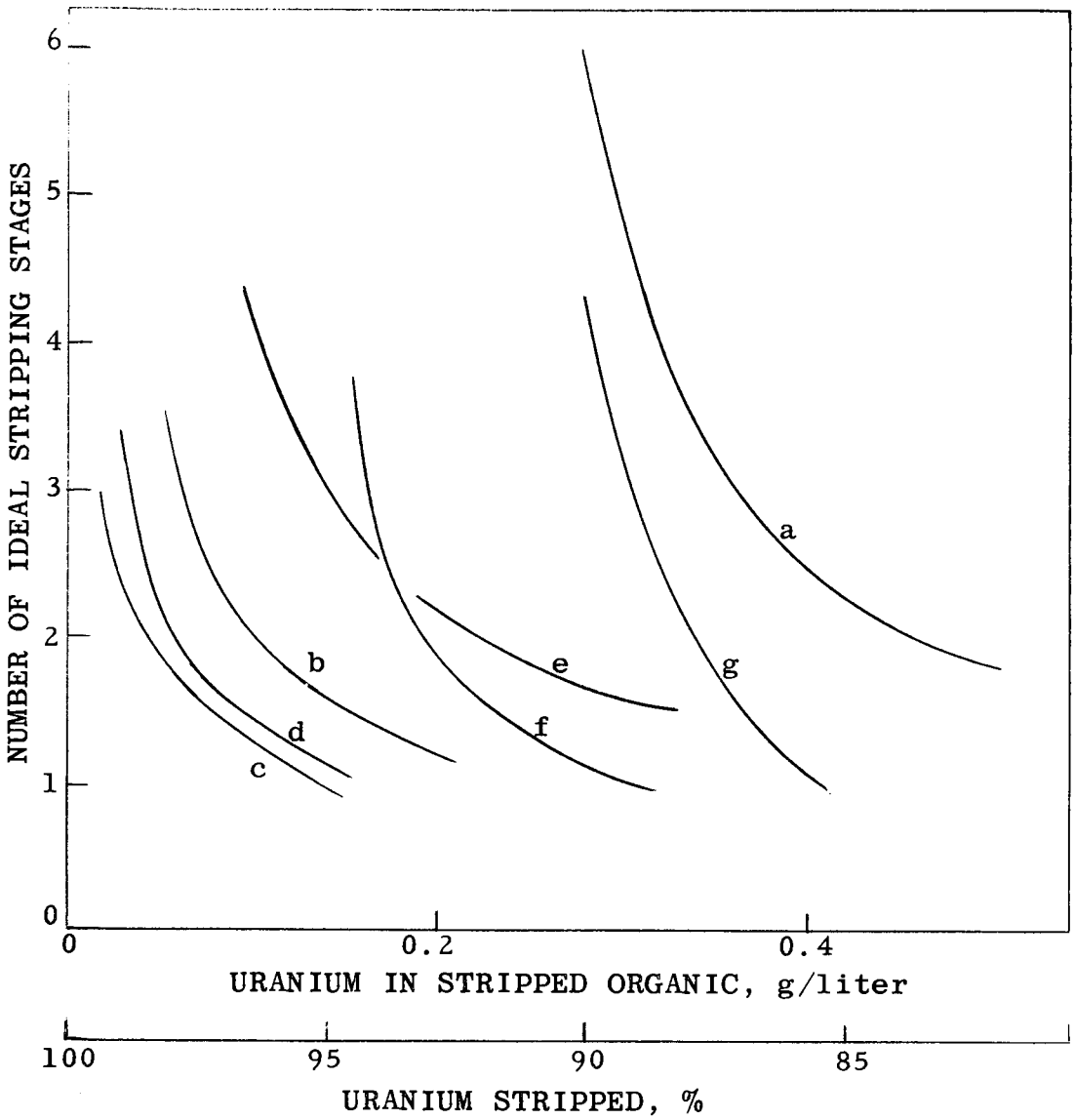

Fig. 2.4. Stage requirements for stripping uranium. Estimated with McCabe-Thiele diagrams using isotherm data (Fig. 2.3) and assuming solvent loading of 2.8 g of uranium per liter and strip solution loading of 15 g of uranium per liter.

a) Alamine 336, pH 3.5-3.7
b) Alamine 336, pH 3.9-4.0
c) Alamine 336, pH 4.2-4.3
d) XE-204, pH 3.6-3.8
e) tri(iso-octyl)amine, pH 3.3-3.4
f) bis(1-nonyldecyl)amine, pH 3.9-4.0
g) Alamine 336, pH 3.5-3.7 (assuming strip solution loading to 10 g of uranium per liter)

ing between the equilibrium and operating lines, doubling the number of stages would increase uranium recovery from the solvent to only ~90%. Likewise, increasing the strip solution flow, to reduce loading to 10 g of uranium per liter, would increase the amount of uranium stripped in three stages to only ~89%. However, >96% stripping would be obtainable at pH 3.9-4.0 and >98% stripping at pH 4.2-4.3 in only two ideal stripping stages. Both XE-204 and tri(iso-octyl)amine were stripped more easily than Alamine 336. The results with XE-204 at pH 3.6-3.8 were essentially equivalent to those of Alamine 336 at pH 4.2-4.3, and tri(iso-octyl)amine was stripped more readily at pH 3.3-3.4 than was Alamine 336 at pH 3.5-3.7. Bis(1-nonyldecyl)amine was more difficult to strip than the tertiary amines.

2.2 Effect of Sulfate Concentration

Increasing the sulfate concentration in the strip solution from 1 to 2 M increased the stripping efficiency slightly (Fig. 2.5). Small differences in pH in the three tests tended to mask the effect of sulfate concentration, since pH is a much more important variable.

3.0 CONTINUOUS RUNS

Five continuous runs (Table 3.1), each of approximately 7 hr duration, were made with Alamine 336 to study the effect of pH variation on the stripping efficiency and physical operation of the stripping circuit. Uranium recovery was >99.8% in all runs, but operation of the stripping circuit was not entirely satisfactory. When the pH was

Table 3.1 Summary of Operating Conditions for Continuous Runs

Organic: Alamine 336 in 97% kerosene—3% tridecanol
Aqueous feed flow rate: 800 ml/min; in Runs 2-4, aqueous was recycled from the settler to the mixer of the first stripping stage at the rate of 140 ml/min
Sodium carbonate flow rate: 50 ml/min
Scrub water flow rate: 40 ml/min

Run No.	Amine Conc., M	Flow Rate, ml/min			
		Organic	Ammonium Sulfate Recycle	3 M NH_4OH To First Stripping Stage	3 M NH_4OH To Precipitator
1	0.10	200	25	Varied	Varied
2	0.10	200	40	4.8	2.4
3	0.06	330	40	5.0	3.2
4	0.06	330	50	4.7	3.3
5	0.06	330	50	5.7	2.7

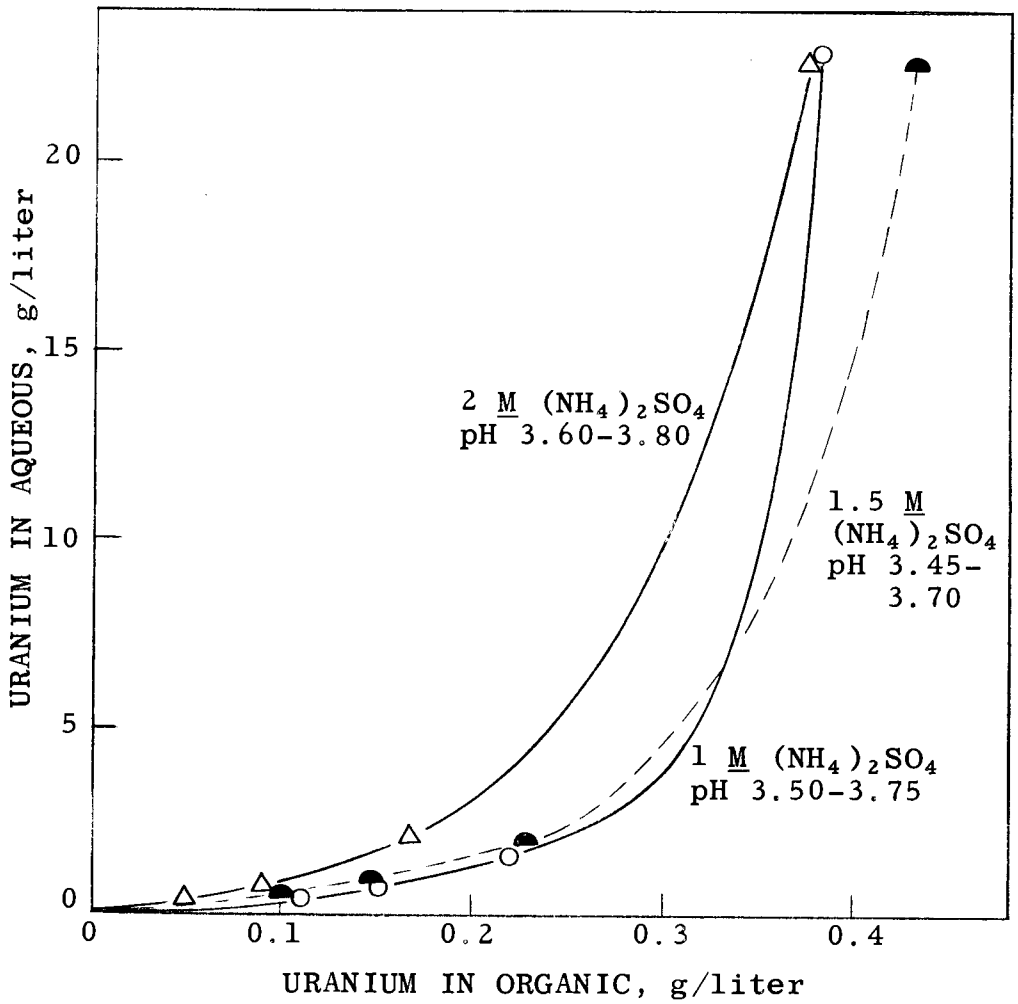

Fig. 2.5. Effect of sulfate concentration on stripping. Organic: 0.06 M Alamine 336 in 97% kerosene—3% tridecanol, loaded to 2.7 g of uranium per liter. Organic cascaded against fresh volumes of aqueous ammonium hydroxide—ammonium sulfate solution for first contact, ammonium sulfate solution for subsequent contacts.

controlled at ~4.0, stripping was efficient but phase separation was poor. In the pH range 3.6-3.8, physical operation was satisfactory but the stripping efficiency was poor, relatively large amounts of uranium entering the secondary stripping circuit. Also, separations from molybdenum during stripping, particularly at the higher pH, were not efficient.

The total circuit (Fig. 3.1) included three extraction stages, one scrub stage, three uranium stripping stages, one molybdenum stripping stage, and equipment for continuous precipitation and filtration of uranium from the loaded

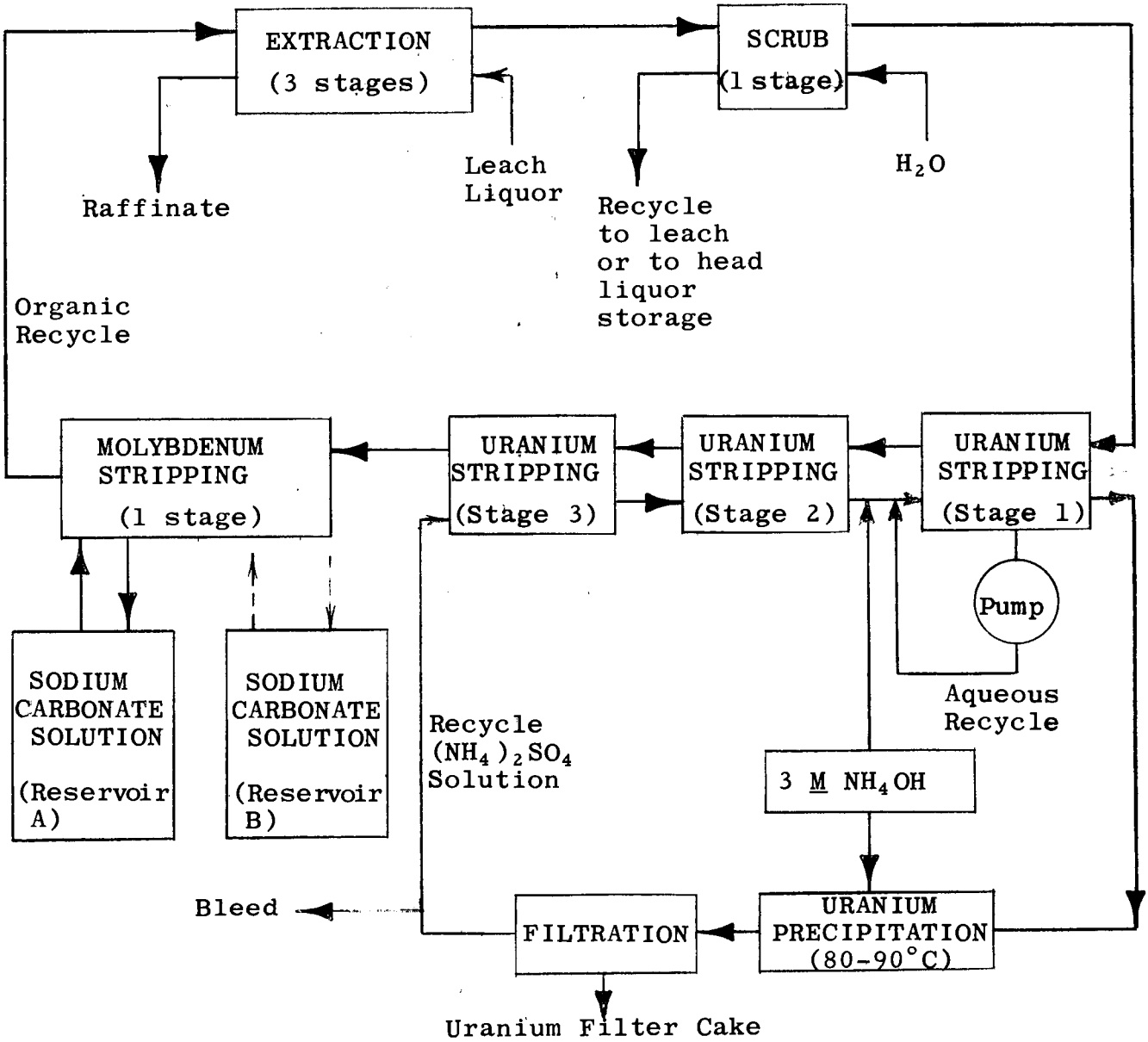

Fig. 3.1 Flow diagram for continuous runs. Organic: 0.06 M or 0.10 M Alamine 336 in 97% kerosene—3% tridecanol.

strip liquor. Mixer-settlers were used for contacting the phases. Uranium was extracted from a synthetic leach liquor (pH 1.0) containing, in grams per liter: 1.23 U, 0.7 V(IV), 0.036 Mo, 1.0 Fe(II), 2.3 Fe(III), 2.3 Al, 0.9 PO_4, and 45 SO_4. The extract was scrubbed with water, primarily to remove entrained liquor. The water scrub had the additional advantage of removing a small amount of extracted sulfuric acid from the solvent, which slightly decreased base requirements for stripping. Uranium was stripped from the scrubbed extract with 1.2-1.6 M $(NH_4)_2SO_4$ solution while adjusting the pH to the desired level with 3 M NH_4OH which was pumped to the first stripping stage. The pH was automatically recorded on a Brown recorder but control of the pump was manual. Uranium was precipitated continuously, by adjusting the strip solution pH to 7-7.5 with 3 M NH_4OH, and filtered, the filtrate being recycled to the stripping operation. Operation of the precipitator at 80-90°C gave a rapidly filtering precipitate and a clear filtrate, whereas a colloidal precipitate was obtained at ambient temperatures. The stripped solvent was contacted with sodium carbonate solution to remove molybdenum. This treatment also stripped residual uranium and prevented excessive uranium recycle to the extraction system during periods when operation of the uranium stripping system was inefficient. The sodium carbonate supply was replenished on a batch basis. Solution was recycled between one of two reservoirs (initially filled with 1 M Na_2CO_3) and the molybdenum stripping system until the solution pH fell to an arbitrary value, e.g., ~8, at which point the reservoir was cut out of the circuit in favor of the second reservoir which contained fresh 1 M Na_2CO_3.

Run 1. This was a preliminary shakedown run (with 0.10 M Alamine 336), in which the pH in the uranium stripping system was varied from 3.3 to 4.5 by changing the rate of ammonia flow to the first stripping stage. Initially, the stripping and precipitation systems were filled with 1.2 M $(NH_4)_2SO_4$. During the first part of the run, ammonium hydroxide was fed to the top of the first stage mixer, but efficiency in this stage was poor. The stage efficiency was improved considerably by recycling aqueous from the settler to the mixer and by blending the ammonium hydroxide feed with this recycle stream and with aqueous coming from the second stage. This caused copious precipitation of uranium so that the aqueous feed to the first stage mixer was actually a precipitate slurry. Essentially all this precipitate, however, dissolved on contact with the amine salt.

No data are presented for Run 1 since steady-state operation was not attained.

Run 2 (Table 3.2). In this run (with 0.10 M Alamine 336), the pH in the first stripping stage was controlled at

Table 3.2 Data for Continuous Run 2

(System sampled at shutdown)

Stage No.	Analysis, g/liter Organic U	Organic Mo	Organic SO_4	Aqueous U	Aqueous Mo	Aqueous SO_4	pH
Extraction System							
1	5.2	0.11	-	0.026	0.035	-	-
2	1.28	0.10	-	0.006	0.017	-	-
3	0.22	0.050	-	<0.001	0.012	-	-
Scrub							
1	5.0	0.11	-	0.079	0.002	-	-
Uranium Stripping							
1	1.24	0.079	-	17.4	0.15	-	3.8
2	0.98	0.081	-	2.7	0.008	-	3.6
3	0.66	0.082	-	1.37	0.006	-	3.5
Solution recycled from filter				0.005	0.013	178	7.3
Molybdenum Stripping[a]							
1	0.078	0.010	-	13.6	1.43	-	8.6

[a]Since sodium carbonate addition to this circuit was batchwise, these are not steady-state data.

~3.8, resulting in a pH of ~3.6 in the second stage and ~3.5 in the third stage. Physical operation throughout the run was smooth but only 87% of the extracted uranium was stripped in the uranium stripping section. However, most of the remaining uranium was removed, along with the molybdenum, by the carbonate strip. A fresh supply of sodium carbonate solution was cut into the circuit when the pH of the carbonate recycle solution fell to ~9. This required frequent changing of the reservoirs, and sodium carbonate consumption (based on uranium recovered from the feed liquor) was relatively high, i.e., ~0.9 lb per pound of U_3O_8.

Run 3 (Table 3.3). In this and subsequent runs the organic phase consisted of 0.06 M Alamine 336 in 97% kerosene—3% tridecanol. The pH in the first stripping stage was controlled at ~3.6. Physical operation of the system was smooth but only ~80% of the uranium was stripped in the uranium stripping section; the balance accumulated in the carbonate strip liquor. The carbonate reservoirs were changed when the carbonate recycle solution pH dropped to ~8. Sodium carbonate consumption was ~0.5 lb per pound of U_3O_8.

Table 3.3 Data for Continuous Run 3

(System sampled at shutdown)

Stage No.	Analysis, g/liter						
	Organic			Aqueous			
	U	Mo	SO_4	U	Mo	SO_4	pH
Extraction System							
1	2.8	0.057	-	0.40	0.035	-	1.1
2	1.2	0.056	-	0.008	0.024	-	1.1
3	0.20	0.037	-	0.002	0.016	-	1.1
Scrub							
1	2.8	0.055	-	0.103	0.005	-	1.6
Uranium Stripping							
1	0.87	0.041	1.2	16.5	0.098	140	3.6
2	0.75	0.043	1.2	3.2	0.008	139	3.3
3	0.55	0.043	1.0	1.52	0.003	140	3.3
Solution recycled from filter				0.02	0.007	146	6.8
Molybdenum Stripping[a]							
1	0.004	0.014	<0.1	18.0	1.11		

[a]Since sodium carbonate addition to this circuit was batchwise, these are not steady-state data.

Run 4 (Table 3.4). The pH in the first stripping stage was controlled at ~3.6 and the ammonium sulfate solution flow was increased by ~25% over that used in runs 2 and 3. Physical operation of the system was smooth throughout the run but uranium removal in the stripping system was only 84%. Consumption of sodium carbonate (reservoirs changed when pH of recycle solution dropped to 7.5) was ~0.5 lb per pound of U_3O_8.

Run 5 (Table 3.5). The pH in the first stripping stage was controlled at 4.0-4.1, resulting in pH's of 3.5-3.6 in stages 2 and 3. About 98% of the uranium was stripped in the uranium stripping section, but physical operation was not satisfactory. Slow-breaking emulsions accumulated in all the uranium stripping settlers, and near the end of the run the settlers began flooding. Flooding was prevented and the operation continued for some time by intermittent application of a high-frequency electrical potential[7] from a spark coil to speed phase separation. Aqueous entrainment in the solvent leaving the third stripping stage was high, but most of

Table 3.4 Data for Continuous Run 4

(System sampled at shutdown)

Stage No.	Analysis, g/liter						pH
	Organic			Aqueous			
	U	Mo	SO_4	U	Mo	SO_4	
Extraction System							
1	3.0	0.062	-	0.30	0.038	-	1.0
2	0.72	0.063	-	0.021	0.023	-	1.2
3	0.11	0.034	-	<0.001	0.017	-	1.2
Scrub							
1	2.9	0.064	-	0.11	0.003	-	1.6
Uranium Stripping							
1	0.90	0.047	1.2	12.9	0.064	151	3.6
2	0.72	0.045	1.1	2.6	0.009	151	3.3
3	0.47	0.043	0.9	1.33	0.008	151	3.3
Solution recycled from filter				0.001	0.007	152	7.2
Molybdenum Stripping[a]							
1	0.006	0.009	<0.1	16.9	1.7	-	8.0

[a]Since sodium carbonate addition to this circuit was batchwise, these are not steady-state data.

Table 3.5 Data for Continuous Run 5

(System sampled at shutdown)

Stage No.	Analysis, g/liter						pH
	Organic			Aqueous			
	U	Mo	SO_4	U	Mo	SO_4	
Extraction System							
1	2.90	0.060	-	0.22	0.034	-	1.0
2	0.40	0.055	-	0.008	0.023	-	1.1
3	0.05	0.032	-	<0.001	0.017	-	1.2
Scrub							
1	2.9	0.057	-	0.055	0.002	-	1.6
Uranium Stripping							
1	0.23	0.018	0.36	13.6	0.18	151	4.1
2	0.14	0.025	0.37	1.78	0.11	153	3.5
3	0.052	0.028	0.28	0.60	0.009	154	3.6
Solution recycled from filter				0.007	0.023	155	-
Molybdenum Stripping[a]							
1	<0.001	<0.001	<0.1	5.1	1.14	-	8.1

[a]Since sodium carbonate addition to this circuit was batchwise, these are not steady-state data.

this entrainment was removed on contact with the carbonate solution. The carbonate reservoirs were changed when the carbonate recycle solution pH dropped to ~8. Sodium carbonate consumption was ~0.35 lb per pound of U_3O_8.

Batch tests showed that the semipermanent emulsions formed in the stripping system could be readily broken by adding a small amount (0.05-0.1 g per liter of aqueous) of a surfactant, Victawet 12, suggesting that the emulsion difficulties encountered in run 5 might have been avoided by adding Victawet 12 to the ammonium sulfate recycle solution.

Control of Ammonium Sulfate Concentration and Solution Volume Buildup. The ammonium sulfate solution was not drained from the uranium stripping and precipitation systems between runs. Since ammonium hydroxide was continuously added, it was assumed that some bleed of the recycle solution would be required to prevent buildup of the aqueous volume. However, no bleed was necessary since aqueous losses, primarily by evaporation during uranium precipitation and filtration but also by entrainment in solvent leaving the stripping system and by occlusion in the uranium filter cake, were approximately equivalent to the ammonium hydroxide input volume. Buildup of the ammonium sulfate concentration was limited by the last two losses. The sulfate concentration increased from its original value of 1.2 M to ~1.8 M during runs 1 and 2 and then decreased and stabilized at approximately 1.5 M for the remaining runs.

3.1 Preparation of Uranium Product.

Drying at 110°C of the unwashed filter cakes from the continuous runs gave uranium products analyzing 70-77% U_3O_8, 4-5.5% NH_3, and 13-16% SO_4 (Table 3.6). Repulping the dried cake briefly in 5% NH_4OH was not highly effective in lowering the sulfate or the molybdenum content. Calcination at 600°C eliminated ammonia from the product, and calcination for 3 hr at 700°C or 1 hr at 800-900°C decreased the sulfate content to 0.2% or less. The latter calcines contained ~98% U_3O_8, with the principal contaminant being molybdenum. Molybdenum in the products increased from ~0.35% (based on U_3O_8) for run 4 (lowest pH run) to 0.65% for run 5 (highest pH run). The latter value exceeds the specification limit of 0.6% for uranium concentrates.

3.2 Recovery of Uranium from Carbonate Strip Solutions

Uranium was recovered from the carbonate strip solutions and separated effectively from molybdenum by precipitation with sodium hydroxide. The carbonate strip solutions (individual batches for each run were combined) contained a much higher concentration of uranium than of molybdenum:

Table 3.6 Preparation of Uranium Products

Procedure: Unwashed uranium filter cakes from continuous runs dried at 110°C; portions of dried cake repulped for ~10 min in 5% NH_4OH, filtered, and calcined

Run No.	Filter Cake Wash	Calcination Time, hr	Calcination Temp., °C	Analysis,[a] % U_3O_8	Mo	NH_3	SO_4
2	None	20	110	73.1	0.40	5.1	16.3
	Repulped	20	110	75.2	0.41	4.6	13.1
	Repulped	1	850	97.0	0.48	<0.01	<0.1
3	None	20	110	74.5	0.44	5.6	13.3
	Repulped	20	110	84.7	0.44	3.2	-
	Repulped	1	850	99.0	0.46	<0.01	<0.1
4	None	20	110	77.6	0.30	3.9	12.8
	Repulped	20	110	77.7	0.29	4.0	8.9
	Repulped	1	850	98.2	0.33	<0.01	<0.1
5	None	20	110	70.6	0.65	5.6	16.5
	Repulped	20	110	74.7	0.51	4.2	10.3
	Repulped	1	600	84.1	0.58	<0.01	11.8
	Repulped	2	600	83.7	0.58	<0.01	11.5
	Repulped	3	600	86.5	0.56	<0.01	11.3
	Repulped	1	650	87.6	0.57	<0.01	11.3
	Repulped	2	650	87.7	0.58	<0.01	10.7
	Repulped	3	650	88.5	0.61	<0.01	9.0
	Repulped	1	700	88.2	0.59	<0.01	9.7
	Repulped	2	700	89.7	0.62	<0.01	9.2
	Repulped	3	700	97.8	0.60	<0.01	0.2
	Repulped	1	800	97.6	0.66	<0.01	<0.1
	Repulped	1	850	98.0	0.64	<0.01	<0.1
	Repulped	1	900	98.0	0.62	<0.01	<0.1

[a]Spectrographic analyses showed <0.1% vanadium and <0.1% iron in all products.

Run No.	Analysis, g/liter U	Mo
3	15.2	0.66
4	18.1	1.55
5	9.2	0.96

Uranium was recovered >99.9% from the last two solutions by heating to ~90°C and adding 5 M NaOH to pH 12.1-12.3. Filtration was difficult. The washed and calcined (750°C for 1 hr) products contained <0.06% Mo, amounting to less than 1% of the total molybdenum:

Run No.	Precipitation pH	NaOH Consumption, g per liter of strip solution	Analysis of Calcined Product, %		
			U_3O_8	Mo	Na
4	12.1	42	82	0.055	8.8
5	12.3	54	90	0.026	3.6

The volume of carbonate strip liquor which must be processed is relatively small, being only 0.6-0.8% of the volume of leach liquor processed in runs 4 and 5. Presumably, this uranium product would be blended with the product from the main precipitation circuit although this would have the disadvantage of adding some sodium to the total concentrate. For this reason it might prove advantageous to use ammonium carbonate rather than sodium carbonate for stripping molybdenum. Uranium could be precipitated[8] from this solution and separated from molybdenum simply by boiling the solution, to distill ammonia and carbon dioxide, until the pH dropped to ~8.

4.0 ESTIMATED REAGENT COSTS

Based on data from continuous runs 4 and 5,* total reagent costs (Table 4.1) for the extraction, stripping, and precipitation steps are estimated at ~7¢ per pound of U_3O_8. These costs include ~2¢ for sodium carbonate and caustic for stripping molybdenum and for recovering uranium from the carbonate strip solution. For treating molybdenum-free liquors, where use of the carbonate stripping circuit should not be necessary, reagent costs would be ~5¢ per pound of U_3O_8.

5.0 DISCUSSION

In comparison with other stripping methods,[9] controlled pH stripping has several advantages. Reagent costs are as low as or lower than for other methods except possibly sodium chloride stripping and magnesia stripping. The uranium precipitate is filtered rapidly and does not require washing prior to calcination (although a relatively high calcination temperature is needed to eliminate sulfate). The concentrate is of high assay and contains little or no sodium.

---

*Costs are presented for run 5 even though physical operation of the stripping circuit in this run was not satisfactory. Presumably, comparable chemical results and satisfactory physical operation could be obtained with a more easily stripped tertiary amine, e.g., XE-204, or possibly by adding Victawet 12 to the system when using Alamine 336.

Table 4.1 Estimated Reagent Costs

Assumes treatment of a liquor containing 1.25 g of U_3O_8 per liter

Chemical	Consumption	lb/lb U_3O_8 Run 4	lb/lb U_3O_8 Run 5	Unit Cost, ¢/lb	Cost, ¢/lb of U_3O_8 Run 4	Cost, ¢/lb of U_3O_8 Run 4
NH_3	Uranium stripping and precipitation	0.35	0.37	5.9	2.1	2.2
Na_2CO_3	Molybdenum stripping	0.51	0.35	2.3	1.2	0.8
NaOH	Uranium recovery from carbonate strip solution	0.20	0.30	4.7	0.9	1.4
Alamine 336	Distribution loss to raffinate (<5 ppm)	<0.004	<0.004	125	<0.5	<0.5
Organic phase	Entrainment and spillage	0.05 gal[a]	0.05 gal[a]	45¢/gal[b]	2.3	2.3
				Total	7.0	7.2

[a]Assumes loss of organic by entrainment and spillage is 0.05% of the raffinate volume.

[b]Based on kerosene cost of 14¢ per gallon and tridecanol cost of 23¢ per pound.

This stripping method gives relatively poor separation from molybdenum, however, which appears to be its most important drawback. In treating liquors highly contaminated with molybdenum, it is doubtful that concentrate specifications (0.6% molybdenum based on U_3O_8) could be met without an auxiliary treatment* to obtain additional separation from molybdenum. Even if the specification is met, the presence of appreciable molybdenum in the concentrate detracts from its attractiveness as feed for the direct reduction-hydrofluorination-fluorination process. A second disadvantage of the controlled pH stripping method is that it requires more careful control than, for example, sodium chloride stripping. If the pH in the stripping system is permitted to go too high, uranium precipitation and troublesome emulsions occur, whereas too low a pH results in inefficient stripping. Although the pH must be controlled within a relatively narrow range, it should be noted that, in the continuous runs, this was not a particularly difficult task. Once steady-state conditions were obtained, the pH was held fairly constant with only a minimum of adjustment. Results of the continuous runs suggest that, in using Alamine 336, it would be necessary to operate in the pH range 3.6-3.8, where stripping is relatively inefficient but phase separation is rapid, and allow 10-15% of the uranium to enter the carbonate stripping circuit. It seems likely, however, that some of the limitations in using this amine might be eliminated either by adding Victawet 12 to the ammonium sulfate recycle solution or by changing the method of ammonium hydroxide addition. Adding the ammonium hydroxide to the bottom of the first stage mixer, rather than blending it with the other incoming aqueous streams, would avoid uranium precipitation and might permit successful operation at pH 4. This is supported by the fact that phase separation with Alamine 336 was rapid (<1 min) in batch tests at a pH as high as 4.3. Also, better control probably could be obtained by feeding a portion, e.g., 10-20%, of the ammonium hydroxide to the second stage mixer.

With the weaker-base tertiaries, XE-204 and tri(isooctyl)amine, operation in the pH range 3.6-3.8 should give >95% uranium stripping in three stages and control of the system should be simpler than with Alamine 336.

---

*Adsorption of molybdenum from the ammonium sulfate strip liquor onto activated carbon[7,10] prior to uranium precipitation may be possible.

6.0 REFERENCES

1. A. Bellingham, R. Simard, "Sodium Sulfate Stripping of Tri(iso-octyl)amine Extracts," Canada Department of Mines and Technical Surveys, Topical Report No. TR-140/57 (March 6, 1957).

2. E. A. Brown, A. J. Gilmore, W. A. Gow, V. M. McNamara, R. Simard, "Some Variations of Uranium-Ore Treatment Procedures," Paper 227, Proc. Internatl. Conf. on Peaceful Uses of Atomic Energy, Geneva, 1958, Vol. 3, p. 195.

3. "Chem. Tech. Div., Chem. Development Sect. C, Monthly Progress Report for October, 1959," ORNL CF-59-10-101 (an internal memo).

4. K. B. Brown et al., "Progress Report on Raw Materials for September, 1957," ORNL-2443 (Jan. 7, 1958).

5. K. A. Allen, "The Equilibria between Tri-n-octylamine and Sulfuric Acid," ORNL-1977 (Nov. 3, 1955) and J. Phys. Chem., 60: 239 (1956).

6. K. A. Allen, "The Equilibria between Di-n-decylamine and Sulfuric Acid," ORNL-2084 (July 19, 1956).

7. K. B. Brown et al., "Progress Report on Raw Materials for December, 1957," ORNL-2486 (Apr. 17, 1958).

8. "Chem. Tech. Div., Chem. Development Sect. C, Monthly Progress Report for November, 1959," ORNL CF-59-11-132 (an internal memo).

9. D. J. Crouse, K. B. Brown, "Amine Extraction Processes for Uranium Recovery from Sulfate Liquors," ORNL-1959 (Nov. 18, 1955).

10. K. E. Tame, J. R. Ross, J. B. Rosenbaum, "Acid-CCD-Solvent Extraction Processing of White Canyon and Happy Jack Ores," U. S. Bur. Mines, Salt Lake City, RR-49.1 (March, 1957).

7.0 APPENDIX

7.1 Description of the Amine Reagents

Information on structure, source of supply, and present availability of the amine compounds used in this study is given in Table 7.1. Further information on compound purity, losses to aqueous liquors, diluent compatibility, etc. was reported previously (ORNL-1734, -1922, -1959, -2099, -2366, -2380, -2466).

7.2 Equipment Design

The mixer-settlers used in the continuous runs were of the type described in ORNL-2172, Appendix A. Information on the size of the equipment is shown in Table 7.2.

Table 7.2 Size of Equipment Used in Continuous Runs

Uranium Stripping	
Mixer volume, stage 1	800 ml
stages 2-3	350 ml
Settler volume	800 ml
Settler area	12 in.^{2}
Molybdenum Stripping	
Mixer volume	350 ml
Settler volume	800 ml
Settler area	12 in.^{2}
Carbonate reservoirs, working volume	500 ml
Precipitator (two co-current agitated beakers) total volume	1800 ml

Table 7.1 Description of Amine Reagents

Amine	Structure	Supplier	Avail-ability
Alamine 336	Mixture of straight-chain tertiary amines, 55% octyl—45% decyl	General Mills	a
XE-204 (didodecenyl-n-butylamine)	$\left[CH_3-\overset{CH_3}{\underset{CH_3}{C}}-CH_2-\overset{CH_3}{\underset{CH_3}{C}}-CH_2-CH{=}CH-CH_2-\right]_2-N-CH_2-CH_2-CH_2-CH_3$	Rohm and Haas	b
Tri(iso-octyl)	Branching reported to be no closer to the nitrogen than the third carbon	Carbide	c
Bis(1-nonyldecyl)	$\left[\begin{array}{l}CH_3-CH_2-CH_2-CH_2-CH_2-CH_2-CH_2-CH_2-CH_2-CH-\\ \qquad\qquad\qquad\

ORNL-2941
UC-26 Technology-Raw Materials
TID-4500 (15th ed.)

INTERNAL DISTRIBUTION

1. C. E. Center
2. Biology Library
3. Health Physics Library
4-5. Central Research Library
6. Reactor Experimental Engineering Library
7-26. Laboratory Records Department
27. Laboratory Records, ORNL R.C.
28. A. M. Weinberg
29. L. B. Emlet (K-25)
30. J. P. Murray (Y-12)
31. J. A. Swartout
32. E. H. Taylor
33. E. D. Shipley
34. M. L. Nelson
35-36. F. L. Culler
37. W. H. Jordan
38. J. B. Adams
39. J. H. Frye, Jr.
40. S. C. Lind
41. G. I. Cathers
42. A. Hollaender
43. F. F. Blankenship
44. M. T. Kelley
45. C. F. Coleman
46. R. S. Livingston
47. C. P. Keim
48. D. J. Crouse
49. C. E. Winters
50. A. D. Ryon
51. D. Phillips
52. W. K. Eister
53. F. R. Bruce
54. D. E. Ferguson
55. R. B. Lindauer
56. H. E. Goeller
57. R. A. Charpie
58. M. E. Whatley
59. M. J. Skinner
60. R. E. Blanco
61. G. E. Boyd
62. W. E. Unger
63. R. S. Cockreham
64. A. T. Gresky
65. E. D. Arnold
66. C. E. Guthrie
67. J. W. Ullmann
68. K. B. Brown
69. K. O. Johnsson
70. B. Weaver
71. J. C. Bresee
72. C. A. Blake
73. J. G. Moore
74. K. A. Allen
75. R. P. Wischow
76. W. D. Arnold
77. F. J. Hurst
78. R. S. Lowrie
79. F. G. Seeley
80. J. S. Drury
81. J. C. White
82. J. T. Long
83. R. E. Leuze
84. R. A. McNees
85. J. T. Roberts
86. J. R. Flanary
87. W. Davis
88. R. H. Rainey
89. E. M. Shank
90. J. O. Blomeke
91. C. D. Watson
92. W. H. Lewis
93. E. Lamb
94. W. R. Grimes
95. P. M. Reyling
96. D. L. Datz (consultant)
97. C. E. Larson (consultant)
98. J. H. Rushton (consultant)
99. I. Perlman (consultant)
100. H. Worthington (consultant)
101. ORNL - Y-12 Technical Library, Document Reference Section

EXTERNAL DISTRIBUTION

102. Division of Research and Development, AEC, ORO
103. H. L. Hazen, Farmer's Union Bldg., Denver, Colo.
104. M. E. Wadsworth, University of Utah
105-113. E. C. Van Blarcom, Division of Raw Materials, Washington
114-592. Given distribution as shown in TID-4500 (15th ed.) under Technology-Raw Materials category (75 copies - OTS)