MARTIN MARIETTA ENERGY SYSTEMS LIBRARIES
3 4456 0361511 2

84

CENTRAL RESEARCH LIBRARY
DOCUMENT COLLECTION

ORNL-2967
UC-34 – Physics and Mathematics
TID-4500 (15th ed.)

EQUIPOISE – AN IBM-704 CODE FOR THE SOLUTION OF TWO-GROUP, TWO-DIMENSIONAL, NEUTRON DIFFUSION EQUATIONS IN CYLINDRICAL GEOMETRY

M. L. Tobias
T. B. Fowler

CENTRAL RESEARCH LIBRARY
DOCUMENT COLLECTION
LIBRARY LOAN COPY
DO NOT TRANSFER TO ANOTHER PERSON
If you wish someone else to see this document, send in name with document and the library will arrange a loan.

OAK RIDGE NATIONAL LABORATORY
operated by
UNION CARBIDE CORPORATION
for the
U.S. ATOMIC ENERGY COMMISSION

Printed in USA. Price $2.00. Available from the

Office of Technical Services
Department of Commerce
Washington 25, D.C.

LEGAL NOTICE

This report was prepared as an account of Government sponsored work. Neither the United States, nor the Commission, nor any person acting on behalf of the Commission:

A. Makes any warranty or representation, expressed or implied, with respect to the accuracy, completeness, or usefulness of the information contained in this report, or that the use of any information, apparatus, method, or process disclosed in this report may not infringe privately owned rights; or

B. Assumes any liabilities with respect to the use of, or for damages resulting from the use of any information, apparatus, method, or process disclosed in this report.

As used in the above, "person acting on behalf of the Commission" includes any employee or contractor of the Commission, or employee of such contractor, to the extent that such employee or contractor of the Commission, or employee of such contractor prepares, disseminates, or provides access to, any information pursuant to his employment or contract with the Commission, or his employment with such contractor.

ORNL-2967
ERRATA

EQUIPOISE – AN IBM-704 CODE FOR THE SOLUTION OF TWO-GROUP, TWO-DIMENSIONAL, NEUTRON DIFFUSION EQUATIONS IN CYLINDRICAL GEOMETRY

M. L. Tobias
T. B. Fowler

corrected - July 14, 1961. MB

M. L. Tobias
T. B. Fowler

DATE ISSUED

OCT 17 1960

OAK RIDGE NATIONAL LABORATORY
Oak Ridge, Tennessee
operated by
UNION CARBIDE CORPORATION
for the
U. S. ATOMIC ENERGY COMMISSION

MARTIN MARIETTA ENERGY SYSTEMS LIBRARIES
3 4456 0361511 2

CONTENTS

Abstract 1

Introduction 1

Description of the Computational Method 2

- Basic Difference Equations 2
- A Simple Illustration 3
- The "Extrapolated Liebmann Method" 4
- Convergence Criteria 5

Experience with the Program 6

Acknowledgment 11

Notation 11

Appendix A. Structure of the EQUIPOISE Code 13

Appendix B. Input Preparation, Sample Problem, and Output 14

Appendix C. Machine Operating Instructions 35

Appendix D. Derivation of Various Equations Used in the Program 37

Appendix E. FORTRAN List of the Code 41

References 87

EQUIPOISE – AN IBM-704 CODE FOR THE SOLUTION OF TWO-GROUP, TWO-DIMENSIONAL, NEUTRON DIFFUSION EQUATIONS IN CYLINDRICAL GEOMETRY

M. L. Tobias T. B. Fowler

ABSTRACT

An IBM-704 code for the solution of two-group, two-dimensional neutron diffusion equations in cylindrical geometry has been constructed using FORTRAN. In its present form, the code can treat problems involving a maximum of 625 mesh points (including boundary points). The machine required must be at least 8K with one drum unit and seven tape units. The iterative procedure used is simpler than any currently in use. The "extrapolated Liebmann process" is used to speed convergence. Machine running times and required number of iterations have been comparable with and often less than those required by similar programs. A typical 200-point case converged in $4\frac{1}{2}$ min and required 50 sweeps through the mesh. Running times are roughly proportional to the number of mesh points.

No proofs are presented to guarantee that this program will converge in all cases which meet the input number requirements. However, no difficulties have yet been experienced in realistic problems, and a special example which combined an extremely bad initial flux guess with awkward material location converged in a reasonable time (23 min).

INTRODUCTION

EQUIPOISE, the program described in this report, is a two-group, two-dimensional, neutron diffusion equation code for cylindrical geometry, designed to meet the need for using such a code as a subroutine. While other two-dimensional codes exist (CURE, PDQ), it was impractical to attempt to make them into subroutines primarily because the extremely detailed knowledge of the programs which is required is available conveniently only to the original programmers. In the process of constructing a new two-dimensional code, a somewhat novel and elementary approach was used. Given the five-point-difference equation analogous to the two-group diffusion equations, the eigenvalue (the number by which ν, the number of neutrons per fission, must be multiplied to have a critical condition) is computed by substituting a flux guess into the equations, adding them up and solving for the eigenvalue. By so doing, the eigenvalue will be the ratio of neutron absorptions plus leakages to neutrons produced. For any reasonable flux guess, the eigenvalue is roughly approximated by this procedure, but even very bad initial guesses are rapidly corrected in the succeeding iterative process. (It has been a common experience to find that the critical eigenvalue is computed much sooner than the correct flux distribution.) Using the eigenvalue just computed, all points in the mesh are swept to compute fast and thermal fluxes by the "extrapolated Liebmann method" (overrelaxation). Having a new set of fast and thermal fluxes allows the calculation of a new eigenvalue, and the whole process is repeated until either the fluxes or the maximum and minimum point eigenvalues have converged within some preset limit.

An alternative procedure which has been employed is to set the eigenvalue at unity (or any other nonzero number) and compute the fluxes in the above manner until the ratio of successive flux values is everywhere the same. In a given case, the flux distributions obtained by the two methods are the same only if the fixed eigenvalue is the same as the calculated eigenvalue. In both procedures, it is necessary to normalize the fluxes to prevent them from going out of machine range. In the present program this has been done by setting the thermal flux at an arbitrary internal point equal to 100.

The distribution of materials and the mesh spacing may be completely arbitrary, so long as a right cylindrical region is completely filled. Three types of boundary conditions are possible: zero flux, zero current, and constant flux. At present, these boundary conditions must apply to a whole edge of a mesh. That is, one might specify the top and bottom surfaces of the cylinder to have zero flux and the curved surface to have zero current, but it is not now possible to say that the upper half of the curved surface is at zero flux while the lower half is insulated. If a constant-flux boundary condition is used, the fixed eigenvalue iteration procedure must be used, and no interior normalization point should be specified.

DESCRIPTION OF THE COMPUTATIONAL METHOD

Basic Difference Equations

The simple five-point-difference equations used to describe neutron diffusion have been discussed in other reports (*1*, *2*); a derivation of these may be found in Appendix D. The two-group equations become, at each point:

$$A_1\Phi_F(I,J+1) + A_2\Phi_F(I,J-1) + A_3\Phi_F(I+1,J) + A_4\Phi_F(I-1,J) + \lambda[A_5\Phi_F(I,J) + A_6\Phi_S(I,J)]$$

$$= \left[A_7 + A_8 + \sum_{i=1}^{4} A_i\right] \phi_F(I,J) , \qquad (1)$$

$$A_1'\Phi_S(I,J+1) + A_2'\Phi_S(I,J-1) + A_3'\Phi_S(I+1,J) + A_4'\Phi_S(I-1,J) + A_7\Phi_F(I,J)$$

$$= \left[\sum_{i=1}^{4} A_i' + A_9\right] \Phi_S(I,J) . \qquad (2)$$

(All symbols are defined in the Notation section.)

Given any set of positive fluxes and zero flux or zero current boundary conditions we may compute an estimate of λ by simply adding up all the equations for the internal points and solving for λ. What we have then is, in reality:

$$\lambda = \frac{\text{neutrons leaked plus neutrons absorbed}}{\text{neutrons produced}} ,$$

so that λ may be looked upon as the inverse of a static multiplication constant. This value of λ is inserted into all the equations. For calculation purposes, Eqs. (1) and (2) are rewritten as

follows:

$$\Phi_F^{t+1}(I,J) = \frac{A_1\Phi_F^t(I,J+1) + A_2\Phi_F^{t+1}(I,J-1) + A_3\Phi_F^t(I+1,J) + A_4\Phi_F^{t+1}(I-1,J)}{A_1 + A_2 + A_3 + A_4 + A_7 + A_8} + \frac{\lambda^t[A_5\Phi_F^t(I,J) + A_6\Phi_S^t(I,J)]}{A_1 + A_2 + A_3 + A_4 + A_7 + A_8} , \quad (3)$$

$$\Phi_S^{t+1}(I,J) = \frac{A_1'\Phi_S^t(I,J+1) + A_2'\Phi_S^{t+1}(I,J-1) + A_3'\Phi_S^t(I+1,J) + A_4'\Phi_S^{t+1}(I-1,J)}{A_1' + A_2' + A_3' + A_4' + A_9} + \frac{A_7\Phi_F^{t+1}(I,J)}{A_1' + A_2' + A_3' + A_4' + A_9} . \quad (4)$$

The superscript t denotes the iteration at which the value of the flux was computed. Note that the most recently computed values of fluxes are always used since one proceeds through the mesh from left to right in each row and from top to bottom as each row is completed. Furthermore, only positive fluxes can be calculated if a positive flux guess is used initially. When a complete new set of fluxes has been obtained, a new λ may be calculated and the process repeated until it converges. (The trivial solution of all fluxes equal to zero is avoided by normalizing the fluxes to a particular value at any interval point.)

The calculational method just described is modified in certain important ways to speed convergence, but it is the basis of the EQUIPOISE program. We have no proof that this procedure is always convergent, but the following observations may be made in order to help explain the success which has been obtained with it. First, there is only one value of λ which will yield all positive fluxes, namely, the smallest positive value. It is impossible to generate either a negative λ or a negative flux in the computation, so that if convergence occurs, it can only be on the one positive set of fluxes and the one positive eigenvalue. Second, the flux distributions and the eigenvalue are relatively insensitive to each other so that a poor initial flux guess yields a "respectable" eigenvalue estimate, and an eigenvalue considerably in error does not have a grave effect on the fluxes. Third, the coefficient associated with the flux at a point is necessarily larger than those of the surrounding points, so that the matrix of the coefficients is highly diagonal.

A Simple Illustration

To illustrate just what the above statements mean in actual computations, consider the following example which represents a certain one-dimensional reactor with two mesh points in two groups. The reactor is insulated on one face and the flux is zero at the other. At the first mesh point there is no slowing down, and at the second there are no fissions:

$$[\Phi_F(2) - \Phi_F(1)] - 0.1\,\Phi_F(1) + 500\,\lambda\Phi_S(1) = 0 , \quad (5)$$

$$[\Phi_S(2) - \Phi_S(1)] - \Phi_S(1) = 0 , \quad (6)$$

$$\Phi_F(1) - \Phi_F(2) - 0.1\,\Phi_F(2) = 0 \quad , \tag{7}$$

$$\Phi_S(1) - \Phi_S(2) + 0.01\,\Phi_F(2) - 0.1\,\Phi_S(2) = 0 \quad . \tag{8}$$

For iteration purposes, these equations become:

$$\Phi_F^{t+1}(1) = \frac{500\,\lambda^t \Phi_S(1)^t + \Phi_F(2)^t}{1.1} \quad , \tag{9}$$

$$\Phi_F(2)^{t+1} = \frac{\Phi_F(1)^{t+1}}{1.1} \quad , \tag{10}$$

$$\Phi_S(1)^{t+1} = \frac{\Phi_S^t(2)}{2} \quad , \tag{11}$$

$$\Phi_S(2)^{t+1} = \frac{\Phi_S^{t+1}(1) + 0.01\,\Phi_F(2)^{t+1}}{1.1} \quad , \tag{12}$$

$$\lambda^t = \left[\frac{\Phi_S(1) + 0.1\,\Phi_F(1) + 0.09\,\Phi_F(2) + 0.1\,\Phi_S(2)}{500\,\Phi_S(1)}\right]^t \quad . \tag{13}$$

Table 1 shows the effects of the process upon a fantastic initial guess. The successive iterations are normalized to $\Phi_S(1) = 1$.

Table 1. Results of Iterative Process Applied to a Simple Example

Variable	Initial Guess	Iteration Results			Exact Answer
		1	2	3	
$\Phi_F(1)$	10^{50}	0.182	2.56	7.60	132
$\Phi_F(2)$	0	0.165	2.33	6.9	120
$\Phi_S(1)$	1	1	1	1	1
$\Phi_S(2)$	10^{100}	0.91	0.93	0.95	2
λ	2×10^{96}	0.0022	0.003	0.0048	0.0504

The "Extrapolated Liebmann Method"

The calculation procedure can be accelerated by the use of the "extrapolated Liebmann (overrelaxation) process" (3):

$$\Phi_{EL}^t = (1 - \beta)\,\Phi_{EL}^{t-1} + \beta(\Phi_{LN}^t) \quad , \tag{14}$$

where β is a number between 1 and 2 and Φ_{LN}^t represents the values calculated by the *ordinary Liebmann process*, the iterative procedure just described. Table 2 shows the result of using $\beta = 1.1$ upon the above equations.

Table 2. Result of Use of Extrapolated Liebmann Process in the Simple Example

Variable	Initial Guess	Iteration Results				Exact Answer
		1	2	3	6	
$\Phi_F(1)$	10^{50}	0.182	3.64	14.6	109	132
$\Phi_F(2)$	0	0.182	3.59	13.6	99	120
$\Phi_S(1)$	1	1	1	1	1	1
$\Phi_S(2)$	10^{100}	0.82	0.80	0.90	1.78	2
λ	2×10^{96}	0.002	0.0035	0.0075	0.042	0.0504

The problem of finding an optimum value for β is solved in the PDQ code (*1*) by determining the largest eigenvalue of a certain matrix. In the present code, an empirical formula (originally regarded as a temporary measure) has proved extremely successful:

$$\beta = 2 - \sqrt{2}\left[\left(\frac{\pi}{m}\right)^2 + \left(\frac{2.405}{n}\right)^2\right]^{1/2} , \tag{15}$$

where m is the number of intervals in the axial direction and n is the number of intervals in the radial direction. The number of axial intervals is doubled in the formula if one of the axial boundaries is a symmetry boundary. If the value of β selected is underestimated, the process will converge in a sluggish fashion. If it is too large, the values will oscillate too much or even produce negative fluxes. Negative fluxes are not permitted to occur in the code. If $\beta = 1$ they cannot occur, for if the initial guess consists of positive fluxes, all succeeding estimates of the fluxes and the eigenvalue will be positive. If a negative flux should be calculated for a $\beta > 1$, it is destroyed and a new value is generated based upon a new β halfway between 1 and the original estimate. If necessary, the process is repeated until the flux at the point is positive. This lower value of β is used for all succeeding points in that group. Some iterations later, the original higher value of β is restored in the hope that it will not again cause negative fluxes. If it does not, it is retained. More specifically, the calculations are grouped in sets of ten sweeps through the fast and thermal group, and at the start of each of these sets, β is set at its original value.

Convergence Criteria

A problem is not considered converged until both of the following convergence criteria are satisfied:

$$\left|\frac{\lambda_{max} - \lambda_{min}}{\bar{\lambda}}\right| < \epsilon \tag{16}$$

and

$$\left|1 - \frac{\Phi^t_{UN}}{\Phi^{t-1}_N}\right|_{max} < \epsilon \quad . \tag{17}$$

Satisfaction of inequality (16) ensures that there is a satisfactory neutron balance everywhere in fuel-containing regions; (17) requires that all fluxes be converged. Frequently (16) is satisfied before (17) and in such a case a more rapid iterative procedure is employed. The basic iterative process involves a sweep through the fast group followed by a sweep through the slow group and a recalculation of λ. When λ is changing less than 1% from one iteration to the next, it is recalculated only at every tenth iteration. In the 8K machine used in the present program, each sweep through a group requires the use of magnetic-drum storage. Once inequality (16) is satisfied, it is possible to achieve a considerable saving of time in satisfying inequality (17) by repeating the sweep through a given group five times before moving to the other group. During the sweep through one group the fluxes of the other group are held constant. After a total of 15 sweeps through each group (i.e., five through group 1, five through group 2, five through group 1, etc.) the eigenvalue is recalculated. The problem is usually completed at this point.

EXPERIENCE WITH THE PROGRAM

The present code has been compared with PDQ-2 and CURE for speed and accuracy on two-group problems. EQUIPOISE has several features in common with both codes: the Laplacian operator is the same as CURE's, while the placement of symmetry boundaries is that of PDQ. It is unquestionably much simpler in principle and in internal details than either. What is quite surprising is that, more often than not, a given degree of convergence is reached in fewer mesh sweeps than required by PDQ-2. (This might invariably be the case if the value of β were selected by the accurate method employed in PDQ rather than by an empirical estimate.) Total machine time is also frequently less, despite the fact that PDQ requires less use of magnetic drum storage per iteration. A typical comparison of PDQ-2 and EQUIPOISE is shown in Fig. 1. (The reactor is that of the sample problem in Appendix B.) It is not known whether such a favorable comparison would hold if the method were applied to three or four groups; time did not permit extending the method to more groups or other geometries, although the latter modification would be a relatively minor matter. No attempt was made to allow for meshes larger than 25×25, as the need for treating larger problems did not match the difficulty of accommodating an 8K machine program to such tasks.

No comparison with CURE on speed was possible since the convergence criterion in CURE is entirely different from that used in EQUIPOISE. Flux distributions and multiplication constants were in agreement, however.

Problems which take long to converge on PDQ-2 are equally hard to solve with EQUIPOISE. Figure 2 shows a comparison of the convergence rates obtained on a "hard" case in which point values of the eigenvalue were oversensitive to small flux variations so that the eigenvalue converged more slowly than the flux distribution. It is seen that the convergence of EQUIPOISE toward the answer is more regular than observed on PDQ-2. (The number of mesh sweeps for PDQ-2 was calculated as half the sum of the fast and slow group sweeps.) A considerable

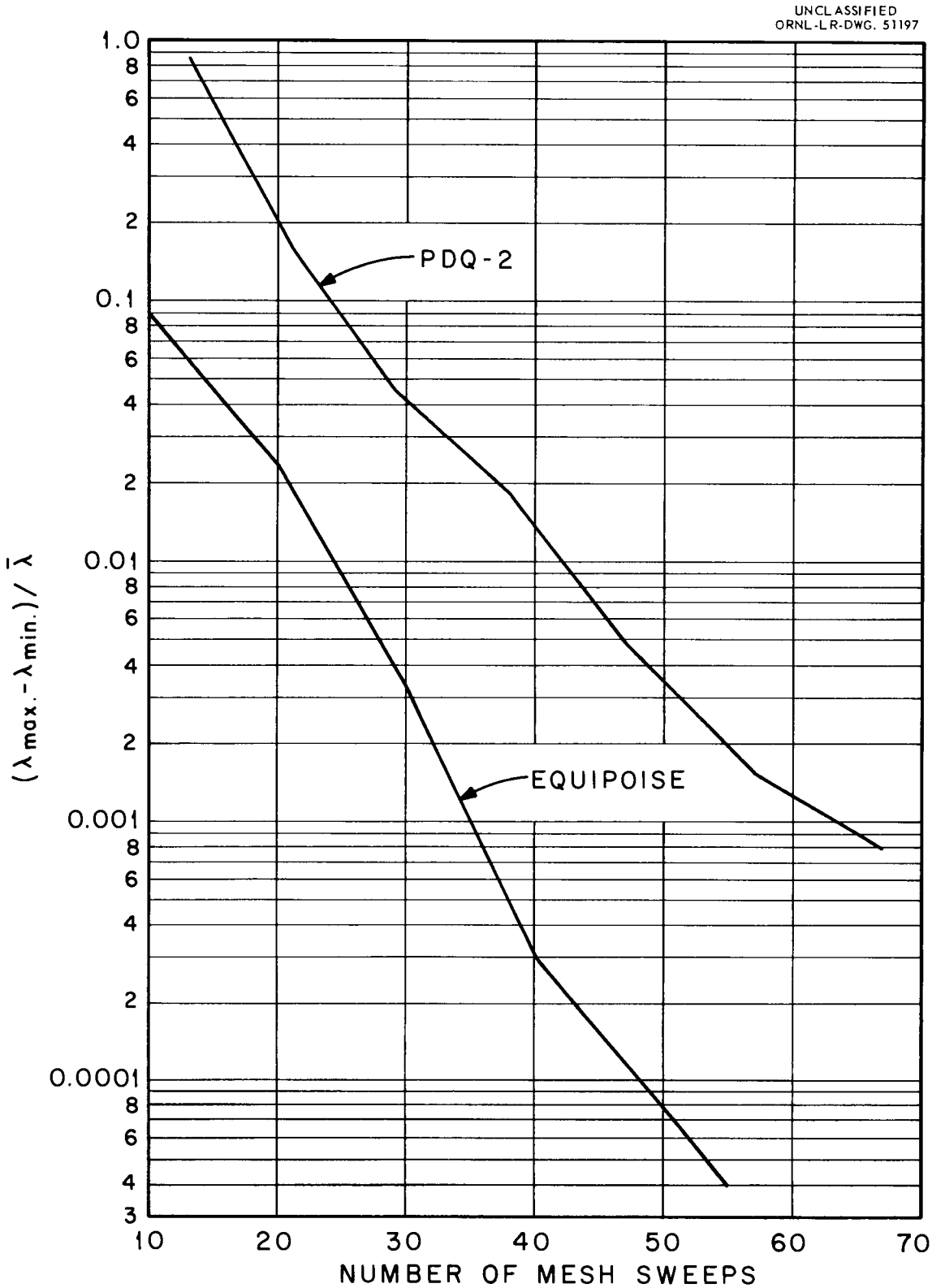

Fig. 1. Comparison of Rate of Convergence of EQUIPOISE with PDQ-2 on a 225-Point Case Which Converged Rapidly.

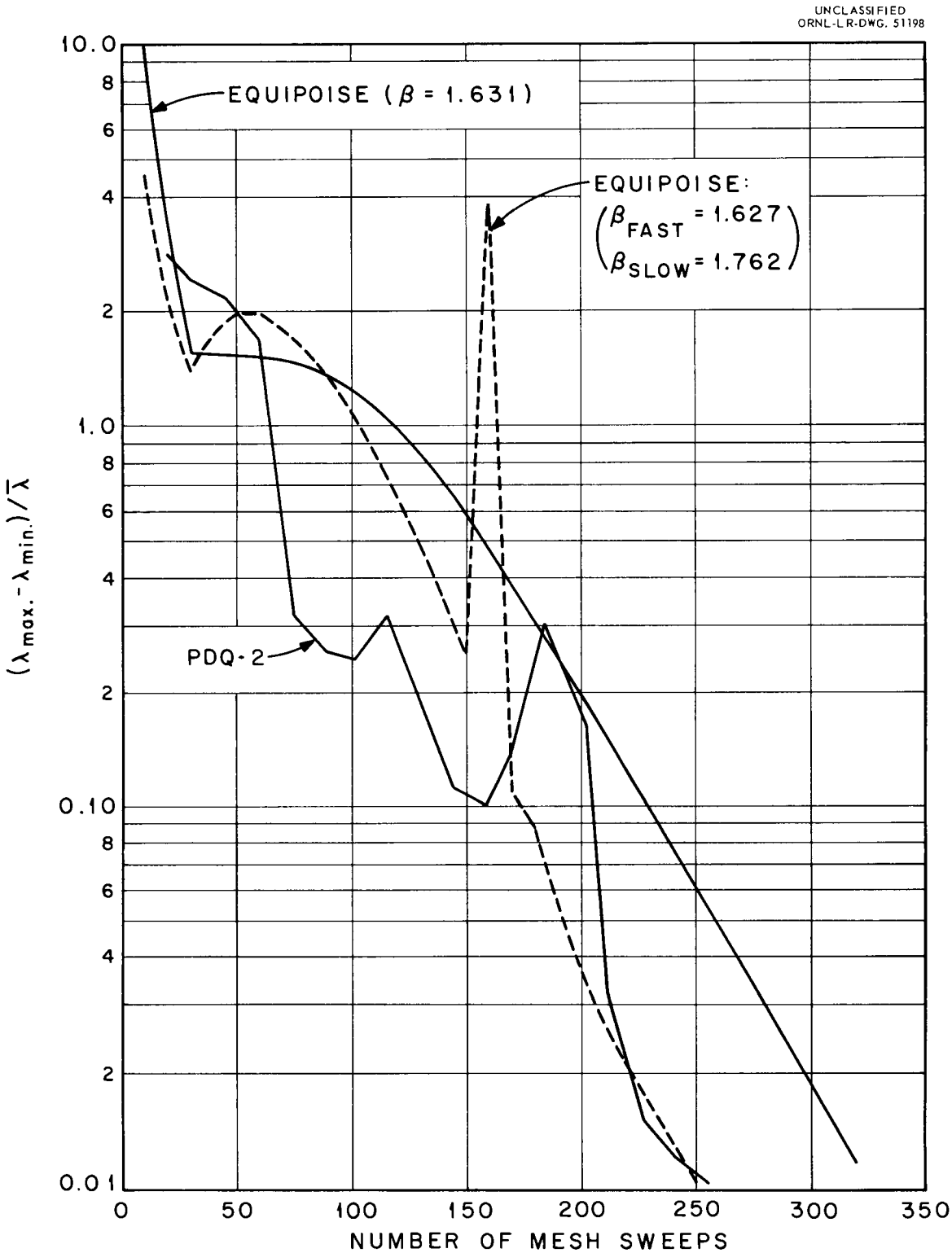

Fig. 2. Comparison of Rate of Convergence of EQUIPOISE with PDQ-2 on a 255-Point Case Which Converged Slowly.

improvement in the convergence rate of EQUIPOISE was obtained in this case when the values for β computed by PDQ-2 were used instead of the empirical value. The dashed curve of Fig. 2 shows the effect of using improved β values. The sharp peak noted at 160 iterations is known to be the result of a machine error, recovery from which appears to be quite rapid. (Note: the two values of β were inserted using binary patches for this case only. Normally only one value can be used.)

A special case was devised to test the code under the extreme conditions of poor geometry and a bad initial flux guess. Figure 3 shows the design of the reactor. The only connection

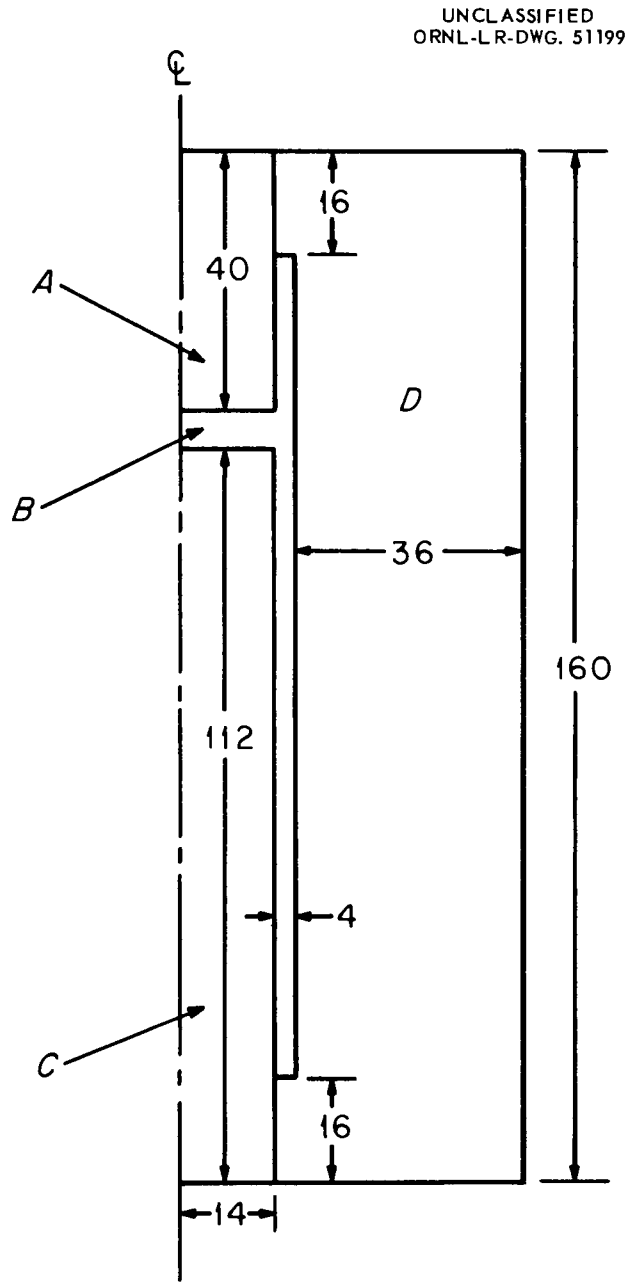

Fig. 3. Diagram for Special Test Case. All dimensions in centimeters. (*A*) Lightly loaded fuel region, (*B*) wall impervious to neutrons, (*C*) heavily loaded fuel region, (*D*) moderator.

between fuel regions A and C is a roundabout path through moderating region D. The fast and slow fluxes were zero at the outside surface of the cylinder. A 280-point mesh was used with an 8-cm vertical increment and a 4-cm radial increment. The fast and slow fluxes were assumed zero everywhere initially except in the lightly loaded region A where a thermal flux of 100 was used as an initial guess. The problem converged in about 230 iterations (deviation of point eigenvalues from the average eigenvalue $<0.1\%$) with fluxes of the order of 10^8 appearing in region C, which had ten times the fuel concentration of region A. The initial eigenvalue estimate was about 12, and the final value was about 0.57.

Various devices were used in the hope of accelerating convergence, but without noticeable improvement. The Aitken δ^2 process (*4*) was the principal one of these and was employed using the values obtained in the last three iterations of each group of 10 mesh sweeps. Application of the δ^2 process was made only at those points where the extrapolated value of the flux was either greater than $\frac{1}{2}$ the last flux obtained or less than twice that value. Further, the absolute value of the difference in the last two of the three fluxes used was required to be less than that between the first two. Despite these restrictions, the use of the δ^2 process seemed to retard convergence. The values at some points would be improved, while at others the extrapolated fluxes would be worse. Changes in the application of the Aitken δ^2 process, such as using a wider spread between the fluxes used or extrapolating only when all points satisfied the restrictions simultaneously were likewise of no value. Without a doubt, the extrapolated Liebmann method, unadorned by complicating devices, has been the most reliable and rapidly convergent of the methods tried in this program.

An occasional case may be observed in which it is found impossible to attain the desired degree of convergence. Initially, the problem may be converging quite rapidly, when suddenly the deviations in lambda and the fluxes, as calculated by formulas (16) and (17), stop decreasing and oscillate over a narrow range indefinitely. Examination of those few cases in which this behavior appeared indicated that some improvement could be obtained by reducing the over-relaxation coefficient to unity. The source of this phenomenon appears to lie in the loss of significant figures as convergence is approached. To avoid excessive running time, it is advisable to use no more than 300 iterations on any problem. It is also helpful to plot the on-line convergence edits on semilogarithmic paper while the problem is running. Any significant changes in convergence rate are almost immediately apparent on the graph.

A further caution which should be noted is that the code should not be used for one-dimensional problems, that is, those which involve uniform regions with two opposing boundaries insulated. Such problems converge very slowly in the present form of the code.

In this program, as in any other finite-difference calculation, care should be exercised in the assignment of mesh spacings, although no specific advice can be given on this matter. It is of interest to note that in a case in which the fluxes are supposed to be symmetrical about the midplane, the results will not be symmetrical if the mesh spacing is distorted. On the other hand, if the mesh spacing for such a case is symmetric, the fluxes at corresponding points will agree almost exactly. The entire matter of proper mesh spacing is still under study, with particular reference to adjoining regions of widely different properties.

ACKNOWLEDGMENT

The authors wish to express their thanks to C. W. Nestor, Jr., for his invaluable advice, encouragement, and helpful suggestions, to D. R. Vondy who performed most of the hand computations, and to Marjorie P. Lietzke, who assisted in the preparation of the program.

NOTATION

A_1 $$\left(R_J + \frac{\Delta R_R}{2}\right)\frac{1}{\Delta R_R}\left(D_{F1}\Delta Z_T + D_{F2}\Delta Z_B\right)$$

A_2 $$\left(R_J - \frac{\Delta R_L}{2}\right)\frac{1}{\Delta R_L}\left(D_{F3}\Delta Z_B + D_{F4}\Delta Z_T\right)$$

A_3 $$\frac{1}{\Delta Z_B}\left[D_{F2}\left(R_J + \frac{\Delta R_R}{4}\right)\Delta R_R + D_{F3}\left(R_J - \frac{\Delta R_L}{4}\right)\Delta R_L\right]$$

A_4 $$\frac{1}{\Delta Z_T}\left[D_{F1}\left(R_J + \frac{\Delta R_R}{4}\right)\Delta R_R + D_{F4}\left(R_J - \frac{\Delta R_L}{4}\right)\Delta R_L\right]$$

A_5 $$2\nu\Sigma^1_{fF}\left(\frac{\Delta Z_T}{2}\right)\left(\frac{\Delta R_R}{2}\right)\left(R_J + \frac{\Delta R_R}{4}\right) + 2\nu\Sigma^2_{fF}\left(\frac{\Delta Z_B}{2}\right)\left(\frac{\Delta R_R}{2}\right)\left(R_J + \frac{\Delta R_R}{4}\right) + 2\nu\Sigma^3_{fF}\left(\frac{\Delta Z_B}{2}\right)\left(\frac{\Delta R_L}{2}\right)\left(R_J - \frac{\Delta R_L}{4}\right) + 2\nu\Sigma^4_{fF}\left(\frac{\Delta Z_T}{2}\right)\left(\frac{\Delta R_L}{2}\right)\left(R_J - \frac{\Delta R_L}{4}\right)$$

A_6 Same as A_5 but with $\nu\Sigma^k_{fS}$ (k = 1, 2, 3, or 4) substituted for $\nu\Sigma^k_{fF}$

A_7 Same as A_5 but with $(p\Sigma_F)^k$ substituted for $\nu\Sigma^k_{fF}$

A_8 Same as A_5 but with $[(1-p)\,\Sigma_F]^k$ substituted for $\nu\Sigma^k_{fF}$

A_1', A_2', A_3', A_4' The corresponding thermal group forms of A_1, A_2, A_3, and A_4 with slow group diffusion constants used instead of fast

A_9 Same as A_5 but with Σ^k_S substituted for $\nu\Sigma^k_{fF}$

D_{Fk}, D_{Sk} Fast and thermal diffusion coefficients, cm, for the kth quadrant surrounding a mesh point (see Fig. D.1, Appendix D)

I, J Denote the Ith row and the Jth column of the mesh

m, n The number of axial and radial divisions in the mesh

p	The fraction of neutrons removed from the fast group which are absorbed (resonance escape probability)
R, ΔR	Distance radially from axis of symmetry and radial mesh increment, respectively, cm
t	Number of an iteration (sweep through the fast and thermal group equations)
$V^k_{I,J}$	Volume of a quadrant around point I,J (see Appendix D)
W	Total power generated by a reactor, Mw
ΔZ	Axial mesh increment, cm
EL	Subscript denoting a flux calculated using extrapolated Liebmann method (overrelaxation)
LN	Subscript denoting a flux calculated using ordinary Liebmann method
L, R, T, B	Subscript denoting left, right, top, and bottom, respectively
β	Extrapolated Liebmann coefficient (called BETAF and BETAS in EQUIPOISE output)
ϵ	Convergence criterion (called EPI in EQUIPOISE output)
Φ_{UN}, Φ_N	Unnormalized and normalized values of flux; normalized fluxes in the code are fluxes relative to a thermal flux of 100 at an arbitrary point in the reactor; the location of the normalization point is an input item
Φ_F, Φ_S	Fast group and thermal group neutron fluxes
λ, λ_{max}, λ_{min}, $\bar{\lambda}$	λ is the value by which all the $\nu\Sigma_f$'s must be multiplied so that the difference equations balance; at any iteration, there will be a mesh point at which the value of λ required for a balance is largest, and one where the value is smallest; these λ's are λ_{max} and λ_{min}, respectively; $\bar{\lambda}$ is the value obtained by adding up all the equations and solving by λ; $\bar{\lambda}$ is called NUCRITICAL in the output, because if Σ_f is used as input instead of $\nu\Sigma_f$, $\bar{\lambda}$ would be the value of ν required to make the reactor critical
μ	The number of fission neutrons produced per megawatt second
ρ	The ratio of the unnormalized flux at iteration t to the normalized flux at iteration $t - 1$ at a mesh point
ν	The number of neutrons produced per fission
Σ^k_F	The macroscopic cross section for removing neutrons from the fast group by absorption or slowing down, cm^{-1}; k refers to the quadrant around point I,J (see Appendix D)
Σ^k_{fF}, Σ^k_{fS}	Macroscopic fission cross sections in the kth quadrant around point (I,J) for fast and slow groups, respectively, cm^{-1}
Σ_S	Thermal-group macroscopic absorption cross section, cm^{-1}

Appendix A

STRUCTURE OF THE EQUIPOISE CODE

General. – EQUIPOISE was programmed in FORTRAN-II language in subroutine form utilizing PF PROG and PROG (5), two routines which permit FORTRAN-II type subroutines to be called from tape as needed. The standard FORTRAN BSS loader is replaced by PF PROG, and PROG is included as a subroutine in the main code or calling program. At execution time, a subroutine is called into the fast memory by the calling program by two call statements:

CALL PROG(I) , CALL NAME ,

where I is the serial number of the subroutine NAME that is stored on the master program tape. This permits alterations to the code to be made easily by adding or removing subroutines and altering the calling program.

For an 8K machine, EQUIPOISE requires approximately 5800 number storage cells in the fast memory, out of the 7000 available (PF PROG requires 1000 cells), hence approximately 1200 fast memory cells are available for the main code plus any one subroutine.

Subroutines. – The complete program consists of the main code and 18 main subroutines. These are listed below in the order in which they are loaded on the master program tape. The serial number of each subroutine is one less than the number given, since the main code is not considered a subprogram.

1.	Main code	Calling program
2.	Subroutine FLUX	Does the flux iteration calculation
3.	Subroutine EXTR	Does the convergence calculation
4.	Subroutine MONTOR	Prints on line iteration number, convergence, and eigenvalue estimates as the calculation progresses
5.	Subroutine CONST1	The five group constants calculation subroutines
6.	Subroutine CONST2	
7.	Subroutine CONST3	
8.	Subroutine CONST4	
9.	Subroutine CONST5	
10.	Subroutine OUT2	Calculates total absorptions, productions, and leakages, and flux ratio
11.	Subroutine OUT22	Calculates final eigenvalue, and region absorptions and productions
12.	Subroutine OUT3	Writes flux distribution on output tape 9
13.	Subroutine OUT33	Writes total absorptions, production, and leakages; region absorption and production on output tape 9
14.	Subroutine INPUT	Reads input from cards
15.	Subroutine OUT1	Writes output tape 9 and prints initial conditions
16.	Subroutine BETTA	Calculates extrapolated Liebmann coefficients
17.	Subroutine SOUR	Calculates source
18.	Subroutine OUT4	Writes source on output tape 9
19.	Subroutine RESTRT	Restarts calculation in case of machine error

Two SAP type subroutines were programmed in order to do logical sums of the group constants that are stored on drums in order to check for drum errors. They are designated SUBINN which sums the constants before they are written on drums, and SUBOUT which sums the constants after they are read from drums. SUBINN appears in subroutines CONST3 and CONST5. SUBOUT appears in subroutines FLUX, EXTR, and OUT2.

Appendix B

INPUT PREPARATION, SAMPLE PROBLEM, AND OUTPUT

Number Formats. – The input for EQUIPOISE requires both integers and decimal numbers. Integers are written without a decimal point and occupy the extreme right-hand columns of the field. The left-hand column of the field is reserved for the sign; however, it may be left blank if the sign is positive, and zeros may be represented by blanks. For example, the permissible formats for the integer 4 in a field of three are | + | 0 | 4 |, | + | | 4 |, | | | 4 |.

Decimal numbers may be written with or without a decimal point. If the decimal point is not written it is assumed to be between the first two columns of the field, and the last two columns of the field contain the sign of the power of ten and the power of ten. The sign of the number occupies the first column; however, it may be left blank if positive. If the decimal point is written, the power of ten may or may not be written. If the power of ten is not needed, the last two columns may contain data. Also if the number is positive the first column may contain data. Zeros may be represented by blanks. For example, permissible formats for the number 0.00333 in a field of seven are

| + | 3 | 3 | 3 | 0 | – | 2 |, | | 3 | 3 | 3 | | – | 2 |,

| | 3 | . | 3 | 3 | – | 3 |, | 0 | . | 0 | 0 | 3 | 3 | 3 |.

The number 432 in a field of six could be written

| | 4 | 3 | 2 | + | 3 |, | | 4 | 3 | 2 | . | 0 |,

| 4 | 3 | . | 2 | + | 1 |, | 4 | 3 | 2 | . | | |.

If a number, integer, or decimal is zero, the entire field may be left blank.

Input Data Cards. – Figure B.2 shows an input data form. There are four types of data cards required for input to EQUIPOISE: (1) title card, (2) control card, (3) mesh-specification cards, (4) region-specification cards.

Title Card. – The first column of the title card is left blank. Columns 2 through 72 may contain any desired information and is printed at the top of each page of output.

Control Card. – The first eleven numbers on the control card are integers, and the last eight numbers are decimal numbers.

Columns 1–3, IMAX $\leqq$ 25: Total number of rows. The rows in the mesh are numbered from top to bottom beginning with 1.

Columns 4–6, JMAX $\leq$ 25: Total number of columns. The columns in the mesh are numbered from left to right beginning with 1. A symmetry boundary is assumed to exist midway between columns 1 and 2.

Columns 7–9, NORI: Row coordinate of the normalization point. All fast and slow fluxes are divided by the slow flux at the normalization point and multiplied by 100. If a constant flux not equal to zero is specified along a boundary (see below), the slow-flux value along this boundary must be specified as 100, and the normalization point must be on this boundary.

Columns 10–12, NORJ: Column coordinate of the normalization point.

Columns 13–14, F.I.: Previous-flux indicator. If this number is +1, the flux distribution from the preceding case is used as the initial flux for the present case regardless of the initial flux values on the region specification cards (see below). Restrictions are that the present case must have the same number of rows and columns and the same boundary conditions as the preceding case. If this number is 0, the initial flux is taken from the region-specification cards.

Columns 15–16, S.I.: Source indicator. If this number is +1, the source,

$$\nu\Sigma_{fF}\Phi_F + \nu\Sigma_{fS}\Phi_{Sk} \ ,$$

is computed for output at each mesh point, where k = 1, 2, 3, 4. If S.I. is 0, the source calculation is skipped.

Columns 17–18, C.I.: Convergence indicator. If this number is +1, the problem converges on NUCRITICAL (λ) only; if 0, the problem converges on both NUCRITICAL and the flux.

Columns 19–20, L.I.: NUCRITICAL indicator. If this number is +1, NUCRITICAL is held constant at 1.0 and the problem is solved for the flux only. If this number is 0, NUCRITICAL is not held constant.

Columns 21–22, T.I.: Top-boundary indicator. The top, right, and bottom boundaries may be either constant-flux boundaries or symmetry boundaries. If this number is +1, a symmetry boundary is assumed to exist midway between rows one and two. If T.I. is 0, row one is assumed to be a constant-flux boundary.

Columns 23–24, R.I.: Right-boundary indicator. If this number is +1, a symmetry boundary is assumed to exist midway between columns JMAX-1 and JMAX; if 0, column JMAX is assumed to be a constant-flux boundary.

Columns 25–26, B.I.: Bottom-boundary indicator. If this number is +1, a symmetry boundary is assumed to exist midway between rows IMAX-1 and IMAX; if 0, row IMAX is assumed to be a constant-flux boundary.

Columns 27–32, Φ_F^T: Value of constant fast flux along row one. If T.I. (columns 21–22) is +1, this number may be ignored.

Columns 33–38, Φ_S^T: Value of constant slow flux along row one. If T.I. is +1, ignore this number.

Columns 39–44, Φ_F^R: Value of constant fast flux along column JMAX. If R.I. is +1, ignore this number.

Columns 45–50, Φ_S^R: Value of constant slow flux along column JMAX. If R.I. is +1, ignore this number.

Columns 51–56, Φ_F^B: Value of constant fast flux along row IMAX. If B.I. is +1, ignore this number.

Columns 57–62, Φ_S^B: Value of constant slow flux along row IMAX. If B.I. is +1, ignore this number.

Columns 63–68, ϵ: Convergence criterion. If C.I. is +1, the calculation stops when

$$\frac{\lambda_{max} - \lambda_{min}}{\bar{\lambda}} < \epsilon \quad .$$

If C.I. is 0, the calculation stops when the above condition is met as well as the flux convergence:

$$|\rho - 1|_{max} < \epsilon \quad ,$$

where $\rho = \Phi_{UN}^t / \Phi_N^{t-1}$. If L.I. (columns 19–20) is +1, the calculation stops when

$$\frac{\rho_{max} - \rho_{min}}{\frac{1}{2}(\rho_{max} + \rho_{min})} < \epsilon \quad .$$

Columns 69–72, β: Extrapolated Liebmann coefficient. If this number is 0, β is computed by the code as described previously. If this number is not 0, the code uses the value of β specified.

Mesh Specification Cards. – Described below are the two types of cards required to specify the mesh: (1) cards giving the ΔZ's and row numbers, and (2) cards giving the ΔR's and column numbers, in that order. The ΔZ's and ΔR's are decimal numbers, and the row numbers and column numbers are integers.

1. In columns 1–6 and 7–9, 10–15 and 16–18, etc., supply a value of ΔZ and the row number up to which this ΔZ applies, going from top to bottom of the mesh. Use as many cards as are needed, with each card, except possibly the last, being completely filled through column 72. The last number on these cards is equal to IMAX.

2. In columns 1–6 and 7–9, 10–15 and 16–18, etc., supply a value of ΔR and the column number up to which this ΔR applies, going from left to right of the mesh. Use as many cards as are needed. The last number on these cards is equal to JMAX.

Region-Specification Cards. – The regions are specified as rectangles with each card completely specifying one region, for as many regions as are needed to cover the mesh. The region-specification cards may be in any order. The first four numbers of each card are integers, and the last nine numbers of each card are decimal numbers.

Columns 1–3, ROW1	Upper-row number of the region
Columns 4–6, ROW2	Bottom-row number of the region
Columns 7–9, COL1	Left-column number of the region
Columns 10–12, COL2	Right-column number of the region
Columns 13–19, D_F	Diffusion coefficient of fast group

Columns 20–26, D_S	Diffusion coefficient of slow group
Columns 27–33, Σ_F	Macroscopic removal cross section of fast group
Columns 34–40, Σ_S	Macroscopic absorption cross section of slow group
Columns 41–47, $\nu\Sigma_{fF}$	Nu times macroscopic fission cross section of fast group
Columns 48–54, $\nu\Sigma_{fS}$	Nu times macroscopic fission cross section of slow group
Columns 55–60, p	Resonance escape probability
Columns 61–66, Φ_F	Initial flux guess for fast group; may be zero
Columns 67–72, Φ_S	Initial flux guess for slow group; may be zero, except for region in which the normalization point appears

Deck Makeup. – EQUIPOISE will run as many cases as desired, with no stops between cases, simply by stacking the input data decks; however, a blank card must follow the last data card of each case. Four blank cards should follow the last input deck.

Sample Problem. – Figure B.1 shows the diagram of the reactor. In addition to the usual axis of symmetry between columns 1 and 2, there is a symmetry boundary condition between rows 14 and 15. Along row 1 and column 15 the fluxes are zero. The reactor is broken up into 7 regions. The properties of the regions are cited in Table B.1.

The initial flux guess was zero for the fast flux, 100 for the thermal flux in regions 1, 2, and 4, 50 in regions 3 and 7, 75 in region 5, and 150 in region 6. Figure B.2 is a standard EQUIPOISE

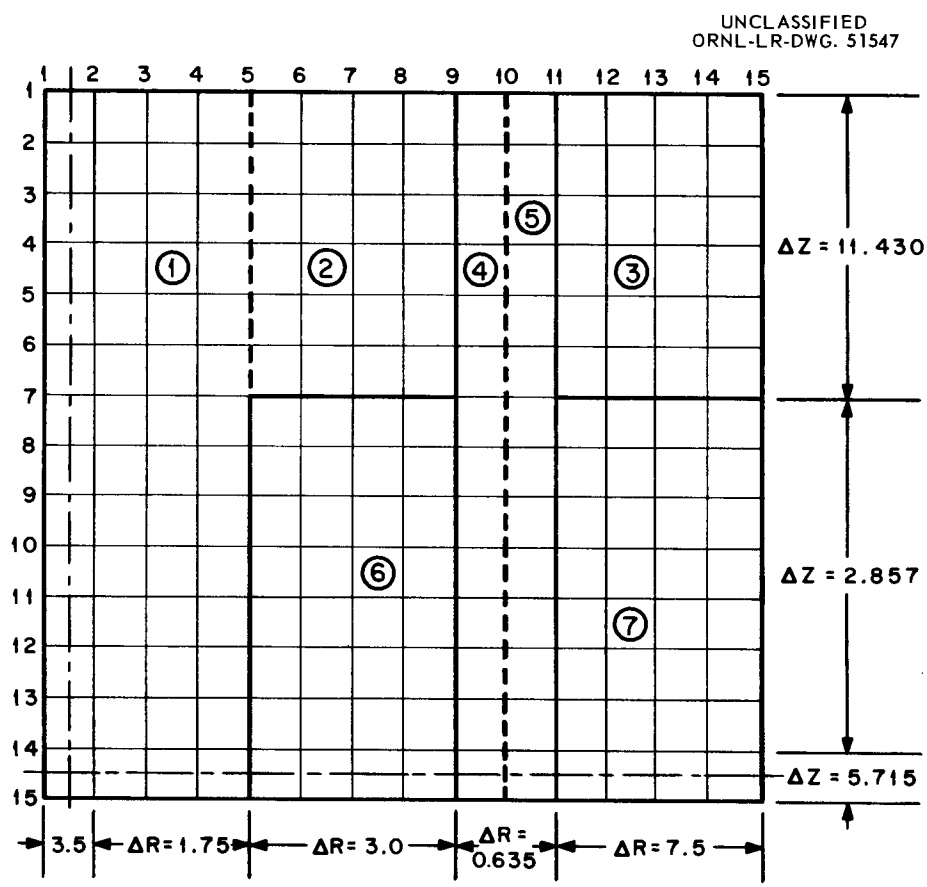

Fig. B.1. Diagram of Reactor in Sample Problem. All distances in centimeters.

Page 17, Fig. B.1. All values shown for ΔR and ΔZ are between *individual* rows or columns. For example, where ΔZ is shown as 11.430, this should be understood as 11.430 cm between rows 1 and 2, rows 2 and 3, etc., up to row 7. The spacing then changes so that the distance between row 7 and row 8 is 2.857 cm.

Table B.1. Properties of Materials in Sample Reactor Problem

Region	D_F	D_S	Σ_F	Σ_S	$\nu\Sigma_{fF}$	$\nu\Sigma_{fS}$	p
1, 2, 3	1.408	0.1703	0.04515	0.01755	0	0	0.988
4, 5	0.6591	0.4576	0.009634	0.001818	0	0	0.9909
6	1.523	0.3251	0.0271	0.1487	0.00832	0.2709	0.8018
7	0.6591	0.4576	0.009634	0.003818	0	0	0.9909

input form filled out according to the description given in the previous paragraphs. Figures B.3 and B.4 are the on-line and off-line outputs, respectively.

Output. – The on-line output consists of the items shown below.

1. Case number.
2. Number of rows.
3. Number of columns.
4. Number of regions.
5. Boundary conditions for top (T), right (R), and bottom (B) boundaries, respectively (zero for zero flux, 1 for zero current).
6. The coordinates of the normalization point.
7. The convergence criterion (EPI).
8. The mesh specification (increment sizes), DELZ referring to the axial mesh spacing and DELR to the radial mesh spacing.
9. The region specifications, giving the upper, lower, left, and right edges in succession of each region, together with the input nuclear properties and the initial flux guess.
10. The values of the extrapolated Liebmann coefficient β used in the calculation, BETAF being the value used in the fast group and BETAS the value for the thermal group. (In the present code, these are identical.)
11. Convergence levels at every tenth iteration and the eigenvalue estimate at that point. These are expressed in the following forms:

$$\text{CONVR(NUCRIT)} = \frac{\lambda_{max} - \lambda_{min}}{\bar{\lambda}} ,$$

$$\text{CONVR(FLUX)} = \left| \frac{\Phi_{UN}^{t}}{\Phi_{N}^{t-1}} - 1 \right|_{max} ,$$

where the superscript t refers to the iteration number.

NUCRITICAL, the estimate at this point of the value by which the input value of ν, the number of neutrons produced per fission, must be multiplied to make the reactor critical.

KEY PUNCHING INSTRUCTIONS:
Punch only those cards which have data in columns 73 - 80.

EQUIPOISE INPUT FORM

REQUEST NO. 1803A0

1	TITLE	73 80
	REAL TEST CASE (CURE)	1

IMAX 1	JMAX 4	NORI 7	NORJ 10	F.I. 13	S.I. 15	C.I. 17	L.I. 19	T.I. 21	R.I. 23	B.I. 25	T φ_F 27	T φ_S 33	R φ_F 39	R φ_S 45	B φ_F 51	B φ_S 57	ϵ 63	β 69	73 80
15	15	14	2	1													0.001		2

Δz 1	ROW 7	Δz 10	ROW 16	Δz 19	ROW 25	Δz 28	ROW 34	Δz 37	ROW 43	Δz 46	ROW 52	Δz 55	ROW 61	Δz 64	ROW 70	73 80
11.43	7	2.857	14	5.715	15											3

ΔR 1	COL 7	ΔR 10	COL 16	ΔR 19	COL 25	ΔR 28	COL 34	ΔR 37	COL 43	ΔR 46	COL 52	ΔR 55	COL 61	ΔR 64	COL 70	73 80
3.5	2	1.75	5	3.0	9	0.635	11	7.5	15							4

ROW 1 1	ROW 2 4	COL 1 7	COL 2 10	D_F 13	D_S 20	Σ_F 27	Σ_S 34	$\nu\Sigma f_F$ 41	$\nu\Sigma f_S$ 48	P 55	φ_F 61	φ_S 67	73 80
1	15	1	5	1.408	0.17030	0.04515	.01755			.988		100.0	5
1	7	5	9	1.408	0.17030	0.04515	.01755			.988		100.0	6
1	7	11	15	1.408	0.17030	0.04515	.01755			.988		50.0	7
1		9	10	0.6591	0.4576	9634-2	1818-2			.9909		100.0	8
1	15	10	11	0.6591	0.4576	9634-2	1818-2			.9909		75.0	9
7	15	5	9	1.523	0.3251	0.0271	0.1487	8.32-3	.2709	.8018		150.0	10
7	15	11	15	0.6591	0.4576	9634-2	3818-2			.9909		50.0	11

Fig. B.2. Standard EQUIPOISE Input Form. Data refers to sample problem.

Page 19, Fig. B.2. On card 2, F.I. should be zero (or blank) and S.I. should be +1.

On card 8, row 2 should read 15. ERRATA

REAL TEST CASE (CURE)

REACTOR SPECIFICATIONS

I(ROWS)=15 J(COLM)=15 NO.REG.= 7 BND.COND.(T,R,B)=0,0,1 I(NORM)=14 J(NORM)= 2 EPI=10.000E-04

MESH SPECIFICATIONS

I	DELZ					
1	11.430	7	2.857	14	5.715	15

J	DELR									
1	3.500	2	1.750	5	3.000	9	0.635	11	7.500	15

REGION SPECIFICATIONS

REG	I1	I2	J1	J2	D1	D2	SIG1	SIG2	NUSF1	NUSF2	RES.ESCAPE	PHI1	PHI2
1	1	15	1	5	1.408E 00	1.703E-01	4.515E-02	1.755E-02	0.	0.	9.880E-01	0.	1.000E 02
2	1	7	5	9	1.408E 00	1.703E-01	4.515E-02	1.755E-02	0.	0.	9.880E-01	0.	1.000E 02
3	1	7	11	15	1.408E 00	1.703E-01	4.515E-02	1.755E-02	0.	0.	9.880E-01	0.	5.000E 01
4	1	15	9	10	6.591E-01	4.576E-01	9.634E-03	1.818E-03	0.	0.	9.909E-01	0.	1.000E 02
5	1	15	10	11	6.591E-01	4.576E-01	9.634E-03	1.818E-03	0.	0.	9.909E-01	0.	7.500E 01
6	7	15	5	9	1.523E 00	3.251E-01	2.710E-02	1.487E-01	8.320E-03	2.709E-01	8.018E-01	0.	1.500E 02
7	7	15	11	15	6.591E-01	4.576E-01	9.634E-03	3.818E-03	0.	0.	9.909E-01	0.	5.000E 01

Fig. B.3. On-Line Output. Sample problem.

```
BETAF =  1.660E 00     BETAS =  1.660E 00


ITERATION NO.  10  CONVR(NUCRIT)= 9.067E-02  CONUR(FLUX)= 1.805E 00  NU CRITICAL= 8.675E-01


ITERATION NO.  20  CONVR(NUCRIT)= 2.373E-02  CONUR(FLUX)= 3.457E-01  NU CRITICAL= 8.223E-01


ITERATION NO.  30  CONVR(NUCRIT)= 3.312E-03  CONUR(FLUX)= 2.333E-01  NU CRITICAL= 8.195E-01


ITERATION NO.  40  CONVR(NUCRIT)= 3.098E-04  CONUR(FLUX)= 3.253E-02  NU CRITICAL= 8.181E-01



ITERATION NO.  43  CONVR(NUCRIT)= 3.936E-05  CONVR(FLUX)= 9.233E-04  NU CRITICAL= 8.18260E-01  FLUX RATIO= 1.00001E 00
END OF CASE
```

Fig. B.3 (continued).

REAL TEST CASE (CURE)

REACTOR SPECIFICATIONS

I(ROWS)=15 J(COLM)=15 NO.REG.= 7 BND.COND.(T,R,B)=0,0,1 I(NORM)=14 J(NORM)= 2 EPI=10.000E-04

MESH SPECIFICATIONS

I	DELZ					
1	11.430	7	2.857	14	5.715	15

J	DELR								
1	3.500	2	1.750	5	3.000	9	0.635	11	7.500	15

REGION SPECIFICATIONS

REG	I1	I2	J1	J2	D1	D2	SIG1	SIG2	NUSF1	NUSF2	RES.ESCAPE	PHI1	PHI2
1	1	15	1	5	1.408E 00	1.703E-01	4.515E-02	1.755E-02	0.	0.	9.880E-01	0.	1.000E 02
2	1	7	5	9	1.408E 00	1.703E-01	4.515E-02	1.755E-02	0.	0.	9.880E-01	0.	1.000E 02
3	1	7	11	15	1.408E 00	1.703E-01	4.515E-02	1.755E-02	0.	0.	9.880E-01	0.	5.000E 01
4	1	15	9	10	6.591E-01	4.576E-01	9.634E-03	1.818E-03	0.	0.	9.909E-01	0.	1.000E 02
5	1	15	10	11	6.591E-01	4.576E-01	9.634E-03	1.818E-03	0.	0.	9.909E-01	0.	7.500E 01
6	7	15	5	9	1.523E 00	3.251E-01	2.710E-02	1.487E-01	8.320E-03	2.709E-01	8.018E-01	0.	1.500E 02
7	7	15	11	15	6.591E-01	4.576E-01	9.634E-03	3.818E-03	0.	0.	9.909E-01	0.	5.000E 01

Fig. B.4. Off-Line Output. Sample problem.

REAL TEST CASE (CURE)

ITERATION NO. 43 CONVR(NUCRIT)= 3.936E-05 CONVR(FLUX)= 6.976E-04 NU CRITICAL= 8.18260E-01 FLUX RATIO= 1.00001E 00

FAST FLUX(I,J)

	1	2	3	4	5	6	7	8	9	10
1	0.	0.	0.	0.	0.	0.	0.	0.	0.	0.
2	2.493E-03	2.493E-03	2.471E-03	2.436E-03	2.387E-03	2.271E-03	2.119E-03	1.937E-03	1.734E-03	1.634E-03
3	1.663E-02	1.663E-02	1.650E-02	1.627E-02	1.595E-02	1.517E-02	1.411E-02	1.282E-02	1.135E-02	1.064E-02
4	1.081E-01	1.081E-01	1.074E-01	1.062E-01	1.044E-01	9.970E-02	9.268E-02	8.355E-02	7.296E-02	6.784E-02
5	6.919E-01	6.919E-01	6.912E-01	6.887E-01	6.829E-01	6.609E-01	6.172E-01	5.523E-01	4.724E-01	4.340E-01
6	4.217E 00	4.217E 00	4.277E 00	4.360E 00	4.437E 00	4.450E 00	4.216E 00	3.750E 00	3.100E 00	2.782E 00
7	2.198E 01	2.198E 01	2.327E 01	2.545E 01	2.852E 01	3.094E 01	3.003E 01	2.683E 01	2.124E 01	1.782E 01
8	2.928E 01	2.928E 01	3.157E 01	3.567E 01	4.215E 01	4.584E 01	4.476E 01	4.123E 01	3.518E 01	3.057E 01
9	3.612E 01	3.612E 01	3.903E 01	4.417E 01	5.198E 01	5.637E 01	5.531E 01	5.156E 01	4.496E 01	3.985E 01
10	4.206E 01	4.206E 01	4.544E 01	5.135E 01	6.027E 01	6.529E 01	6.423E 01	6.015E 01	5.282E 01	4.715E 01
11	4.703E 01	4.703E 01	5.078E 01	5.735E 01	6.726E 01	7.285E 01	7.174E 01	6.730E 01	5.924E 01	5.302E 01
12	5.097E 01	5.097E 01	5.503E 01	6.213E 01	7.285E 01	7.892E 01	7.774E 01	7.298E 01	6.430E 01	5.762E 01
13	5.384E 01	5.384E 01	5.812E 01	6.562E 01	7.694E 01	8.335E 01	8.212E 01	7.712E 01	6.797E 01	6.093E 01
14	5.558E 01	5.558E 01	6.000E 01	6.774E 01	7.942E 01	8.604E 01	8.479E 01	7.963E 01	7.019E 01	6.293E 01
15	5.558E 01	5.558E 01	6.000E 01	6.774E 01	7.942E 01	8.604E 01	8.479E 01	7.963E 01	7.019E 01	6.293E 01

Fig. B.4 (continued).

REAL TEST CASE (CURE)

FAST FLUX(I,J)

	11	12	13	14	15
1	0.	0.	0.	0.	0.
2	1.525E-03	9.115E-04	4.687E-04	1.870E-04	0.
3	9.866E-03	5.576E-03	2.706E-03	1.033E-03	0.
4	6.235E-02	3.255E-02	1.462E-02	5.270E-03	0.
5	3.933E-01	1.833E-01	7.456E-02	2.510E-02	0.
6	2.452E 00	9.668E-01	3.482E-01	1.086E-01	0.
7	1.444E 01	4.447E 00	1.412E 00	4.142E-01	0.
8	2.645E 01	7.942E 00	2.531E 00	7.467E-01	0.
9	3.522E 01	1.095E 01	3.535E 00	1.050E 00	0.
10	4.200E 01	1.344E 01	4.399E 00	1.315E 00	0.
11	4.738E 01	1.545E 01	5.110E 00	1.537E 00	0.
12	5.154E 01	1.699E 01	5.663E 00	1.711E 00	0.
13	5.453E 01	1.808E 01	6.059E 00	1.837E 00	0.
14	5.634E 01	1.873E 01	6.296E 00	1.912E 00	0.
15	5.634E 01	1.873E 01	6.296E 00	1.912E 00	0.

Fig. B.4 (continued).

REAL TEST CASE (CURE)

SLOW FLUX(I,J)

	1	2	3	4	5	6	7	8	9	10
1	0.	0.	0.	0.	0.	0.	0.	0.	0.	0.
2	9.141E-03	9.141E-03	9.067E-03	8.945E-03	8.777E-03	8.591E-03	7.918E-03	7.428E-03	7.057E-03	6.995E-03
3	6.026E-02	6.026E-02	5.978E-02	5.897E-02	5.784E-02	5.518E-02	5.177E-02	4.804E-02	4.485E-02	4.439E-02
4	3.812E-01	3.812E-01	3.784E-01	3.736E-01	3.667E-01	3.497E-01	3.263E-01	2.985E-01	2.714E-01	2.681E-01
5	2.294E 00	2.294E 00	2.281E 00	2.256E 00	2.219E 00	2.121E 00	1.971E 00	1.773E 00	1.549E 00	1.525E 00
6	1.220E 01	1.220E 01	1.211E 01	1.194E 01	1.167E 01	1.113E 01	1.033E 01	9.153E 00	7.597E 00	7.443E 00
7	4.705E 01	4.705E 01	4.491E 01	4.019E 01	3.096E 01	2.444E 01	2.233E 01	2.063E 01	2.024E 01	2.055E 01
8	5.628E 01	5.628E 01	5.175E 01	4.130E 01	1.901E 01	1.122E 01	9.883E 00	9.808E 00	1.379E 01	1.608E 01
9	6.634E 01	6.634E 01	6.039E 01	4.696E 01	1.944E 01	1.028E 01	8.921E 00	9.110E 00	1.358E 01	1.592E 01
10	7.612E 01	7.612E 01	6.916E 01	5.358E 01	2.182E 01	1.133E 01	9.810E 00	1.002E 01	1.467E 01	1.711E 01
11	8.475E 01	8.475E 01	7.697E 01	5.959E 01	2.422E 01	1.254E 01	1.086E 01	1.106E 01	1.598E 01	1.858E 01
12	9.175E 01	9.175E 01	8.332E 01	6.450E 01	2.621E 01	1.356E 01	1.174E 01	1.195E 01	1.716E 01	1.992E 01
13	9.688E 01	9.688E 01	8.798E 01	6.811E 01	2.767E 01	1.432E 01	1.240E 01	1.261E 01	1.807E 01	2.096E 01
14	10.000E 01	10.000E 01	9.082E 01	7.030E 01	2.856E 01	1.478E 01	1.280E 01	1.301E 01	1.863E 01	2.160E 01
15	10.000E 01	10.000E 01	9.082E 01	7.030E 01	2.856E 01	1.478E 01	1.280E 01	1.301E 01	1.863E 01	2.160E 01

Fig. B.4 (continued).

REAL TEST CASE (CURE)

SLOW FLUX(I,J)

	11	12	13	14	15
1	0.	0.	0.	0.	0.
2	6.840E-03	3.529E-03	1.752E-03	6.930E-04	0.
3	4.336E-02	2.141E-02	1.008E-02	3.825E-03	0.
4	2.615E-01	1.225E-01	5.409E-02	1.952E-02	0.
5	1.486E 00	6.605E-01	2.730E-01	9.376E-02	0.
6	7.260E 00	3.181E 00	1.272E 00	4.287E-01	0.
7	2.089E 01	1.228E 01	5.682E 00	2.114E 00	0.
8	1.787E 01	1.379E 01	7.124E 00	2.799E 00	0.
9	1.782E 01	1.547E 01	8.450E 00	3.417E 00	0.
10	1.909E 01	1.720E 01	9.648E 00	3.962E 00	0.
11	2.068E 01	1.882E 01	1.069E 01	4.424E 00	0.
12	2.216E 01	2.020E 01	1.153E 01	4.796E 00	0.
13	2.330E 01	2.124E 01	1.216E 01	5.069E 00	0.
14	2.401E 01	2.188E 01	1.254E 01	5.234E 00	0.
15	2.401E 01	2.188E 01	1.254E 01	5.234E 00	0.

Fig. B.4 (continued).

```
      REAL TEST CASE (CURE)

TOTAL FAST GROUP PRODUCTION  =  1.18723E 04

TOTAL SLOW GROUP PRODUCTION  =  8.41700E 04

TOTAL FAST GROUP ABSORPTION  =  8.09230E 03

TOTAL SLOW GROUP ABSORPTION  =  6.76266E 04

TOTAL FAST GROUP TOP LEAKAGE =  6.95255E-01

TOTAL SLOW GROUP TOP LEAKAGE =  3.63933E-01

TOTAL FAST GROUP RIT LEAKAGE =  1.04521E 03

TOTAL SLOW GROUP RIT LEAKAGE =  1.82243E 03

TOTAL FAST GROUP BOT LEAKAGE =  0.

TOTAL SLOW GROUP BOT LEAKAGE =  0.


REGION ABSORPTIONS

REGION    FAST ABSORP    SLOW ABSORP
   1      1.18164E 02    4.59540E 03
   2      1.11745E 02    4.57029E 03
   3      7.65647E 01    6.83291E 03
   4      9.05816E 00    8.79487E 01
   5      8.27883E 00    9.82207E 01
   6      7.66451E 03    4.62018E 04
   7      1.03981E 02    5.23999E 03
```

Fig. B.4 (continued).

REAL TEST CASE (CURE)

SOURCE(I,J)

	1		2		3		4		5	
1	0.	0.	0.	0.	0.	0.	0.	0.	0.	0.
	0.	0.	0.	0.	0.	0.	0.	0.	0.	0.
2	0.	0.	0.	0.	0.	0.	0.	0.	0.	0.
	0.	0.	0.	0.	0.	0.	0.	0.	0.	0.
3	0.	0.	0.	0.	0.	0.	0.	0.	0.	0.
	0.	0.	0.	0.	0.	0.	0.	0.	0.	0.
4	0.	0.	0.	0.	0.	0.	0.	0.	0.	0.
	0.	0.	0.	0.	0.	0.	0.	0.	0.	0.
5	0.	0.	0.	0.	0.	0.	0.	0.	0.	0.
	0.	0.	0.	0.	0.	0.	0.	0.	0.	0.
6	0.	0.	0.	0.	0.	0.	0.	0.	0.	0.
	0.	0.	0.	0.	0.	0.	0.	0.	0.	0.
7	0.	0.	0.	0.	0.	0.	0.	0.	0.	0.
	0.	0.	0.	0.	0.	0.	0.	0.	0.	8.624E 00
8	0.	0.	0.	0.	0.	0.	0.	0.	0.	5.500E 00
	0.	0.	0.	0.	0.	0.	0.	0.	0.	5.500E 00
9	0.	0.	0.	0.	0.	0.	0.	0.	0.	5.698E 00
	0.	0.	0.	0.	0.	0.	0.	0.	0.	5.698E 00
10	0.	0.	0.	0.	0.	0.	0.	0.	0.	6.414E 00
	0.	0.	0.	0.	0.	0.	0.	0.	0.	6.414E 00
11	0.	0.	0.	0.	0.	0.	0.	0.	0.	7.120E 00
	0.	0.	0.	0.	0.	0.	0.	0.	0.	7.120E 00
12	0.	0.	0.	0.	0.	0.	0.	0.	0.	7.705E 00
	0.	0.	0.	0.	0.	0.	0.	0.	0.	7.705E 00
13	0.	0.	0.	0.	0.	0.	0.	0.	0.	8.136E 00
	0.	0.	0.	0.	0.	0.	0.	0.	0.	8.136E 00
14	0.	0.	0.	0.	0.	0.	0.	0.	0.	8.398E 00
	0.	0.	0.	0.	0.	0.	0.	0.	0.	8.398E 00

Fig. B.4 (continued).

```
        REAL TEST CASE (CURE)
SOURCE(I,J)
                1                   2                   3                   4                   5
15   0.         0.         0.         0.         0.         0.         0.         0.         0.         8.398E 00
     0.         0.         0.         0.         0.         0.         0.         0.         0.         0.
```

Fig. B.4 (continued).

REAL TEST CASE (CURE)

SOURCE(I,J)

	6		7		8		9		10	
1	0.	0.	0.	0.	0.	0.	0.	0.	0.	0.
	0.	0.	0.	0.	0.	0.	0.	0.	0.	0.
2	0.	0.	0.	0.	0.	0.	0.	0.	0.	0.
	0.	0.	0.	0.	0.	0.	0.	0.	0.	0.
3	0.	0.	0.	0.	0.	0.	0.	0.	0.	0.
	0.	0.	0.	0.	0.	0.	0.	0.	0.	0.
4	0.	0.	0.	0.	0.	0.	0.	0.	0.	0.
	0.	0.	0.	0.	0.	0.	0.	0.	0.	0.
5	0.	0.	0.	0.	0.	0.	0.	0.	0.	0.
	0.	0.	0.	0.	0.	0.	0.	0.	0.	0.
6	0.	0.	0.	0.	0.	0.	0.	0.	0.	0.
	0.	0.	0.	0.	0.	0.	0.	0.	0.	0.
7	0.	0.	0.	0.	0.	0.	0.	0.	0.	0.
	6.879E 00	6.879E 00	6.300E 00	6.300E 00	5.811E 00	5.811E 00	5.659E 00	0.	0.	0.
8	3.421E 00	3.421E 00	3.050E 00	3.050E 00	3.000E 00	3.000E 00	4.028E 00	0.	0.	0.
	3.421E 00	3.421E 00	3.050E 00	3.050E 00	3.000E 00	3.000E 00	4.028E 00	0.	0.	0.
9	3.254E 00	3.254E 00	2.877E 00	2.877E 00	2.897E 00	2.897E 00	4.052E 00	0.	0.	0.
	3.254E 00	3.254E 00	2.877E 00	2.877E 00	2.897E 00	2.897E 00	4.052E 00	0.	0.	0.
10	3.612E 00	3.612E 00	3.192E 00	3.192E 00	3.214E 00	3.214E 00	4.414E 00	0.	0.	0.
	3.612E 00	3.612E 00	3.192E 00	3.192E 00	3.214E 00	3.214E 00	4.414E 00	0.	0.	0.
11	4.003E 00	4.003E 00	3.538E 00	3.538E 00	3.555E 00	3.555E 00	4.823E 00	0.	0.	0.
	4.003E 00	4.003E 00	3.538E 00	3.538E 00	3.555E 00	3.555E 00	4.823E 00	0.	0.	0.
12	4.331E 00	4.331E 00	3.828E 00	3.828E 00	3.843E 00	3.843E 00	5.185E 00	0.	0.	0.
	4.331E 00	4.331E 00	3.828E 00	3.828E 00	3.843E 00	3.843E 00	5.185E 00	0.	0.	0.
13	4.573E 00	4.573E 00	4.042E 00	4.042E 00	4.057E 00	4.057E 00	5.460E 00	0.	0.	0.
	4.573E 00	4.573E 00	4.042E 00	4.042E 00	4.057E 00	4.057E 00	5.460E 00	0.	0.	0.
14	4.720E 00	4.720E 00	4.173E 00	4.173E 00	4.187E 00	4.187E 00	5.630E 00	0.	0.	0.
	4.720E 00	4.720E 00	4.173E 00	4.173E 00	4.187E 00	4.187E 00	5.630E 00	0.	0.	0.

Fig. B.4 (continued).

```
        REAL TEST CASE (CURE)
SOURCE(I,J)
                6                       7                       8                       9                       10
15   4.720E 00 4.720E 00   4.173E 00 4.173E 00   4.187E 00 4.187E 00   5.630E 00 0.          0.          0.
     0.        0.          0.        0.          0.        0.          0.        0.          0.          0.
```

Fig. B.4 (continued).

REAL TEST CASE (CURE)

SOURCE(I,J)

	11		12		13		14		15	
1	0.	0.	0.	0.	0.	0.	0.	0.	0.	0.
	0.	0.	0.	0.	0.	0.	0.	0.	0.	0.
2	0.	0.	0.	0.	0.	0.	0.	0.	0.	0.
	0.	0.	0.	0.	0.	0.	0.	0.	0.	0.
3	0.	0.	0.	0.	0.	0.	0.	0.	0.	0.
	0.	0.	0.	0.	0.	0.	0.	0.	0.	0.
4	0.	0.	0.	0.	0.	0.	0.	0.	0.	0.
	0.	0.	0.	0.	0.	0.	0.	0.	0.	0.
5	0.	0.	0.	0.	0.	0.	0.	0.	0.	0.
	0.	0.	0.	0.	0.	0.	0.	0.	0.	0.
6	0.	0.	0.	0.	0.	0.	0.	0.	0.	0.
	0.	0.	0.	0.	0.	0.	0.	0.	0.	0.
7	0.	0.	0.	0.	0.	0.	0.	0.	0.	0.
	0.	0.	0.	0.	0.	0.	0.	0.	0.	0.
8	0.	0.	0.	0.	0.	0.	0.	0.	0.	0.
	0.	0.	0.	0.	0.	0.	0.	0.	0.	0.
9	0.	0.	0.	0.	0.	0.	0.	0.	0.	0.
	0.	0.	0.	0.	0.	0.	0.	0.	0.	0.
10	0.	0.	0.	0.	0.	0.	0.	0.	0.	0.
	0.	0.	0.	0.	0.	0.	0.	0.	0.	0.
11	0.	0.	0.	0.	0.	0.	0.	0.	0.	0.
	0.	0.	0.	0.	0.	0.	0.	0.	0.	0.
12	0.	0.	0.	0.	0.	0.	0.	0.	0.	0.
	0.	0.	0.	0.	0.	0.	0.	0.	0.	0.
13	0.	0.	0.	0.	0.	0.	0.	0.	0.	0.
	0.	0.	0.	0.	0.	0.	0.	0.	0.	0.
14	0.	0.	0.	0.	0.	0.	0.	0.	0.	0.
	0.	0.	0.	0.	0.	0.	0.	0.	0.	0.

Fig. B.4 (continued).

```
        REAL TEST CASE (CURE)
SOURCE(I,J)
                11                  12                  13                  14                  15
15    0.          0.          0.          0.          0.          0.          0.          0.          0.          0.
      0.          0.          0.          0.          0.          0.          0.          0.          0.          0.
```

Fig. B.4 (continued).

On the last iteration of the case the following item is also printed:

FLUX RATIO, the ratio of absorptions calculated on the basis of unnormalized fluxes for the last iteration to the absorptions calculated on the basis of the normalized fluxes for the previous iteration.

The off-line edit contains items 1 through 9 above, as well as the following information:

12. The flux values at every point normalized to a value of 100 at the normalization point.

13. A neutron balance list calculated from the printed-out fluxes:

    (*a*) Total fast-group productions,

    (*b*) Total slow-group productions,

    (*c*) Total fast-group absorptions,

    (*d*) Total slow-group absorptions,

    (*e*) Total fast-group leakage through the top boundary,

    (*f*) Total slow-group leakage through the top boundary,

    (*g*) Total fast-group leakage through the right-hand boundary,

    (*h*) Total slow-group leakage through the right-hand boundary,

    (*i*) Total fast-group leakage through the bottom boundary,

    (*j*) Total slow-group leakage through the bottom boundary.

[The product of the eigenvalue (NUCRITICAL) by the sum of items (*a*) and (*b*) is equal to the sum of items (*c*) through (*j*).]

14. A summary of the fast and slow absorptions by region, calculated from the printed-out fluxes.

15. The source density at each quadrant of each mesh point based on the printed fluxes.

The expressions used to compute these items of output are given in Appendix D.

Appendix C

MACHINE OPERATING INSTRUCTIONS

Master Tape Preparation. – Proceed as follows:

I. Dial a blank tape to logical one.

II. Ready program deck in card reader – press "Clear" and then "Load Cards."

III. Normal stop HPR, 13, 0.

IV. Rewind logical one.

Running the Program. – Proceed as follows:

I. Tape selection:

1. Master program tape	Tape 1
2. Blank	Tape 2
3. Blank	Tape 3
4. Blank	Tape 4
5. Blank	Tape 5
6. Blank	Tape 6
7. BCD output	Tape 9

II. Ready input data cards in card reader – press "Clear" and then "Load Tape."

III. Normal stop HPR, 77777, 0.

IV. Print tape 9 under program control, one file. Note: tape 9 is not rewound after the machine stop just mentioned.

Programmed Stops. – There are three programmed stops, other than the normal stops produced by FORTRAN. These stops are recognized by examining the storage register.

1. HPR, 77777, 0: normal end of calculation stop.
2. HPR, 11111, 0: drum error in convergence calculation – press "Start"; the effect of this error will be temporary.
3. HPR, 22222, 0: drum error in flux calculation or in output calculation – press "Start" to restart the calculation at, at most, ten iterations back.
4. Assume machine error for any stops other than those listed above, or FORTRAN programmed stops. Rewind all tapes, and do a manual transfer to octal location 116; this will restart the calculation no more than ten iterations back.

Removing a Problem. – If sense-switch six is put in the down position at any time during the running of a case, the code will proceed as if the convergence has been satisfied and will write the output and stop, or it will go to the next problem, as the case may be.

Tape and Drum Usage. – The following list gives the tape unit number and its use by EQUIPOISE.

1. Tape 1	Master program tape
2. Tape 2	Binary tape for storage of the region specification input numbers
3. Tape 3	Constants storage
4. Tape 4	Constants storage
5. Tape 5	Used for storing the fast and slow fluxes at iteration $t-1$

6. Tape 6 — Used for storing the fast and slow fluxes at iteration $t-2$ during the calculation; at the end of a calculation, the final fast- and slow-flux distributions are written on this tape in binary form

7. Tape 9 — BCD output tape

The two drum units are used for storing fast- and slow-group constants. During the main flux iteration calculation no tapes are used; all constants being read from drums.

Appendix D

DERIVATION OF VARIOUS EQUATIONS USED IN THE PROGRAM

The Five-Point Difference Equations in R-Z (Cylindrical) Geometry. – In Fig. D.1, the mesh points extend radially along the I axis and axially along the J axis. Consider the area represented by the dotted lines as denoting a cross section through a volume of revolution whose edges lie halfway between mesh points; i.e., the radius of the left-hand surface is at $R_I - (\Delta R_L/2)$, that of the right-hand surface is at $R_I + (\Delta R_R/2)$, etc. The physical reactor is

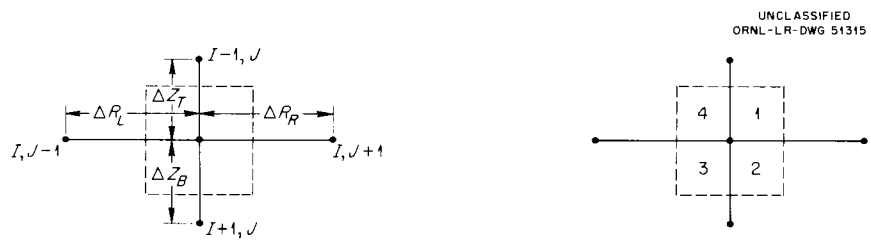

Fig. D.1. Diagram Used for the Five-Point Difference Equations.

approximated as a set of difference-equation balances which say that when the computations have converged, the rate at which neutrons diffuse into each such volume plus the rate at which neutrons are produced in each volume must equal the rate at which they are absorbed in each volume. Since the input data is only a guess at the critical condition, a balance is obtained by multiplying the input value of $\nu\Sigma_f$ at every point by the eigenvalue λ. Lambda may be regarded as the ratio of the value of ν which would make the reactor critical to the physical value of ν used. Assume, as shown in the right-hand diagram of Fig. D.1 that four materials meet at point I,J and that the distances to adjacent points are all different. The balance for the fast group is:

$$D_{F1}\,2\pi\left(R_J+\frac{\Delta R_R}{2}\right)\frac{\Delta Z_T}{2}\,\frac{[\Phi_F(I,J+1)-\Phi_F(I,J)]}{\Delta R_R}+$$

$$+D_{F2}\,2\pi\left(R_J+\frac{\Delta R_R}{2}\right)\frac{\Delta Z_B}{2}\,\frac{[\Phi_F(I,J+1)-\Phi_F(I,J)]}{\Delta R_R}+$$

$$+D_{F3}\,2\pi\left(R_J-\frac{\Delta R_L}{2}\right)\frac{\Delta Z_B}{2}\,\frac{[\Phi_F(I,J-1)-\Phi_F(I,J)]}{\Delta R_L}+$$

$$+D_{F4}\,2\pi\left(R_J-\frac{\Delta R_L}{2}\right)\frac{\Delta Z_T}{2}\,\frac{[\Phi_F(I,J-1)-\Phi_F(I,J)]}{\Delta R_L}+$$

$$+D_{F1}\,2\pi\left(R_J+\frac{\Delta R_R}{4}\right)\frac{\Delta R_R}{2}\,\frac{[\Phi_F(I-1,J)-\Phi_F(I,J)]}{\Delta Z_T}+$$

$$+D_{F2}\,2\pi\left(R_J+\frac{\Delta R_R}{4}\right)\frac{\Delta R_R}{2}\,\frac{[\Phi_F(I+1,J)-\Phi_F(I,J)]}{\Delta Z_B}+$$

$$+D_{F3}\,2\pi\left(R_J-\frac{\Delta R_L}{4}\right)\frac{\Delta R_L}{2}\,\frac{[\Phi_F(I+1,J)-\Phi_F(I,J)]}{\Delta Z_B}+$$

$$+D_{F4}\,2\pi\left(R_J-\frac{\Delta R_L}{4}\right)\frac{\Delta R_L}{2}\,\frac{[\Phi_F(I-1,J)-\Phi_F(I,J)]}{\Delta Z_T}-$$

$$-\Phi_F(I,J)\,2\pi\left[\Sigma_F^1\left(\frac{\Delta Z_T}{2}\right)\left(\frac{\Delta R_R}{2}\right)R_J+\frac{\Delta R_R}{4}+\Sigma_F^2\left(\frac{\Delta Z_B}{2}\right)\left(\frac{\Delta R_R}{2}\right)\left(R_J+\frac{\Delta R_R}{4}\right)+\right.$$

$$\left.+\Sigma_F^3\left(\frac{\Delta Z_B}{2}\right)\left(\frac{\Delta R_L}{2}\right)\left(R_J-\frac{\Delta R_L}{4}\right)+\Sigma_F^4\left(\frac{\Delta Z_T}{2}\right)\left(\frac{\Delta R_L}{2}\right)\left(R_J-\frac{\Delta R_L}{4}\right)\right]$$

$$=2\pi\lambda\left\{\Phi_F(I,J)\left[\nu\Sigma_{fF}^1\left(\frac{\Delta Z_T}{2}\right)\left(\frac{\Delta R_R}{2}\right)\left(R_J+\frac{\Delta R_R}{4}\right)+\nu\Sigma_{fF}^2\left(\frac{\Delta Z_B}{2}\right)\left(\frac{\Delta R_R}{2}\right)\left(R_J+\frac{\Delta R_R}{4}\right)+\right.\right.$$

$$\left.+\nu\Sigma_{fF}^3\left(\frac{\Delta Z_B}{2}\right)\left(\frac{\Delta R_L}{2}\right)\left(R_J-\frac{\Delta R_L}{4}\right)+\nu\Sigma_{fF}^4\left(\frac{\Delta Z_B}{2}\right)\left(\frac{\Delta R_L}{2}\right)\left(R_J-\frac{\Delta R_L}{4}\right)\right]+$$

$$+\Phi_S(I,J)\left[\nu\Sigma_{fS}^1\left(\frac{\Delta Z_T}{2}\right)\left(\frac{\Delta R_R}{2}\right)\left(R_J+\frac{\Delta R_R}{4}\right)+\nu\Sigma_{fS}^2\left(\frac{\Delta Z_B}{2}\right)\left(\frac{\Delta R_R}{2}\right)\left(R_J+\frac{\Delta R_R}{4}\right)+\right.$$

$$\left.\left.+\nu\Sigma_{fS}^3\left(\frac{\Delta Z_B}{2}\right)\left(\frac{\Delta R_L}{2}\right)\left(R_J-\frac{\Delta R_L}{4}\right)+\nu\Sigma_{fS}^4\left(\frac{\Delta Z_T}{2}\right)\left(\frac{\Delta R_L}{2}\right)\left(R_J-\frac{\Delta R_L}{4}\right)\right]\right\}\ .$$

The thermal-group equation need not be written out because it is very similar to the fast-group equation. In the diffusion terms, D_F is replaced by D_S and the fast fluxes by thermal fluxes. In the absorption term, the Σ_F's are replaced by Σ_S's and $\Phi_F(I,J)$ by $\Phi_S(I,J)$. The source term on the right-hand side has no λ in it and is otherwise identical to the *fast* absorption term except that the Σ_F's are each multiplied by p, the resonance escape probability for the material in question. The equations may be simplified by combining the coefficients of the $\Phi(I,J)$ terms as well as by canceling the 2π.

Formulas for Certain Items of the Output List. – The neutron balance items are obtained by simple addition of all the pertinent terms in the equations. Thus there is no discrepancy (other than that occasioned by roundoffs and the lack of perfect convergence) between the difference equations and the integral terms which are printed.

(*a*) Total fast-group production –

$$\sum_I \sum_J \sum_{k=1}^{4} \left[\nu \Sigma_{fF}^k \Phi_F(I,J) \right] V_{I,J}^k \ ,$$

where $V_{I,J}^k$ is the volume of each subsection of the volume, e.g., $V_{I,J}^3$ would be

$$2\pi \left(\frac{\Delta Z_B}{2} \right) \left(\frac{\Delta R_L}{2} \right) \left(R_J - \frac{\Delta R_L}{4} \right) \ .$$

Summation over I extends from the mesh points on the second row to those on the next to the last row. Summation over J extends from the second column to the next to the last column. Summation will therefore be from axis of symmetry to zero flux boundary or axis of symmetry. In any case, the reactor volume will be covered insofar as it is specified by the input. (It is to be remembered that at zero-flux boundaries there will be no contribution to either productions or absorptions.) The formulas for total slow-group productions and for slow-group absorptions are quite similar to the one just given.

(*b*) Fast group absorption –

$$\sum_I \sum_J \sum_{k=1}^{4} \left[(1-p)\, \Sigma_F \right]^k \Phi_F(I,J)\, V_{I,J}^k \ .$$

(*c*) Leakage through various boundaries – Leakages are also calculated as sums of terms in the difference equation. Thus, leakage across a top boundary is computed by summing leakage terms along that boundary. There $\Phi(I,J)$ would be always zero and $\Phi(I-1,J)$ would be dropped. Only terms from the second row would contribute:

$$\sum_{J=2} \left\{ D_2 2\pi \left(R_J + \frac{\Delta R_R}{4} \right) \frac{\Delta R_R}{2} \frac{[\Phi(2,J)]}{\Delta Z_B} + D_3 2\pi \left(R_J - \frac{\Delta R_L}{4} \right) \frac{\Delta R_L}{2} \frac{[\Phi(2,J)]}{\Delta Z_B} \right\} \ ,$$

where the sum extends to the next to the last column in the mesh.

Conversion of Fluxes as Printed Out to Fluxes at a Given Power. – Let the total reactor power be W megawatts. Let μ be the number of fission neutrons produced per megawatt-second. Then $W\mu$ is the total number of fission neutrons produced per second at power W. Then any

flux in the reactor may be computed by multiplying the printed-out flux by $W\mu$ and dividing by the sum of the fast- and slow-neutron productions. It must be noted that W is the power developed in the part of the reactor considered in the calculation. Thus in the sample problem let the total power at which fluxes are desired be 100 Mw. At $I = 4$, $J = 4$, the fast flux printed out is 0.1062. The total production printed out is 9.60423×10^4 neutrons/sec. The flux at the point is therefore

$$\frac{\mu(0.1062)(100)}{9.60423 \times 10^4} \times \tfrac{1}{2} \ .$$

The factor $\frac{1}{2}$ accounts for the fact that *only half the reactor* was considered in the calculation. Assuming for the purpose of illustration that there are 3.38×10^{16} fissions/Mw-sec and that there are 2.5 neutrons per fission, the value of μ is $2.5 \times 3.38 \times 10^{16}$ neutrons/Mw-sec. The fast flux is then

$$\Phi(4,4)_{100\,\mathrm{Mw}} = \frac{2.5 \times 3.38 \times 10^{16} \times 0.1062 \times 100}{2 \times 9.60423 \times 10^4} = 4.67 \times 10^{12} \ .$$

(Note also that the eigenvalue was about 0.82, so that the reactor is far from critical.)

Power Density at Any Point. – The fission power density may be simply calculated from the source printout. Thus, at 100 Mw, the power density in the lower left quadrant adjacent to mesh point $I = 7$, $J = 9$, where there are 5.659 neutrons produced per cubic centimeter per second, is

$$\frac{5.659 \times 100}{9.60423 \times 10^4 \times 2} \frac{\mathrm{Mw}}{\mathrm{cm}^3} = 2950 \frac{\mathrm{kw}}{\mathrm{liter}} \ .$$

Appendix E

FORTRAN LIST OF THE CODE

```
CMAINCODE     EQUIPOISE MAIN CODE - 100                                18030101
      DIMENSION A1(25,25),A2(25,25),A3(25,25),A4(25,25),               18030105
     1A5(25,25),A6(25,25),A7(25,25),B1(25,25),B2(25,25),               18030107
     2B3(25,25),B4(25,25),B5(25,25),B6(25,25),                         18030109
     3PHIF1(25,25),PHIF2(25,25),PHIF3(25,25),PHIFEX(25,25),            18030111
     4PHIS1(25,25),PHIS2(25,25),PHIS3(25,25 ),PHISEX(25,25),           18030113
     5DELR(25),DELZ(25),R(25),JCL(25),ELR(25),IRO(25),                 18030115
     6ELZ(25),HOL(12),NCC(10)                                          18039901
      COMMON A1,A2,A3,A4,A5,A6,B1,B2,B3,B4,B5,B6,VERGL,VERGF,HOL,NCC,  18039903
     1A7,PHIF1,PHIF2,PHIF3,PHIFEX,PHIS1,PHIS2,PHIS3,                   18030203
     2PHISEX,DELR,DELZ,R,IMAX,JMAX,NORI,NORJ,NREG,NDELR,NDELZ,         18030205
     3MK,LAD,ITOP,IRIT,IBOT,PHIT1,PHIT2,PHIR1,PHIR2,PHIB1,PHIB2,       18030207
     4EPI,BETA,JCL,ELR,IRO,ELZ,IRO1,IRO2,JCL1,JCL2,D1,D2,SIG1,         18030209
     5SIG2,SFNU1,SFNU2,PROB,PHIK1,PHIK2,IT,IR,IB,ITC,IBC,LIM1,LIM2,    18030211
     6LIMI1,LIMI2,LIMJ1,LIMJ2,TEMP1,TEMP2,TEMP3,TEMP4,TEMP5,           18030213
     7TEMP6,TEMP7,TEMP8,IEND,NIT,XLAMDA,NCELL,BETAB1,SUMN1,            18030215
     8SUMN2,ILO,JLO,IHI,JHI,VERG,PHINOR,KEXT1,KEXT2,BETAB2,            18030217
     9XMULT,ABF,ABS,STL,SBL,SRL,PRODF,PRODS,FTL,FBL,FRL                18030219
      EQUIVALENCE (A1(1),B1(1),PHIF2(1)),(A2(1),B2(1),PHIF3(1)),       18030301
     1(A3(1),B3(1),PHIFEX(1)),(A4(1),B4(1),PHIS2(1)),                  18030303
     2(A5(1),B5(1),PHIS3(1)),(A6(1),B6(1),PHISEX(1)),                  18030305
     3(PHIF1(1),DELR(1)), (PHIF1(26),DELZ(1)),(PHIF1(51),R(1)),        18030307
     4(PHIF1(76),JCL(1)),(PHIF1(101),IRO(1)),(PHIF1(126),ELR(1)),      18030309
     5(PHIF1(151),ELZ(1))                                              18039905
  100 SENSE LIGHT 0                                                    18030401
      CALL PROG(13)                                                    18030403
      CALL INPUT                                                       18030405
      IF(IEND)131,101,101                                              18030407
  101 CALL PROG(14)                                                    18030409
      CALL OUT1
  102 CALL PROG(4)
      CALL CONST1
  103 CALL PROG(5)                                                     18030417
      CALL CONST2                                                      18030419
  104 CALL PROG(6)                                                     18030421
      CALL CONST3                                                      18030423
  105 CALL PROG(7)                                                     18030501
      CALL CONST4                                                      18030503
  106 CALL PROG(8)                                                     18030505
      CALL CONST5                                                      18030507
  111 CALL PROG(15)                                                    18030523
      CALL BETTA                                                       18030525
  112 CALL PROG(1)                                                     18030601
      CALL FLUX                                                        18030603
      IF(SENSE LIGHT 1)113,116                                         18030605
  113 PAUSE 22222                                                      18030607
  114 CALL PROG(18)                                                    18030609
      CALL RESTRT                                                      18030611
  115 GO TO 112                                                        18030613
  116 CALL PROG(2)                                                     18030615
      CALL EXTR                                                        18030617
  117 IF(SENSE LIGHT 2)120,118                                         18030619
  118 CALL PROG(3)                                                     18030621
      CALL MONTOR                                                      18030623
  119 GO TO 112                                                        18030625
  120 CALL PROG(9)                                                     18030701
```

```
      CALL OUT2                                                         18030703
  121 IF(SENSE LIGHT 1)122,124                                          18030705
  122 PAUSE 22222                                                       18030707
  123 CALL PROG(18)                                                     18030709
      CALL RESTRT                                                       18030711
      GO TO 112                                                         18030713
  124 CALL PROG(10)                                                     18030715
      CALL OUT22                                                        18030717
  125 CALL PROG(11)                                                     18030719
      CALL OUT3                                                         18030721
  126 CALL PROG(12)                                                     18030723
      CALL OUT33                                                        18030725
  127 IF(JLO)130,130,128                                                18039910
  128 CALL PROG(16)                                                     18030803
      CALL SOUR                                                         18030805
  129 CALL PROG(17)                                                     18030807
      CALL OUT4                                                         18030809
  130 GO TO 100                                                         18030811
  131 END FILE 9                                                        18030815
      STOP 77777                                                        18030817
      END(0,1,0,0,1)                                                    18030819
```

```
CFLUX SUB      EQUIPOISE FLUX SUB - 1000                                18030101
      SUBROUTINE FLUX                                                   18030102
      DIMENSION A1(25,25),A2(25,25),A3(25,25),A4(25,25),                18030105
     1A5(25,25),A6(25,25),A7(25,25),B1(25,25),B2(25,25),                18030107
     2B3(25,25),B4(25,25),B5(25,25),B6(25,25),                          18030109
     3PHIF1(25,25),PHIF2(25,25),PHIF3(25,25),PHIFEX(25,25),             18030111
     4PHIS1(25,25),PHIS2(25,25),PHIS3(25,25 ),PHISEX(25,25),            18030113
     5DELR(25),DELZ(25),R(25),JCL(25),ELR(25),IRO(25),                  18030115
     6ELZ(25),HOL(12),NCC(10)                                           18039901
      COMMON A1,A2,A3,A4,A5,A6,B1,B2,B3,B4,B5,B6,VERGL,VERGF,HOL,NCC,   18039903
     1A7,PHIF1,PHIF2,PHIF3,PHIFEX,PHIS1,PHIS2,PHIS3,                    18030203
     2PHISEX,DELR,DELZ,R,IMAX,JMAX,NORI,NORJ,NREG,NDELR,NDELZ,          18030205
     3MK,LAD,ITOP,IRIT,IBOT,PHIT1,PHIT2,PHIR1,PHIR2,PHIB1,PHIB2,        18030207
     4EPI,BETA,JCL,ELR,IRO,ELZ,IRO1,IRO2,JCL1,JCL2,D1,D2,SIG1,          18030209
     5SIG2,SFNU1,SFNU2,PROB,PHIK1,PHIK2,IT,IR,IB,ITC,IBC,LIM1,LIM2,     18030211
     6LIMI1,LIMI2,LIMJ1,LIMJ2,TEMP1,TEMP2,TEMP3,TEMP4,TEMP5,            18030213
     7TEMP6,TEMP7,TEMP8,IEND,NIT,XLAMDA,NCELL,BETAB1,SUMN1,             18030215
     8SUMN2,ILO,JLO,IHI,JHI,VERG,PHINOR,KEXT1,KEXT2,BETAB2,             18030217
     9XMULT,ABF,ABS,STL,SBL,SRL,PRODF,PRODS,FTL,FBL,FRL                 18030219
      EQUIVALENCE (A1(1),B1(1),PHIF2(1)),(A2(1),B2(1),PHIF3(1)),        18030301
     1(A3(1),B3(1),PHIFEX(1)),(A4(1),B4(1),PHIS2(1)),                   18030303
     2(A5(1),B5(1),PHIS3(1)),(A6(1),B6(1),PHISEX(1)),                   18030305
     3(PHIF1(1),DELR(1)), (PHIF1(26),DELZ(1)),(PHIF1(51),R(1)),         18030307
     4(PHIF1(76),JCL(1)),(PHIF1(101),IRO(1)),(PHIF1(126),ELR(1)),       18030309
     5(PHIF1(151),ELZ(1))                                               18039905
 1000 BETF = BETAB1                                                     18030401
      BETS = BETAB2                                                     18030403
      ILO = 0                                                           18030405
      NDO = 1                                                           18030407
      NXXXXX = 0                                                        18030409
      NXX = 0                                                           18030411
      NX = 0                                                            18030413
 1001 DO 1054 L = 1,10                                                  18030501
      IF(LAD)1002,1002,1020                                             18030503
 1002 IF(NXXXXX)1003,1003,1012                                          18030505
 1003 IF(NX)1004,1004,1009                                              18030507
 1004 ASSIGN 1009 TO NADRE1                                             18030509
      GO TO 1006                                                        18030511
 1005 ASSIGN 1027 TO NADRE1                                             18030513
 1006 DO 1007 M = 1,3                                                   18030515
      READ DRUM 3,0000,B1                                               18030517
      READ DRUM 3,0680,B2                                               18030519
      READ DRUM 3,1370,B3                                               18030521
      READ DRUM 4,0000,B4                                               18030523
      READ DRUM 4,0680,B5                                               18030525
      READ DRUM 4,1370,B6                                               18030601
      CALL SUBOUT(SUMN2,NCELL,3750)                                     18030603
      IF(SENSE LIGHT 1)1007,1008                                        18030605
 1007 CONTINUE                                                          18030607
      SENSE LIGHT 1                                                     18030609
      GO TO 1055                                                        18030611
 1008 GO TO NADRE1,(1009,1027)                                          18030613
 1009 ABF = 0.0                                                         18030615
      ABS = 0.0                                                         18030617
      SLEK = 0.0                                                        18030619
      DO 1010 I = 2,LIM1                                                18030701
```

```
      DO 1010 J = 2,LIM2                                                18030703
      ABF = ABF+PHIF1(I,J)*(A7(I,J)-B5(I,J))                            18030705
      ABS = ABS+PHIS1(I,J)*B6(I,J)                                      18030707
      SLEK = SLEK+PHIS1(I,J)*(B1(I,J)+B2(I,J)+B3(I,J)+                  18030709
     1B4(I,J))-(PHIS1(I-1,J)*B1(I,J)+PHIS1(I+1,J)*B2(I,J)+              18030711
     2PHIS1(I,J+1)*B3(I,J)+PHIS1(I,J-1)*B4(I,J))                        18030713
 1010 CONTINUE                                                          18030715
 1011 ASSIGN 1016 TO NADRE2                                             18030717
      GO TO 1013                                                        18030719
 1012 ASSIGN 1022 TO NADRE2                                             18030721
 1013 DO 1014 M = 1,3                                                   18030801
      READ DRUM 1,0000,A1                                               18030803
      READ DRUM 1,0680,A2                                               18030805
      READ DRUM 1,1370,A3                                               18030807
      READ DRUM 2,0000,A4                                               18030809
      READ DRUM 2,0680,A5                                               18030811
      READ DRUM 2,1370,A6                                               18030813
      CALL SUBOUT(SUMN1,NCELL,3750)                                     18030815
      IF(SENSE LIGHT 1)1014,1015                                        18030817
 1014 CONTINUE                                                          18030819
      SENSE LIGHT 1                                                     18030821
      GO TO 1055                                                        18030823
 1015 GO TO NADRE2,(1016,1022)                                          18030901
 1016 PRODF = 0.0                                                       18030903
      PRODS = 0.0                                                       18030905
      FLEK = 0.0                                                        18030907
      DO 1017 I = 2,LIM1                                                18030909
      DO 1017 J = 2,LIM2                                                18030911
      PRODF = PRODF+PHIF1(I,J)*A6(I,J)                                  18030913
      PRODS = PRODS+PHIS1(I,J)*A5(I,J)                                  18030915
      FLEK = FLEK+PHIF1(I,J)*(A1(I,J)+A2(I,J)+A3(I,J)+                  18030917
     1A4(I,J))-(PHIF1(I-1,J)*A1(I,J)+PHIF1(I+1,J)*A2(I,J)+              18030919
     2PHIF1(I,J+1)*A3(I,J)+PHIF1(I,J-1)*A4(I,J))                        18030921
 1017 CONTINUE                                                          18030923
      XYZZZZ = (ABF+ABS+SLEK+FLEK)/(PRODF+PRODS)                        18031001
      XYYZZZ = ABSF(XLAMDA/XYZZZZ-1.0)                                  18031003
      IF(XYYZZZ-0.001)1018,1018,1019                                    18031005
 1018 NXXXXX = 1                                                        18031007
      IF(VERGL-EPI)100,100,1019                                         18039920
  100 NDO = 5                                                           18039922
      NX = 7                                                            18031012
 1019 XLAMDA = XYZZZZ                                                   18031013
      GO TO 1022                                                        18031014
 1020 XLAMDA = 1.0                                                      18031015
      GO TO 1012                                                        18031025
 1022 DO 1026 M = 1,NDO                                                 18031101
      DO 1025 I = 2,LIM1                                                18031103
      DO 1025 J = 2,LIM2                                                18031105
      XYZ = (PHIF1(I-1,J)*A1(I,J)+PHIF1(I+1,J)*A2(I,J)+                 18031107
     1PHIF1(I,J+1)*A3(I,J)+PHIF1(I,J-1)*A4(I,J)+XLAMDA*                 18031109
     2(PHIS1(I,J)*A5(I,J)+PHIF1(I,J)*A6(I,J)))/                         18031111
     3(A1(I,J)+A2(I,J)+A3(I,J)+A4(I,J)+A7(I,J))                         18031113
 1023 XYZZ = (1.0-BETF)*PHIF1(I,J)+BETF*XYZ                             18031115
      IF(XYZZ)1024,1025,1025                                            18031117
 1024 BETF = (BETF+1.0)/2.0                                             18031119
      GO TO 1023                                                        18031121
```

```
1025 PHIF1(I,J) = XYZZ                                                  18031123
1026 CONTINUE                                                           18031124
     GO TO 1005                                                         18031125
1027 DO 1031 M = 1,NDO                                                  18031201
     DO 1030 I = 2,LIM1                                                 18031203
     DO 1030 J = 2,LIM2                                                 18031205
     XYZ = (PHIS1(I-1,J)*B1(I,J)+PHIS1(I+1,J)*B2(I,J)+                  18031207
    1PHIS1(I,J+1)*B3(I,J)+PHIS1(I,J-1)*B4(I,J)+PHIF1(I,J)*B5(I,J))/     18031209
    2(B1(I,J)+B2(I,J)+B3(I,J)+B4(I,J)+B6(I,J))                          18031211
1028 XYZZ = (1.0-BETS)*PHIS1(I,J)+BETS*XYZ                              18031213
     IF(XYZZ)1029,1030,1030                                             18031215
1029 BETS = (BETS+1.0)/2.0                                              18031217
     GO TO 1028                                                         18031219
1030 PHIS1(I,J) = XYZZ                                                  18031221
1031 CONTINUE                                                           18031223
     NIT = NIT+1                                                        18031301
     NX = NX+1                                                          18031303
1032 IF(10-NX)1950,1950,1033                                            18031305
1033 X = 100.0/PHIS1(NORI,NORJ)                                         18031307
     DO 1972 I = 2,LIM1                                                 18039905
     DO 1972 J = 2,LIM2                                                 18039907
     PHIF1(I,J) = PHIF1(I,J)*X                                          18039909
1972 PHIS1(I,J) = PHIS1(I,J)*X                                          18039911
1950 DO 1952 I = 1,IMAX                                                 18039901
     PHIF1(I,1) = PHIF1(I,2)                                            18039903
     PHIS1(I,1) = PHIS1(I,2)                                            18039905
     IF(IR)1951,1952,1952                                               18039907
1951 PHIF1(I,JMAX) = PHIF1(I,LIM2)                                      18039909
     PHIS1(I,JMAX) = PHIS1(I,LIM2)                                      18039910
1952 CONTINUE                                                           18039911
1960 DO 1964 J = 1,JMAX                                                 18039913
     IF(IT)1961,1962,1962                                               18039914
1961 PHIF1(1,J) = PHIF1(2,J)                                            18039916
     PHIS1(1,J) = PHIS1(2,J)                                            18039917
1962 IF(IB)1963,1964,1964                                               18039919
1963 PHIF1(IMAX,J) = PHIF1(LIM1,J)                                      18039921
     PHIS1(IMAX,J) = PHIS1(LIM1,J)                                      18039922
1964 CONTINUE                                                           18039924
     ~~CALL OUT1~~                                                      ~~18030411~~ 18030411
 1~~02 CALL PROG(4)~~                                                   ~~18030413~~
     ~~CALL CONST1~~                                                    ~~18030415~~
1049 IF(NX-8)1053,1050,1050                                             ~~18031314~~
1050 NXX = NXX+1                                                        18031303
     IF(NXX-2)1051,1052,1055                                            18031317
1051 WRITE TAPE 6,((PHIF1(I,J),I=1,IMAX),J=1,JMAX)                      18031307
     WRITE TAPE 6,((PHIS1(I,J),I=1,IMAX),J=1,JMAX)                      18031309
     REWIND 6                                                           18031311
     GO TO 1053                                                         18031312
1052 WRITE TAPE5,((PHIF1(I,J),I=1,IMAX),J=1,JMAX)                       18031313
     WRITE TAPE5,((PHIS1(I,J),I=1,IMAX),J=1,JMAX)                       18031315
     REWIND 5                                                           18031317
1053 CONTINUE                                                           18031319
1054 CONTINUE                                                           18031321
1055 RETURN                                                             18031323
     END(0,1,0,0,1)                                                     18031325
```

```
CEXTR SUB     EQUIPOISE EXTR SUB - 3000                                18030101
      SUBROUTINE EXTR                                                  18030102
      DIMENSION A1(25,25),A2(25,25),A3(25,25),A4(25,25),               18030105
     1A5(25,25),A6(25,25),A7(25,25),B1(25,25),B2(25,25),               18030107
     2B3(25,25),B4(25,25),B5(25,25),B6(25,25),                         18030109
     3PHIF1(25,25),PHIF2(25,25),PHIF3(25,25),PHIFEX(25,25),            18030111
     4PHIS1(25,25),PHIS2(25,25),PHIS3(25,25 ),PHISEX(25,25),           18030113
     5DELR(25),DELZ(25),R(25),JCL(25),ELR(25),IRO(25),                 18030115
     6ELZ(25),HOL(12),NCC(10)                                          18039901
      COMMON A1,A2,A3,A4,A5,A6,B1,B2,B3,B4,B5,B6,VERGL,VERGF,HOL,NCC,  18039903
     1A7,PHIF1,PHIF2,PHIF3,PHIFEX,PHIS1,PHIS2,PHIS3,                   18030203
     2PHISEX,DELR,DELZ,R,IMAX,JMAX,NORI,NORJ,NREG,NDELR,NDELZ,         18030205
     3MK,LAD,ITOP,IRIT,IBOT,PHIT1,PHIT2,PHIR1,PHIR2,PHIB1,PHIB2,       18030207
     4EPI,BETA,JCL,ELR,IRO,ELZ,IRO1,IRO2,JCL1,JCL2,D1,D2,SIG1,         18030209
     5SIG2,SFNU1,SFNU2,PROB,PHIK1,PHIK2,IT,IR,IB,ITC,IBC,LIM1,LIM2,    18030211
     6LIMI1,LIMI2,LIMJ1,LIMJ2,TEMP1,TEMP2,TEMP3,TEMP4,TEMP5,           18030213
     7TEMP6,TEMP7,TEMP8,IEND,NIT,XLAMDA,NCELL,BETAB1,SUMN1,            18030215
     8SUMN2,ILO,JLO,IHI,JHI,VERG,PHINOR,KEXT1,KEXT2,BETAB2,            18030217
     9XMULT,ABF,ABS,STL,SBL,SRL,PRODF,PRODS,FTL,FBL,FRL                18030219
      EQUIVALENCE (A1(1),B1(1),PHIF2(1)),(A2(1),B2(1),PHIF3(1)),       18030301
     1(A3(1),B3(1),PHIFEX(1)),(A4(1),B4(1),PHIS2(1)),                  18030303
     2(A5(1),B5(1),PHIS3(1)),(A6(1),B6(1),PHISEX(1)),                  18030305
     3(PHIF1(1),DELR(1)), (PHIF1(26),DELZ(1)),(PHIF1(51),R(1)),        18030307
     4(PHIF1(76),JCL(1)),(PHIF1(101),IRO(1)),(PHIF1(126),ELR(1)),      18030309
     5(PHIF1(151),ELZ(1))                                              18039905
 3000 PHINOR = PHIS1(NORI,NORJ)                                        18030401
 3014 READ TAPE 5,((PHIF2(I,J),I = 1,IMAX),J = 1,JMAX)                 18030403
      READ TAPE 5,((PHIS2(I,J),I = 1,IMAX),J = 1,JMAX)                 18030405
      REWIND 5                                                         18030407
      XRMAX = 0.0                                                      18030409
      XRMIN = 10000.0                                                  18030411
 3015 DO 3020 I = 2,LIM1                                               18030413
      DO 3019 J = 2,LIM2                                               18030415
      XRCAL1 = PHIF1(I,J)/PHIF2(I,J)                                   18030417
      XRCAL2 = PHIS1(I,J)/PHIS2(I,J)                                   18030419
      XRMAX1 = MAX1F(XRCAL1,XRCAL2)                                    18030421
      XRMIN1 = MIN1F(XRCAL1,XRCAL2)                                    18030423
      IF(XRMAX1-XRMAX)3017,3016,3016                                   18030501
 3016 XRMAX = XRMAX1                                                   18030503
 3017 IF(XRMIN1-XRMIN)3018,3018,3019                                   18030505
 3018 XRMIN = XRMIN1                                                   18030507
 3019 CONTINUE                                                         18030509
 3020 CONTINUE                                                         18030511
      XNOOO1 = ABSF(XRMAX-1.0)                                         18039913
      XNOOO2 = ABSF(XRMIN-1.0)                                         18039914
      IF(LAD)80,80,81                                                  18039915
   80 VERGF = MAX1F(XNOOO1,XNOOO2)                                     18039916
      GO TO 82                                                         18039917
   81 VERGF = (XRMAX-XRMIN)/(0.5*(XRMAX+XRMIN))                        18039918
   82 X = 100.0/PHINOR                                                 18039919
      DO 303 I = 2,LIM1                                                18030515
      DO 303 J = 2,LIM2                                                18030517
      PHIF1(I,J) = PHIF1(I,J)*X                                        18030519
  303 PHIS1(I,J) = PHIS1(I,J)*X                                        18030521
      IF(LAD)2950,2950,304                                             18030523
  304 VERGL = 0.0                                                      18030524
```

```
      GO TO 99                                                          18039910
 2950 DO 2952 I = 1,IMAX                                                 18030601
      PHIF1(I,1) = PHIF1(I,2)                                            18030603
      PHIS1(I,1) = PHIS1(I,2)                                            18030605
      IF(IR)2951,2952,2952                                               18030607
 2951 PHIF1(I,JMAX) = PHIF1(I,LIM2)                                      18030609
      PHIS1(I,JMAX) = PHIS1(I,LIM2)                                      18030611
 2952 CONTINUE                                                           18030613
 2960 DO 2964 J = 1,JMAX                                                 18030615
      IF(IT)2961,2962,2962                                               18030617
 2961 PHIF1(1,J) = PHIF1(2,J)                                            18030619
      PHIS1(1,J) = PHIS1(2,J)                                            18030620
 2962 IF(IB)2963,2964,2964                                               18030621
 2963 PHIF1(IMAX,J) = PHIF1(LIM1,J)                                      18030623
      PHIS1(IMAX,J) = PHIS1(LIM1,J)                                      18030624
 2964 CONTINUE                                                           18030625
 3004 DO 3005 M = 1,3                                                    18030701
      READ DRUM 1,0000,A1                                                18030703
      READ DRUM 1,0680,A2                                                18030705
      READ DRUM 1,1370,A3                                                18030707
      READ DRUM 2,0000,A4                                                18030709
      READ DRUM 2,0680,A5                                                18030711
      READ DRUM 2,1370,A6                                                18030713
      CALL SUBOUT(SUMN1,NCELL,3750)                                      18030715
      IF(SENSE LIGHT 1)3005,3006                                         18030717
 3005 CONTINUE                                                           18030719
      PAUSE 11111                                                        18030721
 3006 XLMAX = 0.0                                                        18030801
      XLMIN = 1000                                                       18030803
 3007 DO 3013 I = 2,LIM1                                                 18030806
      DO 3012 J = 2,LIM2                                                 18030807
      DEN = PHIF1(I,J)*A6(I,J)+PHIS1(I,J)*A5(I,J)                        18030809
      IF(DEN)3008,3012,3008                                              18030811
 3008 XLC = (PHIF1(I,J)*(A1(I,J)+A2(I,J)+A3(I,J)+A4(I,J)+A7(I,J))        18030813
     1-(PHIF1(I-1,J)*A1(I,J)+PHIF1(I+1,J)*A2(I,J)+PHIF1(I,J+1)*          18030815
     2A3(I,J)+PHIF1(I,J-1)*A4(I,J)))/DEN                                 18030817
      IF(XLC-XLMAX)3010,3009,3009                                        18030819
 3009 XLMAX = XLC                                                        18030821
 3010 IF(XLC-XLMIN)3011,3011,3012                                        18030901
 3011 XLMIN = XLC                                                        18030903
 3012 CONTINUE                                                           18030905
 3013 CONTINUE                                                           18030907
      VERGL = (XLMAX-XLMIN)/XLAMDA                                       18030909
   99 IF(LAD)100,100,90                                                  18039921
   90 VERG = VERGF                                                       18039922
      GO TO 102                                                          18039923
  100 IF(IHI)3022,3022,101                                               18039913
  101 VERG = VERGL                                                       18039915
      GO TO 102                                                          18039917
 3022 VERG = MAX1F(VERGL,VERGF)                                          18039919
  102 IF(VERG-EPI)3047,3047,3021                                         18039921
 3021 IF(SENSE SWITCH 6)3047,1920                                        18030915
 1920 IF(SENSE SWITCH 3)3025,1950                                        18039925
 3025 READ TAPE 5,((PHIF2(I,J),I = 1,IMAX),J = 1,JMAX)                   18031001
      READ TAPE 5,((PHIS2(I,J),I = 1,IMAX),J = 1,JMAX)                   18031003
      READ TAPE 6,((PHIF3(I,J),I = 1,IMAX),J = 1,JMAX)                   18031005
```

```
      READ TAPE 6,((PHIS3(I,J),I = 1,IMAX),J = 1,JMAX)                  18031007
      REWIND 5                                                          18031008
      REWIND 6                                                          18031009
      KEXT1 = 0                                                         18031010
      KEXT2 = 0                                                         18031011
 3026 DO 3041 I = 2,LIM1                                                18031013
      DO 3040 J = 2,LIM2                                                18031015
      IF(I-NORI)3028,3027,3028                                          18031017
 3027 IF(J-NORJ)3028,3032,3028                                          18031019
 3028 XXDN = 2.0*PHIS2(I,J)-PHIS3(I,J)-PHIS1(I,J)                       18031101
      XXTN = ABSF(PHIS1(I,J)-PHIS2(I,J))-                               18031103
     1ABSF(PHIS2(I,J)-PHIS3(I,J))                                       18031104
      XXEN = 2.0*PHIS1(I,J)                                             18031105
      XXFN = 0.5*PHIS1(I,J)                                             18031106
      IF(XXDN)3029,3032,3029                                            18031107
 3029 IF(XXTN)3030,3030,3032                                            18031109
 3030 PHISEX(I,J) = PHIS1(I,J)+(PHIS1(I,J)-PHIS2(I,J))**2/XXDN          18031111
      IF(PHISEX(I,J)-XXEN)3031,3031,3032                                18031113
 3031 IF(PHISEX(I,J)-XXFN)3032,3033,3033                                18031115
 3032 PHISEX(I,J) = PHIS1(I,J)                                          18031117
      GO TO 3034                                                        18031119
 3033 KEXT2 = KEXT2+1                                                   18031121
 3034 XXDN = 2.0*PHIF2(I,J)-PHIF3(I,J)-PHIF1(I,J)                       18031201
      XXTN = ABSF(PHIF1(I,J)-PHIF2(I,J))-                               18031202
     1ABSF(PHIF2(I,J)-PHIF3(I,J))                                       18031203
      XXEN = 2.0*PHIF1(I,J)                                             18031204
      XXFN = 0.5*PHIF1(I,J)                                             18031205
      IF(XXDN)3035,3038,3035                                            18031207
 3035 IF(XXTN)3036,3036,3038                                            18031209
 3036 PHIFEX(I,J) = PHIF1(I,J)+(PHIF1(I,J)-PHIF2(I,J))**2/XXDN          18031211
      IF(PHIFEX(I,J)-XXEN)3037,3037,3038                                18031213
 3037 IF(PHIFEX(I,J)-XXFN)3038,3039,3039                                18031215
 3038 PHIFEX(I,J) = PHIF1(I,J)                                          18031217
      GO TO 3040                                                        18031219
 3039 KEXT1 = KEXT1+1                                                   18031221
 3040 CONTINUE                                                          18031301
 3041 CONTINUE                                                          18031303
 3042 DO 3043 I = 2,LIM1                                                18039901
      DO 3043 J = 2,LIM2                                                18039903
      PHIF1(I,J) = PHIFEX(I,J)                                          18031309
 3043 PHIS1(I,J) = PHISEX(I,J)                                          18031311
      GO TO 1950                                                        18039909
 3047 SENSE LIGHT 2                                                     18031401
 1950 DO 1952 I = 1,IMAX                                                18039901
      PHIF1(I,1) = PHIF1(I,2)                                           18039903
      PHIS1(I,1) = PHIS1(I,2)                                           18039905
      IF(IR)1951,1952,1952                                              18039907
 1951 PHIF1(I,JMAX) = PHIF1(I,LIM2)                                     18039909
      PHIS1(I,JMAX) = PHIS1(I,LIM2)                                     18039910
 1952 CONTINUE                                                          18039911
 1960 DO 1964 J = 1,JMAX                                                18039913
      IF(IT)1961,1962,1962                                              18039914
 1961 PHIF1(1,J) = PHIF1(2,J)                                           18039916
      PHIS1(1,J) = PHIS1(2,J)                                           18039917
 1962 IF(IB)1963,1964,1964                                              18039919
 1963 PHIF1(IMAX,J) = PHIF1(LIM1,J)                                     18039921
```

```
      PHIS1(IMAX,J) = PHIS1(LIM1,J)                                     18039922
 1964 CONTINUE                                                          18039924
 3048 RETURN                                                            18031403
      END(0,1,0,0,1)                                                    18031405
```

```
CMONT SUB      EQUIPOISE MONTOR SUB - 4000                                18030101
      SUBROUTINE MONTOR                                                   18030102
      DIMENSION A1(25,25),A2(25,25),A3(25,25),A4(25,25),                  18030105
     1A5(25,25),A6(25,25),A7(25,25),B1(25,25),B2(25,25),                  18030107
     2B3(25,25),B4(25,25),B5(25,25),B6(25,25),                            18030109
     3PHIF1(25,25),PHIF2(25,25),PHIF3(25,25),PHIFEX(25,25),               18030111
     4PHIS1(25,25),PHIS2(25,25),PHIS3(25,25 ),PHISEX(25,25),              18030113
     5DELR(25),DELZ(25),R(25),JCL(25),ELR(25),IRO(25),                    18030115
     6ELZ(25),HOL(12),NCC(10)                                             18039901
      COMMON A1,A2,A3,A4,A5,A6,B1,B2,B3,B4,B5,B6,VERGL,VERGF,HOL,NCC,     18039903
     1A7,PHIF1,PHIF2,PHIF3,PHIFEX,PHIS1,PHIS2,PHIS3,                      18030203
     2PHISEX,DELR,DELZ,R,IMAX,JMAX,NORI,NORJ,NREG,NDELR,NDELZ,            18030205
     3MK,LAD,ITOP,IRIT,IBOT,PHIT1,PHIT2,PHIR1,PHIR2,PHIB1,PHIB2,          18030207
     4EPI,BETA,JCL,ELR,IRO,ELZ,IRO1,IRO2,JCL1,JCL2,D1,D2,SIG1,            18030209
     5SIG2,SFNU1,SFNU2,PROB,PHIK1,PHIK2,IT,IR,IB,ITC,IBC,LIM1,LIM2,       18030211
     6LIMI1,LIMI2,LIMJ1,LIMJ2,TEMP1,TEMP2,TEMP3,TEMP4,TEMP5,              18030213
     7TEMP6,TEMP7,TEMP8,IEND,NIT,XLAMDA,NCELL,BETAB1,SUMN1,               18030215
     8SUMN2,ILO,JLO,IHI,JHI,VERG,PHINOR,KEXT1,KEXT2,BETAB2,               18030217
     9XMULT,ABF,ABS,STL,SBL,SRL,PRODF,PRODS,FTL,FBL,FRL                   18030219
      EQUIVALENCE (A1(1),B1(1),PHIF2(1)),(A2(1),B2(1),PHIF3(1)),          18030301
     1(A3(1),B3(1),PHIFEX(1)),(A4(1),B4(1),PHIS2(1)),                     18030303
     2(A5(1),B5(1),PHIS3(1)),(A6(1),B6(1),PHISEX(1)),                     18030305
     3(PHIF1(1),DELR(1)), (PHIF1(26),DELZ(1)),(PHIF1(51),R(1)),           18030307
     4(PHIF1(76),JCL(1)),(PHIF1(101),IRO(1)),(PHIF1(126),ELR(1)),         18030309
     5(PHIF1(151),ELZ(1))                                                 18039905
 4000 PRINT 4001,NIT,VERGL,VERGF,XLAMDA                                   18039901
 4001 FORMAT(14H0ITERATION NO.I4,16H  CONVR(NUCRIT)=1PE10.3,              18030403
     114H  CONVR(FLUX)=E10.3,14H  NU CRITICAL=E10.3//////)                18039910
 4009 RETURN                                                              18030513
      END(0,1,0,0,1)                                                      18030515
```

```
CCON1 SUB      EQUIPOISE CONST1 SUB - 300                                18030101
      SUBROUTINE CONST1                                                  18030102
      DIMENSION A1(25,25),A2(25,25),A3(25,25),A4(25,25),                 18030105
     1A5(25,25),A6(25,25),A7(25,25),B1(25,25),B2(25,25),                 18030107
     2B3(25,25),B4(25,25),B5(25,25),B6(25,25),                           18030109
     3PHIF1(25,25),PHIF2(25,25),PHIF3(25,25),PHIFEX(25,25),              18030111
     4PHIS1(25,25),PHIS2(25,25),PHIS3(25,25 ),PHISEX(25,25),             18030113
     5DELR(25),DELZ(25),R(25),JCL(25),ELR(25),IRO(25),                   18030115
     6ELZ(25),HOL(12),NCC(10)                                            18039901
      COMMON A1,A2,A3,A4,A5,A6,B1,B2,B3,B4,B5,B6,VERGL,VERGF,HOL,NCC,    18039903
     1A7,PHIF1,PHIF2,PHIF3,PHIFEX,PHIS1,PHIS2,PHIS3,                     18030203
     2PHISEX,DELR,DELZ,R,IMAX,JMAX,NORI,NORJ,NREG,NDELR,NDELZ,           18030205
     3MK,LAD,ITOP,IRIT,IBOT,PHIT1,PHIT2,PHIR1,PHIR2,PHIB1,PHIB2,         18030207
     4EPI,BETA,JCL,ELR,IRO,ELZ,IRO1,IRO2,JCL1,JCL2,D1,D2,SIG1,           18030209
     5SIG2,SFNU1,SFNU2,PROB,PHIK1,PHIK2,IT,IR,IB,ITC,IBC,LIM1,LIM2,      18030211
     6LIMI1,LIMI2,LIMJ1,LIMJ2,TEMP1,TEMP2,TEMP3,TEMP4,TEMP5,             18030213
     7TEMP6,TEMP7,TEMP8,IEND,NIT,XLAMDA,NCELL,BETAB1,SUMN1,              18030215
     8SUMN2,ILO,JLO,IHI,JHI,VERG,PHINOR,KEXT1,KEXT2,BETAB2,              18030217
     9XMULT,ABF,ABS,STL,SBL,SRL,PRODF,PRODS,FTL,FBL,FRL                  18030219
      EQUIVALENCE (A1(1),B1(1),PHIF2(1)),(A2(1),B2(1),PHIF3(1)),         18030301
     1(A3(1),B3(1),PHIFEX(1)),(A4(1),B4(1),PHIS2(1)),                    18030303
     2(A5(1),B5(1),PHIS3(1)),(A6(1),B6(1),PHISEX(1)),                    18030305
     3(PHIF1(1),DELR(1)), (PHIF1(26),DELZ(1)),(PHIF1(51),R(1)),          18030307
     4(PHIF1(76),JCL(1)),(PHIF1(101),IRO(1)),(PHIF1(126),ELR(1)),        18030309
     5(PHIF1(151),ELZ(1))                                                18039905
  300 IF(ITOP)301,301,304                                                18030401
      FREQUENCY 300(0,10,1)                                              18030403
  301 IF(PHIT2)302,302,303                                               18039901
      FREQUENCY 301(0,10,1)                                              18030407
  302 IT = 0                                                             18030409
      GO TO 305                                                          18030411
  303 IT = 1                                                             18030413
      GO TO 305                                                          18030415
  304 IT = -1                                                            18030417
  305 IF(IRIT)306,306,309                                                18030501
      FREQUENCY 305(0,10,1)                                              18030503
  306 IF(PHIR2)307,307,308                                               18039903
      FREQUENCY 306(0,10,1)                                              18030507
  307 IR = 0                                                             18030509
      GO TO 310                                                          18030511
  308 IR = 1                                                             18030513
      GO TO 310                                                          18030515
  309 IR = -1                                                            18030517
  310 IF(IBOT)311,311,314                                                18030601
      FREQUENCY 310(0,1,1)                                               18030603
  311 IF(PHIB2)312,312,313                                               18039905
      FREQUENCY 311(0,10,1)                                              18030607
  312 IB = 0                                                             18030609
      GO TO 315                                                          18030611
  313 IB = 1                                                             18030613
      GO TO 315                                                          18030615
  314 IB = -1                                                            18030617
  315 IF(IRIT)317,317,316                                                18030701
      FREQUENCY 315(0,10,1)                                              18030703
  316 ITC = +1                                                           18030705
      IBC = +1                                                           18030707
```

```
      GO TO 329                                                         18030709
  317 IF(ITOP)319,319,318                                               18030711
      FREQUENCY 317(0,10,1)                                             18030713
  318 ITC = -1                                                          18030715
      GO TO 320                                                         18030717
  319 ITC = 0                                                           18030719
  320 IF(IBOT)322,322,321                                               18030801
      FREQUENCY 320(0,1,1)                                              18030803
  321 IBC = -1                                                          18030805
      GO TO 329                                                         18030807
  322 IBC = 0                                                           18030809
  329 DO 330 L = 1,NDELR                                                18030907
      JDX1 = JCL(L)                                                     18030909
      JDX2 = JCL(L+1)-1                                                 18030911
      DO 330 M = JDX1,JDX2                                              18030913
  330 DELR(M) = ELR(L)                                                  18030915
  331 DO 333 L = 1,NDELZ                                                18031003
      JDX1 = IRO(L)                                                     18031005
      JDX2 = IRO(L+1)-1                                                 18031007
  332 DO 333 M = JDX1,JDX2                                              18031009
  333 DELZ(M) = ELZ(L)                                                  18031011
  341 R(2) = DELR(1)/2.0                                                18039901
      DO 342 J = 3,JMAX                                                 18031111
  342 R(J) = R(J-1)+DELR(J-1)                                           18031113
      DO 343 I = 1,IMAX                                                 18031115
      DO 343 J = 1,JMAX                                                 18031117
      A1(I,J) = 0.0                                                     18031119
      A2(I,J) = 0.0                                                     18031120
      A3(I,J) = 0.0                                                     18031121
      A4(I,J) = 0.0                                                     18031122
      A5(I,J) = 0.0                                                     18031123
      A6(I,J) = 0.0                                                     18031124
  343 A7(I,J) = 0.0                                                     18031125
      LIM1 = IMAX-1                                                     18031201
      LIM2 = JMAX-1                                                     18031203
  344 DO 351 L = 1,NREG                                                 18031205
      READ TAPE 2,IRO1,IRO2,JCL1,JCL2,D1,D2,SIG1,                       18031207
     1SIG2,SFNU1,SFNU2,PROB,PHIK1,PHIK2                                 18031209
  345 IF(IRO2-IRO1-1)350,350,346                                        18031211
      FREQUENCY 345(0,1,10)                                             18031213
  346 IF(JCL2-JCL1-1)350,350,347                                        18031215
      FREQUENCY 346(0,1,10)                                             18031217
  347 LIMI1 = IRO1+1                                                    18031219
      LIMI2 = IRO2-1                                                    18031221
      LIMJ1 = JCL1+1                                                    18031223
      LIMJ2 = JCL2-1                                                    18031225
  348 DO 349 I = LIMI1,LIMI2                                            18031301
      DO 349 J = LIMJ1,LIMJ2                                            18031303
      TEMP1 = 2.0*R(J)                                                  18031305
      TEMP2 = TEMP1+DELR(J)/2.0                                         18031307
      TEMP3 = TEMP1-DELR(J-1)/2.0                                       18031309
      TEMP4 = TEMP2*DELR(J)*DELZ(I-1)/4.0                               18031311
      TEMP5 = TEMP3*DELR(J-1)*DELZ(I-1)/4.0                             18031313
      TEMP6 = TEMP3*DELR(J-1)*DELZ(I)/4.0                               18031315
      TEMP7 = TEMP2*DELR(J)*DELZ(I)/4.0                                 18031317
      TEMP9 = R(J)+DELR(J)/2.0                                          18039903
```

```
      TEMP10 = R(J)-DELR(J-1)/2.0                                       18039905
      A1(I,J) = D1*(TEMP2*DELR(J)/(2.0*DELZ(I-1))                       18031319
     1+TEMP3*DELR(J-1)/(2.0*DELZ(I-1)))                                 18031321
      A2(I,J) = D1*(TEMP3*DELR(J-1)/(2.0*DELZ(I))                       18031323
     1+TEMP2*DELR(J)/(2.0*DELZ(I)))                                     18031325
      A3(I,J) = D1*(TEMP9*DELZ(I-1)/DELR(J)                             18039907
     1+TEMP9*DELZ(I)/DELR(J))                                           18039909
      A4(I,J) = D1*(TEMP10*DELZ(I-1)/DELR(J-1)                          18039911
     1+TEMP10*DELZ(I)/DELR(J-1))                                        18039913
      TEMP8 = TEMP4+TEMP5+TEMP6+TEMP7                                   18031409
      A5(I,J) = SFNU2*TEMP8                                             18031411
      A6(I,J) = SFNU1*TEMP8                                             18031413
  349 A7(I,J) = SIG1*TEMP8                                              18031415
  350 CONTINUE                                                          18031417
  351 CONTINUE                                                          18031419
      REWIND 2                                                          18031421
  352 RETURN                                                            18031423
      END(0,1,0,0,1)                                                    18031425
```

```
CCON2 SUB      EQUIPOISE CONST2 SUB - 400                                18030101
      SUBROUTINE CONST2                                                  18030102
      DIMENSION A1(25,25),A2(25,25),A3(25,25),A4(25,25),                 18030105
     1A5(25,25),A6(25,25),A7(25,25),B1(25,25),B2(25,25),                 18030107
     2B3(25,25),B4(25,25),B5(25,25),B6(25,25),                           18030109
     3PHIF1(25,25),PHIF2(25,25),PHIF3(25,25),PHIFEX(25,25),              18030111
     4PHIS1(25,25),PHIS2(25,25),PHIS3(25,25 ),PHISEX(25,25),             18030113
     5DELR(25),DELZ(25),R(25),JCL(25),ELR(25),IRO(25),                   18030115
     6ELZ(25),HOL(12),NCC(10)                                            18039901
      COMMON A1,A2,A3,A4,A5,A6,B1,B2,B3,B4,B5,B6,VERGL,VERGF,HOL,NCC,    18039903
     1A7,PHIF1,PHIF2,PHIF3,PHIFEX,PHIS1,PHIS2,PHIS3,                     18030203
     2PHISEX,DELR,DELZ,R,IMAX,JMAX,NORI,NORJ,NREG,NDELR,NDELZ,           18030205
     3MK,LAD,ITOP,IRIT,IBOT,PHIT1,PHIT2,PHIR1,PHIR2,PHIB1,PHIB2,         18030207
     4EPI,BETA,JCL,ELR,IRO,ELZ,IRO1,IRO2,JCL1,JCL2,D1,D2,SIG1,           18030209
     5SIG2,SFNU1,SFNU2,PROB,PHIK1,PHIK2,IT,IR,IB,ITC,IBC,LIM1,LIM2,      18030211
     6LIMI1,LIMI2,LIMJ1,LIMJ2,TEMP1,TEMP2,TEMP3,TEMP4,TEMP5,             18030213
     7TEMP6,TEMP7,TEMP8,IEND,NIT,XLAMDA,NCELL,BETAB1,SUMN1,              18030215
     8SUMN2,ILO,JLO,IHI,JHI,VERG,PHINOR,KEXT1,KEXT2,BETAB2,              18030217
     9XMULT,ABF,ABS,STL,SBL,SRL,PRODF,PRODS,FTL,FBL,FRL                  18030219
      EQUIVALENCE (A1(1),B1(1),PHIF2(1)),(A2(1),B2(1),PHIF3(1)),         18030301
     1(A3(1),B3(1),PHIFEX(1)),(A4(1),B4(1),PHIS2(1)),                    18030303
     2(A5(1),B5(1),PHIS3(1)),(A6(1),B6(1),PHISEX(1)),                    18030305
     3(PHIF1(1),DELR(1)), (PHIF1(26),DELZ(1)),(PHIF1(51),R(1)),          18030307
     4(PHIF1(76),JCL(1)),(PHIF1(101),IRO(1)),(PHIF1(126),ELR(1)),        18030309
     5(PHIF1(151),ELZ(1))                                                18039905
  400 DO 428 L = 1,NREG                                                  18030401
      READ TAPE 2,IRO1,IRO2,JCL1,JCL2,D1,D2,                             18030403
     1SIG1,SIG2,SFNU1,SFNU2,PROB,PHIK1,PHIK2                             18030405
      LIMI1 = IRO1+1                                                     18030407
      LIMI2 = IRO2-1                                                     18030409
      LIMJ1 = JCL1+1                                                     18030411
      LIMJ2 = JCL2-1                                                     18030413
  401 IF(IRO1-1)402,402,490                                              18030414
  402 IF(ITOP)490,490,411                                                18030415
  490 IF(LIMJ2-LIMJ1)405,403,403                                         18030416
      FREQUENCY 401(0,1,2)                                               18030417
      FREQUENCY 402(0,10,1)                                              18030418
  403 DO 404 J = LIMJ1,LIMJ2                                             18030419
      TEMP1 = 2.0*R(J)                                                   18030421
      TEMP2 = TEMP1+DELR(J)/2.0                                          18030423
      TEMP3 = TEMP1-DELR(J-1)/2.0                                        18030425
      TEMP6 = TEMP3*DELR(J-1)*DELZ(IRO1)/4.0                             18030501
      TEMP7 = TEMP2*DELR(J)*DELZ(IRO1)/4.0                               18030503
      TEMP8 = TEMP6+TEMP7                                                18030504
      TEMP9 = R(J)+DELR(J)/2.0                                           18039901
      TEMP10 = R(J)-DELR(J-1)/2.0                                        18039903
      A2(IRO1,J) = D1*(TEMP3*DELR(J-1)/(2.0*DELZ(IRO1))                  18030505
     1+TEMP2*DELR(J)/(2.0*DELZ(IRO1)))                                   18030507
      A3(IRO1,J) = A3(IRO1,J)+D1*TEMP9*DELZ(IRO1)/DELR(J)                18039905
      A4(IRO1,J) = A4(IRO1,J)+D1*TEMP10*DELZ(IRO1)/DELR(J-1)             18039907
      A5(IRO1,J) = A5(IRO1,J)+SFNU2*TEMP8                                18030513
      A6(IRO1,J) = A6(IRO1,J)+SFNU1*TEMP8                                18030515
  404 A7(IRO1,J) = A7(IRO1,J)+SIG1*TEMP8                                 18030517
  405 IF(JCL1-1)408,408,406                                              18030519
      FREQUENCY 405(0,1,2)                                               18030521
  406 TEMP2 = 2.0*R(JCL1)+DELR(JCL1)/2.0                                 18030601
```

```
      TEMP9 = R(JCL1)+DELR(JCL1)/2.0                                    18039909
      TEMP7 = TEMP2*DELR(JCL1)*DELZ(IRO1)/4.0                           18030603
      A2(IRO1,JCL1) = A2(IRO1,JCL1)+D1*TEMP2*DELR(JCL1)/(2.0*DELZ(IRO1))18030605
      A3(IRO1,JCL1) = A3(IRO1,JCL1)+D1*TEMP9*DELZ(IRO1)/DELR(JCL1)      18039911
  407 A5(IRO1,JCL1) = SFNU2*TEMP7+A5(IRO1,JCL1)                         18030609
      A6(IRO1,JCL1) = A6(IRO1,JCL1)+SFNU1*TEMP7                         18030611
      A7(IRO1,JCL1) = A7(IRO1,JCL1)+SIG1*TEMP7                          18030613
  408 IF(JMAX-JCL2)409,409,410                                          18030615
      FREQUENCY 408(0,1,5)                                              18030617
  409 IF(IRIT)410,410,411                                               18030619
      FREQUENCY 409(0,10,1)                                             18030621
  410 TEMP3 = 2.0*R(JCL2)-DELR(JCL2-1)/2.0                              18030701
      TEMP10 = R(JCL2)-DELR(JCL2-1)/2.0                                 18039913
      TEMP6 = TEMP3*DELR(JCL2-1)*DELZ(IRO1)/4.0                         18030703
      A2(IRO1,JCL2) = A2(IRO1,JCL2)+D1*TEMP3*                           18030705
     1DELR(JCL2-1)/(2.0*DELZ(IRO1))                                     18030707
      A4(IRO1,JCL2) = A4(IRO1,JCL2)+D1*TEMP10*                          18039915
     1DELZ(IRO1)/DELR(JCL2-1)                                           18030711
      A5(IRO1,JCL2) = A5(IRO1,JCL2)+SFNU2*TEMP6                         18030713
      A6(IRO1,JCL2) = A6(IRO1,JCL2)+SFNU1*TEMP6                         18030715
      A7(IRO1,JCL2) = A7(IRO1,JCL2)+SIG1*TEMP6                          18030717
  411 IF(IMAX-IRO2)412,412,491                                          18030719
      FREQUENCY 411(0,1,2)                                              18030721
  412 IF(IBOT)491,491,421                                               18030723
  491 IF(LIMJ2-LIMJ1)415,413,413                                        18030724
      FREQUENCY 412(0,1,1)                                              18030725
  413 DO 414 J = LIMJ1,LIMJ2                                            18030801
      TEMP1 = 2.0*R(J)                                                  18030803
      TEMP2 = TEMP1+DELR(J)/2.0                                         18030805
      TEMP3 = TEMP1-DELR(J-1)/2.0                                       18030807
      TEMP4 = TEMP2*DELR(J)*DELZ(IRO2-1)/4.0                            18030809
      TEMP5 = TEMP3*DELR(J-1)*DELZ(IRO2-1)/4.0                          18030811
      TEMP9 = R(J)+DELR(J)/2.0                                          18039919
      TEMP10 = R(J)-DELR(J-1)/2.0                                       18039921
      TEMP8 = TEMP4+TEMP5                                               18030813
      A1(IRO2,J) = D1*(TEMP2*DELR(J)/(2.0*DELZ(IRO2-1))+                18030815
     1TEMP3*DELR(J-1)/(2.0*DELZ(IRO2-1)))                               18030817
      A3(IRO2,J) = A3(IRO2,J)+D1*TEMP9*DELZ(IRO2-1)/DELR(J)             18039923
      A4(IRO2,J)=A4(IRO2,J)+D1*TEMP10*DELZ(IRO2-1)/DELR(J-1)
      A5(IRO2,J) = A5(IRO2,J)+SFNU2*TEMP8                               18030823
      A6(IRO2,J) = A6(IRO2,J)+SFNU1*TEMP8                               18030824
  414 A7(IRO2,J) = A7(IRO2,J)+SIG1*TEMP8                                18030825
  415 IF(JCL1-1)418,418,416                                             18030901
      FREQUENCY 415(0,1,2)                                              18030903
  416 TEMP2 = 2.0*R(JCL1)+DELR(JCL1)/2.0                                18030905
      TEMP9 = R(JCL1)+DELR(JCL1)/2.0                                    18039901
      TEMP4 = TEMP2*DELR(JCL1)*DELZ(IRO2-1)/4.0                         18030907
      A1(IRO2,JCL1) = A1(IRO2,JCL1)+D1*TEMP2*                           18030909
     1DELR(JCL1)/(2.0*DELZ(IRO2-1))                                     18030911
      A3(IRO2,JCL1) = A3(IRO2,JCL1)+D1*TEMP9*                           18039903
     1DELZ(IRO2-1)/DELR(JCL1)                                           18030915
  417 A5(IRO2,JCL1) = A5(IRO2,JCL1)+SFNU2*TEMP4                         18030917
      A6(IRO2,JCL1) = A6(IRO2,JCL1)+SFNU1*TEMP4                         18030919
      A7(IRO2,JCL1) = A7(IRO2,JCL1)+SIG1*TEMP4                          18030921
  418 IF(JMAX-JCL2)419,419,420                                          18030923
      FREQUENCY 418(0,1,5)                                              18030925
```

```
419 IF(IRIT)420,420,421                                                 18031001
    FREQUENCY 419(0,10,1)                                               18031003
420 TEMP3 = 2.0*R(JCL2)-DELR(JCL2-1)/2.0                                18031005
    TEMP10 = R(JCL2)-DELR(JCL2-1)/2.0                                   18039905
    TEMP5 = TEMP3*DELR(JCL2-1)*DELZ(IRO2-1)/4.0                         18031007
    A1(IRO2,JCL2) = A1(IRO2,JCL2)+D1*TEMP3*                             18031009
   1DELR(JCL2-1)/(2.0*DELZ(IRO2-1))                                     18031011
    A4(IRO2,JCL2) = A4(IRO2,JCL2)+D1*TEMP10*                            18039907
   1DELZ(IRO2-1)/DELR(JCL2-1)                                           18031015
    A5(IRO2,JCL2) = A5(IRO2,JCL2)+SFNU2*TEMP5                           18031017
    A6(IRO2,JCL2) = A6(IRO2,JCL2)+SFNU1*TEMP5                           18031019
    A7(IRO2,JCL2) = A7(IRO2,JCL2)+SIG1*TEMP5                            18031021
421 IF(JCL1-1)424,424,422                                               18031101
    FREQUENCY 421(0,1,2)                                                18031103
422 IF(LIMI2-LIMI1)424,492,492                                          18031104
492 DO 423 I = LIMI1,LIMI2                                              18031105
    TEMP2 = 2.0*R(JCL1)+DELR(JCL1)/2.0                                  18031107
    TEMP4 = TEMP2*DELR(JCL1)*DELZ(I-1)/4.0                              18031109
    TEMP7 = TEMP2*DELR(JCL1)*DELZ(I)/4.0                                18031111
    TEMP8 = TEMP4+TEMP7                                                 18031113
    TEMP9 = R(JCL1)+DELR(JCL1)/2.0                                      18039909
    A1(I,JCL1) = A1(I,JCL1)+D1*TEMP2*                                   18031115
   1DELR(JCL1)/(2.0*DELZ(I-1))                                          18031117
    A2(I,JCL1) = A2(I,JCL1)+D1*TEMP2*DELR(JCL1)/(2.0*DELZ(I))           18031119
    A3(I,JCL1) = D1*TEMP9*(DELZ(I-1)/DELR(JCL1)+DELZ(I)/DELR(JCL1))     18039911
    A5(I,JCL1) = A5(I,JCL1)+SFNU2*TEMP8                                 18031123
    A6(I,JCL1) = A6(I,JCL1)+SFNU1*TEMP8                                 18031124
423 A7(I,JCL1) = A7(I,JCL1)+SIG1*TEMP8                                  18031125
424 IF(JMAX-JCL2)425,425,493                                            18031201
    FREQUENCY 424(0,1,2)                                                18031203
425 IF(IRIT)493,493,428                                                 18031205
493 IF(LIMI2-LIMI1)428,426,426                                          18031206
    FREQUENCY 425(0,10,1)                                               18031207
426 DO 427 I = LIMI1,LIMI2                                              18031209
    TEMP3 = 2.0*R(JCL2)-DELR(JCL2-1)/2.0                                18031211
    TEMP5 = TEMP3*DELR(JCL2-1)*DELZ(I-1)/4.0                            18031212
    TEMP6 = TEMP3*DELR(JCL2-1)*DELZ(I)/4.0                              18031213
    TEMP8 = TEMP5+TEMP6                                                 18031214
    TEMP10 = R(JCL2)-DELR(JCL2-1)/2.0                                   18039913
    A1(I,JCL2) = A1(I,JCL2)+D1*TEMP3*                                   18031215
   1DELR(JCL2-1)/(2.0*DELZ(I-1))                                        18031217
    A2(I,JCL2) = A2(I,JCL2)+D1*TEMP3*                                   18031219
   1DELR(JCL2-1)/(2.0*DELZ(I))                                          18031220
    A4(I,JCL2) = D1*TEMP10*(DELZ(I-1)/DELR(JCL2-1)+                     18039915
   1DELZ(I)/DELR(JCL2-1))                                               18031222
    A5(I,JCL2) = A5(I,JCL2)+SFNU2*TEMP8                                 18031223
    A6(I,JCL2) = A6(I,JCL2)+SFNU1*TEMP8                                 18031224
427 A7(I,JCL2) = A7(I,JCL2)+SIG1*TEMP8                                  18031225
428 CONTINUE                                                            18031301
    REWIND 2                                                            18031303
429 RETURN                                                              18031305
    END(0,1,0,0,1)                                                      18031307
```

```
CCON3 SUB     EQUIPOISE CONST3 SUB - 500                                18030101
      SUBROUTINE CONST3                                                 18030102
      DIMENSION A1(25,25),A2(25,25),A3(25,25),A4(25,25),                18030105
     1A5(25,25),A6(25,25),A7(25,25),B1(25,25),B2(25,25),                18030107
     2B3(25,25),B4(25,25),B5(25,25),B6(25,25),                          18030109
     3PHIF1(25,25),PHIF2(25,25),PHIF3(25,25),PHIFEX(25,25),             18030111
     4PHIS1(25,25),PHIS2(25,25),PHIS3(25,25 ),PHISEX(25,25),            18030113
     5DELR(25),DELZ(25),R(25),JCL(25),ELR(25),IRO(25),                  18030115
     6ELZ(25),HOL(12),NCC(10)                                           18039901
      COMMON A1,A2,A3,A4,A5,A6,B1,B2,B3,B4,B5,B6,VERGL,VERGF,HOL,NCC,   18039903
     1A7,PHIF1,PHIF2,PHIF3,PHIFEX,PHIS1,PHIS2,PHIS3,                    18030203
     2PHISEX,DELR,DELZ,R,IMAX,JMAX,NORI,NORJ,NREG,NDELR,NDELZ,          18030205
     3MK,LAD,ITOP,IRIT,IBOT,PHIT1,PHIT2,PHIR1,PHIR2,PHIB1,PHIB2,        18030207
     4EPI,BETA,JCL,ELR,IRO,ELZ,IRO1,IRO2,JCL1,JCL2,D1,D2,SIG1,          18030209
     5SIG2,SFNU1,SFNU2,PROB,PHIK1,PHIK2,IT,IR,IB,ITC,IBC,LIM1,LIM2,     18030211
     6LIMI1,LIMI2,LIMJ1,LIMJ2,TEMP1,TEMP2,TEMP3,TEMP4,TEMP5,            18030213
     7TEMP6,TEMP7,TEMP8,IEND,NIT,XLAMDA,NCELL,BETAB1,SUMN1,             18030215
     8SUMN2,ILO,JLO,IHI,JHI,VERG,PHINOR,KEXT1,KEXT2,BETAB2,             18030217
     9XMULT,ABF,ABS,STL,SBL,SRL,PRODF,PRODS,FTL,FBL,FRL                 18030219
      EQUIVALENCE (A1(1),B1(1),PHIF2(1)),(A2(1),B2(1),PHIF3(1)),        18030301
     1(A3(1),B3(1),PHIFEX(1)),(A4(1),B4(1),PHIS2(1)),                   18030303
     2(A5(1),B5(1),PHIS3(1)),(A6(1),B6(1),PHISEX(1)),                   18030305
     3(PHIF1(1),DELR(1)), (PHIF1(26),DELZ(1)),(PHIF1(51),R(1)),         18030307
     4(PHIF1(76),JCL(1)),(PHIF1(101),IRO(1)),(PHIF1(126),ELR(1)),       18030309
     5(PHIF1(151),ELZ(1))                                               18039905
  500 WRITE TAPE 3,((A7(I,J),I = 1,IMAX),J = 1,JMAX)                    18030405
      WRITE TAPE 3,(R(J),J = 2,JMAX)                                    18030407
      WRITE TAPE 3,(DELR(J),J = 1,LIM2)                                 18030409
      WRITE TAPE 3,(DELZ(I),I = 1,LIM1)                                 18030411
      REWIND 3                                                          18030413
      WRITE TAPE 4,A1
      WRITE TAPE 4,A2
      WRITE TAPE 4,A3
      WRITE TAPE 4,A4
      WRITE TAPE 4,A5
      WRITE TAPE 4,A6
      NCELL = XLOCF(A1(1,1))                                            18030603
      CALL SUBINN(SUMN1,NCELL,3750)                                     18030605
      WRITE DRUM 1,0000,A1                                              18030701
      WRITE DRUM 1,0680,A2                                              18030703
      WRITE DRUM 1,1370,A3                                              18030705
      WRITE DRUM 2,0000,A4                                              18030707
      WRITE DRUM 2,0680,A5                                              18030709
      WRITE DRUM 2,1370,A6                                              18030711
  507 DO 508 I = 1,IMAX                                                 18030801
      DO 508 J = 1,JMAX                                                 18030803
      B1(I,J) = 0.0                                                     18030805
      B2(I,J) = 0.0                                                     18030807
      B3(I,J) = 0.0                                                     18030809
      B4(I,J) = 0.0                                                     18030811
      B5(I,J) = 0.0                                                     18030813
  508 B6(I,J) = 0.0                                                     18030815
  509 DO 516 L = 1,NREG                                                 18030901
      READ TAPE 2,IRO1,IRO2,JCL1,JCL2,D1,D2,SIG1,                       18030903
     1SIG2,SFNU1,SFNU2,PROB,PHIK1,PHIK2                                 18030905
  510 IF(IRO2-IRO1-1)515,515,511                                        18030907
```

```
      FREQUENCY 510(0,1,10)                                             18030909
  511 IF(JCL2-JCL1-1)515,515,512                                        18030911
      FREQUENCY 511(0,1,10)                                             18030913
  512 LIMI1 = IRO1+1                                                    18030915
      LIMI2 = IRO2-1                                                    18030917
      LIMJ1 = JCL1+1                                                    18030919
      LIMJ2 = JCL2-1                                                    18030921
  513 DO 514 I = LIMI1,LIMI2                                            18031001
      DO 514 J = LIMJ1,LIMJ2                                            18031003
      TEMP1 = 2.0*R(J)                                                  18031005
      TEMP2 = TEMP1+DELR(J)/2.0                                         18031007
      TEMP3 = TEMP1-DELR(J-1)/2.0                                       18031009
      TEMP4 = TEMP2*DELR(J)*DELZ(I-1)/4.0                               18031011
      TEMP5 = TEMP3*DELR(J-1)*DELZ(I-1)/4.0                             18031013
      TEMP6 = TEMP3*DELR(J-1)*DELZ(I)/4.0                               18031015
      TEMP7 = TEMP2*DELR(J)*DELZ(I)/4.0                                 18031017
      TEMP9 = R(J)+DELR(J)/2.0                                          18039901
      TEMP10 = R(J)-DELR(J-1)/2.0                                       18039903
      B1(I,J) = D2*(TEMP2*DELR(J)/(2.0*DELZ(I-1))                       18031019
     1+TEMP3*DELR(J-1)/(2.0*DELZ(I-1)))                                 18031021
      B2(I,J) = D2*(TEMP3*DELR(J-1)/(2.0*DELZ(I))                       18031023
     1+TEMP2*DELR(J)/(2.0*DELZ(I)))                                     18031025
      B3(I,J) = D2*(TEMP9*DELZ(I-1)/DELR(J)                             18039905
     1+TEMP9*DELZ(I)/DELR(J))                                           18039907
      B4(I,J) = D2*(TEMP10*DELZ(I-1)/DELR(J-1)                          18039909
     1+TEMP10*DELZ(I)/DELR(J-1))                                        18039911
      TEMP8 = TEMP4+TEMP5+TEMP6+TEMP7                                   18031109
      B5(I,J) = PROB*SIG1*TEMP8                                         18031111
  514 B6(I,J) = SIG2*TEMP8                                              18031113
  515 CONTINUE                                                          18031115
  516 CONTINUE                                                          18031117
      REWIND 2                                                          18031119
  517 RETURN                                                            18031121
      END(0,1,0,0,1)                                                    18031123
```

```
CCON4 SUB      EQUIPOISE CONST4 SUB - 600                                18030101
      SUBROUTINE CONST4                                                  18030102
      DIMENSION A1(25,25),A2(25,25),A3(25,25),A4(25,25),                 18030105
     1A5(25,25),A6(25,25),A7(25,25),B1(25,25),B2(25,25),                 18030107
     2B3(25,25),B4(25,25),B5(25,25),B6(25,25),                           18030109
     3PHIF1(25,25),PHIF2(25,25),PHIF3(25,25),PHIFEX(25,25),              18030111
     4PHIS1(25,25),PHIS2(25,25),PHIS3(25,25 ),PHISEX(25,25),             18030113
     5DELR(25),DELZ(25),R(25),JCL(25),ELR(25),IRO(25),                   18030115
     6ELZ(25),HOL(12),NCC(10)                                            18039901
      COMMON A1,A2,A3,A4,A5,A6,B1,B2,B3,B4,B5,B6,VERGL,VERGF,HOL,NCC,    18039903
     1A7,PHIF1,PHIF2,PHIF3,PHIFEX,PHIS1,PHIS2,PHIS3,                     18030203
     2PHISEX,DELR,DELZ,R,IMAX,JMAX,NORI,NORJ,NREG,NDELR,NDELZ,           18030205
     3MK,LAD,ITOP,IRIT,IBOT,PHIT1,PHIT2,PHIR1,PHIR2,PHIB1,PHIB2,         18030207
     4EPI,BETA,JCL,ELR,IRO,ELZ,IRO1,IRO2,JCL1,JCL2,D1,D2,SIG1,           18030209
     5SIG2,SFNU1,SFNU2,PROB,PHIK1,PHIK2,IT,IR,IB,ITC,IBC,LIM1,LIM2,      18030211
     6LIMI1,LIMI2,LIMJ1,LIMJ2,TEMP1,TEMP2,TEMP3,TEMP4,TEMP5,             18030213
     7TEMP6,TEMP7,TEMP8,IEND,NIT,XLAMDA,NCELL,BETAB1,SUMN1,              18030215
     8SUMN2,ILO,JLO,IHI,JHI,VERG,PHINOR,KEXT1,KEXT2,BETAB2,              18030217
     9XMULT,ABF,ABS,STL,SBL,SRL,PRODF,PRODS,FTL,FBL,FRL                  18030219
      EQUIVALENCE (A1(1),B1(1),PHIF2(1)),(A2(1),B2(1),PHIF3(1)),         18030301
     1(A3(1),B3(1),PHIFEX(1)),(A4(1),B4(1),PHIS2(1)),                    18030303
     2(A5(1),B5(1),PHIS3(1)),(A6(1),B6(1),PHISEX(1)),                    18030305
     3(PHIF1(1),DELR(1)), (PHIF1(26),DELZ(1)),(PHIF1(51),R(1)),          18030307
     4(PHIF1(76),JCL(1)),(PHIF1(101),IRO(1)),(PHIF1(126),ELR(1)),        18030309
     5(PHIF1(151),ELZ(1))                                                18039905
  600 DO 628 L = 1,NREG                                                  18030401
      READ TAPE 2,IRO1,IRO2,JCL1,JCL2,D1,D2,SIG1,                        18030403
     1SIG2,SFNU1,SFNU2,PROB,PHIK1,PHIK2                                  18030405
      LIMI1 = IRO1+1                                                     18030407
      LIMI2 = IRO2-1                                                     18030409
      LIMJ1 = JCL1+1                                                     18030411
      LIMJ2 = JCL2-1                                                     18030413
  601 IF(IRO1-1)602,602,690                                              18030414
  602 IF(ITOP)690,690,611                                                18030415
  690 IF(LIMJ2-LIMJ1)605,603,603                                         18030416
      FREQUENCY 601(0,1,2)                                               18030417
      FREQUENCY 602(0,10,1)                                              18030418
  603 DO 604 J = LIMJ1,LIMJ2                                             18030419
      TEMP1 = 2.0*R(J)                                                   18030421
      TEMP2 = TEMP1+DELR(J)/2.0                                          18030423
      TEMP3 = TEMP1-DELR(J-1)/2.0                                        18030425
      TEMP6 = TEMP3*DELR(J-1)*DELZ(IRO1)/4.0                             18030501
      TEMP7 = TEMP2*DELR(J)*DELZ(IRO1)/4.0                               18030503
      TEMP8 = TEMP6+TEMP7                                                18030505
      TEMP9 = R(J)+DELR(J)/2.0                                           18039901
      TEMP10 = R(J)-DELR(J-1)/2.0                                        18039903
      B2(IRO1,J) = D2*(TEMP3*DELR(J-1)/(2.0*DELZ(IRO1))                  18030507
     1+TEMP2*DELR(J)/(2.0*DELZ(IRO1)))                                   18030509
      B3(IRO1,J) = B3(IRO1,J)+D2*TEMP9*DELZ(IRO1)/DELR(J)                18039905
      B4(IRO1,J) = B4(IRO1,J)+D2*TEMP10*DELZ(IRO1)/DELR(J-1)             18039907
      B5(IRO1,J) = B5(IRO1,J)+PROB*SIG1*TEMP8                            18030515
  604 B6(IRO1,J) = B6(IRO1,J)+SIG2*TEMP8                                 18030517
  605 IF(JCL1-1)608,608,606                                              18030519
      FREQUENCY 605(0,1,2)                                               18030521
  606 TEMP2 = 2.0*R(JCL1)+DELR(JCL1)/2.0                                 18030601
      TEMP7 = TEMP2*DELR(JCL1)*DELZ(IRO1)/4.0                            18030603
```

```
      TEMP9 = R(JCL1)+DELR(JCL1)/2.0                                    18039909
      B2(IRO1,JCL1) = B2(IRO1,JCL1)+D2*TEMP2*                           18030605
     1DELR(JCL1)/(2.0*DELZ(IRO1))                                       18030607
      B3(IRO1,JCL1) = B3(IRO1,JCL1)+D2*TEMP9*DELZ(IRO1)/DELR(JCL1)      18039911
  607 B5(IRO1,JCL1) = B5(IRO1,JCL1)+PROB*SIG1*TEMP7                     18030611
      B6(IRO1,JCL1) = B6(IRO1,JCL1)+SIG2*TEMP7                          18030613
  608 IF(JMAX-JCL2)609,609,610                                          18030615
      FREQUENCY 608(0,1,5)                                              18030617
  609 IF(IRIT)610,610,611                                               18030619
      FREQUENCY 609(0,10,1)                                             18030621
  610 TEMP3 = 2.0*R(JCL2)-DELR(JCL2-1)/2.0                              18030701
      TEMP6 = TEMP3*DELR(JCL2-1)*DELZ(IRO1)/4.0                         18030703
      TEMP10 = R(JCL2)-DELR(JCL2-1)/2.0                                 18039913
      B2(IRO1,JCL2) = B2(IRO1,JCL2)+D2*TEMP3*                           18030705
     1DELR(JCL2-1)/(2.0*DELZ(IRO1))                                     18030707
      B4(IRO1,JCL2) = B4(IRO1,JCL2)+D2*TEMP10*                          18039915
     1DELZ(IRO1)/DELR(JCL2-1)                                           18030711
      B5(IRO1,JCL2) = B5(IRO1,JCL2)+PROB*SIG1*TEMP6                     18030713
      B6(IRO1,JCL2) = B6(IRO1,JCL2)+SIG2*TEMP6                          18030715
  611 IF(IMAX-IRO2)612,612,691                                          18030717
      FREQUENCY 611(0,1,2)                                              18030719
  612 IF(IBOT)691,691,621                                               18030721
  691 IF(LIMJ2-LIMJ1)615,613,613                                        18030723
      FREQUENCY 612(0,1,1)                                              18030725
  613 DO 614 J = LIMJ1,LIMJ2                                            18030801
      TEMP1 = 2.0*R(J)                                                  18030803
      TEMP2 = TEMP1+DELR(J)/2.0                                         18030805
      TEMP3 = TEMP1-DELR(J-1)/2.0                                       18030807
      TEMP4 = TEMP2*DELR(J)*DELZ(IRO2-1)/4.0                            18030809
      TEMP5 = TEMP3*DELR(J-1)*DELZ(IRO2-1)/4.0                          18030811
      TEMP8 = TEMP4+TEMP5                                               18030813
      TEMP9 = R(J)+DELR(J)/2.0                                          18039917
      TEMP10 = R(J)-DELR(J-1)/2.0                                       18039919
      B1(IRO2,J) = D2*(TEMP2*DELR(J)/(2.0*DELZ(IRO2-1))+                18030815
     1TEMP3*DELR(J-1)/(2.0*DELZ(IRO2-1)))                               18030817
      B3(IRO2,J) = B3(IRO2,J)+D2*TEMP9*DELZ(IRO2-1)/DELR(J)             18039921
      B4(IRO2,J) = B4(IRO2,J)+D2*TEMP10*DELZ(IRO2-1)/DELR(J-1)          18039923
      B5(IRO2,J) = B5(IRO2,J)+PROB*SIG1*TEMP8                           18030823
  614 B6(IRO2,J) = B6(IRO2,J)+SIG2*TEMP8                                18030825
  615 IF(JCL1-1)618,618,616                                             18030901
      FREQUENCY 615(0,1,2)                                              18030903
  616 TEMP2 = 2.0*R(JCL1)+DELR(JCL1)/2.0                                18030905
      TEMP4 = TEMP2*DELR(JCL1)*DELZ(IRO2-1)/4.0                         18030907
      TEMP9 = R(JCL1)+DELR(JCL1)/2.0                                    18039901
      B1(IRO2,JCL1) = B1(IRO2,JCL1)+D2*TEMP2*                           18030909
     1DELR(JCL1)/(2.0*DELZ(IRO2-1))                                     18030911
      B3(IRO2,JCL1) = B3(IRO2,JCL1)+D2*TEMP9*                           18039903
     1DELZ(IRO2-1)/DELR(JCL1)                                           18030915
  617 B5(IRO2,JCL1) = B5(IRO2,JCL1)+PROB*SIG1*TEMP4                     18030917
      B6(IRO2,JCL1) = B6(IRO2,JCL1)+SIG2*TEMP4                          18030919
  618 IF(JMAX-JCL2)619,619,620                                          18030921
      FREQUENCY 618(0,1,5)                                              18030923
  619 IF(IRIT)620,620,621                                               18031001
      FREQUENCY 619(0,10,1)                                             18031003
  620 TEMP3 = 2.0*R(JCL2)-DELR(JCL2-1)/2.0                              18031005
      TEMP5 = TEMP3*DELR(JCL2-1)*DELZ(IRO2-1)/4.0                       18031007
```

```
      TEMP10 = R(JCL2)-DELR(JCL2-1)/2.0                                 18039905
      B1(IRO2,JCL2) = B1(IRO2,JCL2)+D2*TEMP3*                           18031009
     1DELR(JCL2-1)/(2.0*DELZ(IRO2-1))                                   18031011
      B4(IRO2,JCL2) = B4(IRO2,JCL2)+D2*TEMP10*                          18039907
     1DELZ(IRO2-1)/DELR(JCL2-1)                                         18031015
      B5(IRO2,JCL2) = B5(IRO2,JCL2)+PROB*SIG1*TEMP5                     18031017
      B6(IRO2,JCL2) = B6(IRO2,JCL2)+SIG2*TEMP5                          18031019
  621 IF(JCL1-1)624,624,622                                             18031101
      FREQUENCY 621(0,1,2)                                              18031103
  622 IF(LIMI2-LIMI1)624,692,692                                        18031105
  692 DO 623 I = LIMI1,LIMI2                                            18031107
      TEMP2 = 2.0*R(JCL1)+DELR(JCL1)/2.0                                18031109
      TEMP4 = TEMP2*DELR(JCL1)*DELZ(I-1)/4.0                            18031111
      TEMP7 = TEMP2*DELR(JCL1)*DELZ(I)/4.0                              18031113
      TEMP8 = TEMP4+TEMP7                                               18031114
      TEMP9 = R(JCL1)+DELR(JCL1)/2.0                                    18039909
      B1(I,JCL1) = B1(I,JCL1)+D2*TEMP2*                                 18031116
     1DELR(JCL1)/(2.0*DELZ(I-1))                                        18031118
      B2(I,JCL1) = B2(I,JCL1)+D2*TEMP2*DELR(JCL1)/(2.0*DELZ(I))         18031120
      B3(I,JCL1) = D2*TEMP9*(DELZ(I-1)/DELR(JCL1)+DELZ(I)/DELR(JCL1))   18039911
      B5(I,JCL1) = B5(I,JCL1)+PROB*SIG1*TEMP8                           18031123
  623 B6(I,JCL1) = B6(I,JCL1)+SIG2*TEMP8                                18031125
  624 IF(JMAX-JCL2)625,625,693                                          18031201
      FREQUENCY 624(0,1,2)                                              18031202
  625 IF(IRIT)693,693,628                                               18031203
  693 IF(LIMI2-LIMI1)628,626,626                                        18031204
      FREQUENCY 625(0,10,1)                                             18031205
  626 DO 627 I = LIMI1,LIMI2                                            18031206
      TEMP3 = 2.0*R(JCL2)-DELR(JCL2-1)/2.0                              18031208
      TEMP5 = TEMP3*DELR(JCL2-1)*DELZ(I-1)/4.0                          18031210
      TEMP6 = TEMP3*DELR(JCL2-1)*DELZ(I)/4.0                            18031212
      TEMP8 = TEMP5+TEMP6                                               18031214
      TEMP10 = R(JCL2)-DELR(JCL2-1)/2.0                                 18039913
      B1(I,JCL2) = B1(I,JCL2)+D2*TEMP3*                                 18031216
     1DELR(JCL2-1)/(2.0*DELZ(I-1))                                      18031218
      B2(I,JCL2) = B2(I,JCL2)+D2*TEMP3*                                 18031220
     1DELR(JCL2-1)/(2.0*DELZ(I))                                        18031221
      B4(I,JCL2) = D2*TEMP10*(DELZ(I-1)/DELR(JCL2-1)+                   18039915
     1DELZ(I)/DELR(JCL2-1))                                             18031223
      B5(I,JCL2) = B5(I,JCL2)+PROB*SIG1*TEMP8                           18031224
  627 B6(I,JCL2) = B6(I,JCL2)+SIG2*TEMP8                                18031225
  628 CONTINUE                                                          18031301
      REWIND 2                                                          18031303
  629 RETURN                                                            18031305
      END(0,1,0,0,1)                                                    18031307
```

```
CCON5 SUB     EQUIPOISE CONST5 SUB - 700                                18030101
      SUBROUTINE CONST5                                                 18030102
      DIMENSION A1(25,25),A2(25,25),A3(25,25),A4(25,25),                18030105
     1A5(25,25),A6(25,25),A7(25,25),B1(25,25),B2(25,25),                18030107
     2B3(25,25),B4(25,25),B5(25,25),B6(25,25),                          18030109
     3PHIF1(25,25),PHIF2(25,25),PHIF3(25,25),PHIFEX(25,25),             18030111
     4PHIS1(25,25),PHIS2(25,25),PHIS3(25,25 ),PHISEX(25,25),            18030113
     5DELR(25),DELZ(25),R(25),JCL(25),ELR(25),IRO(25),                  18030115
     6ELZ(25),HOL(12),NCC(10)                                           18039901
      COMMON A1,A2,A3,A4,A5,A6,B1,B2,B3,B4,B5,B6,VERGL,VERGF,HOL,NCC,   18039903
     1A7,PHIF1,PHIF2,PHIF3,PHIFEX,PHIS1,PHIS2,PHIS3,                    18030203
     2PHISEX,DELR,DELZ,R,IMAX,JMAX,NORI,NORJ,NREG,NDELR,NDELZ,          18030205
     3MK,LAD,ITOP,IRIT,IBOT,PHIT1,PHIT2,PHIR1,PHIR2,PHIB1,PHIB2,        18030207
     4EPI,BETA,JCL,ELR,IRO,ELZ,IRO1,IRO2,JCL1,JCL2,D1,D2,SIG1,          18030209
     5SIG2,SFNU1,SFNU2,PROB,PHIK1,PHIK2,IT,IR,IB,ITC,IBC,LIM1,LIM2,     18030211
     6LIMI1,LIMI2,LIMJ1,LIMJ2,TEMP1,TEMP2,TEMP3,TEMP4,TEMP5,            18030213
     7TEMP6,TEMP7,TEMP8,IEND,NIT,XLAMDA,NCELL,BETAB1,SUMN1,             18030215
     8SUMN2,ILO,JLO,IHI,JHI,VERG,PHINOR,KEXT1,KEXT2,BETAB2,             18030217
     9XMULT,ABF,ABS,STL,SBL,SRL,PRODF,PRODS,FTL,FBL,FRL                 18030219
      EQUIVALENCE (A1(1),B1(1),PHIF2(1)),(A2(1),B2(1),PHIF3(1)),        18030301
     1(A3(1),B3(1),PHIFEX(1)),(A4(1),B4(1),PHIS2(1)),                   18030303
     2(A5(1),B5(1),PHIS3(1)),(A6(1),B6(1),PHISEX(1)),                   18030305
     3(PHIF1(1),DELR(1)), (PHIF1(26),DELZ(1)),(PHIF1(51),R(1)),         18030307
     4(PHIF1(76),JCL(1)),(PHIF1(101),IRO(1)),(PHIF1(126),ELR(1)),       18030309
     5(PHIF1(151),ELZ(1))                                               18039905
      WRITE TAPE 4,B1
      WRITE TAPE 4,B2
      WRITE TAPE 4,B3
      WRITE TAPE 4,B4
      WRITE TAPE 4,B5
      WRITE TAPE 4,B6
      CALL SUBINN(SUMN2,NCELL,3750)                                     18030604
      WRITE DRUM 3,0000,B1                                              18030701
      WRITE DRUM 3,0680,B2                                              18030703
      WRITE DRUM 3,1370,B3                                              18030705
      WRITE DRUM 4,0000,B4                                              18030707
      WRITE DRUM 4,0680,B5                                              18030709
      WRITE DRUM 4,1370,B6                                              18030711
  706 REWIND 4                                                          18030725
      IF(JHI)707,707,800                                                18039901
  707 DO 709 L = 1,NREG                                                 18030801
      READ TAPE 2,IRO1,IRO2,JCL1,JCL2,D1,D2,SIG1,                       18030803
     1SIG2,SFNU1,SFNU2,PROB,PHIK1,PHIK2                                 18030805
      DO 708 I = IRO1,IRO2                                              18030807
      DO 708 J = JCL1,JCL2                                              18030809
      PHIF1(I,J) = PHIK1                                                18030811
  708 PHIS1(I,J) = PHIK2                                                18030813
  709 CONTINUE                                                          18030815
      REWIND 2                                                          18030817
  710 DO 716 J = 2,LIM2                                                 18030819
  711 IF(IT)712,713,714                                                 18030821
      FREQUENCY 711(1,3,2)                                              18030823
  712 PHIF1(1,J) = PHIF1(2,J)                                           18030825
      PHIS1(1,J) = PHIS1(2,J)                                           18030901
      GO TO 715                                                         18030903
  713 PHIF1(1,J) = 0.0                                                  18030905
```

```
      PHIS1(1,J) = 0.0                                                  18030907
      GO TO 715                                                         18030909
  714 PHIF1(1,J) = PHIT1                                                18030911
      PHIS1(1,J) = PHIT2                                                18030913
  715 CONTINUE                                                          18030915
  716 CONTINUE                                                          18030917
  717 DO 723 I = 2,LIM1                                                 18031001
  718 IF(IR)719,720,721                                                 18031003
      FREQUENCY 718(1,3,2)                                              18031004
  719 PHIF1(I,JMAX) = PHIF1(I,LIM2)                                     18031005
      PHIS1(I,JMAX) = PHIS1(I,LIM2)                                     18031007
      GO TO 722                                                         18031009
  720 PHIF1(I,JMAX) = 0.0                                               18031011
      PHIS1(I,JMAX) = 0.0                                               18031013
      GO TO 722                                                         18031015
  721 PHIF1(I,JMAX) = PHIR1                                             18031017
      PHIS1(I,JMAX) = PHIR2                                             18031019
  722 CONTINUE                                                          18031021
  723 CONTINUE                                                          18031023
  724 DO 730 J = 2,LIM2                                                 18031101
  725 IF(IB)726,727,728                                                 18031103
      FREQUENCY 725(3,2,1)                                              18031105
  726 PHIF1(IMAX,J) = PHIF1(LIM1,J)                                     18031107
      PHIS1(IMAX,J) = PHIS1(LIM1,J)                                     18031109
      GO TO 729                                                         18031111
  727 PHIF1(IMAX,J) = 0.0                                               18031113
      PHIS1(IMAX,J) = 0.0                                               18031115
      GO TO 729                                                         18031117
  728 PHIF1(IMAX,J) = PHIB1                                             18031119
      PHIS1(IMAX,J) = PHIB2                                             18031121
  729 CONTINUE                                                          18031123
  730 CONTINUE                                                          18031125
  731 DO 732 I = 1,IMAX                                                 18031201
      PHIF1(I,1) = PHIF1(I,2)                                           18031203
  732 PHIS1(I,1) = PHIS1(I,2)                                           18031205
  733 IF(ITC)734,735,736                                                18031207
      FREQUENCY 733(1,10,1)                                             18031209
  734 PHIF1(1,JMAX) = PHIF1(2,JMAX)                                     18031211
      PHIS1(1,JMAX) = PHIS1(2,JMAX)                                     18031213
      GO TO 737                                                         18031215
  735 PHIF1(1,JMAX) = (PHIF1(1,LIM2)+PHIF1(2,JMAX))/2.0                 18031217
      PHIS1(1,JMAX) = (PHIS1(1,LIM2)+PHIS1(2,JMAX))/2.0                 18031219
      GO TO 737                                                         18031221
  736 PHIF1(1,JMAX) = PHIF1(1,LIM2)                                     18031223
      PHIS1(1,JMAX) = PHIS1(1,LIM2)                                     18031225
  737 IF(IBC)738,739,740                                                18031301
      FREQUENCY 737(3,1,2)                                              18031303
  738 PHIF1(IMAX,JMAX) = PHIF1(LIM1,JMAX)                               18031305
      PHIS1(IMAX,JMAX) = PHIS1(LIM1,JMAX)                               18031307
      GO TO 741                                                         18031309
  739 PHIF1(IMAX,JMAX) = (PHIF1(LIM1,JMAX)+PHIF1(IMAX,LIM2))/2.0        18031311
      PHIS1(IMAX,JMAX) = (PHIS1(LIM1,JMAX)+PHIS1(IMAX,LIM2))/2.0        18031313
      GO TO 741                                                         18031315
  740 PHIF1(IMAX,JMAX) = PHIF1(IMAX,LIM2)                               18031317
      PHIS1(IMAX,JMAX) = PHIS1(IMAX,LIM2)                               18031319
      GO TO 741                                                         18039903
```

```
800 READ TAPE 6,((PHIF1(I,J),I=1,IMAX),J=1,JMAX)                18039905
    READ TAPE 6,((PHIS1(I,J),I=1,IMAX),J=1,JMAX)                18039907
    REWIND 6                                                    18039909
741 RETURN                                                      18031322
    END(0,1,0,0,1)                                              18031323
```

```
COUT2 SUB      EQUIPOISE OUT2 SUB - 900                                  18030101
      SUBROUTINE OUT2                                                    18030102
      DIMENSION A1(25,25),A2(25,25),A3(25,25),A4(25,25),                 18030105
     1A5(25,25),A6(25,25),A7(25,25),B1(25,25),B2(25,25),                 18030107
     2B3(25,25),B4(25,25),B5(25,25),B6(25,25),                           18030109
     3PHIF1(25,25),PHIF2(25,25),PHIF3(25,25),PHIFEX(25,25),              18030111
     4PHIS1(25,25),PHIS2(25,25),PHIS3(25,25 ),PHISEX(25,25),             18030113
     5DELR(25),DELZ(25),R(25),JCL(25),ELR(25),IRO(25),                   18030115
     6ELZ(25),HOL(12),NCC(10)                                            18039901
      COMMON A1,A2,A3,A4,A5,A6,B1,B2,B3,B4,B5,B6,VERGL,VERGF,HOL,NCC,    18039903
     1A7,PHIF1,PHIF2,PHIF3,PHIFEX,PHIS1,PHIS2,PHIS3,                     18030203
     2PHISEX,DELR,DELZ,R,IMAX,JMAX,NORI,NORJ,NREG,NDELR,NDELZ,           18030205
     3MK,LAD,ITOP,IRIT,IBOT,PHIT1,PHIT2,PHIR1,PHIR2,PHIB1,PHIB2,         18030207
     4EPI,BETA,JCL,ELR,IRO,ELZ,IRO1,IRO2,JCL1,JCL2,D1,D2,SIG1,           18030209
     5SIG2,SFNU1,SFNU2,PROB,PHIK1,PHIK2,IT,IR,IB,ITC,IBC,LIM1,LIM2,      18030211
     6LIMI1,LIMI2,LIMJ1,LIMJ2,TEMP1,TEMP2,TEMP3,TEMP4,TEMP5,             18030213
     7TEMP6,TEMP7,TEMP8,IEND,NIT,XLAMDA,NCELL,BETAB1,SUMN1,              18030215
     8SUMN2,ILO,JLO,IHI,JHI,VERG,PHINOR,KEXT1,KEXT2,BETAB2,              18030217
     9XMULT,ABF,ABS,STL,SBL,SRL,PRODF,PRODS,FTL,FBL,FRL                  18030219
      EQUIVALENCE (A1(1),B1(1),PHIF2(1)),(A2(1),B2(1),PHIF3(1)),         18030301
     1(A3(1),B3(1),PHIFEX(1)),(A4(1),B4(1),PHIS2(1)),                    18030303
     2(A5(1),B5(1),PHIS3(1)),(A6(1),B6(1),PHISEX(1)),                    18030305
     3(PHIF1(1),DELR(1)), (PHIF1(26),DELZ(1)),(PHIF1(51),R(1)),          18030307
     4(PHIF1(76),JCL(1)),(PHIF1(101),IRO(1)),(PHIF1(126),ELR(1)),        18030309
     5(PHIF1(151),ELZ(1))                                                18039905
  900 DO 901 M = 1,3                                                     18030401
      READ DRUM 3,0000,B1                                                18030403
      READ DRUM 3,0680,B2                                                18030405
      READ DRUM 3,1370,B3                                                18030407
      READ DRUM 4,0000,B4                                                18030409
      READ DRUM 4,0680,B5                                                18030411
      READ DRUM 4,1370,B6                                                18030413
      CALL SUBOUT(SUMN2,NCELL,3750)                                      18030416
      IF(SENSE LIGHT 1)901,902                                           18030421
  901 CONTINUE                                                           18030423
      SENSE LIGHT 1                                                      18030424
      GO TO 952                                                          18030425
  902 READ TAPE 5,((PHIF2(I,J),I = 1,IMAX),J = 1,JMAX)                   18030501
      READ TAPE 5,((PHIS2(I,J),I = 1,IMAX),J = 1,JMAX)                   18030503
      REWIND 5                                                           18030505
      X = 100.0/PHIS1(NORI,NORJ)                                         18030507
      TEMP1 = 0.0                                                        18030509
      TEMP2 = 0.0                                                        18030511
      TEMP3 = 0.0                                                        18030513
      TEMP4 = 0.0                                                        18030515
  903 DO 904 I = 2,LIM1                                                  18030517
      DO 904 J = 2,LIM2                                                  18030519
      TEMP1 = TEMP1+PHIF1(I,J)*A7(I,J)                                   18039901
      TEMP2 = TEMP2+PHIS1(I,J)*B6(I,J)                                   18030523
      TEMP3 = TEMP3+PHIF2(I,J)*A7(I,J)                                   18039905
      TEMP4 = TEMP4+PHIS2(I,J)*B6(I,J)                                   18030601
      PHIF1(I,J) = PHIF1(I,J)*X                                          18030603
  904 PHIS1(I,J) = PHIS1(I,J)*X                                          18030605
      XMULT = (TEMP1+TEMP2)/(TEMP3+TEMP4)                                18030607
  908 DO 911 I = 1,IMAX                                                  18030701
      PHIF1(I,1) = PHIF1(I,2)                                            18030703
```

```
      PHIS1(I,1) = PHIS1(I,2)                                           18030705
      IF(IR)909,910,910                                                 18030707
  909 PHIF1(I,JMAX) = PHIF1(I,LIM2)                                     18030709
      PHIS1(I,JMAX) = PHIS1(I,LIM2)                                     18030711
  910 CONTINUE                                                          18030713
  911 CONTINUE                                                          18030715
  912 DO 917 J = 1,JMAX                                                 18030801
      IF(IT)913,914,914                                                 18030803
  913 PHIF1(1,J) = PHIF1(2,J)                                           18030805
      PHIS1(1,J) = PHIS1(2,J)                                           18030807
  914 IF(IB)915,916,916                                                 18030809
  915 PHIF1(IMAX,J) = PHIF1(LIM1,J)                                     18030811
      PHIS1(IMAX,J) = PHIS1(LIM1,J)                                     18030813
  916 CONTINUE                                                          18030815
  917 CONTINUE                                                          18030817
  918 DO 919 M = 1,3                                                    18030901
      READ DRUM 1,0000,A1                                               18030903
      READ DRUM 1,0680,A2                                               18030905
      READ DRUM 1,1370,A3                                               18030907
      READ DRUM 2,0000,A4                                               18030909
      READ DRUM 2,0680,A5                                               18030911
      READ DRUM 2,1370,A6                                               18030913
      CALL SUBOUT(SUMN1,NCELL,3750)                                     18030916
      IF(SENSE LIGHT 1)919,920                                          18031001
  919 CONTINUE                                                          18031003
      SENSE LIGHT 1                                                     18031005
      GO TO 952                                                         18031007
  920 FTL = 0.0                                                         18039907
      FBL = 0.0                                                         18031014
      FRL = 0.0                                                         18031016
      PRODF = 0.0                                                       18031018
      PRODS = 0.0                                                       18031020
  921 DO 931 J = 2,JMAX                                                 18031101
  922 IF(IT)924,923,923                                                 18031103
  923 FTL = FTL+(PHIF1(2,J)-PHIF1(1,J))*A2(1,J)*3.1415927               18039909
  924 IF(IB)926,925,925                                                 18031107
  925 FBL = FBL+(PHIF1(LIM1,J)-PHIF1(IMAX,J))*A1(IMAX,J)                18031109
     1*3.1415927                                                        18039911
  926 DO 931 I = 1,IMAX                                                 18031111
      IF(J-JMAX)929,927,929                                             18031113
  927 IF(IR)930,928,928                                                 18031115
  928 FRL = FRL+(PHIF1(I,LIM2)-PHIF1(I,J))*A4(I,J)                      18031117
     1*3.1415927                                                        18039913
  929 PRODF = PRODF+PHIF1(I,J)*A6(I,J)*3.1415927                        18039915
      PRODS = PRODS+PHIS1(I,J)*A5(I,J)*3.1415927                        18039917
  930 CONTINUE                                                          18031123
  931 CONTINUE                                                          18031125
  932 DO 933 M = 1,3                                                    18031201
      READ DRUM 3,0000,B1                                               18031203
      READ DRUM 3,0680,B2                                               18031205
      READ DRUM 3,1370,B3                                               18031207
      READ DRUM 4,0000,B4                                               18031209
      READ DRUM 4,0680,B5                                               18031211
      READ DRUM 4,1370,B6                                               18031213
      CALL SUBOUT(SUMN2,NCELL,3750)                                     18031216
      IF(SENSE LIGHT 1)933,934                                          18031301
```

```
933 CONTINUE                                                            18031303
    SENSE LIGHT 1                                                       18031305
    GO TO 952                                                           18031307
934 ABF = 0.0                                                           18031309
    ABS = 0.0                                                           18031311
    STL = 0.0                                                           18031313
    SBL = 0.0                                                           18031315
    SRL = 0.0                                                           18031317
941 DO 951 J = 2,JMAX                                                   18031401
942 IF(IT)944,943,943                                                   18031403
943 STL = STL+(PHIS1(2,J)-PHIS1(1,J))*B2(1,J)*3.1415927                 18039919
944 IF(IB)946,945,945                                                   18031407
945 SBL = SBL+(PHIS1(LIM1,J)-PHIS1(IMAX,J))*B1(IMAX,J)                  18031409
   1*3.1415927                                                          18039921
946 DO 951 I = 1,IMAX                                                   18031411
    IF(J-JMAX)949,947,949                                               18031413
947 IF(IR)950,948,948                                                   18031415
948 SRL = SRL+(PHIS1(I,LIM2)-PHIS1(I,J))*B4(I,J)                        18031417
   1*3.1415927                                                          18039923
949 ABF = ABF+PHIF1(I,J)*(A7(I,J)-B5(I,J))*3.1415927                    18039924
    ABS = ABS+PHIS1(I,J)*B6(I,J)*3.1415927                              18039925
950 CONTINUE                                                            18031423
951 CONTINUE                                                            18031425
952 RETURN                                                              18031501
    END(0,1,0,0,1)                                                      18031503
```

```
COUT22SUB
      SUBROUTINE OUT22                                                  18031025
      DIMENSION A1(25,25),A2(25,25),A3(25,25),A4(25,25),                18030105
     1A5(25,25),A6(25,25),A7(25,25),B1(25,25),B2(25,25),                18030107
     2B3(25,25),B4(25,25),B5(25,25),B6(25,25),                          18030109
     3PHIF1(25,25),PHIF2(25,25),PHIF3(25,25),PHIFEX(25,25),             18030111
     4PHIS1(25,25),PHIS2(25,25),PHIS3(25,25 ),PHISEX(25,25),            18030113
     5DELR(25),DELZ(25),R(25),JCL(25),ELR(25),IRO(25),                  18030115
     6ELZ(25),HOL(12),NCC(10),RGFA(625),RGSA(625)                       18039901
      COMMON A1,A2,A3,A4,A5,A6,B1,B2,B3,B4,B5,B6,VERGL,VERGF,HOL,NCC,   18039903
     1A7,PHIF1,PHIF2,PHIF3,PHIFEX,PHIS1,PHIS2,PHIS3,                    18030203
     2PHISEX,DELR,DELZ,R,IMAX,JMAX,NORI,NORJ,NREG,NDELR,NDELZ,          18030205
     3MK,LAD,ITOP,IRIT,IBOT,PHIT1,PHIT2,PHIR1,PHIR2,PHIB1,PHIB2,        18030207
     4EPI,BETA,JCL,ELR,IRO,ELZ,IRO1,IRO2,JCL1,JCL2,D1,D2,SIG1,          18030209
     5SIG2,SFNU1,SFNU2,PROB,PHIK1,PHIK2,IT,IR,IB,ITC,IBC,LIM1,LIM2,     18030211
     6LIMI1,LIMI2,LIMJ1,LIMJ2,TEMP1,TEMP2,TEMP3,TEMP4,TEMP5,            18030213
     7TEMP6,TEMP7,TEMP8,IEND,NIT,XLAMDA,NCELL,BETAB1,SUMN1,             18030215
     8SUMN2,ILO,JLO,IHI,JHI,VERG,PHINOR,KEXT1,KEXT2,BETAB2,             18030217
     9XMULT,ABF,ABS,STL,SBL,SRL,PRODF,PRODS,FTL,FBL,FRL,RGFA,RGSA       18039903
      EQUIVALENCE (A1(1),B1(1),PHIF2(1)),(A2(1),B2(1),PHIF3(1)),        18030301
     1(A3(1),B3(1),PHIFEX(1)),(A4(1),B4(1),PHIS2(1),RGSA(1)),           18039905
     2(A5(1),B5(1),PHIS3(1),RGFA(1)),(A6(1),B6(1),PHISEX(1)),           18039907
     3(PHIF1(1),DELR(1)), (PHIF1(26),DELZ(1)),(PHIF1(51),R(1)),         18030307
     4(PHIF1(76),JCL(1)),(PHIF1(101),IRO(1)),(PHIF1(126),ELR(1)),       18030309
     5(PHIF1(151),ELZ(1))                                               18039905
  200 READ TAPE 3,((A7(I,J),I = 1,IMAX),J = 1,JMAX)                     18039901
      READ TAPE 3,(B1(1,J),J = 2,JMAX)                                  18030303
      READ TAPE 3,(B2(1,J),J = 1,LIM2)                                  18030305
      READ TAPE 3,(B3(I,1),I = 1,LIM1)                                  18030307
      REWIND 3                                                          18030309
      DO 234 M = 1,NREG                                                 18030311
      RGSA(M) = 0.0                                                     18039901
      RGFA(M) = 0.0                                                     18039903
      READ TAPE 2,IRO1,IRO2,JCL1,JCL2,D1,D2,SIG1,SIG2,                  18030317
     1SFNU1,SFNU2,PROB,PHIK1,PHIK2                                      18030319
      LIMI1 = IRO1+1                                                    18030320
      LIMI2 = IRO2-1                                                    18030322
      LIMJ1 = JCL1+1                                                    18030324
      LIMJ2 = JCL2-1                                                    18030325
      IF(IRO2-IRO1-1)205,205,201                                        18030401
  201 IF(JCL2-JCL1-1)205,205,203                                        18030403
  203 DO 204 I = LIMI1,LIMI2                                            18030409
      DO 204 J = LIMJ1,LIMJ2                                            18030411
      TEMP1 = (2.0*B1(1,J)+B2(1,J)/2.0)/4.0                             18030413
      TEMP2 = (2.0*B1(1,J)-B2(1,J-1)/2.0)/4.0                           18030415
      TEMP3 = TEMP1*B2(1,J)*B3(I-1,1)+                                  18030417
     1TEMP2*B2(1,J-1)*B3(I-1,1)+TEMP2*B2(1,J-1)*                        18030419
     2B3(I,1)+TEMP1*B2(1,J)*B3(I,1)                                     18030421
      RGSA(M) = RGSA(M)+PHIS1(I,J)*SIG2*TEMP3                           18039905
  204 RGFA(M) = RGFA(M)+PHIF1(I,J)*(1.0-PROB)*SIG1*TEMP3                18039907
  205 IF(LIMJ2-LIMJ1)213,206,206                                        18030501
  206 DO 212 J = LIMJ1,LIMJ2                                            18030503
      TEMP1 = (2.0*B1(1,J)-B2(1,J-1)/2.0)/4.0                           18030505
      TEMP2 = (2.0*B1(1,J)+B2(1,J)/2.0)/4.0                             18030507
      IF(IRO1-1)207,207,208                                             18030509
```

```
207 IF(ITOP)208,208,209                                                 18030511
208 TEMP3 = TEMP1*B2(1,J-1)*B3(IRO1,1)+                                 18030513
   1TEMP2*B2(1,J)*B3(IRO1,1)                                            18030515
    RGSA(M) = RGSA(M)+PHIS1(IRO1,J)*SIG2*TEMP3                          18039909
    RGFA(M) = RGFA(M)+PHIF1(IRO1,J)*(1.0-PROB)*SIG1*TEMP3               18039911
209 IF(IMAX-IRO2)210,210,211                                            18030601
210 IF(IBOT)211,211,212                                                 18030603
211 TEMP3 = TEMP2*B2(1,J)*B3(IRO2-1,1)+                                 18030607
   1TEMP1*B2(1,J-1)*B3(IRO2-1,1)                                        18030609
    RGSA(M) = RGSA(M)+PHIS1(IRO2,J)*SIG2*TEMP3                          18039913
    RGFA(M) = RGFA(M)+PHIF1(IRO2,J)*(1.0-PROB)*SIG1*TEMP3               18039915
212 CONTINUE                                                            18030615
213 IF(LIMI2-LIMI1)220,214,214                                          18030701
214 DO 219 I = LIMI1,LIMI2                                              18030703
    IF(JCL1-1)216,216,215                                               18030705
215 TEMP1 = (2.0*B1(1,JCL1)+B2(1,JCL1)/2.0)*(B2(1,JCL1)*                18030707
   1B3(I-1,1)/4.0+B2(1,JCL1)*B3(I,1)/4.0)                               18030709
    RGSA(M) = RGSA(M)+PHIS1(I,JCL1)*SIG2*TEMP1                          18039917
    RGFA(M) = RGFA(M)+PHIF1(I,JCL1)*(1.0-PROB)*SIG1*TEMP1               18039919
216 IF(JMAX-JCL2)217,217,218                                            18030715
217 IF(IRIT)218,218,219                                                 18030717
218 TEMP1 = (2.0*B1(1,JCL2)-B2(1,JCL2-1)/2.0)*(B2(1,JCL2-1)*            18030719
   1B3(I-1,1)/4.0+B2(1,JCL2-1)*B3(I,1)/4.0)                             18030721
    RGSA(M) = RGSA(M)+PHIS1(I,JCL2)*SIG2*TEMP1                          18039921
    RGFA(M) = RGFA(M)+PHIF1(I,JCL2)*(1.0-PROB)*SIG1*TEMP1               18039923
219 CONTINUE                                                            18030801
220 TEMP1 = (2.0*B1(1,JCL1)+B2(1,JCL1)/2.0)*(B2(1,JCL1)*                18030803
   1B3(IRO2-1,1)/4.0)                                                   18030805
    TEMP2 = (2.0*B1(1,JCL2)-B2(1,JCL2-1)/2.0)*(B2(1,JCL2-1)*            18030807
   1B3(IRO2-1,1)/4.0)                                                   18030809
    TEMP3 = (2.0*B1(1,JCL2)-B2(1,JCL2-1)/2.0)*(B2(1,JCL2-1)*            18030811
   1B3(IRO1,1)/4.0)                                                     18030813
    TEMP4 = (2.0*B1(1,JCL1)+B2(1,JCL1)/2.0)*(B2(1,JCL1)*                18030815
   1B3(IRO1,1)/4.0)                                                     18030817
221 IF(JCL1-1)227,227,222                                               18030901
222 IF(IRO1-1)223,223,224                                               18030903
223 IF (ITOP) 224,224,300
224 RGSA(M) = RGSA(M)+PHIS1(IRO1,JCL1)*SIG2*TEMP4                       18039901
    RGFA(M) = RGFA(M)+PHIF1(IRO1,JCL1)*(1.0-PROB)*SIG1*TEMP4            18039903
300 IF (IMAX-IRO2) 225,225,226
225 IF(IBOT)226,226,227                                                 18030911
226 RGSA(M) = RGSA(M)+PHIS1(IRO2,JCL1)*SIG2*TEMP1                       18039905
    RGFA(M) = RGFA(M)+PHIF1(IRO2,JCL1)*(1.0-PROB)*SIG1*TEMP1            18039907
227 IF (JMAX-JCL2) 228,228,400
228 IF (IRIT) 400,400,233
400 IF (IRO1-1) 229,229,230
229 IF(ITOP)230,230,401
230 RGSA(M) = RGSA(M)+PHIS1(IRO1,JCL2)*SIG2*TEMP3                       18039909
    RGFA(M) = RGFA(M)+PHIF1(IRO1,JCL2)*(1.0-PROB)*SIG1*TEMP3            18039911
401 IF (IMAX-IRO2) 231,231,232
231 IF(IBOT)232,232,233                                                 18031011
232 RGSA(M) = RGSA(M)+PHIS1(IRO2,JCL2)*SIG2*TEMP2                       18039913
    RGFA(M) = RGFA(M)+PHIF1(IRO2,JCL2)*(1.0-PROB)*SIG1*TEMP2            18039915
233 CONTINUE                                                            18031017
234 CONTINUE                                                            18031019
```

```
      REWIND 2                                                          18031021
      IF(LAD)1000,1000,1001                                             18039902
 1000 XLAMDA = (ABF+ABS+FTL+STL+FBL+SBL+FRL+SRL)/(PRODF+PRODS)          18039903
 1001 DO 1002 M = 1,NREG                                                18039905
      RGSA(M) = RGSA(M)*3.1415927                                       18039917
 1002 RGFA(M) = RGFA(M)*3.1415927                                       18039919
      WRITE TAPE 6,((PHIF1(I,J),I = 1,IMAX),J = 1,JMAX)                 18039911
      WRITE TAPE 6,((PHIS1(I,J),I = 1,IMAX),J = 1,JMAX)                 18039913
      REWIND 6                                                          18039915
      RETURN                                                            18031023
      END(0,1,0,0,1)                                                    18031024
```

```
COUT3 SUB      EQUIPOISE OUT3 SUB - 960-9000                                18030101
      SUBROUTINE OUT3                                                      18030102
      DIMENSION A1(25,25),A2(25,25),A3(25,25),A4(25,25),                   18030105
     1A5(25,25),A6(25,25),A7(25,25),B1(25,25),B2(25,25),                   18030107
     2B3(25,25),B4(25,25),B5(25,25),B6(25,25),                             18030109
     3PHIF1(25,25),PHIF2(25,25),PHIF3(25,25),PHIFEX(25,25),                18030111
     4PHIS1(25,25),PHIS2(25,25),PHIS3(25,25 ),PHISEX(25,25),               18030113
     5DELR(25),DELZ(25),R(25),JCL(25),ELR(25),IRO(25),                     18030115
     6ELZ(25),HOL(12),NCC(10)                                              18039901
      COMMON A1,A2,A3,A4,A5,A6,B1,B2,B3,B4,B5,B6,VERGL,VERGF,HOL,NCC,      18039903
     1A7,PHIF1,PHIF2,PHIF3,PHIFEX,PHIS1,PHIS2,PHIS3,                       18030203
     2PHISEX,DELR,DELZ,R,IMAX,JMAX,NORI,NORJ,NREG,NDELR,NDELZ,             18030205
     3MK,LAD,ITOP,IRIT,IBOT,PHIT1,PHIT2,PHIR1,PHIR2,PHIB1,PHIB2,           18030207
     4EPI,BETA,JCL,ELR,IRO,ELZ,IRO1,IRO2,JCL1,JCL2,D1,D2,SIG1,             18030209
     5SIG2,SFNU1,SFNU2,PROB,PHIK1,PHIK2,IT,IR,IB,ITC,IBC,LIM1,LIM2,        18030211
     6LIMI1,LIMI2,LIMJ1,LIMJ2,TEMP1,TEMP2,TEMP3,TEMP4,TEMP5,               18030213
     7TEMP6,TEMP7,TEMP8,IEND,NIT,XLAMDA,NCELL,BETAB1,SUMN1,                18030215
     8SUMN2,ILO,JLO,IHI,JHI,VERG,PHINOR,KEXT1,KEXT2,BETAB2,                18030217
     9XMULT,ABF,ABS,STL,SBL,SRL,PRODF,PRODS,FTL,FBL,FRL                    18030219
      EQUIVALENCE (A1(1),B1(1),PHIF2(1)),(A2(1),B2(1),PHIF3(1)),           18030301
     1(A3(1),B3(1),PHIFEX(1)),(A4(1),B4(1),PHIS2(1)),                      18030303
     2(A5(1),B5(1),PHIS3(1)),(A6(1),B6(1),PHISEX(1)),                      18030305
     3(PHIF1(1),DELR(1)), (PHIF1(26),DELZ(1)),(PHIF1(51),R(1)),            18030307
     4(PHIF1(76),JCL(1)),(PHIF1(101),IRO(1)),(PHIF1(126),ELR(1)),          18030309
     5(PHIF1(151),ELZ(1))                                                  18039905
  900 PRINT 9000                                                           18039904
      PRINT 9001,NIT,VERGL,VERGF,XLAMDA,XMULT                              18030403
      PRINT 9012                                                           18030405
      WRITE OUTPUT TAPE 9,9007                                             18030407
      WRITE OUTPUT TAPE 9,9008,(HOL(I),I = 1,12)                           18030408
      WRITE OUTPUT TAPE 9,9001,NIT,VERGL,VERGF,XLAMDA,XMULT                18030409
  998 NOOO = 0                                                             18030414
      NOOOOO = 0                                                           18030416
      DO 999 I = 1,IMAX                                                    18030417
      DO 999 J = 1,JMAX                                                    18030419
  999 A6(I,J) = PHIF1(I,J)                                                 18030421
  904 NOOC = JMAX                                                          18030423
      MOO = 0                                                              18030425
  905 IF(NOOO)906,906,909                                                  18030501
  906 WRITE OUTPUT TAPE 9,9003                                             18030503
      GO TO 911                                                            18030505
  909 WRITE OUTPUT TAPE 9,9005                                             18030507
  911 IF(NOOC-10)912,912,913                                               18030509
  912 LOO = MOO+1                                                          18030511
      MOO = JMAX                                                           18030513
      SENSE LIGHT 1                                                        18030515
      GO TO 902                                                            18030517
  913 LOO = MOO+1                                                          18030519
      MOO = MOO+10                                                         18030521
      NOOC = NOOC-10                                                       18030523
  902 DO 901 J = LOO,MOO                                                   18030601
  901 NCC(J) = J                                                           18030603
      WRITE OUTPUT TAPE 9,9013,(NCC(J),J=LOO,MOO)                          18030605
  914 DO 916 I = 1,IMAX                                                    18030607
  916 WRITE OUTPUT TAPE 9,9004,I,(A6(I,J),J=LOO,MOO)                       18030609
      IF(SENSE LIGHT 1)929,918                                             18030613
```

```
  918 WRITE OUTPUT TAPE 9,9007                                          18030617
      WRITE OUTPUT TAPE 9,9008,(HOL(I),I = 1,12)                        18030618
  920 GO TO 905                                                         18030619
  929 IF(NOOOOO)939,932,939                                             18030701
  932 WRITE OUTPUT TAPE 9,9007                                          18030703
      WRITE OUTPUT TAPE 9,9008,(HOL(I),I=1,12)                          18030705
      NOOOOO = 1
      NOOO = 1                                                          18030717
      DO 933 I = 1,IMAX                                                 18030719
      DO 933 J = 1,JMAX                                                 18030721
  933 A6(I,J) = PHIS1(I,J)                                              18030723
      GO TO 904                                                         18030725
 9000 FORMAT(1H0/////)                                                  18039903
 9012 FORMAT(12H0END OF CASE//////)                                     18030805
 9001 FORMAT(14H0ITERATION NO.I4,16H  CONVR(NUCRIT)=1PE10.3,            18039905
     114H  CONVR(FLUX)=E10.3,14H  NU CRITICAL=E12.5,                    18030809
     213H  FLUX RATIO=E12.5)                                            18030811
 9013 FORMAT(1H0I10,9I11)                                               18030813
 9004 FORMAT(1H0I2,1PE12.3,9E11.3)                                      18030815
 9003 FORMAT(16H0 FAST FLUX(I,J))                                       18030817
 9005 FORMAT(16H0 SLOW FLUX(I,J))                                       18030819
 9006 FORMAT(1H0)                                                       18030821
 9007 FORMAT(1H1)                                                       18030823
 9008 FORMAT(12A6)                                                      18030825
  939 RETURN                                                            18031107
      END(0,1,0,0,1)                                                    18031109
```

```
COUT33SUB   EQUIPOISE OUT33 SUB - 900-9000                                18030401
      SUBROUTINE OUT33                                                    18030402
      DIMENSION A1(25,25),A2(25,25),A3(25,25),A4(25,25),                  18030105
     1A5(25,25),A6(25,25),A7(25,25),B1(25,25),B2(25,25),                  18030107
     2B3(25,25),B4(25,25),B5(25,25),B6(25,25),                            18030109
     3PHIF1(25,25),PHIF2(25,25),PHIF3(25,25),PHIFEX(25,25),               18030111
     4PHIS1(25,25),PHIS2(25,25),PHIS3(25,25 ),PHISEX(25,25),              18030113
     5DELR(25),DELZ(25),R(25),JCL(25),ELR(25),IRO(25),                    18030115
     6ELZ(25),HOL(12),NCC(10),RGFA(625),RGSA(625)                         18039901
      COMMON A1,A2,A3,A4,A5,A6,B1,B2,B3,B4,B5,B6,VERGL,VERGF,HOL,NCC,     18039903
     1A7,PHIF1,PHIF2,PHIF3,PHIFEX,PHIS1,PHIS2,PHIS3,                      18030203
     2PHISEX,DELR,DELZ,R,IMAX,JMAX,NORI,NORJ,NREG,NDELR,NDELZ,            18030205
     3MK,LAD,ITOP,IRIT,IBOT,PHIT1,PHIT2,PHIR1,PHIR2,PHIB1,PHIB2,          18030207
     4EPI,BETA,JCL,ELR,IRO,ELZ,IRO1,IRO2,JCL1,JCL2,D1,D2,SIG1,            18030209
     5SIG2,SFNU1,SFNU2,PROB,PHIK1,PHIK2,IT,IR,IB,ITC,IBC,LIM1,LIM2,       18030211
     6LIMI1,LIMI2,LIMJ1,LIMJ2,TEMP1,TEMP2,TEMP3,TEMP4,TEMP5,              18030213
     7TEMP6,TEMP7,TEMP8,IEND,NIT,XLAMDA,NCELL,BETAB1,SUMN1,               18030215
     8SUMN2,ILO,JLO,IHI,JHI,VERG,PHINOR,KEXT1,KEXT2,BETAB2,               18030217
     9XMULT,ABF,ABS,STL,SBL,SRL,PRODF,PRODS,FTL,FBL,FRL,RGFA,RGSA         18039903
      EQUIVALENCE (A1(1),B1(1),PHIF2(1)),(A2(1),B2(1),PHIF3(1)),          18030301
     1(A3(1),B3(1),PHIFEX(1)),(A4(1),B4(1),PHIS2(1),RGSA(1)),             18039905
     2(A5(1),B5(1),PHIS3(1),RGFA(1)),(A6(1),B6(1),PHISEX(1)),             18039907
     3(PHIF1(1),DELR(1)), (PHIF1(26),DELZ(1)),(PHIF1(51),R(1)),           18030307
     4(PHIF1(76),JCL(1)),(PHIF1(101),IRO(1)),(PHIF1(126),ELR(1)),         18030309
     5(PHIF1(151),ELZ(1))                                                 18039905
      WRITE OUTPUT TAPE 9,9007                                            18030403
      WRITE OUTPUT TAPE 9,9006,(HOL(I),I = 1,12)                          18030404
  900 WRITE OUTPUT TAPE 9,9008,PRODF,PRODS,                               18030405
     1ABF,ABS,FTL,STL,FRL,SRL,FBL,SBL                                     18030407
      WRITE OUTPUT TAPE 9,9009                                            18030409
  936 DO 938 M = 1,NREG                                                   18030417
  938 WRITE OUTPUT TAPE 9,9010,M,RGFA(M),RGSA(M)                          18039901
      WRITE OUTPUT TAPE 9,9007                                            18030420
 9007 FORMAT(1H1)                                                         18030422
 9006 FORMAT(12A6)                                                        18030424
 9008 FORMAT(33H0 TOTAL FAST GROUP PRODUCTION  = 1PE12.5/                 18030501
     133H0 TOTAL SLOW GROUP PRODUCTION  = 1PE12.5/                        18030503
     233H0 TOTAL FAST GROUP ABSORPTION  = 1PE12.5/                        18030505
     333H0 TOTAL SLOW GROUP ABSORPTION  = 1PE12.5/                        18030507
     433H0 TOTAL FAST GROUP TOP LEAKAGE = 1PE12.5/                        18030509
     533H0 TOTAL SLOW GROUP TOP LEAKAGE = 1PE12.5/                        18030511
     633H0 TOTAL FAST GROUP RIT LEAKAGE = 1PE12.5/                        18030513
     733H0 TOTAL SLOW GROUP RIT LEAKAGE = 1PE12.5/                        18030515
     833H0 TOTAL FAST GROUP BOT LEAKAGE = 1PE12.5/                        18030517
     933H0 TOTAL SLOW GROUP BOT LEAKAGE = 1PE12.5///)                     18030519
 9009 FORMAT(20H0 REGION ABSORPTIONS/                                     18030521
     136H0 REGION   FAST ABSORP   SLOW ABSORP)                            18030523
 9010 FORMAT(3H   I3,4H    1PE12.5,2H  1PE12.5)                           18030524
      RETURN                                                              18030525
      END(0,1,0,0,1)                                                      18030526
```

```
CINPT SUB     EQUIPOISE INPUT SUB - 200-2000                                18030101
      SUBROUTINE INPUT                                                      18030102
      DIMENSION A1(25,25),A2(25,25),A3(25,25),A4(25,25),                    18030105
     1A5(25,25),A6(25,25),A7(25,25),B1(25,25),B2(25,25),                    18030107
     2B3(25,25),B4(25,25),B5(25,25),B6(25,25),                              18030109
     3PHIF1(25,25),PHIF2(25,25),PHIF3(25,25),PHIFEX(25,25),                 18030111
     4PHIS1(25,25),PHIS2(25,25),PHIS3(25,25 ),PHISEX(25,25),                18030113
     5DELR(25),DELZ(25),R(25),JCL(25),ELR(25),IRO(25),                      18030115
     6ELZ(25),HOL(12),NCC(10)                                               18039901
      COMMON A1,A2,A3,A4,A5,A6,B1,B2,B3,B4,B5,B6,VERGL,VERGF,HOL,NCC,       18039903
     1A7,PHIF1,PHIF2,PHIF3,PHIFEX,PHIS1,PHIS2,PHIS3,                        18030203
     2PHISEX,DELR,DELZ,R,IMAX,JMAX,NORI,NORJ,NREG,NDELR,NDELZ,              18030205
     3MK,LAD,ITOP,IRIT,IBOT,PHIT1,PHIT2,PHIR1,PHIR2,PHIB1,PHIB2,            18030207
     4EPI,BETA,JCL,ELR,IRO,ELZ,IRO1,IRO2,JCL1,JCL2,D1,D2,SIG1,              18030209
     5SIG2,SFNU1,SFNU2,PROB,PHIK1,PHIK2,IT,IR,IB,ITC,IBC,LIM1,LIM2,         18030211
     6LIMI1,LIMI2,LIMJ1,LIMJ2,TEMP1,TEMP2,TEMP3,TEMP4,TEMP5,                18030213
     7TEMP6,TEMP7,TEMP8,IEND,NIT,XLAMDA,NCELL,BETAB1,SUMN1,                 18030215
     8SUMN2,ILO,JLO,IHI,JHI,VERG,PHINOR,KEXT1,KEXT2,BETAB2,                 18030217
     9XMULT,ABF,ABS,STL,SBL,SRL,PRODF,PRODS,FTL,FBL,FRL                     18030219
      EQUIVALENCE (A1(1),B1(1),PHIF2(1)),(A2(1),B2(1),PHIF3(1)),            18030301
     1(A3(1),B3(1),PHIFEX(1)),(A4(1),B4(1),PHIS2(1)),                       18030303
     2(A5(1),B5(1),PHIS3(1)),(A6(1),B6(1),PHISEX(1)),                       18030305
     3(PHIF1(1),DELR(1)), (PHIF1(26),DELZ(1)),(PHIF1(51),R(1)),             18030307
     4(PHIF1(76),JCL(1)),(PHIF1(101),IRO(1)),(PHIF1(126),ELR(1)),           18030309
     5(PHIF1(151),ELZ(1))                                                   18039905
  200 READ 2000,(HOL(I),I = 1,12)                                           18039901
      READ 2001,IMAX,JMAX,NORI,NORJ,JHI,JLO,IHI,LAD,ITOP,                   18039912
     1IRIT,IBOT,PHIT1,PHIT2,PHIR1,PHIR2,PHIB1,                              18030405
     2PHIB2,EPI,BETA                                                        18030407
      VERG = 100.0                                                          18039906
      IF(IMAX)201,201,202                                                   18030409
  201 IEND = -1                                                             18030411
      GO TO 212                                                             18030413
  202 IEND = +1                                                             18030415
      NDELZ = 0                                                             18030417
      IRO(1) = 1                                                            18030419
      NQ1 = 1
      NQ2 = 8
  203 READ2002,((ELZ(I),IRO(I+1)),I=NQ1,NQ2)
      DO 204 K = NQ1,NQ2                                                    18030507
      IRQO = IRO(K+1)                                                       18030509
      IF(IMAX-IRQO)205,205,204                                              18030511
  204 NDELZ = NDELZ+1                                                       18030513
      NQ1 = NQ2+1
      NQ2 = NQ1+7
      GO TO 203                                                             18030515
  205 NDELZ = NDELZ+1                                                       18030517
      NDELR = 0                                                             18030519
      JCL(1) = 1                                                            18030521
      NQ1 = 1
      NQ2 = 8
  206 READ2002,((ELR(J),JCL(J+1)),J=NQ1,NQ2)
      DO 207 K = NQ1,NQ2                                                    18030607
      JCQL = JCL(K+1)                                                       18030609
      IF(JMAX-JCQL)208,208,207                                              18030611
  207 NDELR = NDELR+1                                                       18030613
```

```
      NQ1 = NQ2+1
      NQ2 = NQ1+7
      GO TO 206                                                         18030615
  208 NDELR = NDELR+1
      NREG = 0                                                          18030619
  209 READ 2003,IRO1,IRO2,JCL1,JCL2,D1,D2,SIG1,SIG2,                    18030621
     1SFNU1,SFNU2,PROB,PHIK1,PHIK2                                      18030623
      IF(IRO1)211,211,210                                               18030701
  210 NREG = NREG+1                                                     18030703
      WRITE TAPE 2,IRO1,IRO2,JCL1,JCL2,D1,D2,SIG1,                      18030705
     1SIG2,SFNU1,SFNU2,PROB,PHIK1,PHIK2                                 18030707
      GO TO 209                                                         18030709
  211 REWIND 2                                                          18030711
      NIT = 0                                                           18030721
 2000 FORMAT(12A6)                                                      18039903
 2001 FORMAT(4I3,7I2,7E6.3,F4.1)                                        18039914
 2002 FORMAT(8(E6.3,I3))                                                18030807
 2003 FORMAT(4I3,6E7.4,3E6.3)                                           18030809
  212 RETURN                                                            18030813
      END(0,1,0,0,1)                                                    18030525
```

```
COUT1 SUB      EQUIPOISE OUT1 SUB - 800-8000                                18030101
      SUBROUTINE OUT1                                                      18030102
      DIMENSION A1(25,25),A2(25,25),A3(25,25),A4(25,25),                   18030105
     1A5(25,25),A6(25,25),A7(25,25),B1(25,25),B2(25,25),                   18030107
     2B3(25,25),B4(25,25),B5(25,25),B6(25,25),                             18030109
     3PHIF1(25,25),PHIF2(25,25),PHIF3(25,25),PHIFEX(25,25),                18030111
     4PHIS1(25,25),PHIS2(25,25),PHIS3(25,25 ),PHISEX(25,25),               18030113
     5DELR(25),DELZ(25),R(25),JCL(25),ELR(25),IRO(25),                     18030115
     6ELZ(25),HOL(12),NCC(10)                                              18039901
      COMMON A1,A2,A3,A4,A5,A6,B1,B2,B3,B4,B5,B6,VERGL,VERGF,HOL,NCC,      18039903
     1A7,PHIF1,PHIF2,PHIF3,PHIFEX,PHIS1,PHIS2,PHIS3,                       18030203
     2PHISEX,DELR,DELZ,R,IMAX,JMAX,NORI,NORJ,NREG,NDELR,NDELZ,             18030205
     3MK,LAD,ITOP,IRIT,IBOT,PHIT1,PHIT2,PHIR1,PHIR2,PHIB1,PHIB2,           18030207
     4EPI,BETA,JCL,ELR,IRO,ELZ,IRO1,IRO2,JCL1,JCL2,D1,D2,SIG1,             18030209
     5SIG2,SFNU1,SFNU2,PROB,PHIK1,PHIK2,IT,IR,IB,ITC,IBC,LIM1,LIM2,        18030211
     6LIMI1,LIMI2,LIMJ1,LIMJ2,TEMP1,TEMP2,TEMP3,TEMP4,TEMP5,               18030213
     7TEMP6,TEMP7,TEMP8,IFNO,NIT,XLAMDA,NCELL,BETAB1,SUMN1,                18030215
     8SUMN2,ILO,JLO,IHI,JHI,VERG,PHINOR,KEXT1,KEXT2,BETAB2,                18030217
     9XMULT,ABF,ABS,STL,SBL,SRL,PRODF,PRODS,FTL,FBL,FRL                    18030219
      EQUIVALENCE (A1(1),B1(1),PHIF2(1)),(A2(1),B2(1),PHIF3(1)),           18030301
     1(A3(1),B3(1),PHIFEX(1)),(A4(1),B4(1),PHIS2(1)),                      18030303
     2(A5(1),B5(1),PHIS3(1)),(A6(1),B6(1),PHISEX(1)),                      18030305
     3(PHIF1(1),DELR(1)), (PHIF1(26),DELZ(1)),(PHIF1(51),R(1)),            18030307
     4(PHIF1(76),JCL(1)),(PHIF1(101),IRO(1)),(PHIF1(126),ELR(1)),          18030309
     5(PHIF1(151),ELZ(1))                                                  18039905
  800 WRITE OUTPUT TAPE 9,8000                                             18030401
      WRITE OUTPUT TAPE 9,8001,(HOL(I),I = 1,12)                           18030403
      PRINT 8000                                                           18030405
      PRINT 8001,(HOL(I),I = 1,12)                                         18030407
      WRITE OUTPUT TAPE 9,8002                                             18030409
      PRINT 8002                                                           18030411
      WRITE OUTPUT TAPE 9,8003,IMAX,JMAX,NREG,ITOP,                        18030413
     1IRIT,IBOT,NORI,NORJ,EPI                                              18030415
      WRITE OUTPUT TAPE 9,8004                                             18030417
      WRITE OUTPUT TAPE 9,8005,IRO(1),((ELZ(I),IRO(I+1)),I=1,NDELZ)        18030419
      WRITE OUTPUT TAPE 9,8006                                             18030420
      WRITE OUTPUT TAPE 9,8005,JCL(1),((ELR(J),JCL(J+1)),J=1,NDELR)        18030421
      WRITE OUTPUT TAPE 9,8007                                             18030423
  801 PRINT 8003,IMAX,JMAX,NREG,ITOP,IRIT,IBOT,NORI,NORJ,EPI               18030503
      PRINT 8004                                                           18030505
      PRINT 8005,IRO(1),((ELZ(I),IRO(I+1)),I = 1,NDELZ)                    18030507
      PRINT 8006                                                           18030509
      PRINT 8005,JCL(1),((ELR(J),JCL(J+1)),J = 1,NDELR)                    18030511
      PRINT 8007                                                           18030513
  802 DO 804 L = 1,NREG                                                    18030601
      READ TAPE 2,IRO1,IRO2,JCL1,JCL2,D1,D2,SIG1,SIG2,                     18030603
     1SFNU1,SFNU2,PROB,PHIK1,PHIK2                                         18030605
      WRITE OUTPUT TAPE 9,8008,L,IRO1,IRO2,JCL1,JCL2,D1,D2,                18039907
     1SIG1,SIG2,SFNU1,SFNU2,PROB,PHIK1,PHIK2                               18030609
  803 PRINT 8008,L,IRO1,IRO2,JCL1,JCL2,D1,D2,SIG1,SIG2,                    18039909
     1SFNU1,SFNU2,PROB,PHIK1,PHIK2                                         18030615
  804 CONTINUE                                                             18030617
      REWIND 2                                                             18030619
  805 PRINT 8000                                                           18030623
 8000 FORMAT(1H1)                                                          18030701
 8001 FORMAT(12A6)                                                         18030703
```

```
8002 FORMAT(1H )                                                        18030705
8003 FORMAT(23H0REACTOR SPECIFICATIONS/11H0  I(ROWS)=I2,                18030707
    110H  J(COLM)=I2,10H  NO.REG.=I2,19H  BND.COND.(T,R,B)=I1,          18030709
    21H,I1,1H,I1,10H  I(NORM)=I2,10H  J(NORM)=I2,6H  EPI=1PE10.3//)     18030711
8004 FORMAT(20H0MESH SPECIFICATIONS/12H0   I   DELZ)                    18030713
8005 FORMAT(1H I4,10(F7.3,I4))                                          18030715
8006 FORMAT(12H0   J   DELR)                                            18030717
8007 FORMAT(1H0/22H REGION SPECIFICATIONS/8H0 REG                       18030719
    162HI1  I2  J1  J2     D1          D2         SIG1        SIG2      18030721
    246HNUSF1      NUSF2   RES.ESCAPE   PHI1       PHI2)                18030723
8008 FORMAT(1H I4,I5,3I4,1P7E11.3,2E10.3)                               18030725
 806 RETURN                                                             18030716
     END(0,1,0,0,1)                                                     18030718
```

```
CBETA SUB      EQUIPOISE BETTA SUB - 6000                                18030101
      SUBROUTINE BETTA                                                  18030102
      DIMENSION A1(25,25),A2(25,25),A3(25,25),A4(25,25),                18030105
     1A5(25,25),A6(25,25),A7(25,25),B1(25,25),B2(25,25),                18030107
     2B3(25,25),B4(25,25),B5(25,25),B6(25,25),                          18030109
     3PHIF1(25,25),PHIF2(25,25),PHIF3(25,25),PHIFEX(25,25),             18030111
     4PHIS1(25,25),PHIS2(25,25),PHIS3(25,25 ),PHISEX(25,25),            18030113
     5DELR(25),DELZ(25),R(25),JCL(25),ELR(25),IRO(25),                  18030115
     6ELZ(25),HOL(12),NCC(10)                                           18039901
      COMMON A1,A2,A3,A4,A5,A6,B1,B2,B3,B4,B5,B6,VERGL,VERGF,HOL,NCC,   18039903
     1A7,PHIF1,PHIF2,PHIF3,PHIFEX,PHIS1,PHIS2,PHIS3,                    18030203
     2PHISEX,DELR,DELZ,R,IMAX,JMAX,NORI,NORJ,NREG,NDELR,NDELZ,          18030205
     3MK,LAD,ITOP,IRIT,IBOT,PHIT1,PHIT2,PHIR1,PHIR2,PHIB1,PHIB2,        18030207
     4EPI,BETA,JCL,ELR,IRO,ELZ,IRO1,IRO2,JCL1,JCL2,D1,D2,SIG1,          18030209
     5SIG2,SFNU1,SFNU2,PROB,PHIK1,PHIK2,IT,IR,IB,ITC,IBC,LIM1,LIM2,     18030211
     6LIMI1,LIMI2,LIMJ1,LIMJ2,TEMP1,TEMP2,TEMP3,TEMP4,TEMP5,            18030213
     7TEMP6,TEMP7,TEMP8,IEND,NIT,XLAMDA,NCELL,BETAB1,SUMN1,             18030215
     8SUMN2,ILO,JLO,IHI,JHI,VERG,PHINOR,KEXT1,KEXT2,BETAB2,             18030217
     9XMULT,ABF,ABS,STL,SBL,SRL,PRODF,PRODS,FTL,FBL,FRL                 18030219
      EQUIVALENCE (A1(1),B1(1),PHIF2(1)),(A2(1),B2(1),PHIF3(1)),        18030301
     1(A3(1),B3(1),PHIFEX(1)),(A4(1),B4(1),PHIS2(1)),                   18030303
     2(A5(1),B5(1),PHIS3(1)),(A6(1),B6(1),PHISEX(1)),                   18030305
     3(PHIF1(1),DELR(1)), (PHIF1(26),DELZ(1)),(PHIF1(51),R(1)),         18030307
     4(PHIF1(76),JCL(1)),(PHIF1(101),IRO(1)),(PHIF1(126),ELR(1)),       18030309
     5(PHIF1(151),ELZ(1))                                               18039905
 6000 X = 100.0/PHIS1(NORI,NORJ)                                        18030401
      VERG = 100.0                                                      18039901
      VERGL = 100.0                                                     18039903
      VERGF = 100.0                                                     18039905
      XLAMDA = 0.0                                                      18039907
      DO 6001 I = 2,LIM1                                                18030403
      DO 6001 J = 2,LIM2                                                18030405
      PHIF1(I,J) = PHIF1(I,J)*X                                         18030407
 6001 PHIS1(I,J) = PHIS1(I,J)*X                                         18030409
 1950 DO 1952 I = 1,IMAX                                                18039901
      PHIF1(I,1) = PHIF1(I,2)                                           18039903
      PHIS1(I,1) = PHIS1(I,2)                                           18039905
      IF(IR)1951,1952,1952                                              18039907
 1951 PHIF1(I,JMAX) = PHIF1(I,LIM2)                                     18039909
      PHIS1(I,JMAX) = PHIS1(I,LIM2)                                     18039910
 1952 CONTINUE                                                          18039911
 1960 DO 1964 J = 1,JMAX                                                18039913
      IF(IT)1961,1962,1962                                              18039914
 1961 PHIF1(1,J) = PHIF1(2,J)                                           18039916
      PHIS1(1,J) = PHIS1(2,J)                                           18039917
 1962 IF(IB)1963,1964,1964                                              18039919
 1963 PHIF1(IMAX,J) = PHIF1(LIM1,J)                                     18039921
      PHIS1(IMAX,J) = PHIS1(LIM1,J)                                     18039922
 1964 CONTINUE                                                          18039924
      IF(BETA-2.0)6015,6015,6002                                        18030411
 6002 READ TAPE 5,((PHIF2(I,J),I = 1,IMAX),J = 1,JMAX)                  18030413
      READ TAPE 5,((PHIS2(I,J),I = 1,IMAX),J = 1,JMAX)                  18030415
      REWIND 5                                                          18030417
      READ TAPE 6,((PHIF3(I,J),I = 1,IMAX),J = 1,JMAX)                  18030419
      READ TAPE 6,((PHIS3(I,J),I = 1,IMAX),J = 1,JMAX)                  18030421
      REWIND 6                                                          18030423
```

```
      TEMP1 = 0.0                                                       18030501
      TEMP2 = 0.0                                                       18030503
      TEMP3 = 0.0                                                       18030505
      TEMP4 = 0.0                                                       18030507
 6003 DO 6013 I = 2,LIM1                                                18030509
      DO 6012 J = 2,LIM2                                                18030511
      TEMPC1 = ABSF(PHIF1(I,J)-PHIF2(I,J))                              18030513
 6004 IF(TEMPC1-TEMP1)6006,6005,6005                                    18030515
 6005 TEMP1 = TEMPC1                                                    18030517
 6006 TEMPC2 = ABSF(PHIF2(I,J)-PHIF3(I,J))                              18030519
      IF(TEMPC2-TEMP2)6008,6007,6007                                    18030521
 6007 TEMP2 = TEMPC2                                                    18030524
 6008 TEMPC3 = ABSF(PHIS1(I,J)-PHIS2(I,J))                              18030601
      IF(TEMPC3-TEMP3)6010,6009,6009                                    18030603
 6009 TEMP3 = TEMPC3                                                    18030605
 6010 TEMPC4 = ABSF(PHIS2(I,J)-PHIS3(I,J))                              18030607
      IF(TEMPC4-TEMP4)6012,6011,6011                                    18030609
 6011 TEMP4 = TEMPC4                                                    18030611
 6012 CONTINUE                                                          18030613
 6013 CONTINUE                                                          18030615
      BETAB1 = 2.0-2.0*SQRTF(1.0-SQRTF(TEMP1/TEMP2))                    18030617
      BETAB2 = 2.0-2.0*SQRTF(1.0-SQRTF(TEMP3/TEMP4))                    18030619
      GO TO 6021                                                        18030621
 6015 IF(BETA)6020,6016,6020                                            18030701
 6016 IF(IB)6017,100,100                                                18039901
  100 IF(IT)6017,6018,6018                                              18039903
 6017 XQQ = 2.0*FLOATF(LIM1)                                            18030705
      GO TO 6019                                                        18030706
 6018 XQQ = FLOATF(LIM1)                                                18030707
 6019 XPP = FLOATF(LIM2)                                                18030709
      BETAB1 = 2.0-1.414214*SQRTF((3.141593/XPP)**2                     18030711
     1+(2.405/XQQ)**2)                                                  18030713
      BETAB2 = BETAB1                                                   18030715
      GO TO 6021                                                        18030717
 6020 BETAB1 = BETA                                                     18030801
      BETAB2 = BETA                                                     18030803
 6021 PRINT 6022,BETAB1,BETAB2                                          18030805
 6022 FORMAT(10H0 BETAF = 1PE10.3,13H      BETAS = E10.3//////)        18039907
 6023 IF(BETAB1-2.0)6024,6024,6025                                      18030809
 6024 IF(BETAB1-1.0)6025,6026,6026                                      18030811
 6025 BETAB1 = 1.0                                                      18030813
 6026 IF(BETAB2-2.0)6027,6027,6028                                      18030815
 6027 IF(BETAB2-1.0)6028,6029,6029                                      18030817
 6028 BETAB2 = 1.0                                                      18030819
 6029 RETURN                                                            18030821
      END(0,1,0,0,1)                                                    18030823
```

```
CSOUR SUB      EQUIPOISE SOUR SUB - 100                                18030401
      SUBROUTINE SOUR                                                  18030403
      DIMENSION A1(25,25),A2(25,25),A3(25,25),A4(25,25),               18030105
     1A5(25,25),A6(25,25),A7(25,25),B1(25,25),B2(25,25),               18030107
     2B3(25,25),B4(25,25),B5(25,25),B6(25,25),                         18030109
     3PHIF1(25,25),PHIF2(25,25),PHIF3(25,25),PHIFEX(25,25),            18030111
     4PHIS1(25,25),PHIS2(25,25),PHIS3(25,25 ),PHISEX(25,25),           18030113
     5DELR(25),DELZ(25),R(25),JCL(25),ELR(25),IRO(25),                 18030115
     6ELZ(25),HOL(12),NCC(10)                                          18039901
      COMMON A1,A2,A3,A4,A5,A6,B1,B2,B3,B4,B5,B6,VERGL,VERGF,HOL,NCC,  18039903
     1A7,PHIF1,PHIF2,PHIF3,PHIFEX,PHIS1,PHIS2,PHIS3,                   18030203
     2PHISEX,DELR,DELZ,R,IMAX,JMAX,NORI,NORJ,NREG,NDELR,NDELZ,         18030205
     3MK,LAD,ITOP,IRIT,IBOT,PHIT1,PHIT2,PHIR1,PHIR2,PHIB1,PHIB2,       18030207
     4EPI,BETA,JCL,ELR,IRO,ELZ,IRO1,IRO2,JCL1,JCL2,D1,D2,SIG1,         18030209
     5SIG2,SFNU1,SFNU2,PROB,PHIK1,PHIK2,IT,IR,IB,ITC,IBC,LIM1,LIM2,    18030211
     6LIMI1,LIMI2,LIMJ1,LIMJ2,TEMP1,TEMP2,TEMP3,TEMP4,TEMP5,           18030213
     7TEMP6,TEMP7,TEMP8,IEND,NIT,XLAMDA,NCELL,BETAB1,SUMN1,            18030215
     8SUMN2,ILO,JLO,IHI,JHI,VERG,PHINOR,KEXT1,KEXT2,BETAB2,            18030217
     9XMULT,ABF,ABS,STL,SBL,SRL,PRODF,PRODS,FTL,FBL,FRL                18030219
      EQUIVALENCE (A1(1),B1(1),PHIF2(1)),(A2(1),B2(1),PHIF3(1)),       18030301
     1(A3(1),B3(1),PHIFEX(1)),(A4(1),B4(1),PHIS2(1)),                  18030303
     2(A5(1),B5(1),PHIS3(1)),(A6(1),B6(1),PHISEX(1)),                  18030305
     3(PHIF1(1),DELR(1)), (PHIF1(26),DELZ(1)),(PHIF1(51),R(1)),        18030307
     4(PHIF1(76),JCL(1)),(PHIF1(101),IRO(1)),(PHIF1(126),ELR(1)),      18030309
     5(PHIF1(151),ELZ(1))                                              18039905
  100 DO 101 I = 1,IMAX                                                18030405
      DO 101 J = 1,JMAX                                                18030407
      A1(I,J) = 0.0                                                    18030409
      A2(I,J) = 0.0                                                    18030411
      A3(I,J) = 0.0                                                    18030413
  101 A4(I,J) = 0.0                                                    18030415
  102 DO 110 M = 1,NREG                                                18030417
      READ TAPE 2,IRO1,IRO2,JCL1,JCL2,D1,D2,SIG1,SIG2,                 18030419
     1SFNU1,SFNU2,PROB,PHIK1,PHIK2                                     18030421
      LIMI1 = IRO1+1                                                   18030423
      LIMI2 = IRO2-1                                                   18030425
      LIMJ1 = JCL1+1                                                   18030501
      LIMJ2 = JCL2-1                                                   18030503
      IF(IRO2-IRO1-1)106,106,103                                       18030505
  103 IF(JCL2-JCL1-1)106,106,104                                       18030507
  104 DO 105 I = LIMI1,LIMI2                                           18030509
      DO 105 J = LIMJ1,LIMJ2                                           18030511
      A1(I,J) = SFNU1*PHIF1(I,J)+SFNU2*PHIS1(I,J)                      18039901
      A2(I,J) = A1(I,J)                                                18030515
      A3(I,J) = A1(I,J)                                                18030517
  105 A4(I,J) = A1(I,J)                                                18030519
  106 IF(LIMJ2-LIMJ1)111,107,107                                       18030601
  107 DO 108 J = LIMJ1,LIMJ2                                           18030603
      A3(IRO1,J) = SFNU1*PHIF1(IRO1,J)+SFNU2*PHIS1(IRO1,J)             18030605
      A4(IRO1,J) = A3(IRO1,J)                                          18030607
      A1(IRO2,J) = SFNU1*PHIF1(IRO2,J)+SFNU2*PHIS1(IRO2,J)             18030609
  108 A2(IRO2,J) = A1(IRO2,J)                                          18030611
  111 IF(LIMI2-LIMI1)113,112,112                                       18030612
  112 DO 109 I = LIMI1,LIMI2                                           18030613
      A1(I,JCL1) = SFNU1*PHIF1(I,JCL1)+SFNU2*PHIS1(I,JCL1)             18030615
      A4(I,JCL1) = A1(I,JCL1)                                          18030617
```

```
      A2(I,JCL2) = SFNU1*PHIF1(I,JCL2)+SFNU2*PHIS1(I,JCL2)                18030619
  109 A3(I,JCL2) = A2(I,JCL2)                                             18030621
  113 A4(IRO1,JCL1) = SFNU1*PHIF1(IRO1,JCL1)+SFNU2*PHIS1(IRO1,JCL1)       18030701
      A3(IRO1,JCL2) = SFNU1*PHIF1(IRO1,JCL2)+SFNU2*PHIS1(IRO1,JCL2)       18030703
      A1(IRO2,JCL1) = SFNU1*PHIF1(IRO2,JCL1)+SFNU2*PHIS1(IRO2,JCL1)       18030705
  110 A2(IRO2,JCL2) = SFNU1*PHIF1(IRO2,JCL2)+SFNU2*PHIS1(IRO2,JCL2)       18030707
      REWIND 2                                                            18030709
      RETURN                                                              18030711
      END(0,1,0,0,1)                                                      18030713
```

```
COUT4 SUB      EQUIPOISE OUT4 SUB-100-1000                                18030401
      SUBROUTINE OUT4                                                     18030403
      DIMENSION A1(25,25),A2(25,25),A3(25,25),A4(25,25),                  18030105
     1A5(25,25),A6(25,25),A7(25,25),B1(25,25),B2(25,25),                  18030107
     2B3(25,25),B4(25,25),B5(25,25),B6(25,25),                            18030109
     3PHIF1(25,25),PHIF2(25,25),PHIF3(25,25),PHIFEX(25,25),               18030111
     4PHIS1(25,25),PHIS2(25,25),PHIS3(25,25 ),PHISEX(25,25),              18030113
     5DELR(25),DELZ(25),R(25),JCL(25),ELR(25),IRO(25),                    18030115
     6ELZ(25),HOL(12),NCC(10)                                             18039901
      COMMON A1,A2,A3,A4,A5,A6,B1,B2,B3,B4,B5,B6,VERGL,VERGF,HOL,NCC,     18039903
     1A7,PHIF1,PHIF2,PHIF3,PHIFEX,PHIS1,PHIS2,PHIS3,                      18030203
     2PHISEX,DELR,DELZ,R,IMAX,JMAX,NORI,NORJ,NREG,NDELR,NDELZ,            18030205
     3MK,LAD,ITOP,IRIT,IBOT,PHIT1,PHIT2,PHIR1,PHIR2,PHIB1,PHIB2,          18030207
     4EPI,BETA,JCL,ELR,IRO,ELZ,IRO1,IRO2,JCL1,JCL2,D1,D2,SIG1,            18030209
     5SIG2,SFNU1,SFNU2,PROB,PHIK1,PHIK2,IT,IR,IB,ITC,IBC,LIM1,LIM2,       18030211
     6LIMI1,LIMI2,LIMJ1,LIMJ2,TEMP1,TEMP2,TEMP3,TEMP4,TEMP5,              18030213
     7TEMP6,TEMP7,TEMP8,IEND,NIT,XLAMDA,NCELL,BETAB1,SUMN1,               18030215
     8SUMN2,ILO,JLO,IHI,JHI,VERG,PHINOR,KEXT1,KEXT2,BETAB2,               18030217
     9XMULT,ABF,ABS,STL,SBL,SRL,PRODF,PRODS,FTL,FBL,FRL                   18030219
      EQUIVALENCE (A1(1),B1(1),PHIF2(1)),(A2(1),B2(1),PHIF3(1)),          18030301
     1(A3(1),B3(1),PHIFEX(1)),(A4(1),B4(1),PHIS2(1)),                     18030303
     2(A5(1),B5(1),PHIS3(1)),(A6(1),B6(1),PHISEX(1)),                     18030305
     3(PHIF1(1),DELR(1)), (PHIF1(26),DELZ(1)),(PHIF1(51),R(1)),           18030307
     4(PHIF1(76),JCL(1)),(PHIF1(101),IRO(1)),(PHIF1(126),ELR(1)),         18030309
     5(PHIF1(151),ELZ(1))                                                 18039905
  100 WRITE OUTPUT TAPE 9,1000,(HOL(I),I=1,12)                            18030405
  101 NOOC = JMAX                                                         18030411
      MOOC = 0                                                            18030413
  905 NOOR = IMAX                                                         18030415
      MOOR = 0                                                            18030417
      WRITE OUTPUT TAPE 9,1001                                            18030419
      IF(NOOC-5)102,102,103                                               18030501
  102 LOOC = MOOC+1                                                       18030503
      MOOC = JMAX                                                         18030505
      SENSE LIGHT 1                                                       18030507
      GO TO 107                                                           18030509
  103 LOOC = MOOC+1                                                       18030511
      MOOC = MOOC+5                                                       18030513
      NOOC = NOOC-5                                                       18030515
  107 IF(NOOR-14)104,104,105                                              18030517
  104 LOOR = MOOR+1                                                       18030519
      MOOR = IMAX                                                         18030521
      SENSE LIGHT 2                                                       18030523
      GO TO 106                                                           18030525
  105 LOOR = MOOR+1                                                       18030601
      MOOR = MOOR+14                                                      18030603
      NOOR = NOOR-14                                                      18030605
  106 DO 120 J = LOOC,MOOC                                                18030607
  120 NCC(J) = J                                                          18030609
      WRITE OUTPUT TAPE 9,1002,(NCC(J),J=LOOC,MOOC)                       18030611
  108 DO 109 I = LOOR,MOOR                                                18030613
      WRITE OUTPUT TAPE 9,1003,I,((A2(I,J),A1(I,J)),J=LOOC,MOOC)          18030615
  109 WRITE OUTPUT TAPE 9,1004,((A3(I,J),A4(I,J)),J=LOOC,MOOC)
      IF(SENSE LIGHT 2)110,112                                            18030619
  110 IF(SENSE LIGHT 1)113,111                                            18030621
  111 WRITE OUTPUT TAPE 9,1005                                            18030623
```

```
      WRITE OUTPUT TAPE 9,1000,(HOL(I),I=1,12)                          18030625
      GO TO 905                                                         18030701
  112 WRITE OUTPUT TAPE 9,1005                                          18030703
      WRITE OUTPUT TAPE 9,1000,(HOL(I),I=1,12)                          18030705
      WRITE OUTPUT TAPE 9,1001                                          18030707
      GO TO 107                                                         18030709
 1000 FORMAT(12A6)                                                      18030801
 1001 FORMAT(12H0SOURCE(I,J))                                           18030803
 1002 FORMAT(1H0I15,4I22)                                               18030805
 1003 FORMAT(1H0I2,5(1PE12.3,E10.3))                                    18030807
 1004 FORMAT(3H   5(1PE12.3,E10.3))                                     18030809
 1005 FORMAT(1H1)                                                       18030811
  113 RETURN                                                            18030813
      END(0,1,0,0,1)                                                    18030815
```

```
CREST SUB     EQUIPOISE RESTRT SUB - 5000                                18030101
      SUBROUTINE RESTRT                                                  18030102
      DIMENSION A1(25,25),A2(25,25),A3(25,25),A4(25,25),                 18030105
     1A5(25,25),A6(25,25),A7(25,25),B1(25,25),B2(25,25),                 18030107
     2B3(25,25),B4(25,25),B5(25,25),B6(25,25),                           18030109
     3PHIF1(25,25),PHIF2(25,25),PHIF3(25,25),PHIFEX(25,25),              18030111
     4PHIS1(25,25),PHIS2(25,25),PHIS3(25,25 ),PHISEX(25,25),             18030113
     5DELR(25),DELZ(25),R(25),JCL(25),ELR(25),IRO(25),                   18030115
     6ELZ(25),HOL(12),NCC(10)                                            18039901
      COMMON A1,A2,A3,A4,A5,A6,B1,B2,B3,B4,B5,B6,VERGL,VERGF,HOL,NCC,    18039903
     1A7,PHIF1,PHIF2,PHIF3,PHIFEX,PHIS1,PHIS2,PHIS3,                     18030203
     2PHISEX,DELR,DELZ,R,IMAX,JMAX,NORI,NORJ,NREG,NDELR,NDELZ,           18030205
     3MK,LAD,ITOP,IRIT,IBOT,PHIT1,PHIT2,PHIR1,PHIR2,PHIB1,PHIB2,         18030207
     4EPI,BETA,JCL,ELR,IRO,ELZ,IRO1,IRO2,JCL1,JCL2,D1,D2,SIG1,           18030209
     5SIG2,SFNU1,SFNU2,PROB,PHIK1,PHIK2,IT,IR,IB,ITC,IBC,LIM1,LIM2,      18030211
     6LIMI1,LIMI2,LIMJ1,LIMJ2,TEMP1,TEMP2,TEMP3,TEMP4,TEMP5,             18030213
     7TEMP6,TEMP7,TEMP8,IEND,NIT,XLAMDA,NCELL,BETAB1,SUMN1,              18030215
     8SUMN2,ILO,JLO,IHI,JHI,VERG,PHINOR,KEXT1,KEXT2,BETAB2,              18030217
     9XMULT,ABF,ABS,STL,SBL,SRL,PRODF,PRODS,FTL,FBL,FRL                  18030219
      EQUIVALENCE (A1(1),B1(1),PHIF2(1)),(A2(1),B2(1),PHIF3(1)),         18030301
     1(A3(1),B3(1),PHIFEX(1)),(A4(1),B4(1),PHIS2(1)),                    18030303
     2(A5(1),B5(1),PHIS3(1)),(A6(1),B6(1),PHISEX(1)),                    18030305
     3(PHIF1(1),DELR(1)), (PHIF1(26),DELZ(1)),(PHIF1(51),R(1)),          18030307
     4(PHIF1(76),JCL(1)),(PHIF1(101),IRO(1)),(PHIF1(126),ELR(1)),        18030309
     5(PHIF1(151),ELZ(1))                                                18039905
 5000 READ TAPE 5,((PHIF1(I,J),I = 1,IMAX),J = 1,JMAX)                   18030401
      READ TAPE 5,((PHIS1(I,J),I = 1,IMAX),J = 1,JMAX)                   18030403
      REWIND 5                                                           18030405
      READ TAPE 4,A1
      READ TAPE 4,A2
      READ TAPE 4,A3
      READ TAPE 4,A4
      READ TAPE 4,A5
      READ TAPE 4,A6
      WRITE DRUM 1,0000,A1                                               18030501
      WRITE DRUM 1,0680,A2                                               18030503
      WRITE DRUM 1,1370,A3                                               18030505
      WRITE DRUM 2,0000,A4                                               18030507
      WRITE DRUM 2,0680,A5                                               18030509
      WRITE DRUM 2,1370,A6                                               18030511
      READ TAPE 4,B1
      READ TAPE 4,B2
      READ TAPE 4,B3
      READ TAPE 4,B4
      READ TAPE 4,B5
      READ TAPE 4,B6
      WRITE DRUM 3,0000,B1                                               18030601
      WRITE DRUM 3,0680,B2                                               18030603
      WRITE DRUM 3,1370,B3                                               18030605
      WRITE DRUM 4,0000,B4                                               18030607
      WRITE DRUM 4,0680,B5                                               18030609
      WRITE DRUM 4,1370,B6                                               18030611
      REWIND 4                                                           18030612
      RETURN                                                             18030613
      END(0,1,0,0,1)                                                     18030615
```

```
SUBINN REM
       FUL                      PROGRAM CARD
       MZE 0,0,4                9L
       PZE 0                    9R
       PZE ONE+2                8L
       PZE                      8R NO. OF LAST COMMON CELL
       BCD 1SUBINN              7L NAME OF ROUTINE
       PZE SUM                  7R
       ORG 0
       REL
       HTR
       HTR
       HTR
 SUM   SXD SUM-3,1
       SXD SUM-2,2
       SXD SUM-1,4
       CLA 1,4                  GET LOC OF SUMN 1
       STA A1+3
       CLA 2,4                  GET LOC OF LOC1
       STA *+1
       CLA 0                    GET LOC 1
       ARS 18                   SHIFT TO ADDRESS
       STA A1
       ADD ONE
       STA A1-1
       CLA 3,4                  GET LOC OF INTEGER
       STA *+1
       CLA 0                    GET INTEGER
       SUB ONE+1
       STD A1+2
       LXD ONE+1,1
       CAL 0,1
 A1    ACL 0,1                  CALCULATE CHECK SUM
       TXI *+1,1,1
       TXL A1,1,0
       SLW 0                    STORE CHECK SUM
       LXD SUM-3,1
       LXD SUM-2,2
       LXD SUM-1,4
       TRA 4,4                  RETURN
 ONE   OCT 1,1000000
       END 0
```

```
SUBOUT REM
       FUL                      PROGRAM CARD
       MZE 0,0,4                9L
       PZE 0                    9R
       PZE ONE+4                8L
       PZE                      8R NO. OF LAST COMMON CELL
       BCD 1SUBOUT              7L NAME OF ROUTINE
       PZE SUM                  7R
       ORG 0
       REL
       HTR
       HTR
       HTR
 SUM   SXD SUM-3,1
       SXD SUM-2,2
       SXD SUM-1,4
       CLA 1,4                  GET LOC OF SUMN 1
       STA A1+4
       CLA 2,4                  GET LOC OF LOC1
       STA *+1
       CLA 0                    GET LOC 1
       ARS 18                   SHIFT TO ADDRESS
       STA A1
       ADD ONE
       STA A1-1
       CLA 3,4                  GET LOC OF INTEGER
       STA *+1
       CLA 0                    GET INTEGER
       SUB ONE+1
       STD A1+2
       LXD ONE+1,1
       CAL 0,1
 A1    ACL 0,1                  CALCULATE CHECK SUM
       TXI *+1,1,1
       TXL A1,1,0
       SLW ONE+3
       CLA 0
       SUB ONE+3
       TZE RETURN
       SLN 1
RETURN LXD SUM-3,1
       LXD SUM-2,2
       LXD SUM-1,4
       TRA 4,4                  RETURN
 ONE   OCT 1,1000000
       END 0
```

REFERENCES

(1) G. G. Bilodean *et al.*, *PDQ, an IBM-704 Code to Solve the Two-Dimensional Few-Group Neutron-Diffusion Equations*, WAPD-TM-70 (August 1957).

(2) E. L. Wachspress, *CURE: A Generalized Two-Space Dimension Multigroup Coding for the IBM-704*, KAPL-1724 (Apr. 30, 1957).

(3) S. P. Frankel, "Convergence Rates of Iterative Treatments of Partial Differential Equations," *Mathematical Tables and Other Aids to Computation* 4, 65–75 (1950).

(4) F. B. Hildebrand, *Introduction to Numerical Analysis*, p 445, McGraw-Hill, New York, 1956.

(5) R. Tabory, Cie. IBM France, letter to D. C. Cashman, IBM Corp., New York; subject: PF PROG, SHARE Distribution No. 734, Paris, July 16, 1959.

INTERNAL DISTRIBUTION

1. V. E. Anderson (K-25)
2. S. E. Beall
3. L. L. Bennett
4. D. S. Billington
5. A. L. Boch
6. E. G. Bohlmann
7. C. E. Center (K-25)
8. R. H. Chapman
9. R. A. Charpie
10. R. D. Cheverton
11. R. S. Cockreham
12. H. C. Claiborne
13. F. L. Culler
14. L. B. Emlet (K-25)
15. D. E. Ferguson
16–20. T. B. Fowler
21. W. R. Gall
22. J. P. Gill
23. W. R. Grimes
24. E. E. Gross
25. P. N. Haubenreich
26. J. W. Hill
27. H. W. Hoffman
28. A. S. Householder
29. S. Jaye
30. W. H. Jordan
31. P. R. Kasten
32. G. W. Keilholtz
33. C. P. Keim
34. M. T. Kelley
35. J. A. Lane
36. C. G. Lawson
37. M. P. Lietzke
38. S. C. Lind
39. R. S. Livingston
40. R. A. Lorenz
41. M. I. Lundin
42. R. N. Lyon
43. H. F. McDuffie
44. H. G. MacPherson
45. B. Maskowitz (K-25)
46. K. Z. Morgan
47. J. P. Murray (Y-12)
48. M. L. Nelson
49. C. W. Nestor
50. L. F. Parsly, Jr.
51. F. N. Peebles
52. A. M. Perry
53. D. Phillips
54. P. H. Pitkanen
55. A. Preskitt
56. B. E. Prince
57. W. D. Reel
58. P. M. Reyling
59. D. M. Richardson
60. R. C. Robertson
61. M. W. Rosenthal
62. D. Scott, Jr.
63. C. H. Secoy
64. E. D. Shipley
65. E. G. Silver
66. M. J. Skinner
67. A. H. Snell
68. I. Spiewak
69. J. A. Swartout
70. E. H. Taylor
71. D. G. Thomas
72–76. M. Tobias
77. W. E. Unger
78. D. R. Vondy
79. A. M. Weinberg
80. C. E. Winters
81–82. Reactor Experimental Engineering Library
83. HRP Director's Office, Rm. 259, Bldg. 9204-1
84–85. Central Research Library
86–87. ORNL – Y-12 Technical Library, Document Reference Section
88–107. Laboratory Records Department
108. Laboratory Records, ORNL R.C.

EXTERNAL DISTRIBUTION

109. W. Sangren, General Atomics, San Diego
110. E. L. Wachspress, Knolls Atomic Power Laboratory
111. W. Cartmell, System Analysis and Computation, IBM, Owego, New York
112. D. Jacobson, Argonne National Laboratory
113. D. H. Groelsema, AEC, Washington
114–116. Westinghouse Electric Corporation, Bettis Plant, Pittsburgh, Pa. (1 copy each to W. R. Cadwell, B. H. Mount, and R. S. Varga)
117. Division of Research and Development, AEC, ORO
118–727. Given distribution as shown in TID-4500 (15th ed.) under Physics and Mathematics category (75 copies – OTS)