MARTIN MARIETTA ENERGY SYSTEMS LIBRARIES

3 4456 0361530 9

DOCUMENT COLLECTION

ORNL-2987
UC-4 - Chemistry-General

COULOMETRIC DETERMINATION OF URANIUM IN POWER-REACTOR-FUEL-DISSOLVER SOLUTIONS

B. B. Hobbs

CENTRAL RESEARCH LIBRARY
DOCUMENT COLLECTION
LIBRARY LOAN COPY
DO NOT TRANSFER TO ANOTHER PERSON
If you wish someone else to see this document, send in name with document and the library will arrange a loan.

OAK RIDGE NATIONAL LABORATORY
operated by
UNION CARBIDE CORPORATION
for the
U.S. ATOMIC ENERGY COMMISSION

Printed in USA. Price $0.50. Available from the
Office of Technical Services
Department of Commerce
Washington 25, D.C.

LEGAL NOTICE

This report was prepared as an account of Government sponsored work. Neither the United States, nor the Commission, nor any person acting on behalf of the Commission:

A. Makes any warranty or representation, expressed or implied, with respect to the accuracy, completeness, or usefulness of the information contained in this report, or that the use of any information, apparatus, method, or process disclosed in this report may not infringe privately owned rights; or

B. Assumes any liabilities with respect to the use of, or for damages resulting from the use of any information, apparatus, method, or process disclosed in this report.

As used in the above, "person acting on behalf of the Commission" includes any employee or contractor of the Commission, or employee of such contractor, to the extent that such employee or contractor of the Commission, or employee of such contractor prepares, disseminates, or provides access to, any information pursuant to his employment or contract with the Commission, or his employment with such contractor.

ORNL-2987

Contract No. W-7405-eng-26

Analytical Chemistry Division

COULOMETRIC DETERMINATION OF URANIUM IN POWER-REACTOR-FUEL-DISSOLVER SOLUTIONS

B. B. Hobbs

DATE ISSUED

NOV 18 1960

OAK RIDGE NATIONAL LABORATORY
Oak Ridge, Tennessee
operated by
UNION CARBIDE CORPORATION
for the
U.S. ATOMIC ENERGY COMMISSION

MARTIN MARIETTA ENERGY SYSTEMS LIBRARIES

3 4456 0361530 9

TABLE OF CONTENTS

0.0 ABSTRACT

1.0 INTRODUCTION

- 1.1 Purpose
- 1.2 Scope

2.0 INSTRUMENTATION AND APPARATUS

- 2.1 Titration Cell Assembly
- 2.2 Extraction Vessel
- 2.3 Pipet Assembly
- 2.4 pH Meter
- 2.5 Coulometer

3.0 EVALUATION OF THE METHOD

- 3.1 Dissolver Solutions
- 3.2 Performance of the Equipment
- 3.3 Procedure for Analysis

4.0 DATA

- 4.1 Standardization of Equipment
- 4.2 Synthetic Dissolver Solutions
- 4.3 Analysis of Radioactive APPR Coupons

5.0 DISCUSSION

6.0 CONCLUSIONS

7.0 ACKNOWLEDGEMENTS

8.0 REFERENCES

0.0 ABSTRACT

Radioactive and nonradioactive solutions, similar to those to be found in power-reactor-fuel reprocessing, were analyzed for uranium. The procedure consisted in three main steps; a separation of the uranium from the dissolver solutions diverse ions by means of tri(iso-octyl)amine, an acid stripping of the uranium from the organic layer, and a quantitative reduction of uranium(VI) by use of a controlled-potential coulometer.

The results obtained indicate that power-reactor-fuel-dissolver solutions can be analyzed for uranium to within ±1%.

1.0 INTRODUCTION

1.1 Purpose

The purpose of this investigation was to provide a method for the precise, accurate, and rapid determination of uranium in power-reactor-fuel-dissolver solutions. Because of the radioactive nature of these solutions, this method also had to be both adaptable to the remote handling of materials and apparatus in the High-Radiation-Level Analytical Facility (HRLAF) and insensitive to the high levels of radiation of the dissolver solutions.

1.2 Scope

This report deals primarily with the adaptation to the remotely controlled analysis of radioactive solutions, of a method[4] for the determination of uranium in power-reactor-fuel-dissolver solutions. The method of analysis consists essentially in a solvent extraction of uranium,[1] an acid stripping of the uranium from the organic layer, the addition of ascorbic acid as a reducing agent for interfering contaminants and as a complexing agent for uranium,[2] and a quantitative reduction of the uranium(VI) by use of a controlled-potential coulometer.[3]

The development of the method and the results of its application to nonirradiated solutions have been previously reported[4] and will not be discussed herein.

2.0 INSTRUMENTATION AND APPARATUS

Sketches of the equipment used inside the cell of the HRLAF are shown in Figs. 1 and 2.

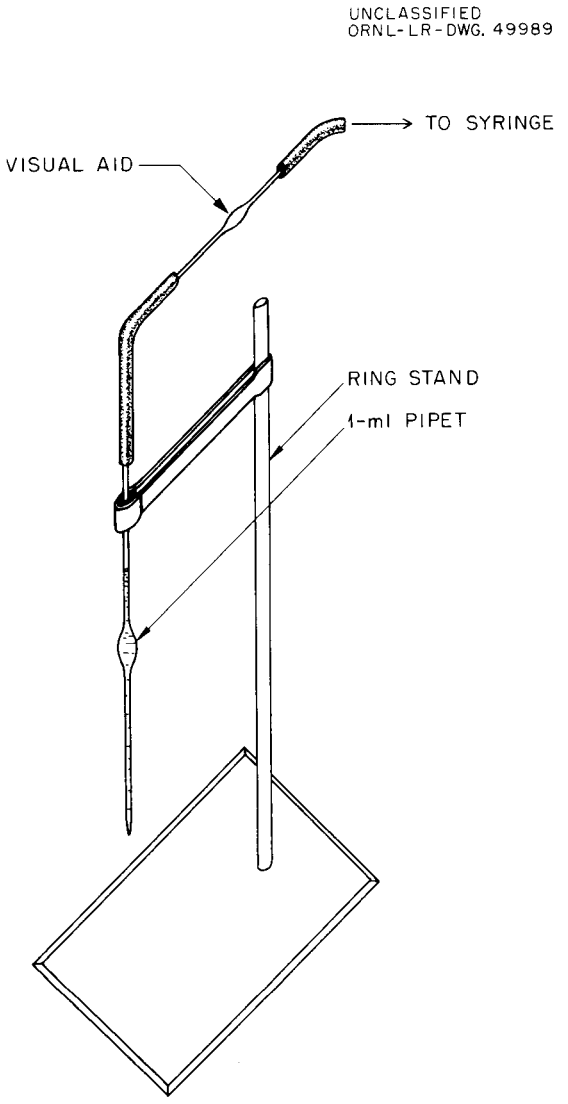

Figure 1. Remote Pipeting Apparatus.

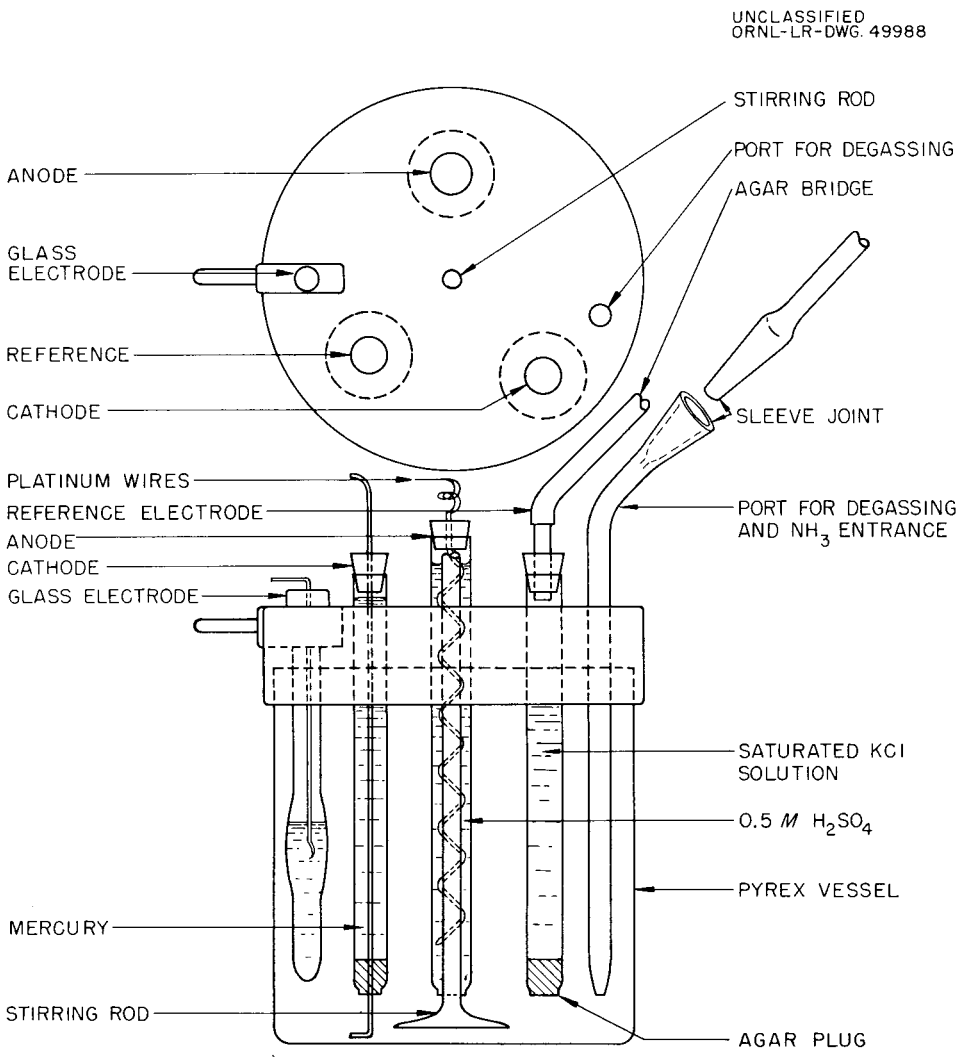

Figure 2. Coulometer Cell (Top and Front Views).

2.1 Titration Cell Assembly

This is an assembly very similar to the ones used previously for radioactive work.[5] It consists mainly of a flat-bottom, glass cell and a cell cap to hold in place the electrical connections and the electrodes. The cell assembly used also included a miniature glass electrode and a ground-glass sleeve joint in the degassing line.

2.2 Extraction Vessel

The extraction vessel is made of 40-mm diameter glass tubing and a three-way stopcock. It is raised and lowered beneath a fixed stirring motor. In the lowered position, it can be removed from the holder.

2.3 Pipet Assembly

The pipet assembly is a 1-ml volumetric pipet mounted on a ring stand by means of a rubber stopper. Rubber tubing is connected to the stopper and is laid through an access hole to the outside. By means of a hypodermic syringe, the sample can be drawn up into the pipet or drained from it.

2.4 pH Meter

A model G pH meter is incorporated into the electrode system by means of electrical connections to the glass and reference electrodes.

2.5 Coulometer

The ORNL Mark III controlled potential coulometer was used for the titrations.

3.0 EVALUATION OF THE METHOD

3.1 Dissolver Solutions

The radioactive solutions used in the data collection were not representative, with respect to concentrations and acidity, of the dissolver

solutions expected in the reprocessing of power-reactor fuels. The solutions used were dissolutions, made by the Pilot Plant Analytical Control Unit, of irradiated Army Package Power Reactor (APPR) type fuel coupons. The radioactivity of each of these coupons was estimated to exceed 100 r. The coupons themselves were taken from two fuel elements pulled from the APPR at two-thirds of the core life. Estimates of the fuel burn-up in the coupons ranged from 2 to 35%; the coupons were cooled approximately one year before they were cut.

The concentrations of uranium and stainless steel were different for each solution because the weight and the uranium content were different for each coupon. Each of the solutions was diluted to a final volume of 200 ml and had an acid concentration of approximately 4.0 M. For these reasons, the uranium concentration of these solutions varied from 0.6 to 2.0 mg/ml.

Typical dissolver solutions expected in the reprocessing of reactor fuel will have a uranium concentration of approximately 5.0 mg/ml, a stainless steel concentration of 70 mg/ml, and an acid concentration of 3 to 4 M. Consequently, in order to have a more nearly representative dissolver solution, three of the irradiated APPR coupon solutions were concentrated inside the HRLAF cell prior to analysis until approximate typical concentrations were attained.

Each of the coupon solutions was analyzed by the Pilot Plant Control Unit. The results of these analysis gave reference values against which the results determined by this method could be compared. The method of analysis used by the Pilot Plant Control Unit was:

1. A separation of the uranium from the dissolver solution using hexone as the extractant.

2. Evaporation of an aliquot of the hexone.

3. An ammonium thiocyanate spectrophotometric determination[6] of uranium in the residue.

3.2 Performance of the Equipment

Generally speaking, the coulometric cell and the extraction apparatus performed well. However, the pipeting apparatus was not ideal equipment for precision pipeting. The aqua regia content of the samples prevented the use of the ORNL model Q-1348 remotely controlled pipettor. Instead, a 1-ml volumetric pipet was used to measure the test aliquot. The extent of drainage of the pipet would sometimes vary, and frequent calibration of it was necessary.

A corrosion resistant pipet similar to the ORNL model Q-1348 is presently under test and is expected to improve the accuracy and precision of obtaining a sample aliquot.

3.3 Procedure for Analysis

The procedure used for the determination of uranium in stainless steel (APPR type) dissolver solutions was as follows:

1. Pipet 1-ml aliquot into a solution of 5 ml monobasic aluminum nitrate containing 5 drops of a 5% aqueous solution of hydroxylamine hydrochloride.

2. Stir the solution briefly.

3. Add 5 ml of a 5% solution of tri(iso-octyl)amine in xylene and extract the uranium for five minutes.

4. Separate the phases; then discard the aqueous phase.

5. Strip the uranium from the organic phase with 5 ml of a 0.05 M $HClO_4$ - 0.5 M H_2SO_4 solution and drain the aqueous phase into the coulometric cell.

6. Repeat Step 5.

7. Add 6 drops of a saturated aqueous solution of ascorbic acid to the coulometric cell.

8. Add the mercury cathode.

9. With the coulometric cell in position for titration, adjust the pH of the test solution to 4.0 ± 0.5 by adding NH_4OH dropwise.

10. Deaerate the solution and then titrate the uranium at a controlled potential of -0.400 volt vs the S.C.E.

All volumetric measurements, except that of the test aliquot, were made outside the HRLAF cell; the measured volumes were then transferred into the cell by the use of 30-ml glass bottles.

4.0 DATA

4.1 Standardization of Equipment

In order to obtain a basis for the precision and accuracy to be expected from the remote handling of the equipment and using the method described, a uranyl nitrate standard solution was used for calibration.

This uranium standard was made by dissolving a weighed amount of uranium metal, of known purity. After the solution was made to a known volume, the uranium concentration of it was verified by a potentiometric analysis using ferric sulfate as the titrant.[7]

1. For pipeting and general functioning of the cell assembly, a 1-ml aliquot was pipeted directly into 10 ml of 0.5 M H_2SO_4 as the supporting electrolyte. The solution was deaerated, and the uranium was reduced at -0.250 volt vs the S.C.E.

Average results of 26 determinations:

Uranium, mg		
Taken	Found	Error
3.980	4.001	+0.5%

Standard deviation = 0.4%

Limit of error = 0.8%

2. For all phases of remote handling, a 1-ml aliquot was carried through the procedure given in Sec. 3.3 above.

Average results of 15 determinations:

Uranium, mg		
Taken	Found	Error
3.980	3.947	-0.8%

Standard deviation = 0.5%

Limit of error = 1.0%

4.2 Synthetic Dissolver Solutions

Two uranium-containing stainless steel solutions were analyzed. The compositions of these solutions, in uranium and stainless steel, were made to correlate with those solutions of APPR coupon material (Sec. 3.1); they were:

	Uranium, mg/ml	304 Stainless Steel, mg/ml	Acid, M
MC-20	0.658	10	3.8
JC-25	0.863	10	3.8

The uranium content was again determined by the method described for standards (Sec. 4.1).

In order to make these solutions more nearly representative of a typical dissolver solution, they were concentrated outside the HRLAF cell, and the final solution was analyzed inside the cell; the procedure given (Sec. 3.3) was followed. Results of these analyses are given in Table 1.

4.3 Analysis of Radioactive APPR Coupons

Five radioactive APPR coupon solutions were used to investigate the radiation effects and adaptability of the procedure and equipment to radioactive solutions. Because of the low concentration of uranium in these solutions, data are given on both the dilute and the concentrated solutions of two of the APPR coupon solutions, on the dilute solutions of two additional samples, and only on the concentrated solution of the remaining coupon solution. Where it is indicated that a solution was concentrated, this concentration was done inside the HRLAF cell.

For comparison, the results obtained by the Pilot Plant Control Unit (Sec. 3.1) are also given. Results of the analyses are given in Table 2.

5.0 DISCUSSION

The data presented in the preceeding section indicate that Power Reactor Fuels dissolved in aqua regia (DAREX), can be accurately analyzed by the method previously given. If the uranium concentration should happen to be greater than in the solutions that were analyzed, which seems probable, there is reason to believe that, percentage wise, accuracy and precision will improve.

In no instance of this particular investigation did there seem to be either a chemical or procedural failure. All cases of error greater than

Table 1. Results of Analysis of Synthetic Dissolver Solutions

Acid molarity of test solutions, 4 M

Volume of test aliquot, 1 ml

Test Solution	Volume of Test Solution, ml		Number of Test Aliquots	Uranium, mg		Error	Relative Standard Deviation	Limit of Error
	Initial	Final		Taken	Found			
MC-20	100	25	12	2.632	2.623	-0.3%	0.5%	1.0%
JC-25	25	10	8	2.158	2.167	+0.4%	0.3%	0.6%

Table 2. Results of Analysis of Radioactive APPR Coupons

Acid molarity of test solution of coupon, 4 M

Volume of test aliquot, 1 ml

Coupon Number	Coupon Weight, g	Vol. of Soln. of Coupon, ml Initial	Vol. of Soln. of Coupon, ml Final	No. of Test Aliquots Analyzed Coulometrically	Uranium Found in Test Aliquot (average), mg Spectrophotometric[a]	Uranium Found in Test Aliquot (average), mg Coulometric	Diff., %	Rel. Std. Dev., %[b]	Limit of Error, %[b]
40	2.9683	200	200	15	1.992	1.981	+0.6	0.5	1.0
40	2.9683	200	100	10	3.984	3.922	+1.6	0.5	1.0
94	1.7239	200	200	5	1.093	1.049	+4.1	0.5	1.0
94	1.7239	200	67	7	3.279	3.128	+4.6	0.3	0.6
52	2.6792	200	200	12	1.846	1.858	0.6	0.6	1.2
56	2.7161	200	200	8	1.636	1.667	-1.9	0.3	0.6
116	1.1097	200	100	12	1.596	1.564	+2.0	0.9	1.8

(a) Average of two determinations.

(b) For coulometric data only.

that presented in the data were traceable to either a mechanical failure in equipment, failure of an electrode, or error in remote handling. Improvement in the design of the remote equipment and development of better techniques for operating the remote equipment would improve the reliability of the system.

As for the rapidity of analysis, one hour is usually required for each complete determination.

Although the investigation was limited entirely to APPR type dissolver solutions, the data presented are helpful in predicting the accuracy and precision of the analysis of other types of radioactive dissolver solutions.

Table 3 shows the error previously obtained for the determination of uranium in several synthetic nonradioactive reactor-fuel-dissolver solutions. From these data and from the data obtained from the analysis of radioactive APPR type fuel an effort is made to predict the accuracy and precision that can be expected from the determination of uranium in these various types of fuel solutions.

As other types of radioactive dissolver solutions become available, it is planned to establish the accuracy and precision for the determination of their uranium content by the use of this method.

6.0 CONCLUSION

By use of the method described in this report, no reason can be forseen why power-reactor-dissolver solutions cannot be accurately analyzed for their uranium content. On an experimental basis, as discussed in this report, the

Table 3. Error Obtained for the Determination of Uranium in Synthetic Dissolver Solutions of Various Reactor Fuels

APPR Type Dissolver Solutions (DAREX)	Nonradioactive with Stainless Steel Contaminants		Nonradioactive with Stainless Steel and Cold Fission Product Contaminants		Remote Handling of Radioactive Material	
	Error	S.D.	Error	S.D.	Error	S.D.
	+0.05%	0.4%	+0.5%	0.9%	-0.5%	0.5%
CONED Type Dissolver Solutions (Dejacketed)	Nonradioactive		Nonradioactive with Cold Fission Products		*Remote Handling	
	Error	S.D.	Error	S.D.	Error	S.D.
	+0.2%	0.4%	-0.4%	0.5%	(<1.0%)	(<1.0%)
CONED Type Dissolver Solutions (DAREX)	Nonradioactive with Stainless Steel Contaminants		Nonradioactive with Stainless Steel and Cold Fission Product Contaminants		*Remote Handling	
	Error	S.D.	Error	S.D.	Error	S.D.
	+0.8%	1.0%	+1.0%	1.8%	(<2.0%)	(<2.0%)
Yankee Atomic Solutions (Dejacketed)	Nonradioactive		Nonradioactive with Cold Fission Products		*Remote Handling	
	Error	S.D.	Error	S.D.	Error	S.D.
	0	0.3%	-0.3%	0.6%	(<1.0%)	(<1.0%)
Yankee Atomic Solutions (DAREX)	Nonradioactive with Stainless Steel Contaminants		Nonradioactive with Stainless Steel and Cold Fission Product Contaminants		*Remote Handling	
	Error	S.D.	Error	S.D.	Error	S.D.
	+0.5%	0.3%	+0.5%	0.5%	(<1.0%)	(<1.0%)
Foreign Research Reactor Solutions	Nonradioactive		Nonradioactive with Cold Fission Products		*Remote Handling	
	Error	S.D.	Error	S.D.	Error	S.D.
	+0.1%	0.3%	-0.3%	0.6%	(<1.0%)	(<1.0%)

* Predicted. Based upon the results obtained from the remote handling of APPR type fuel.

results should generally be within ±1% of the true value. Perhaps on a more routine basis, results will not be as accurate, but as far as can be determined, the method described in this report offers the best combination of rapidity, accuracy, and precision.

7.0 ACKNOWLEDGEMENTS

The assistance in the work described in this report of R. Burns and C. C. Foust of the Pilot Plant Control Unit, of S. R. Dinsmore of the Reactor Analyses Laboratory, and of H. E. Zittel of the Thermal Breeder Reactor Projects Analytical Chemistry Laboratory has been greatly appreciated.

8.0 REFERENCES

1. Moore, F. L., "Liquid-Liquid Extraction of Uranium and Plutonium from Hydrochloric Acid Solutions with Tri(iso-octyl)amine," Anal. Chem. 30, 908 (1958).

2. Shinogaiwa, M., Murata, T., "Polarography of Uranium," Polarongurafic 5, 41 (1957), AEC-tr-31881.

3. Kelley, M. T., Jones, H. C., Fisher, D. J., "Electronic Controlled-Potential Coulometric Titrator," Anal. Chem. 31, 488 (1959).

4. Hobbs, B. B., "Coulometric Determination of Uranium in the Presence of Fission Products and Other Interfering Elements," ORNL CF-60-3-123.

5. Horton, A. D., Farrar, L. G., Hobbs, B. B., and Shults, W. D., "The Coulometric Titration of HRT Fuel," p. 95, TID-7568 (Pt. 2), Oct. 1, 1958.

6. Koskela, U., Lamb, C. E., "Uranium, Spectrophotometric Ammonium Thiocyanate Method," Method Nos. 1 219210 and 9 00719210 (11-12-53), ORNL Master Analytical Manual; TID-7015, Sec. 1.

7. Cooper, J. H., "Uranium, Potentiometric Ferric Sulfate Method," Method Nos. 1 219222 and 9 00719222 (8-3-53), ORNL Master Analytical Manual; TID-7015, Sec. 1.

ORNL-2987
UC-4 Chemistry-General
TID-4500 (15th ed.)

INTERNAL DISTRIBUTION

1. C. E. Center
2. Biology Library
3. Health Physics Library
4-5. Central Research Library
6. Reactor Experimental Engineering Library
7-26. Laboratory Records Department
27. Laboratory Records, ORNL R.C.
28. A. M. Weinberg
29. L. B. Emlet (K-25)
30. J. P. Murray (Y-12)
31. J. A. Swartout
32. E. H. Taylor
33. E. D. Shipley
34. M. L. Nelson
35. C. P. Keim
36. M. T. Kelley
37. P. M. Reyling
38. R. S. Cockreham
39. W. H. Jordan
40. F. L. Culler
41. S. C. Lind
42. A. H. Snell
43. A. Hollaender
44. K. Z. Morgan
45. T. A. Lincoln
46. A. S. Householder
47. R. S. Livingston
48. D. S. Billington
49. C. E. Winters
50. H. E. Seagren
51. D. Phillips
52. J. A. Lane
53. M. J. Skinner
54. J. M. Schreyer
55. G. E. Boyd
56. C. L. Burros
57. B. B. Hobbs
58. J. H. Cooper
59. L. T. Corbin
60. C. Feldman
61. D. J. Fisher
62. U. Koskela
63. W. R. Laing
64. C. E. Lamb
65. D. E. LaValle
66. G. W. Leddicotte
67. S. A. Reynolds
68. P. F. Thomason
69. T. E. Willmarth
70. G. R. Wilson
71. E. I. Wyatt
72. L. J. Brady
73. H. P. House
74. J. R. Lund
75. E. C. Lynn
76. O. Menis
77. A. S. Meyer, Jr.
78. C. D. Susano
79. C. K. Talbott
80. W. F. Vaughan
81. J. C. White
82. H. P. Raaen
83. J. A. Norris
84. D. L. Manning
85. T. C. Rains
86. A. E. Cameron
87. N. H. Furman (consultant)
88. D. N. Hume (consultant)
89. H. A. Laitinen (consultant)
90. C. E. Larson (consultant)
91. W. W. Meinke (consultant)
92. L. L. Merritt (consultant)
93. ORNL - Y-12 Technical Library, Document Reference Section

EXTERNAL DISTRIBUTION

94. Division of Research and Development, AEC, ORO
95-651. Given distribution as shown in TID-4500 (15th ed.) under Chemistry-General category (75 copies - OTS)