MARTIN MARIETTA ENERGY SYSTEMS LIBRARIES
3 4456 0361548 9

CENTRAL RESEARCH LIBRARY
DOCUMENT COLLECTION

ORNL-3008
UC-38 Equipment, Methods, and Techniques

# SLURRY FEED-PUMP DEVELOPMENT

E. C. Hise

CENTRAL RESEARCH LIBRARY
DOCUMENT COLLECTION
LIBRARY LOAN COPY
DO NOT TRANSFER TO ANOTHER PERSON
If you wish someone else to see this document, send in name with document and the library will arrange a loan.

OAK RIDGE NATIONAL LABORATORY
operated by
UNION CARBIDE CORPORATION
for the
U.S. ATOMIC ENERGY COMMISSION

Printed in USA. Price $0.50. Available from the

Office of Technical Services
Department of Commerce
Washington 25, D.C.

LEGAL NOTICE

This report was prepared as an account of Government sponsored work. Neither the United States, nor the Commission, nor any person acting on behalf of the Commission:

A. Makes any warranty or representation, expressed or implied, with respect to the accuracy, completeness, or usefulness of the information contained in this report, or that the use of any information, apparatus, method, or process disclosed in this report may not infringe privately owned rights; or

B. Assumes any liabilities with respect to the use of, or for damages resulting from the use of any information, apparatus, method, or process disclosed in this report.

As used in the above, "person acting on behalf of the Commission" includes any employee or contractor of the Commission, or employee of such contractor, to the extent that such employee or contractor of the Commission, or employee of such contractor prepares, disseminates, or provides access to, any information pursuant to his employment or contract with the Commission, or his employment with such contractor.

ORNL-3008
Equipment, Methods, and Techniques

Contract No. W-7405-eng-26

REACTOR EXPERIMENTAL ENGINEERING DIVISION

# SLURRY FEED-PUMP DEVELOPMENT

E. C. Hise

Date Issued

OCT 25 1960

OAK RIDGE NATIONAL LABORATORY
Oak Ridge, Tennessee
operated by
UNION CARBIDE CORPORATION
for the
U. S. ATOMIC ENERGY COMMISSION

MARTIN MARIETTA ENERGY SYSTEMS LIBRARIES
3 4456 0361548 9

CONTENTS

ABSTRACT ..... 1

INTRODUCTION ..... 1

DESCRIPTION OF EQUIPMENT AND PUMPS ..... 1

Modifications to Prevent Diaphragm Damage by Solids ..... 1

Check Valves ..... 3

Test Systems ..... 7

RESULTS ..... 7

CONCLUSIONS ..... 21

REFERENCES ..... 21

# SLURRY FEED-PUMP DEVELOPMENT

E. C. Hise

## ABSTRACT

A nuclear reactor utilizing a suspension of thorium or uranium oxide in water as the fertile or fissile material requires pumps capable of injecting several gallons per minute of a slurry that is 50% or more solids by weight into a high-pressure system at up to 2000 psi. This report describes the adaptation of the hydraulically driven metal-diaphragm pump to slurry service, the testing of such pumps, and the demonstration of at least four months of continuous operation of the pumps, check valves, and associated equipment.

## INTRODUCTION

A nuclear reactor utilizing a suspension of thorium or uranium oxides in water as the fertile or fissile material requires pumps capable of injecting up to several gallons per minute of a slurry that is 50% or more solids by weight into a high-pressure system at up to 2000 psi. The oxide particles are 1.5 to 3 μ in size, highly abrasive (Knoop 650 or Rockwell C-60), dense (s.g. = 10), and settle rapidly, making the slurry difficult to handle physically. After irradiation the slurry is highly radioactive, so that the pump must be absolutely leak-proof and contain no material that suffers radiation damage. Since the pump becomes contaminated, and therefore impossible to repair and difficult to replace, it is desirable that it have as long a service life as possible. The pressure-capacity range is best suited to a positive-displacement pump.

The Westinghouse PAR organization was investigating and testing a variety of hydraulically and mechanically driven plunger pumps. To broaden the scope and to use past development work,[1,2] it was decided to investigate adaptation of the hydraulically driven metal-diaphragm pump at ORNL. In its standard configuration, as shown in Fig. 1, it is unsuited to slurry service. Solids become entrapped between the diaphragm and the contour, shortening the diaphragm life, and the metal check-valve trim is rapidly eroded by the abrasive slurry. It was therefore necessary to develop a pump configuration suited to handling solids, and check valves capable of an acceptable life.

## DESCRIPTION OF EQUIPMENT AND PUMPS

### Modifications to Prevent Diaphragm Damage by Solids

The first approach to limiting diaphragm damage by solids was to reduce the amount of solids entering the diaphragm chamber and to provide as good

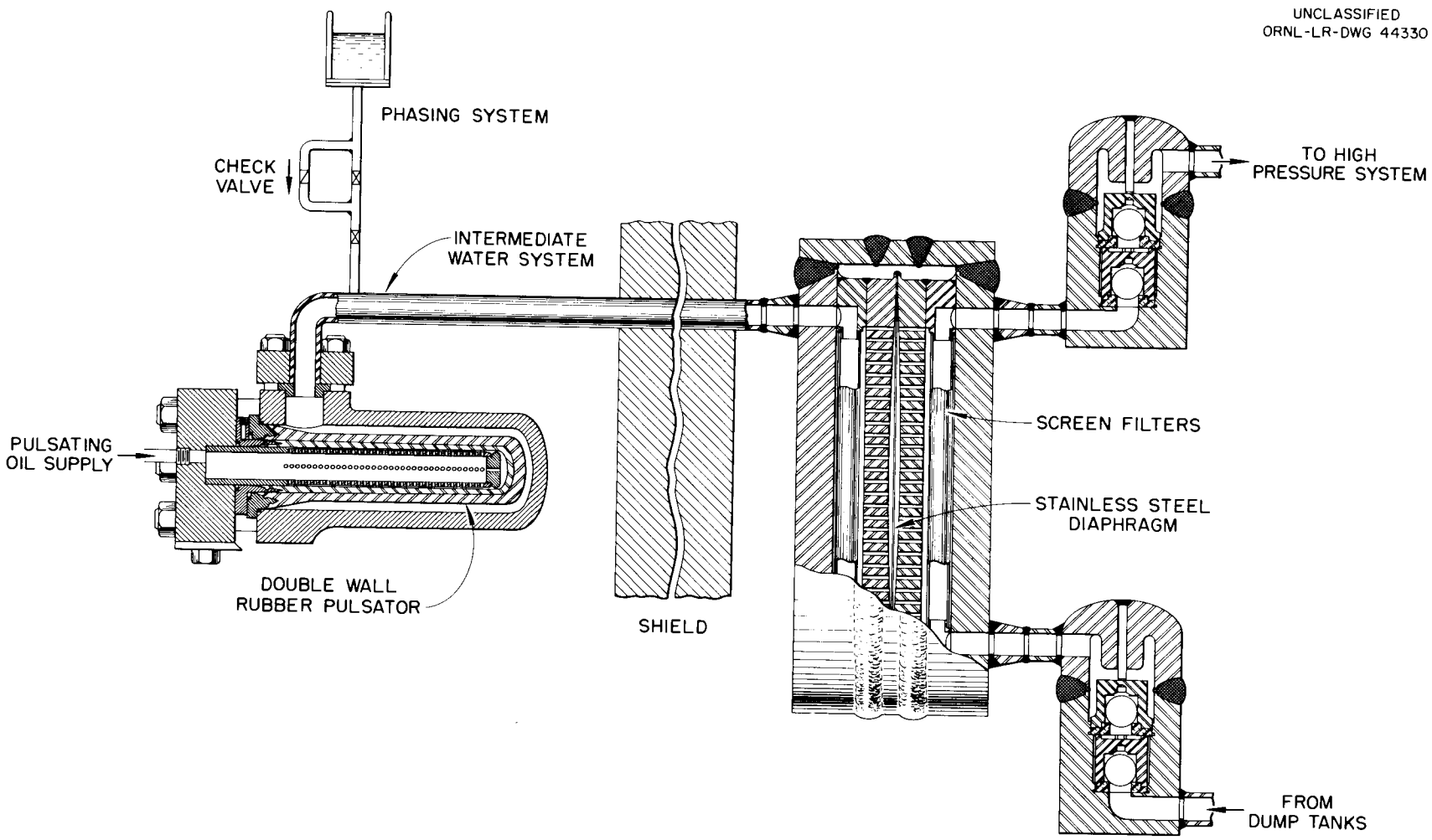


Fig. 1. Cross Section of Standard Metal-Diaphragm Pump.

a path as possible for the exit of the solids which did enter. In the HRE-2 solution pumps, the fluid flows from suction to discharge check valve through a vertical 1-in.-dia hole in the head. This passage communicates with the diaphragm chamber via the vertical rows of 1/8-in. holes (Fig. 2), so that liquid must flow from everywhere in the diaphragm chamber to this central band of holes to exit.

In the remote-leg slurry pump (Fig. 3), the fluid does not flow through the head. The check valves are located below the head, which is used to pulse the vertical column above the valves and cause the fluid to be pumped through the check valves. If the vertical column is properly sized with respect to the settling rate of the slurry, an interface forms in the vertical column so that the pump head operates in water while slurry is pumped through the check valves. The head is so constructed that the diaphragm chamber communicates with the remote leg by 1/8-in. holes spaced over the entire contour face rather than in a narrow vertical band. Therefore any solids that do enter may readily exit. A 20-mesh screen is interposed between the remote leg and the diaphragm chamber to keep out relatively large particles. This pump was originally set up to discharge at low pressure using different-diameter glass remote-legs 3 ft long to determine the conditions necessary to maintain a water-slurry interface below the head. On the basis of information thus obtained, it was converted to a high-pressure system and operated for long-term evaluation.

The second approach to preventing the entrapment of solids between the diaphragm and the contour was to eliminate the contour (Fig. 3). The single-contour head consists of the driving flange with a contoured face; the driving diaphragm; the intermediate flange with a flat face, a contoured face, and communicating holes; the pumping diaphragm; and the pumping flange with a simple recess and check valves. The driving diaphragm is operated between the contoured face of the driving flange and the flat face of the intermediate flange. It oscillates the coupling fluid in the intermediate flange and, in turn, drives the pumping diaphragm between the contour in the intermediate flange and its flat position, thus pumping the slurry through the recess of the pumping flange. Although the slurry moves through the pump, the pumping diaphragm is never pressed against a contour or surface on which there are solids. This type of head was constructed and operated with the remote leg as a duplex unit in the slurry feed-pump test loop.[3] A duplex unit of single-contour heads has been provided to the 300-SM loop and is providing satisfactory service to date. (The single-contour pump is commercially available from Pressure Products Industries, Inc., Hatboro, Pennsylvania.)

## Check Valves

The check valves that have been developed for solution pumps are not suited to slurry because the slurry quickly erodes the metal trim and also causes the balls to stick in their cages. Previous tests[4] evaluating possible trim materials ranging from gold to boron carbide indicated that resistance to erosion increased with hardness. An experimental check valve (Fig. 4) was designed to use replaceable ceramic trim and to provide nearly straight-through flow, close ball guiding by virtue of the spherical triangular segments into which the ball rises, and no close clearances to cause the ball to stick.

UNCLASSIFIED
PHOTO 42953

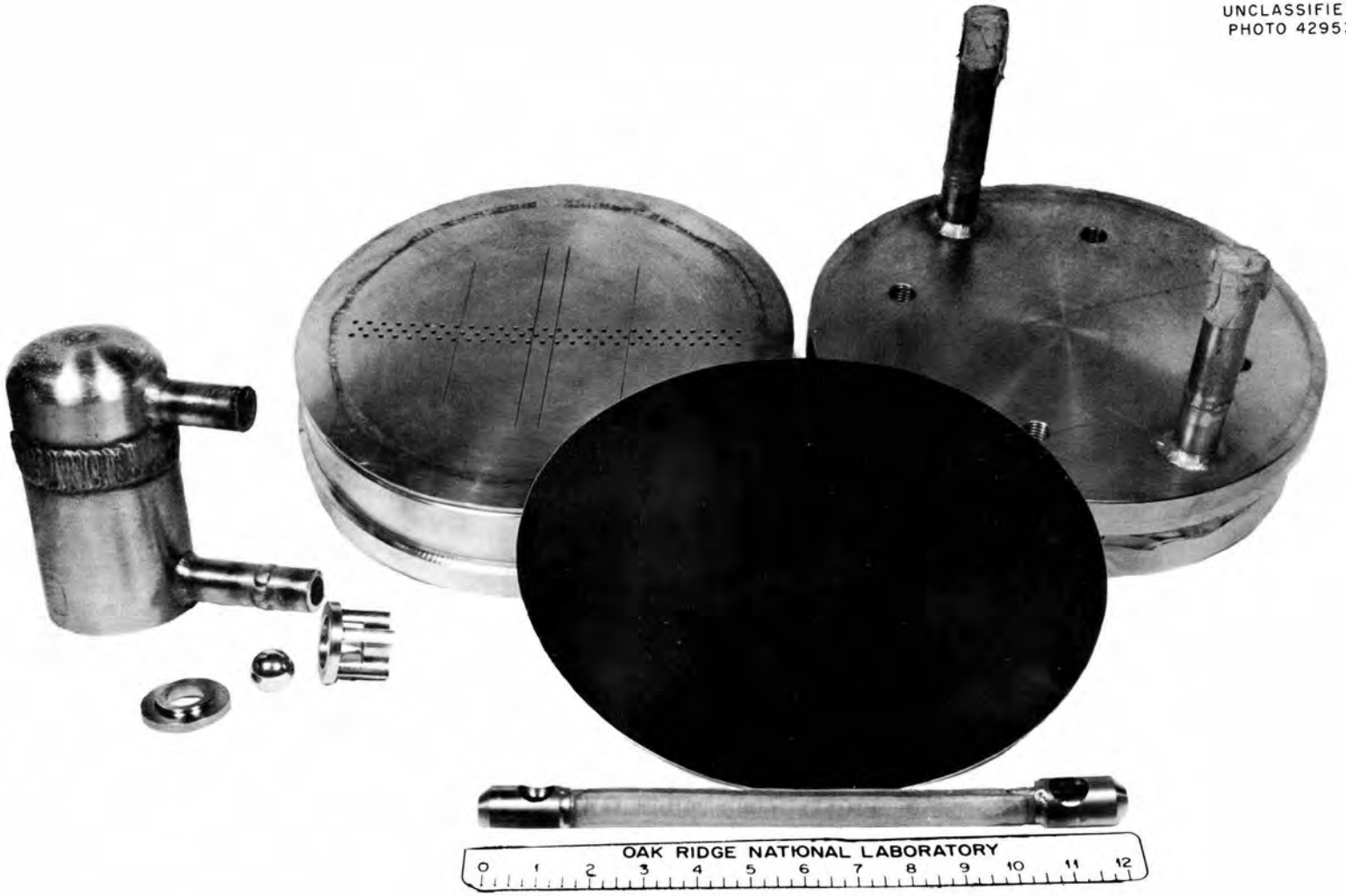


Fig. 2. Standard Metal-Diaphram Pump; Unassembled.

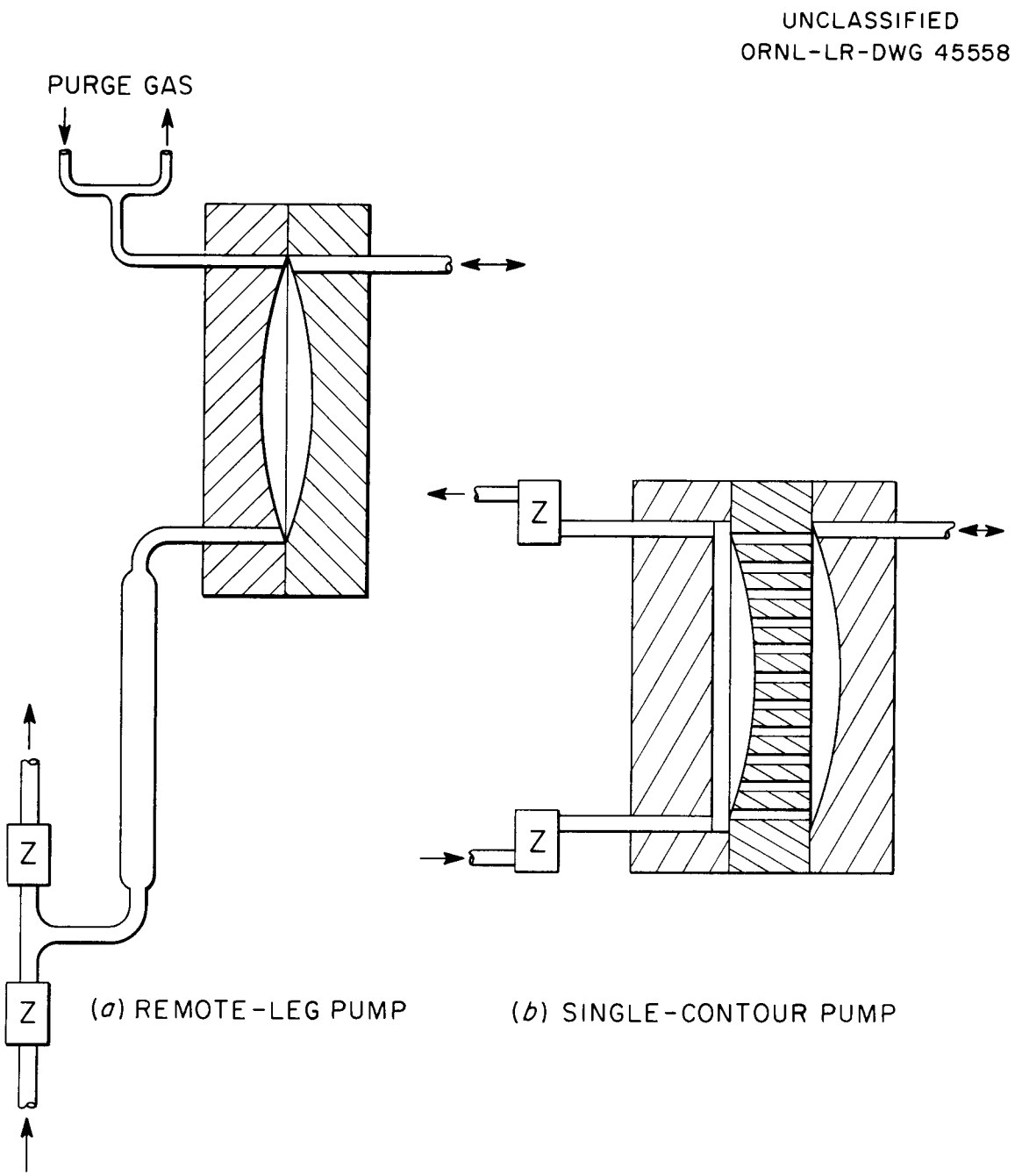


Fig. 3. Schematic Diagrams of Single-Contour and Remote-Leg Pumps.

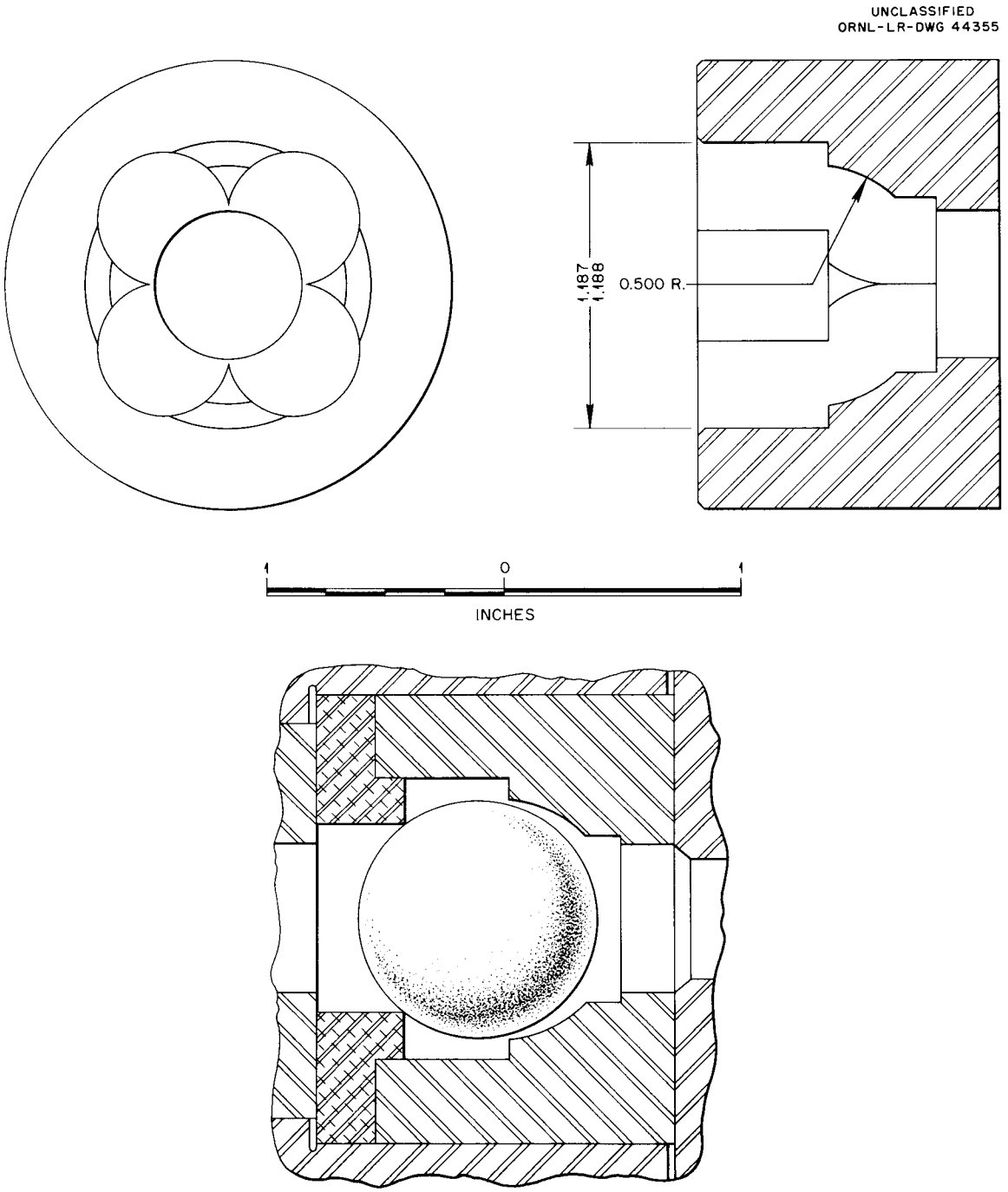


Fig. 4. Check Valve for Slurry Service.

## Test Systems

The development and testing of a pump and check valves required a test loop or system which, at low flow rates and with a minimum of attendance, could provide:

1. a suction supply at a predictable or uniform concentration,
2. a high-pressure system to receive the pump discharge,
3. a pressurizer to dampen the discharge surge,
4. a letdown device from the high- to the low-pressure system,
5. pressure and flow instrumentation.

There had been little previous experience with some of these functions, making it necessary to develop them concurrently with the pump. Since the information obtained has some application to reactor slurry systems, it is included in this report. The three test systems used are shown in Figs. 5, 6, and 7.

The glass-remote-leg test (Fig. 5) was set up to determine if a water-slurry interface could be maintained in an oscillating column and to learn what determined the location of that interface. The glass remote leg was flanged so that various diameters could be tested. Loop flow was assumed to be the length of stroke observed in the remote leg times its area times the number of strokes per minute.

The loop shown in Fig. 6 was constructed to test the remote-leg pump and the single-contour pump at high pressure. The suction-supply pump was installed to provide a positive suction head and some dump-tank agitation.

The third configuration, Fig. 7, was devised to eliminate the suction-supply pump by substituting a statically pressurized dump tank and arranging the pump suction lines so that settling of the slurry would not plug them.

From information derived from the preceding test systems, a feed system was designed and installed in the slurry reactor mockup (300 SM).

## RESULTS

The glass-remote-leg test demonstrated that a stable water-slurry interface does form in the isolation leg. Figure 8 is a plot of the mean elevation of the interface above the tee connecting the check valves versus the average velocity of the oscillating column. The slope of the band of data represents the velocity-dependent function, whereas the width of the band results from variations in the settling rates of the different slurries and densities tested. From these data the high-pressure isolation leg was designed. The glass-remote-leg test also demonstrated that gas continuously comes out of solution in the isolation leg on the suction stroke. The gas forms into bubbles which

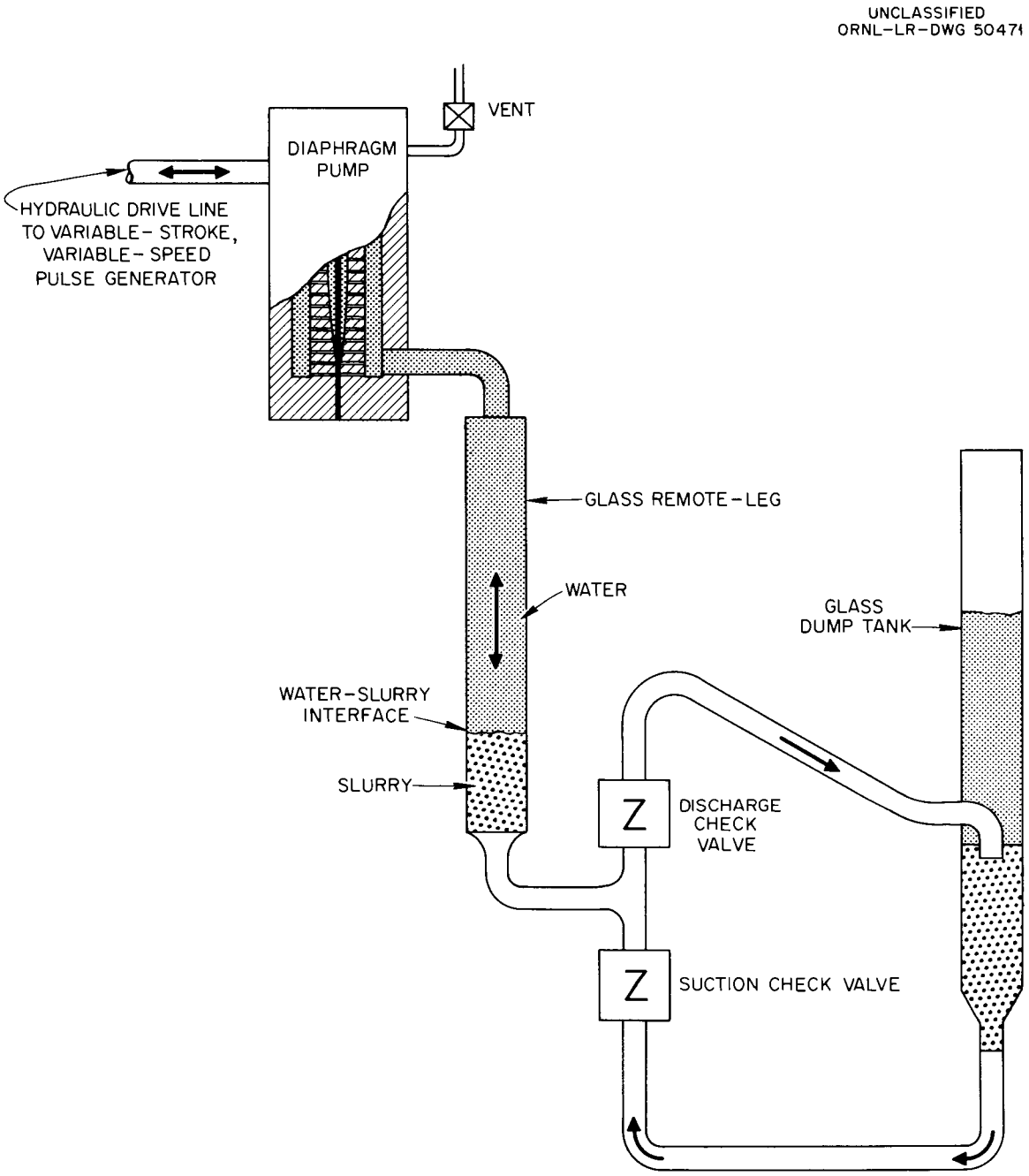


Fig. 5. Feed Pump Test Loop I; Glass Remote-Leg Test.

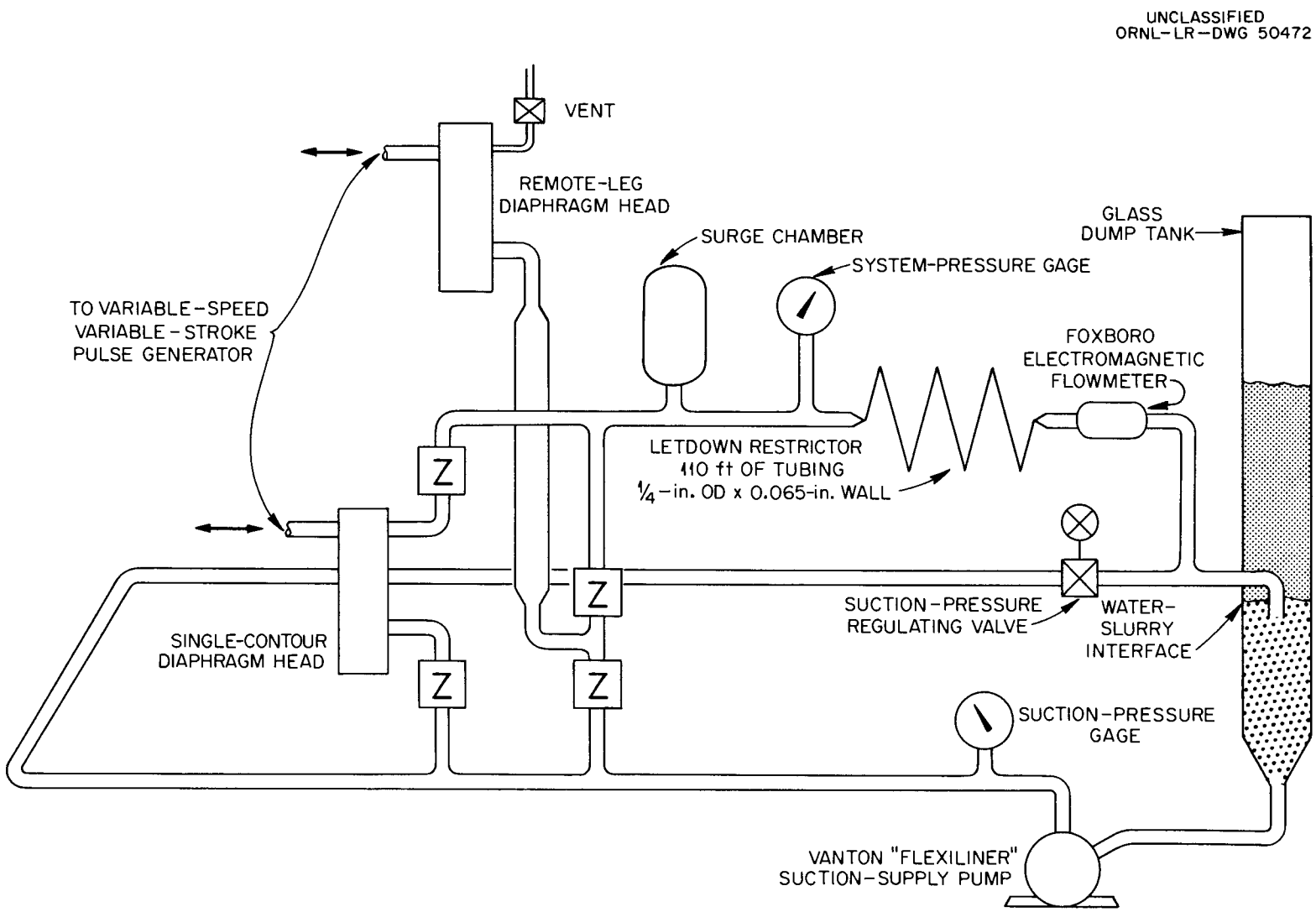


Fig. 6. Feed Pump Test Loop II; Circulating Pump Suction Supply.

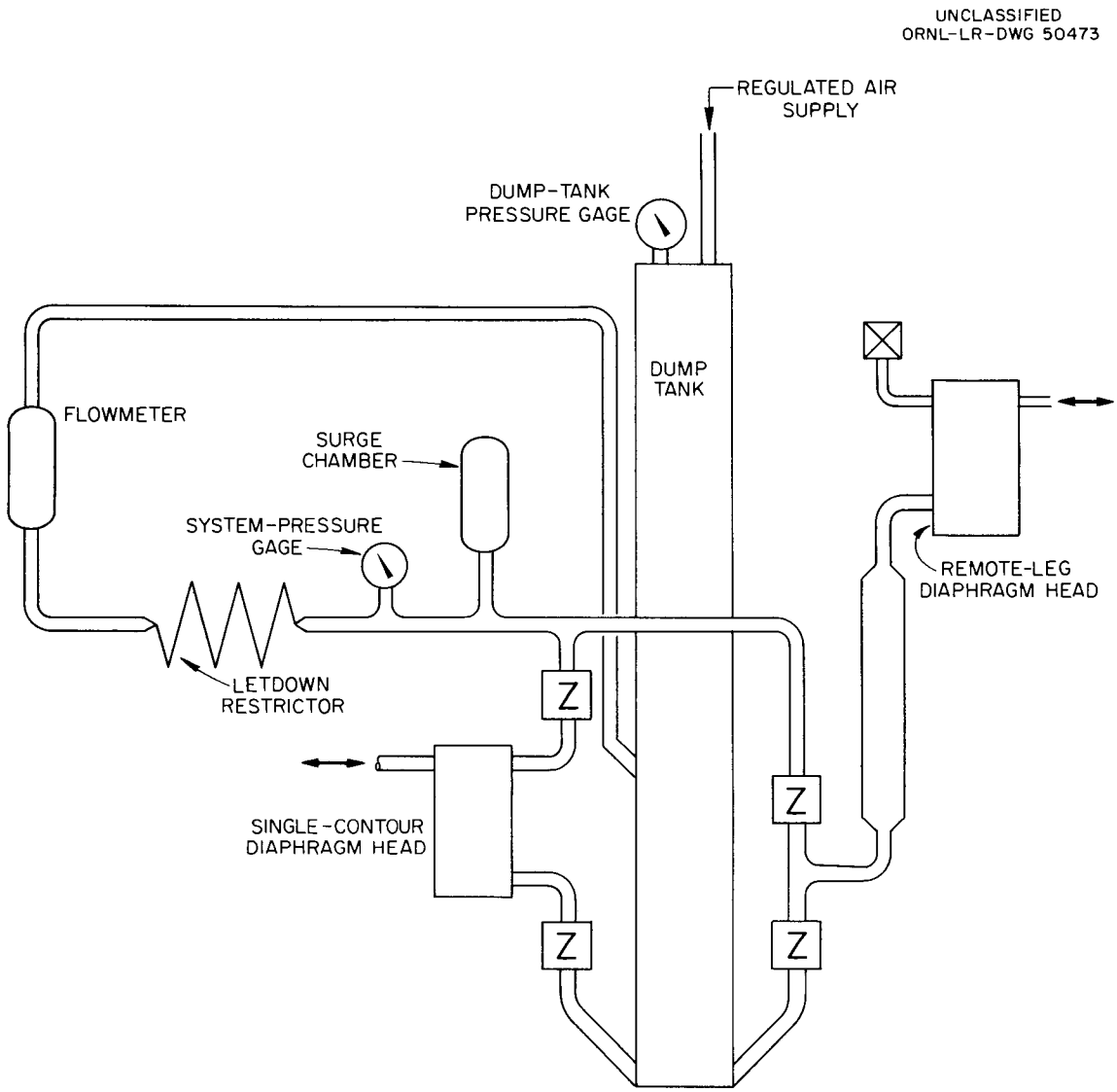


Fig. 7. Feed Pump Test Loop III; Pressurized Dump Tank.

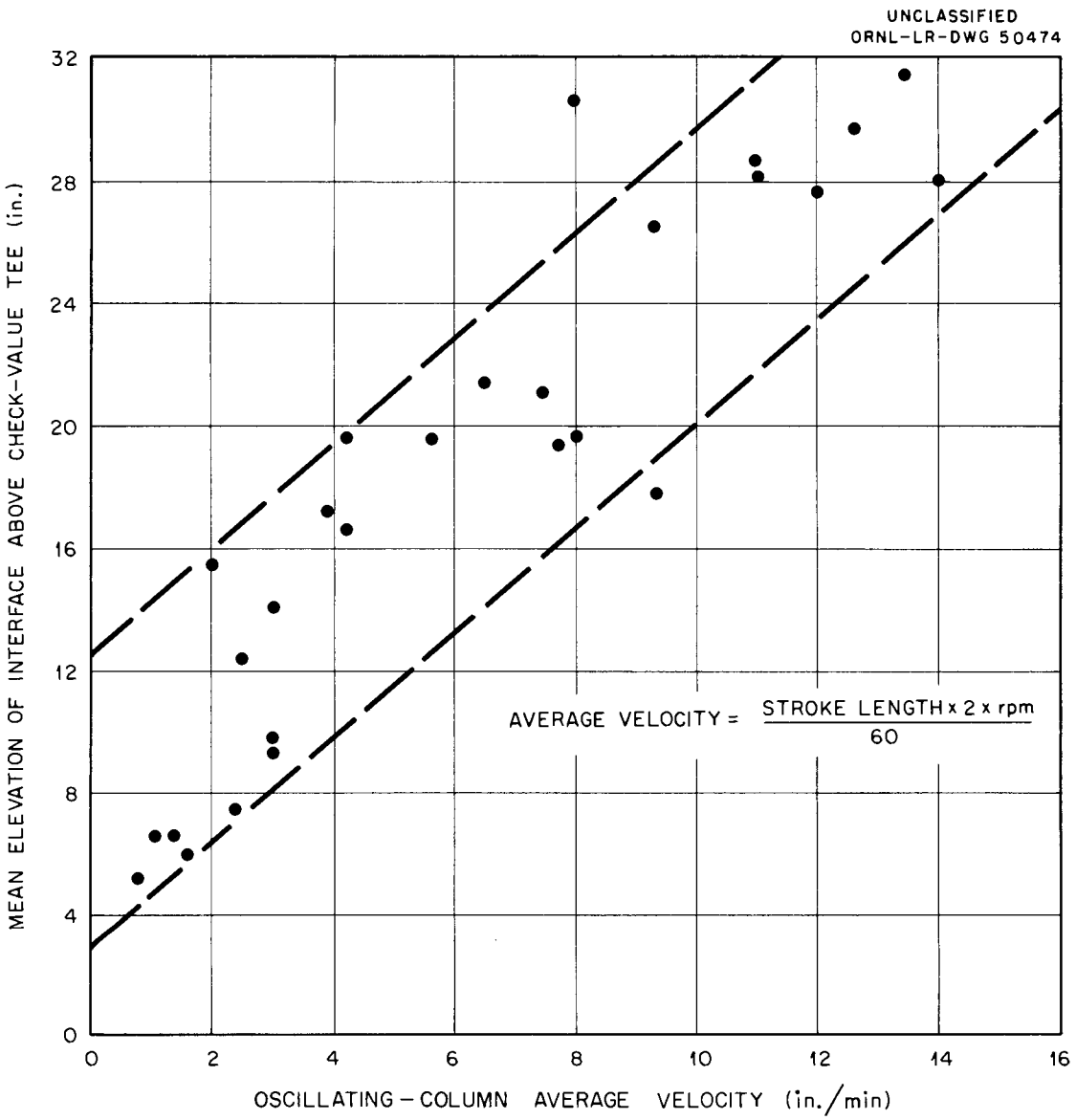


Fig. 8. Mean Elevation of Slurry-Water Interface as a Function of Oscillating-Column Average Velocity.

surround themselves with solid particles. The bubbles then rise carrying solids into the head and gas-binding the head. A continuous vent consisting of a check valve and restrictor tube connecting the top of the head to the high-pressure system was installed to prevent gas-binding. After over 1000 hr of operation of the glass remote leg, the head was disassembled and solids were found in the diaphragm chamber; however, there was no apparent damage to the diaphragm.

The operation of test loops II and III demonstrated that both the remote-leg and the single-contour heads were practical for pumping slurries to high pressure. The two heads have now operated nearly 8000 hr pumping approximately 3/4 gpm of thoria slurry at a concentration of about 1000 g of $ThO_2$ per liter against a 1500-psi head. After 6200 hr the heads were disassembled for examination. The remote-leg diaphragm was severely dented, though unbroken, while the single-contour diaphragm was unmarked, Fig. 9, The single-contour diaphragm was returned to service, but the remote-leg diaphragm was replaced. The single-contour head, being a through pump head, does not require auxiliary venting.

A duplex unit of single-contour heads coupled to a 45° inclined suction line was installed in the 300-SM or slurry mockup system. The system has since been operated for 3140 hr. The feed system has been used to concentrate the circulating stream to 950 g/liter on six occasions and to dilute back down to 0.2 g/liter on six occasions. The feed system is also on automatic standby to maintain the proper liquid volume in the system.

The pumps have operated a total of 200 hr on $H_2O$ and 140 hr on $ThO_2$ - $H_2O$ slurry. The average specific gravity of the feed has been 2.0, and the highest specific gravity has been 2.9. The unit is capable of pumping approximately 2.0 gpm to 2000 psi; however, the let-down system normally limits the pump rate to 800 to 1200 cc/min.

The storage tank is maintained at 125 to 135°C, while the feed line is cooled to approximately 75°C, giving a positive suction head of 20 to 30 psig.

There has been no difficulty with the feed system attributable to the pumps. To prevent plugging of the suction line and check valves, the suction pressure must be maintained and the suction line and pump must be flushed by pumping water for a short period after feeding slurry.

During the 8000 hr of operation of loops II and III, one set of Stellite check-valve trim, one set of tungsten carbide trim, and three sets of aluminum oxide trim were tested (Table 1). The Stellite trim deteriorated to the point of complete cessation of pumping in 60 hr. The seats were severely eroded and the balls were pitted (Fig. 10).

The considerably harder tungsten carbide trim suffered a 33% loss of pump output after 1250 hr. Its failure by erosion or "wire drawing" (Fig. 11) was similar to that of the Stellite.

UNCLASSIFIED
PHOTO 34822

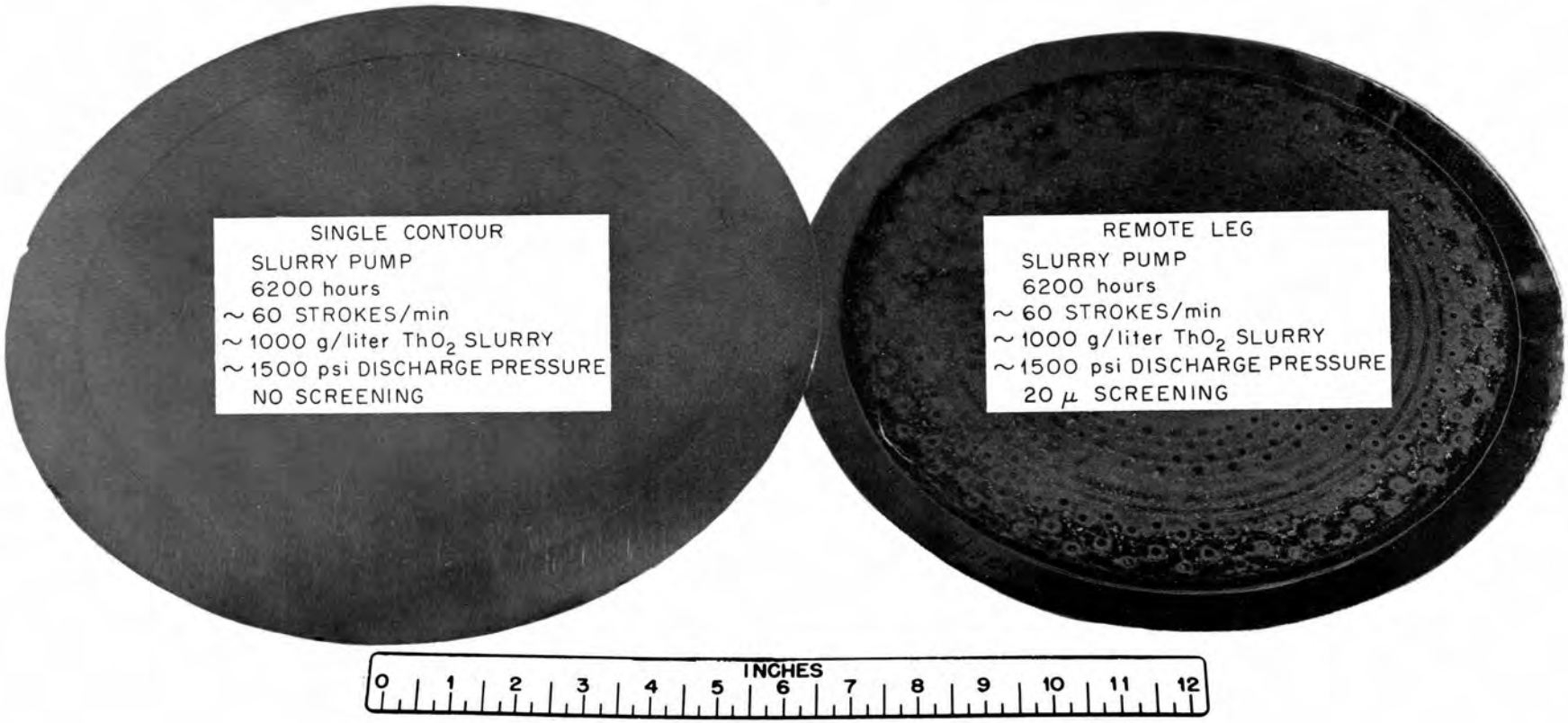


Fig. 9. Single-Contour and Remote-Leg Diaphrams After Pumping Slurry to 1500 psi for 6200 hr.

| Ball Material | Seat Material | Service Hours | Mounting Style | Remarks |
|---|---|---|---|---|
| Stellite Star J | Stellite 6 | 60 | | Gross failure caused by wire drawing, (Fig. 10); balls uniformly pitted. |
| Tungsten carbide Kennametal K96 | Tungsten carbide Kennametal K95 | 1250 | | Loss of 33% flow caused by wire drawing, (Fig. 11); balls uniformly pitted. |
| $Al_2O_3$ Alsimag 576, American Lava | $Al_2O_3$, National Beryllia | 1333 | A | Seats had radial cracks with erosion in some of the cracks. Failure appears primarily mechanical due to poor mounting. Balls uniformly worn. Average diametral loss of 0.007 in. |
| $Al_2O_3$ Alsimag 576 | $Al_2O_3$ Thermal Refractories | 3309 | A | Again some seats failed mechanically apparently due to mounting. Some seats had simply worn to a very broad seating area (Fig. 12). Balls uniformly worn. Average diametral loss of 0.004 in. |
| $Al_2O_3$ Alsimag 614, American Lava | Alsimag 614 | 1600 | C | Test still in progress. Pump performance gives no indication of valve-trim deterioration. |

Table 1. Performance of Check-Valve Trim in Slurry Feed Pump
(Pumping thorium oxide slurries of concentrations of 500 to 1000 g/liter to an average of 1500 psi)

UNCLASSIFIED
PHOTO 32303

STELLITE CHECK VALVE TRIM (DISCHARGE) APPROXIMATELY 60 hr PUMPING 500 g/liters $ThO_2$ SLURRY TO 1500 psi. JULY 1958

Fig. 10.

UNCLASSIFIED
PHOTO 32697

OCTOBER 15, 1958
BALLS K96 KH
SEATS K95 K12
KENNAMETAL TUNGSTEN CARBIDE

DISCHARGE CHECK VALVE TRIM FROM SLURRY FEED PUMP 1250 hr.
DISCHARGE PRESSURE-1500 psi. TEMPERATURE-100°F. 1600°C FIRED $ThO_2$ LOT DTII
SLURRY S.G. 1.5.

Fig. 11.

UNCLASSIFIED
PHOTO 35411

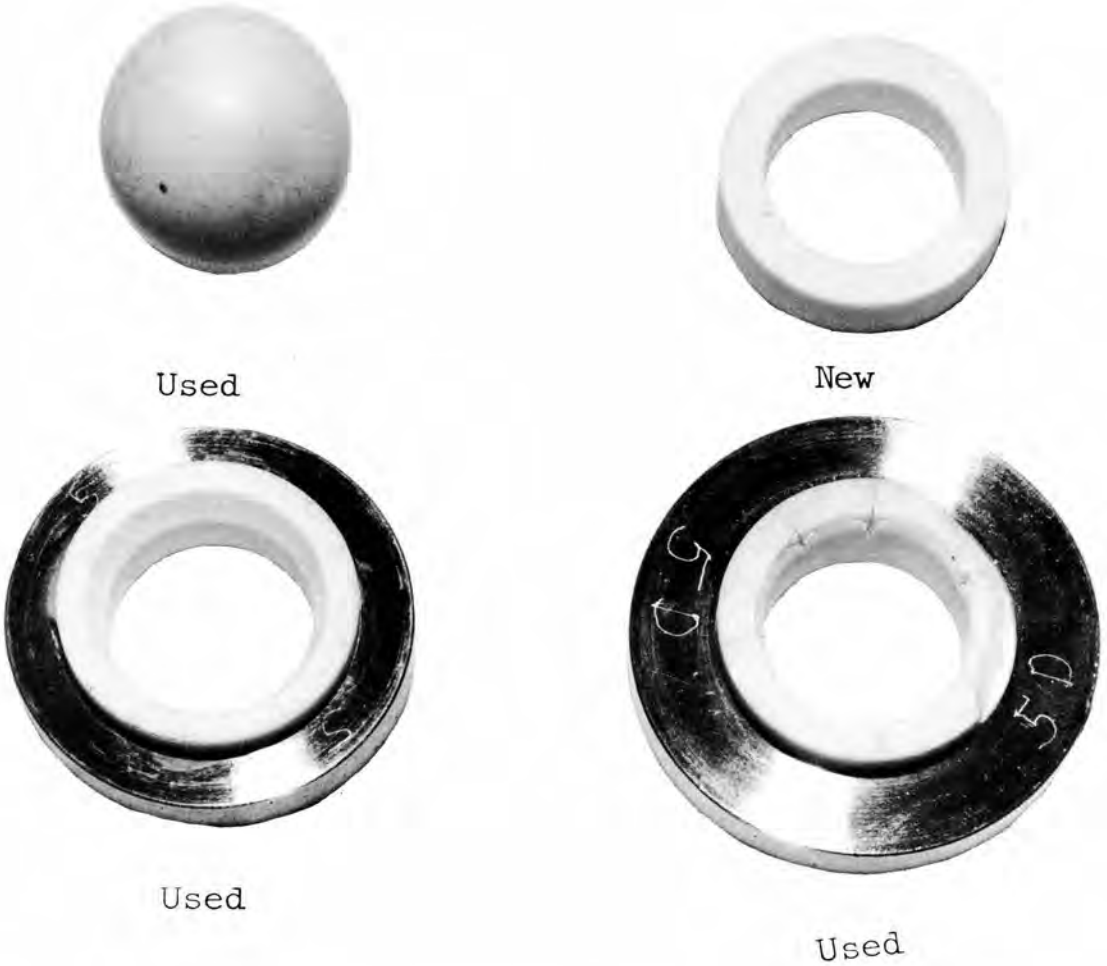


ALOX 99 %
$Al_2O_3$ VALVE TRIM
3309 hr PUMPING APPROXIMATELY 800 g/liters $ThO_2$ SLURRY TO 1500 psi.
REMOVED AUGUST 1959

Fig. 12.

The first two sets of alumina trim were removed because of decreased pump output after 1333 and 3309 hr of operation, respectively. In both cases, the seats that had failed were cracked and broken (Fig. 12), probably as a result of the inadequate support provided by the mounting in Fig. 13A. The seats that had not failed had simply worn uniformly from an original seating cone 0.015 in. wide to a spherical band ranging up to 1/8 in. wide but had no wire-drawing damage. The set of trim now on test is mounted as in Fig. 13C. There has been no detectable loss of pump output in 1600 hr of operation.

Considerable difficulty has been encountered in devising an adequate mounting for the aluminum oxide seat insert. Figure 13 illustrates three successive approaches to the problem. In all cases the insert has a 0.001-in. interference fit with the holder, and assembly is accomplished with both pieces at 300°C. Arrangements A and B did not provide adequate mechanical support and permitted the inserts to crack. A set mounted as shown in arrangement C has been on test for 1600 hr and pump performance shows no sign of deterioration. Although with metal and cermet inserts the shrink fit has provided a seal, leak rates of up to 1 cc/min of water at a $\Delta P$ of 2000 psi have been experienced between the ceramic inserts and the holders. Work is currently in progress to seal the insert by brazing it to the holder or by plating a metal to the insert and shrinking that assembly into a holder. It has been necessary to lap each seat, using a metal ball and lapping compound, to obtain a good ball-to-seat seal.

The variations possible in density, yield stress, and settling rate of the slurry make the design of an adequate suction supply difficult. Figure 14 illustrates the loss of volumetric efficiency with various slurries as the pump speed increased in the glass loop. The low flow rates with consequent low velocities also permitted dropout in the suction line, periodically resulting in plugging. The suction supply pump was installed in configuration II of Fig. 6 to provide a positive suction supply and to maintain flow above dropout velocity. This improved volumetric efficiency and eliminated plugging, but it introduced an additional piece of equipment into the low-pressure system. Configuration III maintained a positive suction head by static pressurization, and dropout in the short, near vertical, pipes did not produce an appreciable concentration gradient across the diameter of the pipe. This configuration has been the most satisfactory, and the principle has been used in the slurry low-pressure-system test and in the 300-SM loop.

The letdown restrictor, consisting of 110 ft of 1/8-in.-ID tubing, has been in service a total of 6800 hr. Periodic weighings of one section of tubing have indicated no weight loss.

The rubber-bag accumulator is satisfactory for low-temperature test-loop service, but attempts to use a gas-pressurized surge chamber failed because the gas dissolved in the high-pressure system came out of solution in the dump tank, creating an ever-increasing quantity of stable foam.

The electromagnetic flowmeter has performed satisfactorily and, as far as is known, accurately throughout the entire test in both a horizontal and a vertical position. The vertical position is recommended

UNCLASSIFIED
ORNL-LR-DWG 50475

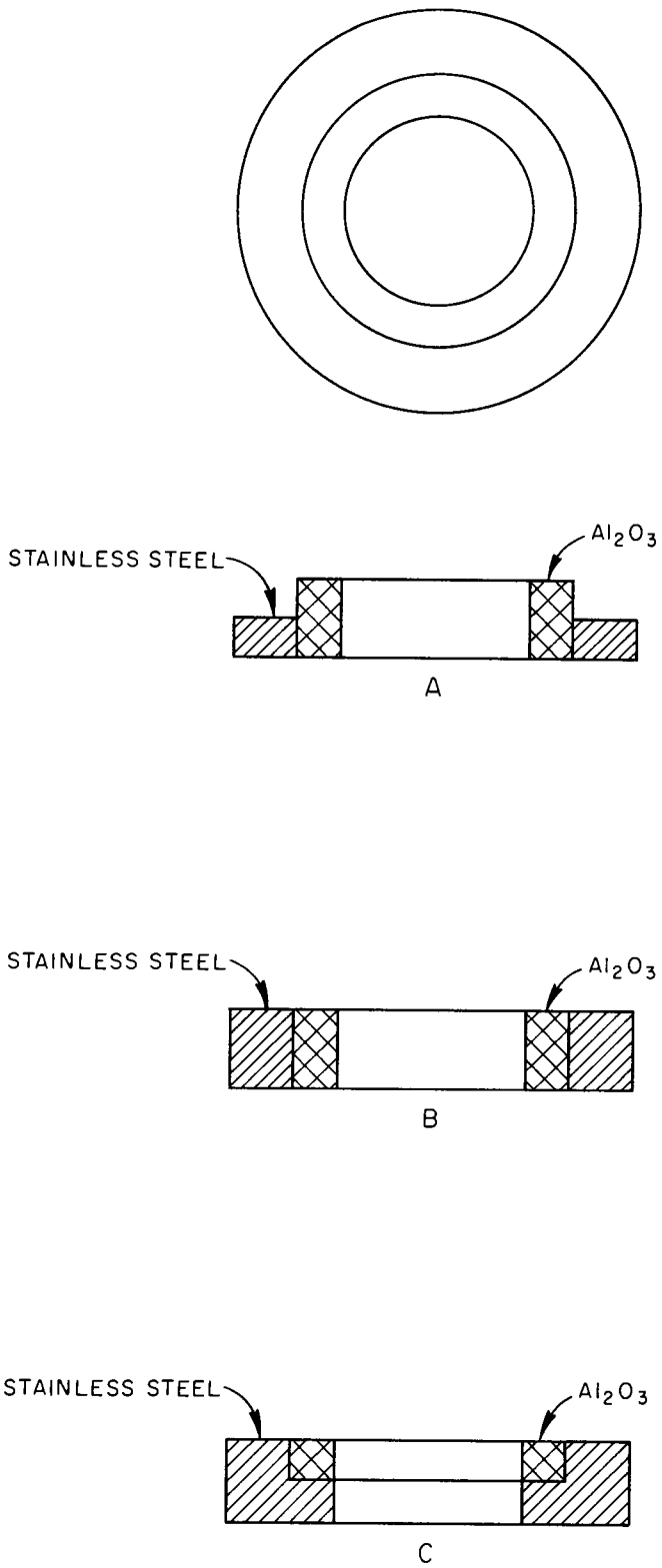


Fig. 13. Methods of Mounting Inserts in Holders.

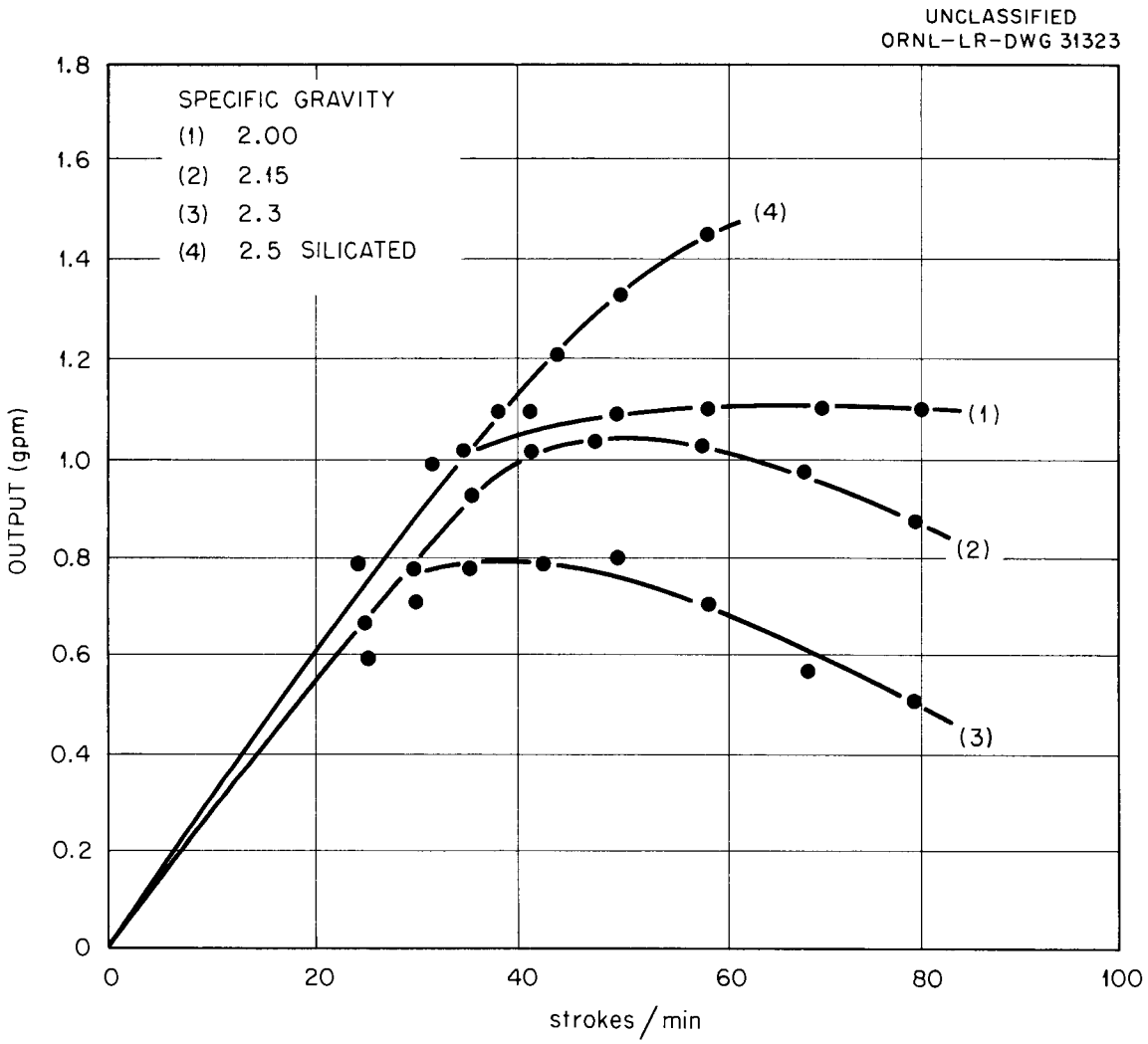


Fig. 14. Loss of Volumetric Efficiency with Speed in Glass Remote-Leg Pump Test.

to reduce the possibility of solids dropout. Pressure gages and transmitters, mounted on vertical legs to reduce solids entry, have performed satisfactorily.

## CONCLUSIONS

A reactor-grade metal-diaphragm feed pump capable of delivering 1 gpm of 1000-g/liter $ThO_2$ slurry to a 1500-psi system for at least four months has been demonstrated. Larger capacities can be designed, and longer lived check-valve trim probably can be developed.

The single-contour pump is preferable to the remote-leg pump because its diaphragm life is unaffected by solids and it does not require continuous venting. The single-contour pump has the disadvantage of taking only a half stroke.

The statically pressurized dump tank is satisfactory, although in larger sizes more agitation than that provided by the return stream is required. The static pressure required to maintain the volumetric efficiency of the pump is a function of the fluidity of the slurry, but in tests to date, 20 psi has seemed adequate.

Suction lines should be as short and as near vertical as possible.

The letdown restrictor has shown no evidence of weight loss of plugging.

The electromagnetic flowmeter is satisfactory for slurry service and should be developed for reactor service.

Standard gages and pressure transmitters are satisfactory if mounted on a settling leg to keep solids out.

## REFERENCES

1. R. Blumberg et al., Diaphragm Feed Pump Development Program Progress Report, ORNL CF-56-10-114 (Oct. 29, 1956).

2. E. C. Hise, Design, Development, and Operation of Metal-Diaphragm Reactor-Service Pumps, ORNL-2841 (April 26, 1960).

3. I. Spiewak et al., HRP Prog. Rep. Oct. 31, 1959, ORNL-2879 (Jan. 27, 1960).

4. R. Blumberg, Further Evaluation of Check Valve Material for the Homogeneous Reactor Program, ORNL CF-59-8-135 (Aug. 4, 1959).

ORNL-3008
UC-38 Equipment, Methods, and Techniques
TID-4500 (15th ed.)

INTERNAL DISTRIBUTION

1. HRP Director's Office
   Room 259, Bldg. 9204-1
2. S. E. Beall
3. A. M. Billings
4. D. S. Billington
5. E. G. Bohlmann
6. S. E. Bolt
7. J. R. Brown
8. W. D. Burch
9. C. E. Center (K-25)
10. R. H. Chapman
11. R. A. Charpie
12. R. S. Cockreham
13. E. L. Compere
14. F. L. Culler
15. D. G. Davis
16. R. J. Davis
17. O. C. Dean
18. D. M. Eissenberg
19. L. B. Emlet (K-25)
20. J. L. English
21. D. E. Ferguson
22. C. H. Gabbard
23. W. R. Gall
24. J. P. Gill
25. J. C. Griess
26. W. R. Grimes
27. P. A. Haas
28. P. H. Harley
29. C. S. Harrill
30. P. N. Haubenreich
31. J. W. Hill
32-41. E. C. Hise
42. H. W. Hoffman
43. A. Hollaender
44. G. H. Jenks
45. W. H. Jordan
46. P. R. Kasten
47. G. W. Keilholtz
48. C. P. Keim
49. M. T. Kelley
50. M. J. Kelly
51. J. A. Lane
52. C. G. Lawson
53. S. C. Lind
54. R. S. Livingston
55. R. A. Lorenz
56. M. I. Lundin
57. R. N. Lyon
58. W. L. Marshall
59. J. P. McBride
60. H. F. McDuffie
61. R. E. Moore
62. R. L. Moore
63. C. S. Morgan
64. K. Z. Morgan
65. J. P. Murray (Y-12)
66. M. L. Nelson
67. L. F. Parsly, Jr
68. F. N. Peebles
69. D. Phillips
70. M. L. Picklesimer
71. J. L. Redford
72. W. D. Reel
73. S. A. Reed
74. P. M. Reyling
75. D. M. Richardson
76. R. C. Robertson
77. M. W. Rosenthal
78. H. C. Savage
79. D. Scott, Jr
80. C. H. Secoy
81. E. D. Shipley
82. M. D. Silverman
83. M. J. Skinner
84. A. H. Snell
85. I. Spiewak
86. J. A. Swartout
87. A. Taboada
88. E. H. Taylor
89. D. G. Thomas
90. M. Tobias
91. W. E. Unger
92. G. M. Watson
93. A. M. Weinberg
94. C. E. Winters
95-96. Reactor Experimental Engineering Library
97-98. Central Research Library
99-100. ORNL - Y-12 Technical Library, Document Reference Section
101-120. Laboratory Records Department
121. Laboratory Records, ORNL R.C.

EXTERNAL DISTRIBUTION

122. Division of Research and Development, AEC, ORO
123. D. H. Groelsema, AEC, Washington
124. F. P. Self, AEC, Oak Ridge
125. M. E. Wadsworth, University of Utah
126-581. Given distribution as shown in TID-4500 (15th ed.) under Equipment, Methods, and Techniques category (75 copies - OTS)