MARTIN MARIETTA ENERGY SYSTEMS LIBRARIES
3 4456 0361552 2

CENTRAL RESEARCH LIBRARY
DOCUMENT COLLECTION

4

ORNL-3013
UC-10 - Chemistry-Separation Processes
for Plutonium and Uranium

POWER REACTOR FUEL PROCESSING

PILOT PLANT

BROOKHAVEN FUEL PROGRAM

W. T. McDuffee

CENTRAL RESEARCH LIBRARY
DOCUMENT COLLECTION
LIBRARY LOAN COPY
DO NOT TRANSFER TO ANOTHER PERSON
If you wish someone else to see this
document, send in name with document
and the library will arrange a loan.

OAK RIDGE NATIONAL LABORATORY
operated by
UNION CARBIDE CORPORATION
for the
U.S. ATOMIC ENERGY COMMISSION

Printed in USA. Price $1.50. Available from the

Office of Technical Services
Department of Commerce
Washington 25, D.C.

LEGAL NOTICE

This report was prepared as an account of Government sponsored work. Neither the United States, nor the Commission, nor any person acting on behalf of the Commission:

A. Makes any warranty or representation, expressed or implied, with respect to the accuracy, completeness, or usefulness of the information contained in this report, or that the use of any information, apparatus, method, or process disclosed in this report may not infringe privately owned rights; or

B. Assumes any liabilities with respect to the use of, or for damages resulting from the use of any information, apparatus, method, or process disclosed in this report.

As used in the above, "person acting on behalf of the Commission" includes any employee or contractor of the Commission, or employee of such contractor, to the extent that such employee or contractor of the Commission, or employee of such contractor prepares, disseminates, or provides access to, any information pursuant to his employment or contract with the Commission, or his employment with such contractor.

ORNL-3013

Contract No. W-7405-eng-26

CHEMICAL TECHNOLOGY DIVISION

Pilot Plant Section

POWER REACTOR FUEL PROCESSING PILOT PLANT
BROOKHAVEN FUEL PROGRAM

W. T. McDuffee

DATE ISSUED

DEC 1 - 1960

OAK RIDGE NATIONAL LABORATORY
Oak Ridge, Tennessee
Operated by
UNION CARBIDE CORPORATION
for the
U. S. Atomic Energy Commission

MARTIN MARIETTA ENERGY SYSTEMS LIBRARIES

3 4456 0361552 2

ABSTRACT

Results of processing 47 metric tons of Brookhaven spent reactor fuel are summarized. Measured uranium and plutonium losses totaled 1.3 and 0.8 per cent of the fuel processed. Gross gamma decontamination factors averaged 9.1×10^4 and 1.2×10^6, respectively, for uranium and plutonium. Improved decontamination from fission products was demonstrated in the operation of the extraction columns with the organic phase as the continuous phase.

CONTENTS

		Page
1.0	Introduction	3
2.0	Summary	3
3.0	Condensed Tabulation of Results	5
3.1	Material Balance	5
3.2	History of the Fuel	5
3.3	Solvent Extraction Losses	5
3.4	Decontamination	5
3.5	Solvent Recovery	6
3.6	Acid Recovery System	6
3.7	Acid Utilization	6
3.8	Waste Disposal	6
4.0	Flowsheets	16
4.1	Chemical Flowsheet	16
4.2	Equipment and Sampling Flowsheet	16
5.0	Procedure	16
5.1	Fuel Handling	16
5.2	Feed Preparation	17
5.3	Solvent Extraction	18
5.3.1	Codecontamination Cycle (Building 3019 Facility)	18
5.3.2	Partitioning and Second Cycles (Building 3505 Facility)	19
6.0	Operating Schedule	21
7.0	Decontamination	23
8.0	Accountability Measurements	39
8.1	Plant Input Measurements	39
8.1.1	Volume Measurements	39
8.1.2	Sampling	43
8.1.3	Analytical Procedures	43
8.2	Plant Output	43
8.2.1	Volume Measurements	44
2.2.2	Analytical Procedures	44
8.3	Material Balance	44
9.0	Waste Disposal	45
10.0	Appendix	45
10.1	Chemical Flowsheet	45
10.2	Equipment Flowsheet	45
10.3	Equipment Data	45
10.3.1	Pulsed Columns	45
10.3.2	Ion Exchange System	45
10.3.3	Evaporators	47
10.3.4	Silica Gel System	47
10.3.5	Acid Recovery System	47
10.4	Solvent Losses	52
11.0	References	52
12.0	Acknowledgment	

1.0 INTRODUCTION

The Power Reactor Fuel Processing Pilot Plant located at Oak Ridge National Laboratory was designed to process spent reactor fuel originating in various Commission-owned research reactors. The associated development program is aimed at the development of chemical flowsheets and plant equipment for processing power reactor fuels that will be available within the next few years.

This report deals with a 4-month period of plant operation (February 20-March 27 and April 25-August 4, 1959) in which 46.8 metric tons of spent fuel that had been discharged from the Brookhaven reactor was processed, and it presents the results obtained and the conclusions reached during the course of the run.

The spent fuel consisted of 1.05-in.-OD x 4-in.-long pieces that had been placed in an aluminum sheath to an active length of 10 ft. Upon discharge from the reactor and after a decay period, the sheathed rods were sheared by the reactor operator into 4-in. pieces still carrying parts of the aluminum sheath. The pieces, including the sheath, were dissolved in nitric acid in a continuous dissolver, the solution adjusted to feed specifications, and continuously processed through three cycles of solvent extraction for decontamination and separation using tri-n-butyl phosphate (TBP). The uranium was recovered as uranyl nitrate solution; the plutonium was recovered and concentrated by sorption on cation exchange resin and elution with nitric acid. The extractant, 30 volume per cent TBP in kerosene diluent, was continuously recovered and regenerated by scrubbing with 0.2-0.4 aqueous sodium carbonate.

The objectives of this program were to:

1. Demonstrate a satisfactory chemical flowsheet for the continuous recovery of plutonium and uranium from spent reactor fuel.

2. Conduct a sustained run in pilot plant equipment that would demonstrate, under conditions of equilibrium operation, the capabilities of the pilot plant facility.

3. Separate and recover for return to normal production channels ~22.6 kg of plutonium contained in 46.8 metric tons of spent Brookhaven reactor fuel.

4. Demonstrate and evaluate the effects of operating the extraction columns with the organic phase continuous.

5. Continue the development of satisfactory accountability-measurement procedures.

2.0 SUMMARY

A total of 46.8 metric tons of spent Brookhaven reactor fuel was processed to recover 22.6 kg of plutonium and 46.6 tons of depleted uranium. Measured losses totaled 1.3 and 0.8 per cent, respectively, for uranium and

plutonium. The material balances across the plant were 100.9 and 102.7 per cent, respectively, for uranium and plutonium; the program balances, i. e., the recovery values found in the plant operation versus the theoretical values, were 98.2 and 92.0 per cent. The program balances reflect the effect of the storage canal sludge resulting from fragmented and fractured fuel pieces that were not processed.

Gross gamma decontamination factors averaging 9.1×10^4 and 1.2×10^6, respectively, were demonstrated for the recovered uranium and plutonium products. Decontamination factors for uranium were a factor of 2 lower than the program average when the codecontamination cycle extraction column was operated with the aqueous phase continuous, but were a factor of 1.1 higher than the average when the organic phase was continuous. Uranium product recovered during aqueous-continuous operation exceeded radiation specifications by a factor of 2-10 but met these in all respects during organic-continuous operation. Uranium-plutonium separation factors averaged 5.6×10^4.

The fuel processed had been irradiated to an average of 470 Mwd/T and had decayed for 600-650 days at time of processing. The aluminum-canned fuel pieces had been mechanically sheared into 4-in. lengths at the reactor site and were transported to ORNL by truck. The fuel pieces in most cases arrived with the residual sheath of aluminum intact; however, attack by canal water on the exposed uranium metal rods during storage resulted in some fragmentation of the uranium with the generation of finely divided material which settled to the storage canal floor. The sediment (canal sludge) was not processed.

The fuel was fed to a continuous dissolver at approximately 400 kg/day along with 8 M nitric acid which was added continuously. The raw dissolver solution was continuously withdrawn from the dissolver to a catch tank; suitable volumes were periodically withdrawn from the catch tank, adjusted batchwise, and continuously processed according to a Purex codecontamination flowsheet using 30 per cent TBP in kerosene as extractant. The flowsheet included coextraction, costripping, and evaporation of the uranium and plutonium in a codecontamination cycle. The reconstituted uranium-plutonium stream was further processed in a partitioning cycle which separated the two products, each of which was then processed in separate extraction-strip solvent extraction cycles. The final uranium solvent extraction product stream was passed through a silica-gel bed and evaporated to approximately 400 g/liter and shipped. The plutonium product from the final plutonium solvent extraction cycle was passed through a bed of cation exchange resin for concentration and further decontamination. The sorbed plutonium was eluted from the resin bed with 5.7 M nitric acid at an average concentration of 46.4 g/liter and packaged for shipment in 15-liter 5.7-in. polyethylene bottles supported with 6 in. Schedule 10 pipe. Wastes were monitored for uranium and plutonium before discharge to the radioactive waste storage facilities. A total of 2.4×10^5 liters of high-level waste containing 4.2×10^5 curies of activity were generated; the total of all wastes was 1.9×10^6 liters.

The program was conducted in two parts; the first, in which 9.8 tons of fuel was processed, was completed in 34 days of operation time with an onstream operating efficiency of 73 per cent and the second, in which 38.2 tons was processed on 93 days of operation, had an onstream efficiency of 96 per

cent. About 50 per cent of the down time was scheduled for equipment modification to permit operation of the extraction columns with the organic phase continuous.

Development of accountability measurements and procedures continued throughout the program as a part of the over-all accountability measurement program. The limits of error associated with measurement of plant input during the program were determined to be ± 1.8 per cent for uranium and ± 1.2 per cent for plutonium.

3.0 CONDENSED TABULATION OF RESULTS

This section includes a condensed tabulation of results accumulated during the run.

3.1 Material Balance

A material balance for the plant and program is shown in Table 3.1. The input data are based on measurements of the uranium and plutonium content of feed solution samples withdrawn from the accountability measurement tank, which is equipped with carefully maintained volume and density instruments. Output data are based on measurements of the uranium and plutonium content of the product and waste solutions. The limits of error were determined by statistical techniques.[1] The uranium and plutonium content of the storage canal sludge that had accumulated was not determined and probably accounts for most of the difference between the uranium accounted for in the processing program and that reflected in accountability office charges. At least a portion, but not all, of the plutonium differences also may be accounted for in the same manner.

3.2 History of the Fuel

The irradiation and decay history of the fuel processed is shown in Table 3.2. The history of the small amount of material contained in the "Chalk River Flats" remaining from a previous program was uncertain and is not included.

3.3 Solvent Extraction Losses

Uranium and plutonium solvent extraction losses averaged over the program are shown in Table 3.3. Equilibrium losses are those determined from the analyses of flowing streams at steady state; the composite losses were determined from accumulated losses determined by analyses of each lot of effluent waste that left the plant.

3.4 Decontamination

Decontamination factors for uranium and plutonium are given in Table 3.4 for various phases of the program involving changes in the operation of the solvent extraction system. The variations in gross gamma decontamination factors with time and as a function of changes are shown in Fig. 3.1. Phase 1 of the program, designated as BNL-1, was conducted over a period of

34 days during which all solvent extraction columns were operated with the aqueous phase continuous. The BNL-2 portion of the program was conducted for a period of 93 days; the first 27 days of operation were completed under the conditions of BNL-1 (aqueous-continuous operation); but on the 27th day of operation the scrub column (HS-column) was converted to organic-continuous operation. After noting the improvement in decontamination during the next 11 days the extraction column (HA-column) was also converted to organic-continuous operation (phase 2). On the 44th day of operation, the second uranium cycle extraction column (ID-column) was converted to organic-continuous operation and similarly on the 72nd day the IA-column was converted to organic continuous operation (phase 3). Phase 4 represents a special case where the adjusted codecontamination cycle feed was fed to the partitioning cycle.

Over-all gross gamma and fission-product decontamination factors are given in Table 3.5. The average compositions of feed and product streams are shown in Table 3.6; typical contaminant spectra are shown in Table 3.7. The final uranium and plutonium products met specifications for use as feed for the conversion-plant (8 γ c/m/mg for uranium[2] and 10 millicuries β-γ emitters other than Pu for plutonium[3]).

3.5 Solvent Recovery

The solvent recovery systems in each of the two facilities were operated continuously to regenerate spent solvent for reuse in the solvent extraction system. The distribution of solvent losses is shown in Table 3.8. Fission product distribution in the spent- and recovered-solvent streams and the decontamination obtained are shown in Table 3.9. These data are based on the analyses of flowing stream samples withdrawn from the system at 24-hr intervals. The data for the modifications in stripping column conditions were taken with the extraction column operating aqueous continuous, and the period of observation for each condition was 24 to 36 hr.

3.6 Acid Recovery System

No acid recovery system is included in the Building 3019 facility since the extraction column raffinates were in general scheduled for further processing to recover fission products. In the Building 3505 facility the acid recovery system was operated periodically whenever the acid content of wastes warranted or was desirable, i. e., about 50 per cent of the time. During such periods approximately 90 per cent of the acid fed to the system was recovered.

3.7 Acid Utilization

During the continuous dissolution of the sheared fuel rods along with the remnants of the aluminum cans, an average total acid consumption of 4.58 moles of nitric acid per mole of dissolved uranium was demonstrated.

3.8 Waste Disposal

The volumes and activity contents of the waste streams generated in the BNL program are shown in Table 3.10. A total of 2.2×10^5 liters of decon-

tamination-cycle extraction raffinate, averaging 1.76 curies of β emitters/liter, was transferred to the Fission Product Recovery Plant for further processing; the balance was discharged directly to the chemical waste facilities. The aqueous high-activity-level waste averaged 5.1 liters/kg U processed and contained in this volume 9 curies of activity; low-level wastes, totaling 36 liters/kg U processed, were generated that contained 0.2 curie of activity.

Table 3.1. Material Balance: BNL Program

	Input			
	SS Charges		Feed Measurements	
	U, kg	Pu, g	U, kg	Pu, g
BNL Fuel	48,057	24,736	46,794 ± 824	22,156 ± 258
Chalk River Flats[a]	8	-	-	-
Total	48,065	24,736	46,794 ± 824	22,156 ± 258
Balance: Feed/SS, %			97.4	89.6

	Output	
	U, kg	Pu, g
Product		
Shipped	45,920	22,414
On Hand	703	151
Total	46,623 ± 192	22,565 ± 56
Losses		
Codecontamination Cycle	126	92
Partitioning and Second Cycles	462	90
Total	588 ± 68	182 ± 37
Total Accounted for	47,211 ± 203	22,747 ± 68
Plant Balance		
Recovery/Feed, %	100.9	102.7
Program Balance		
Recovery/SS Charges, %	98.2	92.0

[a]Left from a previously completed program.

Table 3.2. History of Fuel Processed

Phase	Irradiation Level, Mwd/metric ton	Average Decay at Processing, days	Material Processed[a]	
			U, kg	Pu, g
BNL-1[b]	470	~600	9.731	4,610
BNL-2[b]	470	~650	37,063	17,546
Total	-	-	46,794	22,156

[a]Based on feed measurements.

[b]The program was interrupted. Plant modifications were conducted between the two phases.

Table 3.3. Solvent Extraction Losses

Process Step		Equilibrium		Composite	
		U	Pu	U	Pu
Codecontamination Cycle, % Feed to the Complex					
Codecontamination Cycle	Extraction	<0.01	<0.01	0.03	0.07
	Stripping	< 0.01	< 0.01	0.18	0.20
	Plant Waste[a]	-	-	0.28	0.42
Partitioning and Subsequent Cycles, % Feed to Building 3505 Facility					
Partitioning Cycle	Extraction	<0.01	<0.01	0.01	0.05
Second U Cycle	U-extraction	0.07	0.03	0.19	0.05
Second Pu Cycle	Pu-extraction	<0.01	<0.01	0.01	0.02
Miscellaneous	Miscellaneous Plant Waste	-	-	0.77[b]	0.28[b]
Over-all Total, % Feed to Codecontamination Cycle		-	-	1.26[c]	0.82[c]

[a]Total of all measured losses in this cycle.

[b]Includes stripping losses in this cycle but not the three extraction losses above.

[c]Total of plant waste from codecontamination cycle plus total of miscellaneous plant waste and extraction losses in partitioning and second cycles.

Table 3.4. Uranium Decontamination Factors

	Gross γ Decontamination Factor			
	Phase 1[a]	Phase 2[b]	Phase 3[c]	Phase 4[d]
Codecontamination Cycle	150	1130	1130	-
Partitioning Cycle	14	24	30	1.0×10^4
Second U-Cycle	3	3	3	3
Silica-gel Column	2	2	1	1

[a]All columns aqueous continuous.

[b]HA-column bottom operated organic continuous.

[c]HA-, ID-, and IA-columns operated organic continuous.

[d]Codecontamination cycle feed directly to partitioning cycle (IA-column) with prior processing in the codecontamination cycle.

Table 3.5. Over-all Decontamination

Product	Decontamination Factors				U-Pu Separation Factor
	Gr γ	Ru	Zr-Nb	TRE	
Uranium					
Phase 1[a]	4.5×10^4	5.6×10^4	1.1×10^4	1.7×10^7	1.6×10^6
Phase 2	1.3×10^5	3.0×10^4	1.2×10^5	7.1×10^6	5.7×10^4
Phase 3	5.3×10^4	8.5×10^3	612	1.5×10^6	1.6×10^4
Average	7.6×10^4	3.2×10^4	4.4×10^4	8.5×10^6	5.6×10^5
Plutonium					
Phase 1	1.5×10^6	-	-	-	9.5×10^6
Phase 2	1.1×10^6	-	-	-	2.4×10^6
Phase 3	1.8×10^6	-	-	-	-
Average	1.5×10^6	-	-	-	5.9×10^6

[a]See Sec. 3.4 for explanation of phase conditions.

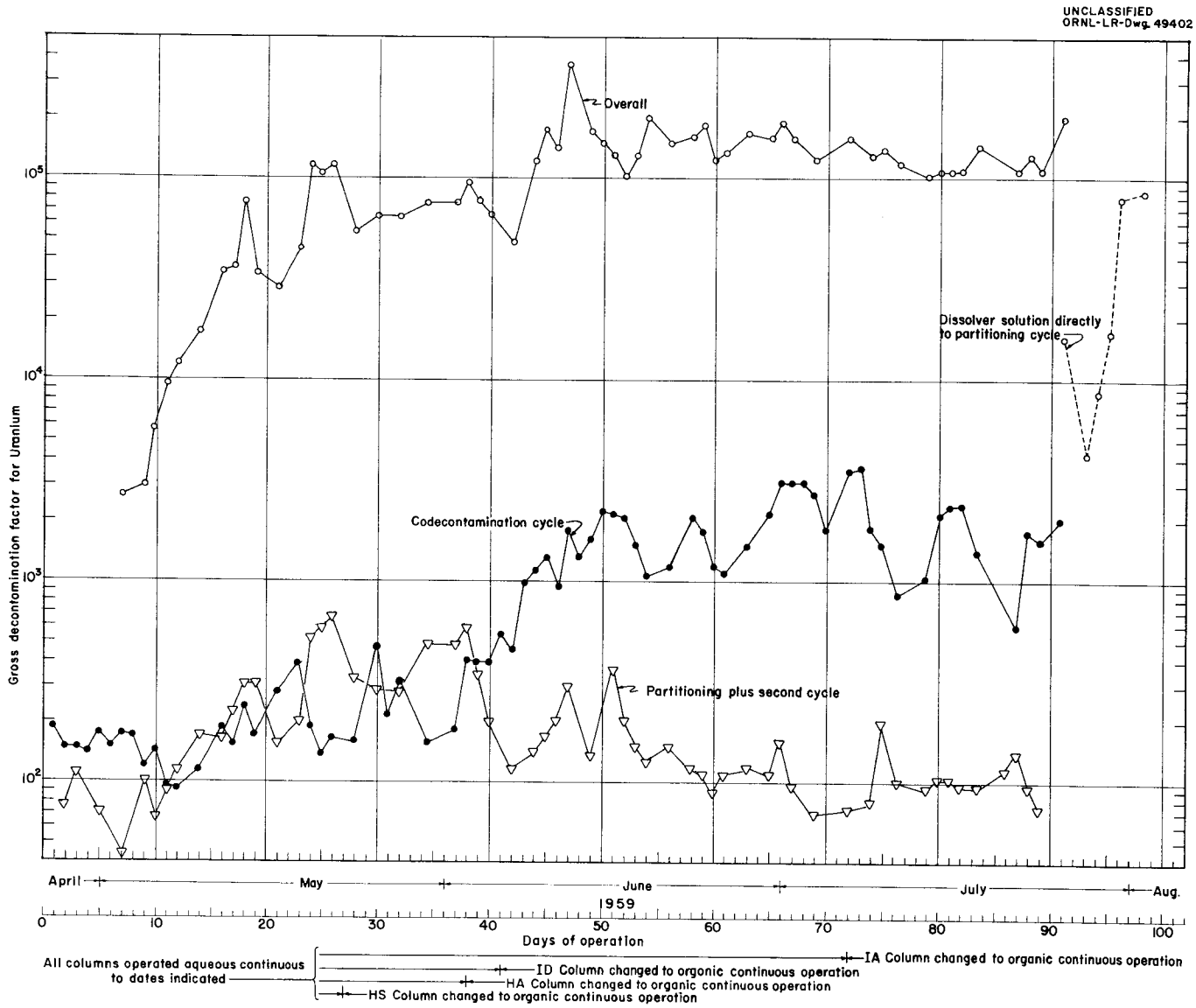

Fig. 3.1. Decontamination factors, BNL-2 program

Table 3.6. Average Composition of Feeds and Products

	Composition								
	Ionic				Radio-ion, c/m/mg U				
	U, g/l	Pu, g/l	HNO_3, M	Al, M	Gr γ	Ru γ	Zr-Nb γ	Nb γ	TRE β
Codecontamination Cycle									
Feed	332	0.159	1.80	0.3[a]	9.0×10^5	9.4×10^4	3.3×10^5	1.0×10^5	1.2×10^6
Product	382	0.179	0.85	-	3.3×10^3	652	2.7×10^3	1.4×10^3	95
Partitioning Cycle									
Feed	310	0.142	1.98	-	2.5×10^4	-	-	-	-
U-product	406	<0.0001	1.51	-	373	-	-	-	-
Second U-Cycle									
U-product	408	<0.0001	0.71	-	30	3.0	27	3	0.2
Ion Exchange									
Pu-product	<0.04	46.4	4.8	-	1.8×10^3[b]	-	-	-	-

[a]Estimated from calculated aluminum content of cans.

[b]Activity in c/m/mg Pu

Table 3.7. Contaminants: Typical Uranium and Plutonium Product

Contaminant[a] (ppm)	Uranium Product	Plutonium Product
Al	7	230
B	3	< 100
Ca	20	Not sought
Cr	< 2	< 100
Cu	2	< 200
Fe	<14	~240
Mn	4	< 500
Mo	-	< 500
Ni	<1	< 500
Si	16	Not sought
Ti	-	< 500
Zr	-	< 100

[a]Symbol "<" indicates lower limit of quantitative estimation by procedure used. Symbol "-" indicates contaminant was sought and not found.

Table 3.8. Solvent Losses

Facility	Solvent Loss Distribution, liters/kg U Processed					
	Solvent Extraction	Leakage	Filter Flush	Column Modifi-cations	Column Cleanout	Total
Codecontamination Cycle	0.014	-	0.011	0.020	0.005	0.050
Partitioning and Second Cycles	0.026	0.011	-	0.055	0.005	0.097
Total	0.040	0.011	0.011	0.075	0.010	0.147

Table 3.9. Codecontamination Cycle Solvent Recovery System: Fission Product Activity Distribution and Decontamination

Condition	Fission Product Activity, c/m/ml		Decontamination Factor
	Spent Solvent	Recovered Solvent	
1. HC-column, aqueous continuous[a]	1.6×10^5	2.0×10^4	8
2. HC-column, organic continuous[a]	2.2×10^5	1.5×10^4	15
3. HA-column, organic continuous[b]	4.8×10^4	3.5×10^4	1.3

[a]HA-column operated aqueous continuous.

[b]HC-column operated aqueous continuous.

Table 3.10. Waste Disposal

Codecontamination Cycle (Building 3019)						Partitioning and Second Cycles (Building 3505)		Combined Totals, all cycles	
High Level Waste[a]		Intermediate Level Waste[b]		Total Wastes		Intermediate Level Waste[b]			
Volume, liters	β-Activity, curies	Volume, liters	β-Activity, curies	Volume, liters	β-Activity, curies	Volume, liters	β-Activity, curies	Volume, liters	β-Activity, curies
2.4×10^5	4.2×10^5	8.1×10^5	$<8.1 \times 10^3$	1.1×10^6	4.2×10^5	8.9×10^5	5	1.9×10^6	4.2×10^5

[a]Defined as wastes containing 5 to 10^3 curies/gal.

[b]Defined as wastes containing 0.001 to 5 curies/gal.

4.0 FLOWSHEETS

4.1 Chemical Flowsheet

The chemical flowsheet is shown schematically in Fig. 10.1. Departures from the flowsheet were minor and were limited mostly to the first two weeks of operation. These were confined to 1) modifying the procedure for adding the scrub solution to the codecontamination cycle extraction column, and 2) the use of Supersol instead of Amsco 125-82 as diluent in the codecontamination cycle during BNL-1. During one short period the scrub stream in the codecontamination cycle was split into two streams; one, ~1 M nitric acid, was added to the top of the scrub column and the second was a 6 M stream added to the aqueous stream (HSW) leaving the scrub column as it entered the top of the extraction column. No improvement in decontamination resulted from this modification and the operation was restored to the usual procedure of adding scrub solution as a single stream to the top of the scrub column.

4.2 Equipment and Sampling Flowsheet

The equipment and sampling flowsheets are shown in Figs. 10.2 through 10.10. Specific data relating to the physical dimensions of the columns and the operating conditions are given in Tables 10.1 and 10.2, respectively.

5.0 PROCEDURE

5.1 Fuel Handling

The Brookhaven fuel as it was originally fabricated consisted of 1.05-in. OD x 4-in. rods assembled in a 10-ft (active length) aluminum tube to which small external cooling fins were attached. After discharge from the reactor and following a decay period, the fins were collapsed on the tubes which were then sheared into 4-in. lengths at the points where adjacent uranium pieces met; each piece then contained one rod which averaged 1167 g of uranium. The shearing operation was conducted at the reactor site and the sheared pieces, still contained in the aluminum sheath, were transferred to shipping casks and transported by truck to the Oak Ridge site. The casks, each holding approximately 100 pieces, were emptied to bins in the Building 3505 storage canal. The debris (fragments, dust, etc.) which had accumulated in the casks during transit from the reactor site was simultaneously removed from the casks; this finely divided material was largely dispersed to the canal water during unloading operations and settled to the canal floor as a sludge and accumulated throughout the program. To date no satisfactory method has been developed to remove and process the sludge or avoid contaminating the canal with it.

The bulk of the fuel pieces arrived as 4-in. sections of uranium rod within a sheath of the original aluminum can, but a significant number of the pieces were observed to occur as partially shattered rods free of sheath; others disintegrated into powder when handled during the dissolver-loading operations.

5.2 Feed Preparation

The fuel pieces were continuously dissolved in 8 M nitric acid after the system was brought to equilibrium. To establish equilibrium on start-up, approximately 200 fuel pieces were charged to the Building 3505 dissolver and 8 M nitric acid added slowly while establishing the pot temperature at about 110°C (reflux condition). The rate of acid addition was carefully regulated to avoid pressurizing the dissolver. Acid addition was continued along with the simultaneous addition of fuel pieces until the uranium concentration of the dissolver solution approached 350 g/liter (indicated by the sp. gr. and confirmed by solution-analysis later) at which time withdrawal of dissolver solution was begun. By this time a total of approximately 1000 kg of uranium metal had been added and the solution volume in the dissolver was approximately 1100 liters. Equilibrium conditions were usually reached in about 24 hr; afterwards the acid-addition rate was controlled automatically by the solution level, which was maintained in the dissolver at about the 1100-liter volume, and the metal addition rate was adjusted to approximately 400 kg U/day (14-15 fuel pieces/hr). At equilibrium, an undissolved metal heel of approximately 700 kg U was present in the dissolver. Dissolver-solution withdrawal was continuous and was maintained at approximately 400 kg U/day equivalent. The dissolver solution was pumped by underground pipeline to the Building 3019 feed collection tank (S-1). At intervals sufficient 13 M nitric acid was added to the collection tank to adjust the acid concentration to approximately 1.5 M and approximately 1000-liter batches were transferred to the accountability measurement tank (S-2) where the adjusted feed solution was carefully mixed and sampled and the volume determined. Approximately 1000-liter batches of the solution were transferred to the feed head tank (S-4). The residual solution (heel) remaining in S-2 was sparged and sampled and the volume determined after each transfer. From these measurements plant input was determined.

Start-up. Solvent extraction operations in each facility were begun by filling the system with the stream which comprised the continuous phase and establishing the stream flows (except for feed) at the rates specified by the flowsheet. After hydrodynamic equilibrium had been established, adjusted feed prepared from nonradioactive feed was introduced to the extraction column in the first cycle of each facility and chemical equilibrium was established over a period of from 12 to 36 hr. After this period feed prepared from Brookhaven reactor fuel was fed to the codecontamination cycle in the Building 3019 facility or from the decontaminated codecontamination cycle product in the Building 3505 facility. Approximately 48 hr was required for the Building 3019 solvent extraction system to come to complete equilibrium while approximately twice this length of time is required in the Building 3505 facility.

Shutdown. Upon completion of the processing of radioactive feed the system was purged essentially free of plutonium and fission products by switching to plutonium-free feed prepared from decontaminated uranium product. When chemical analyses of the product stream from the initial cycle in either facility indicated that plutonium had been essentially exhausted from the system (< 0.001 mg/ml product stream), the plutonium-free feed to the system was discontinued, the scrub stream flow doubled, the extractant rate halved, and the operation continued for about 8-12 hr more to exhaust uranium from the system. All stream flows to the column were then halted. The columns were usually left standing full of the phase normally comprising the continuous phase, but on

occasion the solvent phase was displaced to the spent solvent collection system with dilute nitric acid and the aqueous phase then discharged to the chemical waste system, leaving the columns empty.

5.3 Solvent Extraction

5.3.1 Codecontamination Cycle (Building 3019 Facility)

Adjusted feed was continuously metered to the first cycle extraction column (HA-column) at about 53 liters/hr (400 kg U/day). Uranium and plutonium were extracted with 30 volume per cent TBP in Amsco 125-82 diluent (Supersol was used in BNL-2) which was introduced into the HA-column at the bottom of the extraction section at a rate sufficient to maintain ~80 per cent saturation, i. e., ~174 liters/hr. The organic extract was scrubbed with 3 M nitric acid introduced to the system at the top of the scrub column (HS-column) at the rate of 36 liters/hr. The aqueous stream from the HS-column was lifted to the top of the HA-column by means of a pump.

Aqueous continuous operation was conducted throughout the BNL-1 phase of the program and the first 2 weeks of the BNL-2 phase. Thereafter both the HA- and HS-columns were operated with the organic phase as the continuous phase. The approach to organic-continuous operation was conducted in steps; first, the HS-column was converted to organic continuous operation and later (several days) the HA-column was also converted.

Uranium and plutonium were costripped from the scrubbed organic extract with 0.01 M nitric acid in the two shipping columns (HC- and HC'-columns) operating in parallel. The stripping solution flow rate was 133 liters/hr in each; both HC-columns were operated with the aqueous phase continuous.

The aqueous uranium-plutonium product streams from the HC-columns were continuously steam stripped to remove dissolved and entrained extractant and concentrated to ~350 g U/liter; steam evolved from the evaporators was used in the steam stripping operation. The concentrated product from both evaporators was collected together in one of two collection tanks. When full, the combined stream was switched to the empty tank and the full one sparged and sampled and the volume determined. The concentrated product was transferred in batches to the Building 3505 facility feed hold tank.

Solvent Recovery. Spent solvent from the HC-columns passed to the Building 3019 solvent recovery system. The spent solvent was contacted continuously with 0.25 M aqueous sodium carbonate solution in the 6-in. OD x 19 ft solvent recovery column (T-column). In the BNL-2 phase the solvent was further contacted with aqueous 0.25 M potassium hydroxide in a mixer settler. The spent potassium hydroxide solution, retained in the contactor on a batch basis, was changed at 24-hr intervals.

Waste Handling and Disposal. Aqueous wastes were collected continuously in catch tanks. The process condensate from the product evaporators and the spent sodium carbonate solutions were sparged thoroughly as the catch tank approached 80 per cent of capacity and sampled, and the volume was noted and the contents discharged directly to permanent waste when analytical results indicated no recoverable material was present. The aqueous raffinate (HAWC)

from the HA-column that contained the bulk of the fission products was transferred batchwise from the collection tank to a monitoring tank, sparged thoroughly, sampled, and transferred either to the fission product recovery unit or to permanent waste disposal facilities. If recoverable amounts of plutonium or uranium occurred in this stream it was collected in a recycle waste collection system for reprocessing at the conclusion of the program.

5.3.2 Partitioning and Second Cycles (Building 3505 Facility)

The concentrated uranium solution recovered in the Building 3019 product evaporator was transferred batchwise by underground pipe line to the Building 3505 feed collection tank and adjusted to 2 M nitric acid. The adjusted feed was continuously fed to the extraction column (IA-column) at 54 liters/hr and extracted with 30 volume per cent TBP (in Amsco 125-82 diluent) which was introduced at the bottom of the extraction section at a rate sufficient to maintain the solvent saturation at about 80 per cent, i. e., ~218 liters/hr/ the extract was scrubbed with 3 M nitric acid added at 36 liters/hr to the top of the scrub section. Plutonium was partitioned by preferentially stripping the scrubbed extract in the partitioning column (IB-column) with 0.035 M ferrous sulfamate in 0.1 M nitric acid. This solution was fed to the top of the partitioning section at 30 liters/hr; the aqueous plutonium solution was scrubbed essentially free of uranium with fresh 30 per cent TBP added to the bottom of the scrub section at 30 liters/hr, and passed from the system to the next cycle. The organic stream, containing uranium essentially free of plutonium, passed from the top of the IB-column to the bottom of the stripping column (IC-column), to the top of which was added 312 liters/hr of 0.03 M nitric acid. The aqueous uranium stream passed to an intercycle evaporator which concentrated the uranium to ~400 g/liter. Spent solvent from the IC-column passed continuously to the solvent recovery system.

Second Plutonium Cycle. The aqueous plutonium stream from the IB-column was continuously adjusted to 5.8 M nitric acid-0.1 M sodium nitrite and fed to the second plutonium cycle extraction column (IIA-column) at 54 liters/hr. The plutonium was extracted with 30 per cent TBP introduced at the bottom of the extraction section at 12 liters/hr. The extract was scrubbed with 0.5 M nitric acid added to the top of the scrub section at 6 liters/hr. Plutonium was stripped from the scrubbed extract leaving the IIA-column by 0.05 M hydroxylamine, which was added to the top of the stripping column (IIB-column) at 12 liters/hr. Both the IIA- and IIB-columns were operated with the aqueous phase as the continuous phase.

Ion Exchange: Plutonium Isolation System. The aqueous plutonium product stream from the IIB-column was continuously passed through one of three 7-in.-ID x 18-in. cation exchange resin beds. Process effluent from the resin beds was continuously recycled to the IIBX stream. Residual uranium in the plutonium that sorbed on the resin was selectively eluted from the loaded resin with a 0.25 M sulfuric acid-0.25 M hydroxylamine sulfate mixture. The uranium fraction, which contained minor but significant quantities of plutonium, was recycled to the IB-column for plutonium recovery. The main bulk of the plutonium loaded on the resin beds was eluted with 5.7 M nitric acid, collected in geometrically safe receivers, sparged thoroughly, sampled, and transferred to weighed 5.6-in.-OD polyehtylene bottles. The bottles of plutonium product

solutions were weighed, carefully vented, packaged in cages ensuring safe geometry, and stored in an approved repository until shipment.

Second Uranium Cycle. The concentrated uranium product from the inter-cycle evaporator was continuously adjusted to 2 M nitric acid-0.02 M ferrous sulfamate, and the adjusted solution fed to the second-uranium-cycle extraction column (ID-column) at 52 liters/hr. Uranium was extracted with 30 per cent TBP fed to the bottom of the extraction section at 185 liters/hr. The extract was scrubbed with water added to the top of the 11-ft scrub section at 18 liters/hr; 3 ft from the top of the scrub section 18 liters/hr of 4 M nitric acid was added to give a net of 2 M for the remaining 8 ft of scrubbing. Uranium was stripped from the scrubbed extract with water added to the second-uranium-cycle stripping column (IE-column) at 288 liters/hr. The stripping solution entered the top of the column and the aqueous uranium stream passed from the bottom to a combination steam stripper-evaporator which removed solvent and concentrated the uranium to ~400 g/liter. The concentrate passed continuously through a bed of silica gel to a 2000-gal continuously sparged collection tank (C-7-T) for storage.

Uranium Product Handling and Shipment. Uranium product was shipped off-site in a 2000-gal tank trailer. The solution in collection tank C-7-T was sparged for several hours, sampled, and transferred to the tared tank trailer. During periods of sparging, sampling, and transfer, the uranium product stream from the evaporator was recycled to the adjusted feed tank to permit accurate sampling and volume measurements to be completed. The loaded tank trailer was then weighed and moved off-site.

Waste Collection and Disposal. All aqueous waste effluent streams were collected continuously in catch tanks from which suitable volumes were transferred at intervals to monitoring tanks. The contents of the monitoring tanks were sparged thoroughly and sampled, the volume was determined, and the solution was transferred to the waste storage facilities for permanent disposal. If recoverable amounts of uranium or plutonium were found in the waste stream, it was recycled to the feed tank.

Acid Recovery. The acid recovery system consisted of a 24-in. OD pot still for the initial separation of acid from dissolved solids that fed vapor to the 8th plate of a 24-in.-OD x 14 bubble-plate fractionating tower equipped with a reboiler for acid concentration. The system was operated on a batch basis; aqueous wastes containing nitric acid in concentrations warranting recovery were accumulated until a batch of sufficient size was on hand, after which the system was put into operation. The wastes were evaporated in the pot still to ~0.1 the original volume, the residue being allowed to accumulate; evaporation of the residue was continued, without further addition of feed, to a volume of ~0.05 the feed, governed by the Fe^{3+} concentration which was held to ~0.5 M. The residue was diluted with water to ~0.15 the original feed volume and again evaporated to ~0.05 volume. The final residue was cooled, monitored, and discharged to the waste system. The vapor from the pot still passed to the fractionating tower, from which 6.5 M nitric acid was recovered as bottoms; the overhead fraction was essentially water. Approximately 90 per cent of the acid in the wastes fed to the system was recovered.

Solvent Recovery System. Spent solvent from the IIB-column was continuously combined with the scrubbed extract leaving the IA-column and fed to the IB-column. The spent solvent streams from the IC- and IE-columns were combined and passed continuously to a continuous recirculating pump mix contactor (12-in.-OD x 60-in.-length) to which was added 36 liters/hr of 0.25 M sodium carbonate. The mixed phases were separated in an 18-in. OD x 48-in. phase separator, and the organic stream was acidified with 0.5 M nitric acid in a contactor identical to the one used for the sodium carbonate scrubbing.

6.0 OPERATING SCHEDULE

Solvent extraction operations in the Brookhaven fuel program were begun on February 20, 1959 but were interrupted after 34 days to conduct another priority program; the program was resumed on April 25 and continued for 93 days until the spent fuel inventory at the pilot plant site was exhausted on July 27, 1959. Cleanout operations continued until August 4, 1959. Details of each part of the operation are given in Tables 6.1 and 6.2. A detailed breakdown of the causes for downtime is shown in Table 6.3.

The time schedule of conversions of the HA-, HS-, IA- and ID-columns to organic continuous operation is given in Table 6.4.

Table 6.1. Operating Schedule: BNL-1

Column Operation	Building 3019 Facility		Building 3505 Facility	
	Date (1959)	Time	Date (1959)	Time
Cold feed started	2/20	1200	-	-
Run began; radioactive feed started	2/20	1400	2/25	0630
Run ended; radioactive feed stopped	3/26	1630	3/28	1200
Cold feed stopped	3/27	0430	3/29	1945
Gross operating time, hr	819		718	
Time onstream, hr	588		531	
Onstream efficiency, %	72		74	

Table 6.2. Operating Schedule: BNL-2

Column Operation	Building 3019 Facility		Building 3505 Facility	
	Date (1959)	Time	Date (1959)	Time
Cold feed started	4/25	0720	4/26	1100
Run began; radioactive feed started	4/26	0240	4/27	1300
Run ended; radioactive feed stopped	7/27	1030	8/2	1630
Cold feed stopped	7/28	0230	8/4	0200
Gross operating time, hr	2239		2285	
Time onstream, hr	2233		2135	
Onstream efficiency	99.7%		93.4%	

Table 6.3. Breakdown of Causes for Lost Operating Time

Date (1959)	Causes of Shutdown	Shutdown Period, hr	
		Building 3019	Building 3505
	BNL-1		
3/12	HS-column repair and maintenance	231	
3/16	IA-column modification		187
	Total	231	187
	BNL-2		
5/4	Nitric acid inventory exhausted		14.5
5/11	Repairs to HA- and HS-column pulsers	6.8	
5/18	Power outage (testing)		1.0
5/25	Replace ruptured diaphragm, ID-column pulser		3.0
5/29, 30,31	Power outage (due to weather)		1.0
6/4	ID-column modification		34
6/9	Repair IB-column pulser drive unit		12.0
6/13	Replace diaphragms in IDF and IIBP pumps		3.5
6/26	Replace diaphragm and repair drive on IA-column pulser; replace diaphragm on IAF pump		8.0
7/7	IA-column modifications for operation with external interface		39.5
7/9	Repair IE-column pulser		22.0
7/13	Repair IIBP-pump diaphragm		3.5
7/14	Repair IIA-column pulser and IIBX pump		8.0
	Total	6.8	150

Table 6.4. Column Conversion Schedule: BNL-2

Conversion Date (1959)	Column Converted to Organic-Continuous Operation	Remarks
5/24	HS-column	Liquid-liquid interface lowered until completely absent
6/2	HA-column	Liquid-liquid interface lowered to some point (not specifically known) in the extraction section
6/4	ID-column	Lowered the liquid-liquid interface to the bottom disengaging section
7/6	IA-column	Lowered the liquid-liquid interface to the bottom disengaging section
7/8	IA-column	Modified column to carry liquid-liquid interface in a small external tank

7.0 DECONTAMINATION

Over-all gross gamma and fission product decontamination factors for uranium are shown in Table 7.1; over-all gross gamma decontamination factors for plutonium are shown in Table 7.2. These were determined from radiochemical and ionic analyses of samples withdrawn from typical feeds and products. Activity spectra and ionic compositions of these are shown in Tables 7.3 through 7.6. Gross gamma decontamination factors across the partitioning and second cycles and the silica-gel system are shown in Tables 7.7 through 7.10; gross gamma activities associated with each of the streams and the solvent recovery system are shown in Tables 7.11 through 7.13. These data were determined from analyses of flowing-stream samples withdrawn from the system at 24-hr intervals. Typical contaminant spectra for the uranium and plutonium products are shown in Table 7.14.

Table 7.1. Over-all Decontamination: Uranium

Feed Source HAFA-..[a]	U Product Shipment No.	Decontamination Factors						Pu Separation Factor
		Gross γ	Gross β	Ru	Zr-Nb	Nb	TRE	
BNL-1								
100-1100	S-1	4.3×10^4	-	-	-	-	-	5.2×10^5
1200-2500	S-2	5.0×10^4	-	-	-	-	-	1.7×10^5
2500-3000	S-3	4.7×10^4	-	-	-	-	-	4.2×10^6
3000-3300	S-4	2.0×10^4	-	-	-	-	-	-
Average (BNL-1)	-	4.0×10^4	-	-	-	-	-	1.6×10^6
BNL-2								
400-	S-1	6.9×10^3	7.9×10^4	9.4×10^4	3.1×10^3	-	1.3×10^7	-
100-1600	S-2	1.1×10^4	9.3×10^4	1.1×10^4	4.7×10^3	-	2.6×10^7	-
2400	S-3	2.8×10^4	1.3×10^5	8.8×10^4	5.1×10^3	-	2.2×10^7	2.9×10^4
2800-3200	S-4	8.9×10^4	5.1×10^4	7.9×10^4	2.4×10^4	-	1.9×10^7	5.1×10^4
3700	S-5	8.9×10^4	6.6×10^4	6.5×10^4	2.0×10^4	2.6×10^3	2.5×10^7	9.2×10^4
4500	S-6	7.7×10^4	7.3×10^4	2.7×10^4	1.5×10^4	883	1.7×10^7	2.0×10^4
5500	S-7	8.9×10^4	4.5×10^4	3.0×10^4	1.8×10^4	9.4×10^3	1.9×10^7	1.6×10^4
6600	S-8	1.6×10^4	2.5×10^4	2.0×10^5	2.0×10^5	4.7×10^4	4.8×10^6	2.5×10^4
7900	S-9	1.4×10^5	5.1×10^4	3.5×10^4	1.8×10^5	1.3×10^4	1.1×10^7	1.0×10^4
9000	S-10	1.9×10^5	6.6×10^4	2.2×10^4	1.3×10^5	1.4×10^3	8.2×10^6	2.0×10^4
9000	S-11	1.2×10^5	2.1×10^4	1.4×10^4	1.9×10^5	1.7×10^3	6.4×10^5	1.5×10^4
330A	S-12	1.3×10^5	2.6×10^4	3.3×10^4	3.5×10^5	5.5×10^3	1.8×10^6	1.8×10^4
1300A	S-13	1.0×10^5	2.0×10^4	2.9×10^4	5.6×10^4	5.6×10^3	1.6×10^6	1.0×10^4
2000A	S-14	1.7×10^5	4.3×10^4	5.8×10^4	1.2×10^5	3.7×10^3	9.8×10^6	1.4×10^4
Average (BNL-2)	-	1.0×10^5	6.5×10^4	4.3×10^4	1.0×10^5	9.0×10^3	1.3×10^7	2.9×10^4
Over-all Average	-	9.1×10^4	-	-	-	-	-	-

[a]Feed batch code designation.

Table 7.2. Over-all Decontamination: Plutonium

Source HAFA-..[a]	Product Container, PP-..[b]	Gross Decontamination Factor	Source HAFA-..[a]	Product Container, PP-..[b]	Gross Decontamination Factor
BNL-1			BNL-2 (Cont.)		
100-400	22	9.6×10^5	4000-4200	56	1.6×10^6
400-600	23	1.0×10^6	4300-4500	57	1.2×10^6
600-800	24	1.0×10^6	4600-4800	58	1.0×10^6
900-1100	25	8.9×10^5	4900-5100	59	1.0×10^6
1200-1400	26	8.3×10^5	5200-5400	60	3.8×10^5
1500-1700	27	9.4×10^5	5500-5700	61	1.3×10^6
1700-1900	28	1.3×10^6	5800-6100	62	1.3×10^6
2000-2200	29	1.3×10^6	6200-6500	63	1.0×10^6
2300-2500	30	1.3×10^6	6600-6800	64	7.5×10^5
2600-2800	31	1.1×10^6	6900-7200	65	1.2×10^6
2900-3000	32,33	1.0×10^6	7300-7600	66	8.6×10^5
Average (BNL-1)	-	1.0×10^6	7700-7900	67	1.1×10^6
BNL-2			8000-8300	68	9.4×10^5
100-500	43	5.0×10^6	8400-8800	69	1.1×10^6
600-900	44	1.7×10^6	8900-9100	70	9.4×10^5
1000-1300	45	8.8×10^5	9200-9400	71	7.8×10^5
1300-1500	46	1.1×10^6	9500-9700	72	1.1×10^6
1600-1800	47	1.4×10^6	9800-200A	73	1.2×10^6
1800-2000	48	1.4×10^6	300A-600A	74	1.4×10^6
2100-2300	49	1.5×10^6	700A-1000A	75	1.3×10^6
2300-2500	50	1.4×10^6	1000A-1400A	76	1.0×10^6
2600-2800	51	9.1×10^5	1500A-1900A	77	1.2×10^6
2900-3200	52	1.5×10^6	2000A-2500 A	78,79,82	1.8×10^6
3200-3400	53	4.9×10^5	Average (BNL-2)	-	1.3×10^6
3500-3700	54	1.2×10^6			
3800-3900	55	1.3×10^6	Over-all Average	-	1.2×10^6

[a]Feed batch designation.

[b]Plutonium product batch designation.

Table 7.3. Composition: Codecontamination Cycle Feed

Feed Code HAFA-..	Ionic U, g/l	Ionic Pu, g/l	Ionic H^+, M	Radio-ion, c/m/mg U Gross γ	Gross β	Ru γ	Zr-Nb γ	Nb γ	TRE β
BNL-1									
400	307	0.153	1.58	8.8×10^5	(Radiochemical analyses were not conducted on feeds during BNL-1 program)				
800	345	0.193	2.61	8.9×10^5					
1100	335	0.173	2.50	1.1×10^6					
1600	344	0.159	1.93	7.2×10^5					
2000	363	0.176	1.74	8.7×10^5					
2400	299	0.140	2.68	7.7×10^5					
3000	330	0.153	1.97	7.7×10^5					
3200	370	0.121	2.61	5.9×10^5					
Average	337	0.159	2.20	8.2×10^5	-	-	-	-	-
BNL-2									
400	279	0.100	2.07	1.5×10^6	2.5×10^6	1.6×10^5	6.8×10^5	6.6×10^5	1.8×10^6
1100	369	0.163	1.06	9.4×10^5	2.3×10^6	1.2×10^5	3.4×10^5	4.9×10^5	1.4×10^6
1600	346	0.164	1.39	1.2×10^6	2.2×10^6	1.4×10^5	5.6×10^5	1.3×10^5	1.5×10^6
2400	301	0.167	1.45	1.1×10^6	2.2×10^6	1.1×10^5	2.1×10^5	3.4×10^4	1.4×10^6
2800	296	0.173	1.66	1.2×10^6	2.3×10^6	1.3×10^5	2.3×10^5	4.6×10^4	1.4×10^6
3200	338	0.154	1.33	5.4×10^5	1.2×10^6	7.4×10^4	1.2×10^5	2.2×10^4	8.2×10^5
3700	348	0.164	1.44	1.0×10^6	2.2×10^6	1.3×10^5	1.7×10^5	2.3×10^4	1.5×10^6
4500	351	0.169	1.41	9.1×10^5	1.6×10^6	8.0×10^4	1.4×10^5	6.5×10^4	9.9×10^5
5500[a]	342	0.196	1.68	9.8×10^5	2.0×10^6	1.2×10^5	1.2×10^5	5.8×10^4	1.2×10^6
6600	328	0.181	1.50	9.4×10^5	1.6×10^6	6.6×10^4	4.6×10^5	2.4×10^4	8.7×10^5
7900	304	0.159	1.66	9.5×10^5	1.7×10^6	1.0×10^4	5.1×10^5	1.8×10^4	1.1×10^6
9000	338	0.170	1.55	8.3×10^5	1.2×10^6	4.1×10^4	2.8×10^5	1.8×10^3	5.7×10^5
300A	387	0.168	1.92	9.6×10^5	1.9×10^6	8.6×10^4	4.1×10^5	5.5×10^3	9.9×10^5
1300A	320	0.141	1.71	6.8×10^5	1.2×10^6	4.9×10^4	6.1×10^4	4.2×10^3	8.5×10^5
2000A	298	0.117	1.95	1.0×10^6	1.9×10^6	1.0×10^5	1.4×10^5	1.8×10^4	1.2×10^6
Average	330	0.159	1.59	9.8×10^5	1.9×10^6	9.4×10^4	3.3×10^5	1.0×10^5	1.2×10^6

[a]Organic continuous operation of the HA-column began with this feed batch.

Table 7.4. Composition: Codecontamination Cycle Product

Product Code HCPC-..	Ionic			Radio-ion, c/m/mg U					
	U, g/l	Pu, g/l	H^+, M	Gross γ	Gross β	Ru γ	Zr-Nb γ	Nb γ	TRE β
BNL-1									
500	375	0.137	1.04	9.3×10^3	(Radiochemical analyses of this product not conducted in BNL-1)				
900	373	0.264	1.08	3.6×10^3					
1200	371	0.383	1.29	2.7×10^3					
1700	370	0.153	1.10	5.4×10^3					
2100	364	0.149	1.19	2.8×10^3					
2500	367	0.168	1.32	3.2×10^3					
3100	373	0.183	1.50	5.0×10^3					
3400	367	0.173	1.43	2.7×10^3					
Average BNL-1	370	0.201	1.24	4.3×10^3					
BNL-2									
600	412	0.141	0.64	8.7×10^3	645	111	8.1×10^3	8.2×10^3	1
1800	396	0.167	0.51	5.0×10^3	884	253	4.7×10^3	4.4×10^3	36
2200	418	0.145	0.68	1.3×10^4	4.4×10^3	1.5×10^3	1.0×10^4	4.2×10^3	50
3500	386	0.213	0.51	8.5×10^3	5.6×10^3	3.3×10^3	4.9×10^3	1.8×10^3	23
4100	410	0.069	0.50	3.0×10^3	2.2×10^3	1.0×10^3	1.9×10^3	846	31
4600	408	0.181	0.60	5.2×10^3	3.9×10^3	1.6×10^3	3.2×10^3	1.0×10^3	97
5300	399	0.186	0.71	2.4×10^3	1.1×10^3	489	1.8×10^3	390	7
6400	348	0.177	1.12	4.5×10^3	1.3×10^3	197	4.3×10^3	244	6
7900[a]	372	0.199	0.54	704	381	143	597	-	293
9100	388	0.218	0.54	371	472	170	197	141	116
600A	373	0.198	0.52	651	579	271	410	243	643
1700A	386	0.209	0.54	228	316	113	135	65	34
3600A	396	0.140	0.66	699	523	231	502	93	39
4800A	400	0.167	1.05	263	330	117	135	56	28
5600A	349	0.092	0.51	438	521	289	189	126	26
Average BNL-2	389	0.167	0.64	2.8×10^3	1.5×10^3	652	2.7×10^3	1.4×10^3	95

[a]Recovery of product resulting from organic-continuous operation of HA-column begins with this 1ct of material.

Table 7.5. Composition: Final Uranium Product

Shipment Code	Ionic			Radio-ion, c/m/mg U					
	U, g/l	Pu, ppm U	HNO_3, M	Gross γ	Gross β	Ru γ	Zr-Nb γ	Nb γ	TRE β
BNL-1									
S-1	384.4	0.4	0.45	23	(No radiochemical analyses made on this product in BNL-1)				
S-2	397.0	1.10	0.73	16					
S-3	341.6	0.04	0.45	17					
S-4	341.6	-	0.58	34					
Average, BNL-1	372	0.5	0.55	22.5					
BNL-2									
S-1	379.3	.0041	0.10	220.0	32	1.7	217.0	-	0.13
S-2	410.6	.0110	0.10	98.8	23	11.4	95.4	-	0.06
S-3	437.5	.0176	0.13	39.5	17	1.3	40.4	-	0.06
S-4	410.9	.0113	0.44	9.9	35	1.3	7.5	-	0.06
S-5	424.7	.0059	0.52	11.4	33	2.0	8.5	8.7	0.06
S-6	418.8	.0275	0.63	11.8	22	2.9	8.9	7.4	0.06
S-7[a]	403.7	.0440	1.47	11.1	44	4.0	6.7	6.2	0.06
S-8	437.9	.0285	1.00	6.0	31	2.7	2.2	0.5	0.18
S-9	440.5	.0664	0.85	6.8	33	3.0	2.8	1.4	0.10
S-10	411.6	.0257	0.40	4.5	18	1.9	2.1	1.3	0.07
S-11	412.2	.0333	1.05	7.0	57	2.9	1.5	1.1	0.90
S-12	412.3	.0273	1.00	7.7	72	2.6	1.2	1.0	0.54
S-13	426.1	.0428	1.10	6.4	61	1.7	1.1	0.7	0.53
S-14	420.8	.0285	1.05	5.8	44	1.8	1.2	0.5	0.12
S-15	408.3	-	1.62	6.5	62	4.4	1.8	0.7	0.22
Average, BNL-2	417	.0267	0.76	30.2	39	3.0	26.5	2.7	0.21

[a]Marks the first product collected after converting the HA-column to organic continuous operation. All subsequent material recovered was processed at this condition.

Table 7.6. Composition: Final Plutonium Product

Container (Code PP-..)	Composition				Gross γ, c/m/mg Pu	Pu Isotopic Assay, wt %		
	Pu		U,[c] g/l	HNO_3, M				
	α c/m/ml[a]	g/l[b]				239	240	241
BNL-1								
22	2.7×10^9	33.2	0.06	6.0	2.4×10^3	95.06	4.67	0.27
23	3.3×10^9	40.2	0.02	5.2	2.4×10^3	95.18	4.58	0.24
24	3.1×10^9	39.4	<0.01	4.8	2.0×10^3	95.22	4.54	0.24
25	4.1×10^9	50.3	<0.01	4.8	1.8×10^3	95.13	4.62	0.25
26	3.9×10^9	48.9	<0.01	4.6	1.8×10^3	95.46	4.39	0.15
27	3.5×10^9	43.6	0.18	4.7	1.8×10^3	95.47	4.34	0.15
28	2.6×10^9	32.8	<0.01	5.3	1.7×10^3	95.49	4.35	0.16
29	4.0×10^9	50.9	<0.01	4.0	1.3×10^3	95.49	4.35	0.16
30	3.1×10^9	41.2	<0.01	5.3	1.2×10^3	95.49	4.35	0.16
31	4.0×10^9	48.6	<0.01	5.0	1.3×10^3	95.49	4.35	0.16
32	3.5×10^9	43.7	<0.01	4.7	1.5×10^3	95.49	4.35	0.16
33	4.6×10^9	57.5	0.02	5.3	2.1×10^3	95.49	4.35	0.16
Average, BNL-1	3.5×10^9	45.0	<0.03	5.1	1.8×10^3	95.37	4.44	0.19
BNL-2								
43	3.9×10^9	49.6	1.53	4.2	2.8×10^3	95.36	4.38	0.26
44	3.9×10^9	49.5	<0.01	4.3	2.2×10^3	95.36	4.38	0.26
45	4.4×10^9	58.2	<0.01	4.7	2.6×10^3	95.36	4.38	0.26
46	4.1×10^9	53.1	<0.01	4.6	1.8×10^3	95.36	4.38	0.26
47	4.1×10^9	51.7	<0.01	4.4	1.5×10^3	95.36	4.38	0.26
48	3.7×10^9	47.7	<0.01	4.8	1.5×10^3	95.36	4.38	0.26
49	4.3×10^9	53.3	<0.01	4.5	1.4×10^3	95.36	4.38	0.26
50	4.2×10^9	51.8	<0.01	4.6	1.5×10^3	95.36	4.38	0.26
51	3.8×10^9	46.8	<0.01	4.5	2.4×10^3	95.36	4.38	0.26
52	4.2×10^9	53.2	<0.01	4.4	1.5×10^3	95.36	4.38	0.26
53	2.5×10^9	32.9	<0.01	4.2	4.3×10^3	95.20	4.54	0.26

[a]Pu(TTA) method.

[b]Potentiometric ceric sulfate method.

[c]Polarographic method.

Table 7.6. Composition: Final Plutonium Product (Continued)

Container (Code PP-..)	Composition: Pu α c/m/ml[a]	Composition: Pu g/l[b]	Composition: U,[c] g/l	Composition: HNO_3, M	Gross γ, c/m/mg Pu	Pu Isotopic Assay, wt %: 239	Pu Isotopic Assay, wt %: 240	Pu Isotopic Assay, wt %: 241
BNL-2 (Cont.)								
54	4.2×10^9	51.6	< 0.01	4.3	1.7×10^3	95.20	4.54	0.26
55	3.2×10^9	40.3	<0.01	4.5	1.8×10^3	95.20	4.54	0.26
56	4.1×10^9	51.2	<0.01	4.6	1.4×10^3	95.20	4.54	0.26
57	3.9×10^9	49.0	<0.01	4.6	1.7×10^3	95.20	4.54	0.26
58	3.3×10^9	41.8	<0.01	4.6	1.9×10^3	95.20	4.54	0.26
59	4.0×10^9	49.8	<0.01	4.6	1.7×10^3	95.20	4.54	0.26
60	4.2×10^9	52.0	<0.01	4.5	3.8×10^3	95.20	4.54	0.26
61	4.4×10^9	53.4	<0.01	4.8	1.5×10^3	95.20	4.54	0.26
62	3.9×10^9	48.3	<0.01	4.9	1.7×10^3	95.20	4.54	0.26
63	4.1×10^9	51.3	<0.01	4.3	1.6×10^3	95.19	4.57	0.24
64	3.5×10^9	43.8	<0.01	4.3	2.5×10^3	95.19	4.57	0.24
65	3.5×10^9	43.6	<0.01	4.4	1.4×10^3	95.19	4.57	0.24
66	4.0×10^9	49.3	<0.01	4.4	1.4×10^3	95.19	4.57	0.24
67	2.9×10^9	36.1	<0.01	3.2	1.7×10^3	95.19	4.57	0.24
68	3.1×10^9	38.2	<0.01	3.6	1.8×10^3	95.19	4.57	0.24
69	5.1×10^9	63.1	< 0.01	4.0	1.4×10^3	95.19	4.57	0.24
70	3.8×10^9	47.3	< 0.01	4.2	1.6×10^3	95.19	4.57	0.24
71	3.6×10^9	45.0	< 0.01	4.2	1.8×10^3	95.19	4.57	0.24
72	4.4×10^9	54.8	< 0.01	4.4	1.5×10^3	95.19	4.57	0.24
73	4.0×10^9	49.4	< 0.01	4.5	1.3×10^3	95.22	4.52	0.26
74	4.1×10^9	51.1	<0.01	3.9	1.2×10^3	95.22	4.52	0.26
75	3.8×10^9	46.8	< 0.01	4.3	1.2×10^3	95.22	4.52	0.26
76	3.8×10^9	48.7	< 0.01	4.5	1.4×10^3	95.78	4.00	0.22
77	3.7×10^9	47.1	<0.01	4.4	1.3×10^3	95.78	4.00	0.22
78	3.9×10^9	50.9	< 0.01	4.4	1.3×10^3	95.78	4.00	0.22
79	3.9×10^9	49.6	<0.01	4.5	1.5×10^3	95.78	4.00	0.22
82	8.7×10^8	11.0	0.03	3.6	1.2×10^3	95.78	4.00	0.22
Average, BNL-2	3.8×10^9	47.7	<0.05	4.4	1.8×10^3	95.32	4.43	0.25
Average, Over-all	3.7×10^9	46.4	<0.04	4.8	1.8×10^3	95.35	4.44	0.22

[a] Pu(TTA) method.

[b] Potentiometric ceric sulfate method.

[c] Polarographic method.

Table 7.7. Decontamination Factors: Codecontamination Cycle

Program	Source, HAFA-..	Product, HCPC-..	Decontamination Factors					
			Gr γ	Gr β	Ru γ	Zr-Nb γ	Nb γ	TRE β
BNL-1	400	500	100	-	(No data taken)			
	800	900	250					
	1100	1200	400					
	1600	1700	130					
	2000	2100	310					
	2400	2500	240					
	3000	3100	150					
	3200	3400	220					
	Average, BNL-1		230					
BNL-2	400	600	170	3880	1440	80	80	1.8×10^6
	1100	1800	190	2600	470	70	110	3.8×10^4
	1600	2200	90	500	90	60	30	3.0×10^4
	2400	3500	140	410	30	40	20	6.1×10^4
	2800	4100	400	1050	130	120	50	4.5×10^4
	3200	4600	100	310	50	40	20	8.5×10^3
	3700	5300	420	2000	120	90	60	2.1×10^5
	4500	6400	200	1230	60	30	270	1.7×10^5
	Average[a]		210	1500	300	70	80	2.9×10^5
	5500	7900	1390	5250	840	200	-	4.1×10^3
	6600	9100	2530	3390	390	2340	170	7.5×10^3
	7900	600A	1460	2940	40	1240	70	1.8×10^3
	9000	1700A	3640	3800	350	2070	30	1.7×10^4
	300A	3600A	1370	3630	370	820	60	2.5×10^4
	1300A	4800A	2590	3640	410	450	80	3.0×10^4
	2000A	5600A	2280	3650	350	740	140	4.6×10^4
	Average[b]		2180	3760	390	1120	90	2.0×10^4
	Average, BNL-2		1200	2600	350	600	90	9.5×10^4
Over-all Average[c]			870	2600	350	600	90	9.5×10^4

[a]The extraction column (HA-) was operated aqueous continuous to this point.

[b]For organic continuous operation of the extraction column.

[c]Gross gamma includes only BNL-1;all other columns are for BNL-2 only.

Table 7.8. Decontamination Factors: Partitioning Cycle

Program	Feed Source, HAFA-..	Product Code, IDFC-..	Gross Gamma Decontamination Factors
BNL-1	3-12	1- 7	76
	13-30	8-14	20
	31-38	15-18	15
	39-47	19-21	65
	Average, BNL-1	-	45
BNL-2	1-10	1- 8	9
	11-26	9-22	10
	27-29	23-33	20
	40-51	34-42	20
	52-61	43-48	20
	62-72	48-54	40
	73-87	55-61	20
	88-98	62-67	35
	99- 9	68-73	30
	9-18	74-78	30
	19-30	79-83	30
	31-47	84-91	15
	48-58	92-98	55
	59-67	99- 6[a]	2.8×10^3
	68-71	6-13[a]	1.1×10^4
	Average,[b] BNL-2	-	25
Over-all Average		-	35

[a]Codecontamination cycle feed pumped directly to partitioning cycle.

[b]Excluding the runs in which codecontamination cycle feed was pumped to the partitioning column.

Table 7.9. Decontamination Factors: Second Uranium Cycle

Program	Feed Source, IDFC-..[a]	Product Code, IEUC-..[a]	Gross Gamma Decontamination Factors
BNL-1	1- 7	1- 5	10
	8-14	6-12	10
	15-18	13-17	10
	19-21	18-26	10
	Average, BNL-1	-	10
BNL-2	1- 8	1- 7	3
	9-22	8-20	2
	23-33	21-32	5
	34-42	33-39	6
	43-48	40-45	7
	48-54	46-51	6
	55-61	52-58	4
	62-67	59-64	2
	68-73	65-70	3
	74-78	71-74	4
	79-83	75-79	2
	84-91	80-84	6
	92-98	85-91	2
	99- 6	92-98	3
	7-13	99- 7	4
	Average, BNL-2	-	4
Over-all Average		-	7

[a]Average of batches, inclusive.

Table 7.10. Decontamination Factors: Silica Gel System

Program	Feed Source, IEUC-..[a]	Product Shipment Code, S-..	Gross Gamma Decontamination Factors
BNL-1	1- 5	1	2
	6-12	2	3
	13-17	3	2
	18-26	4	2
	Average, BNL-1	-	2
BNL-2	1- 7	1	4
	8-20	2	4
	21-32	3	3
	33-39	4	5
	40-45	5	4
	46-51	6	2
	52-58	7	2
	59-64	8	2
	65-70	9	1
	71-74	10	1
	75-79	11	1
	80-84	12	1
	85-91	13	1
	92-98	14	1
	99- 7	15	1
	Average, BNL-2	-	2
Over-all Average		-	2

[a]Batches, inclusive.

Table 7.11. Gross Activity: Partitioning and Second Cycle Feeds

Program	Partitioning Cycle Feed, IAF-..[a]	Gross γ, c/m/mg U	Second Cycle Feed, IDFC-..[a]	Gross γ, c/m/mg U
BNL-1	3-12	4.3×10^4	1- 7	570
	13-30	6.8×10^3	8-14	330
	31-38	5.0×10^3	15-18	370
	39-47	3.1×10^4	19-21	480
	Average, BNL-1	2.1×10^4	-	480
BNL-2	1-10	2.9×10^4	1- 8	3.0×10^3
	11-26	1.0×10^4	9-22	840
	27-39	1.0×10^4	23-33	550
	40-51	5.4×10^3	34-42	260
	52-61	5.3×10^3	43-48	280
	62-72	4.6×10^3	48-54	120
	73-87	1.7×10^3	55-61	90
	88-98	990	62-67	30
	99- 9	650	68-73	20
	10-18	580	74-78	20
	19-30	510	79-83	20
	31-47	650	84-91	50
	48-58	590	92-98	10
	59-67	6.1×10^4[b]	99- 6[c]	20
	68-71	2.6×10^5[b]	6-13	20
	Average, BNL-2	2.6×10^4	-	360
Over-all Average		2.4×10^4	-	400

[a]Batches, inclusive.

[b]Codecontamination cycle feed fed directly to the partitioning cycle.

[c]Second series.

Table 7.12. Gross Activity: Second Uranium Cycle and Final Uranium Products

Program	Second Uranium Cycle Product, IEUC-..[a]	Gross γ, c/m/mg U	Final Uranium Product, S-..	Gross γ, c/m/mg U
BNL-1	1- 5	50	1	20
	6-12	50	2	20
	13-17	30	3	20
	18-26	70	4	30
	Average, BNL-1	50	-	20
BNL-2	1- 7	940	1	220
	8-20	390	2	100
	21-32	110	3	40
	33-39	450	4	10
	40-45	40	5	10
	45-51	20	6	10
	52-58	20	7	10
	59-64	10	8	6
	65-70	8	9	7
	71-74	5	10	5
	75-79	7	11	7
	80-84	8	12	8
	85-91	6	13	6
	92-98	8	14	6
	99- 7	6	15	6
	Average, BNL-2	110	-	30
Over-all Average		80	-	25

[a]Batches, inclusive.

Table 7.13. Codecontamination Cycle Solvent Recovery System: Composition and Decontamination

Program	(1959) Date	Spent Solvent Gross γ, c/m/ml	Recovered Solvent Gross γ, c/m/ml	Recovered Solvent TBP, Vol. %	Gross Gamma Decontamination Factor
BNL-1	March				
	22	5.7×10^4	8.1×10^4	-	0.7
	23	3.9×10^3	7.5×10^3	-	0.5
	25	4.7×10^4	8.7×10^3	-	5.4
	27	7.3×10^3	4.2×10^3	-	1.7
	Average, BNL-1	2.9×10^4	2.5×10^4	-	2
BNL-2	April				
	25-28	5.9×10^5	-	-	-
	May				
	1- 8	2.6×10^5	1.9×10^4	33.1	15
	9-16	1.6×10^5	5.1×10^3	30.1	30
	17-24	1.7×10^5	1.5×10^4	-	11
	25-31[a]	2.2×10^5	1.5×10^4	31.5	15
	June				
	1- 8[b]	8.8×10^4	2.3×10^4	31.5	4
	9-16	3.8×10^4	2.2×10^4	30.7	2
	17-24	4.7×10^4	3.5×10^4	30.3	1
	25-30	3.5×10^4	4.6×10^4	30.0	0.8
	July				
	1- 8	2.3×10^4	2.1×10^4	29.7	1
	9-16	6.4×10^4	3.7×10^4	30.6	2
	17-24	$6.5 - 10^4$	3.3×10^4	30.8	2
	25-28	6.4×10^4	5.2×10^4	31.1	1
	Average, BNL-2	1.4×10^5	2.7×10^4	30.9	7
Over-all Average		8.5×10^4	2.6×10^4	30.9	5

[a]HS-column converted to organic continuous operation on May 24.

[b]HA-column converted to organic continuous operation on June 2.

Table 7.14. Contaminants in Uranium and Plutonium Products

Contaminant, ppm	Uranium Product			Plutonium Product		
	BNL-1	BNL-2[a]	Average	BNL-1	BNL-2	Average
Al	7		7	192	275	230
B	3		3	-	< 30	< 15
Ca	20		20	-	-	-
Cr	< 2[b]		< 2	-	< 25	< 15
Cu	2		2	-	< 200	< 100
Fe	< 14[b]		< 14	d	< 60	< 30
Mn	4		4	-	< 25	< 15
Mo	-[c]		-	-	< 125	< 75
Ni	< 1[b]		< 1	-	< 125	< 75
Si	16		16	Not Sought		
Ti	-[c]		-	-	< 125	< 75
Zr	-[c]		-	-	< 125	< 75

[a]Not examined.

[b]Symbol <.. indicates limit of detection.

[c]Symbol - indicates contaminant was sought but not found.

[d]Sample known to have become contaminated with Fe (6.3×10^4 ppm) after withdrawal from product solution.

8.0 ACCOUNTABILITY MEASUREMENTS

Plant input measurements were conducted in accordance with the Accountability Measurements phase of the Power Reactor Fuel Processing Pilot Plant program. The Accountability Measurements Program has as its objectives, 1) the development and demonstration of techniques and methods for precise measurement of Source and Special Nuclear Materials (SSNM) in spent reactor fuel, and 2) determination of the limits of error in such measurement. Details of the Accountability Measurements Program are given in a progress report.[1] The material balance for the BNL program is shown in Table 8.1; limits of error are included.

8.1 Plant Input Measurements

Plant input was measured by determining the uranium and plutonium concentration of measured volumes of dissolver solution transferred to the solvent extraction system. Analytical procedures are given in Sec. 8.1.3.

8.1.1 Volume Measurements

The volume of the radioactive dissolver solution was measured in a calibrated accountability measurement vessel described below. Correction for temperature variations were made in all cases.

Accountability Measurement Vessel. Shown schematically in Fig. 8.1 is the accountability measurement vessel (S-2) as installed. Located inside heavy shielding, it consists of a 2000-liter vessel with a reversed dish bottom and standard dish top. It is equipped with (1) dual lines of pneumatic instrumentation for remotely indicating and recording liquid level and density; (2) temperature indicator; (3) air sparger; (4) heat transfer surfaces; and (5) a recirculating sampler. The instrument assembly of this vessel receives special maintenance for sensitivity, response, linearity, and detection of drift from zero. A permanent manometer installation permits rapid precise measurement of both the primary and the amplified signals for comparison with the indicated readings.

Calibration. The vessel was calibrated with both water and an aqueous uranyl nitrate solution of approximately dissolver solution composition. Weighed increments of solution were added and the corresponding liquid levels noted. Similarly, weighed amounts of solution were removed from the vessel and a second calibration was made. Plotting of these data gave two curves, one for filling and another for emptying (Fig. 8.2). The curves almost coincide at the 1600-liter volume (40 per cent true liquid level) but diverge at the lower volumes; at the 400-liter volume (true liquid level 4 per cent) the difference in the two curves is ~18.5 liters. The limit of error for both calibration curves was twice as high in emptying the vessel as in filling; at 400 liters the limit of error is 0.7 per cent for filling and 1.3 per cent for emptying, while at 1400 liters the limit is 0.2 and 0.3 per cent, respectively. However, in a typical transfer of 1000 liters, taken as the difference in the 1400- and 400-liter volumes measured while emptying the tank, the limit of error for a single measurement is ± 0.5 per cent.

UNCLASSIFIED
ORNL-LR-Dwg. 37866
R-1

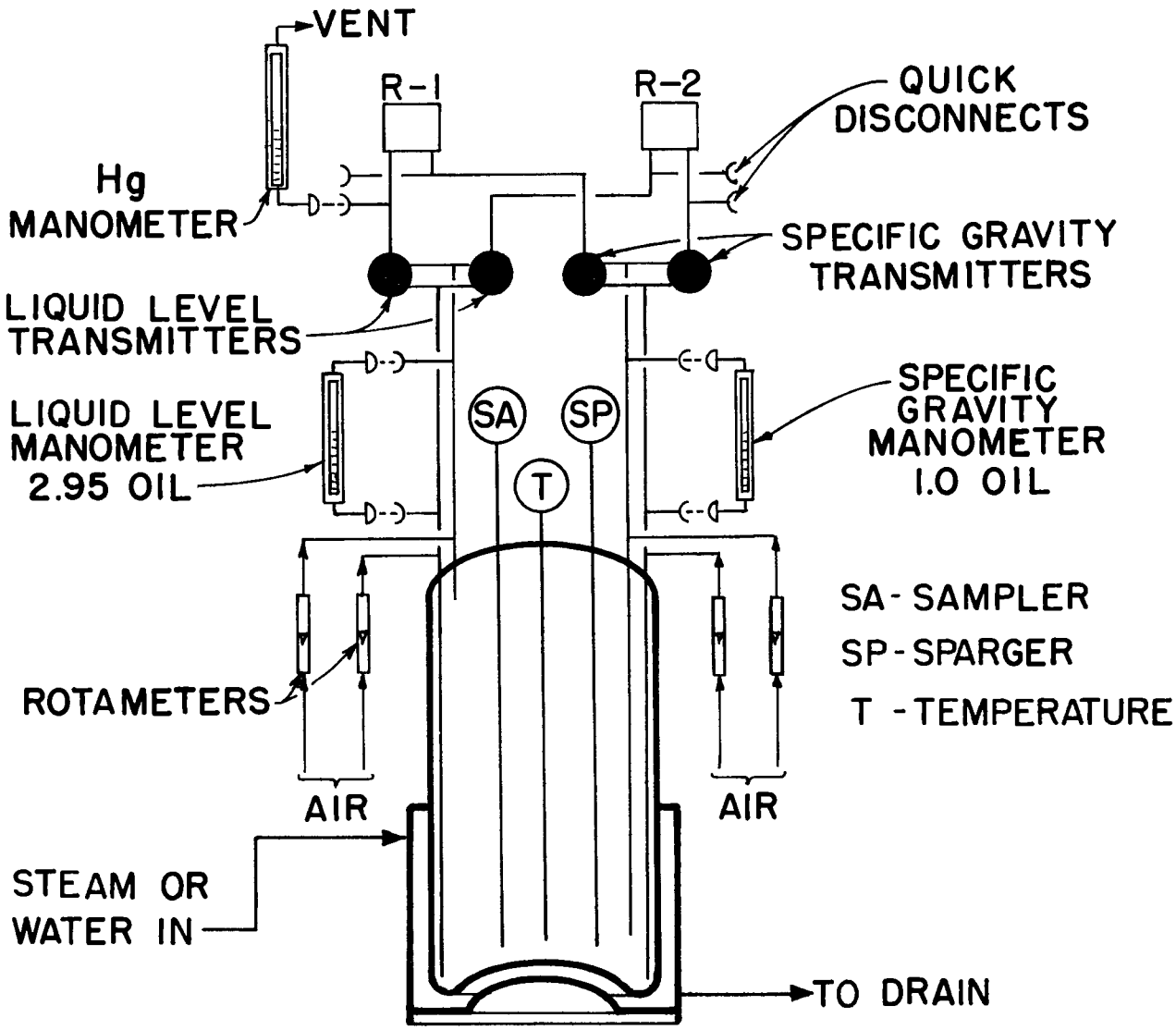

Fig. 8.1. Schematic View of S-2 Instrumentation.

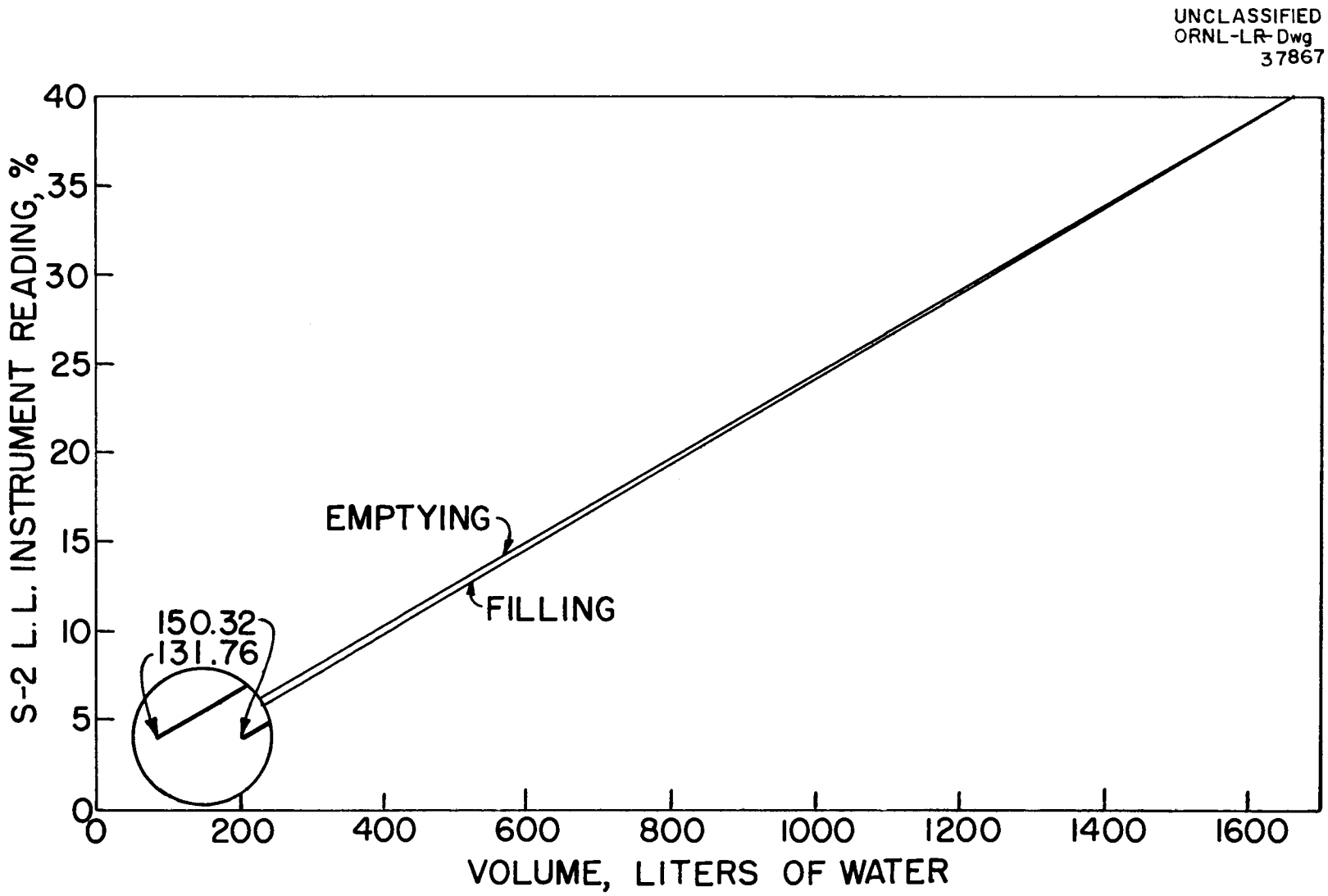

Fig. 8.2. S-2 Calibration.

Table 8.1. Material Balance: BNL Program

Phase	SSNM Charges		Feed Measurements[a]		Products[b]		Waste Measurements[b]		Difference Feed to Recovery + Loss - Gain	
	U, kg	Pu, g	U, kg	Pu, g	U, kg	Pu, g	U, kg	Pu, g	U, kg	Pu, g
BNL-1	9,818	5,163	9,731 ± 255	4,610 ± 105	9,484 ± 47	4,570 ± 14	170 ± 25	38 ± 10	80 ± 264	2 ± 106
BNL-2	38,239	19,573	37,063 ± 790	17,546 ± 236	37,139 ± 186	17,995 ± 54	418 ± 63	144 ± 36	-494 ± 816	-593 ± 245
Total	48,057	24,736	46,794 ± 824	22,156 ± 228	46,623 ± 192	22,565 ± 56	588 ± 68	182 ± 37	-414 ± 854	-591 ± 269

[a]Limits of error determined statistically.

[b]Limits of error assumed (based on past experiences) for U and Pu in products to be ± 0.3 and ± 0.5 per cent, respectively; similarly, those in the waste stream were assumed to be ± 15 and ± 25 per cent.

8.1.2 Sampling

Homogeneity. Homogeneity of the tank contents was ensured by air sparging the solution for 0.5 hr minimum. It was found by experiment that in overlaying 900 liters of uranyl nitrate solution (200 g U/liter) with 250 liters of uranyl nitrate solution of 360 g/liter, adding 250 liters of water, air sparging the mixture for several successive 15-min intervals, and sampling after each, no change in composition was detectable within the limits of experimental error after the first 15 min of sparging.

Sampling Procedure. Representative samples were withdrawn from the accountability measurement vessel by means of a recirculating sampler that features the airlift principle. It was determined experimentally that representative samples are withdrawn after about 15 min of recirculation. In normal practice three samples are withdrawn for each duplicate set. The first sample (most likely to be contaminated) was discarded and the second and third submitted for analysis.

Two sets of duplicate samples were withdrawn for analyses in conducting a measurement of material to the plant, one before the transfer of a measured volume of dissolver solution from S-2 and the second after the transfer was completed. One sample of each set was analyzed immediately and the other stored. The difference in the uranium and plutonium concentration as indicated by analyses of the before-and-after-samples were held to 7.25 and 7.4 per cent, respectively, in the BNL-1 portion of the program and to 5.8 and 7.8 per cent, respectively, in the BNL-2 portion. When this range was exceeded the second set of samples was analyzed.

8.1.3 Analytical Procedures

Samples withdrawn from lots of dissolver solution were transferred by shielded conveyor to the High Level Analytical Facility (HLAF). Here, behind heavy concrete shielding, were provided storage space for samples as well as equipment for centrifuging, preparation of aliquots, specific gravity determinations, weighing, etc. All samples containing dispersed solids or liquids were routinely centrifuged and only clear supernatant solution was analyzed.

Analytical procedures used in determining the fertile-fissionable material content of feed solutions are listed along with the limits of error as follows:

Uranium. Depleted (< 1 per cent combined U-235-U-233): Spectrophotometric ammonium thiocyanate method; limit of error ± 4 per cent.

Plutonium. Thenoyltrifluoracetone (TTA) extraction method; limit of error ± 2.5 per cent (requires that the specific activity of the plutonium be known).

8.2 Plant Output

Plant output was determined from measurements of the uranium and plutonium content of the recovered products and of the waste streams.

8.2.1 Volume Measurement

Product Solutions. The volume of product solutions was measured by applying laboratory-determined density measurements to weighed quantities of solution; limit of error, ± 0.3 per cent.

Waste Solutions. The volume of waste solutions was determined from liquid-level and density data obtained with the remote pneumatic-type instruments installed in the previously calibrated plant catch tanks; limit of error, ± 2 per cent.

8.2.2 Analytical Procedures

Product Solutions

Uranium. Automatic potentiometric ferric sulfate method; limit of error ± 0.2 per cent.

Plutonium. Potentiometric ceric sulfate method; limit of error, ± 0.5 per cent.

Waste Solutions

Highly radioactive waste solutions were analyzed for uranium and plutonium content by the following methods:

Uranium. Fluorimetric method; limit of error, ± 10 per cent (< 0.01 g/liter).

Plutonium. Thenoyltrifluoracetone method; limit of error ± 15 per cent (< 0.0001 g/liter). The specific activity of the plutonium may be satisfactorily estimated from the irradiation history of the fuel.

Isotopic Assay. The isotopic ratios of uranium and plutonium were determined with a mass spectrograph featuring the thermal emission method. The limit of error by direct measurement is ± 0.01 per cent for uranium isotopes and ± 0.5 per cent for those of plutonium.

8.3 Material Balance

The material balance for each phase of the BNL program completed to date is given in Table 8.1. The limits of error associated in measuring the plant input are included that were determined by statistical treatment.[1] The limits of error in the product and in the waste streams were calculated based on the experience that uranium and plutonium measurements in the products were ± 0.3 and ± 0.5 per cent, respectively, and those in the waste streams were ± 15 and ± 25 per cent.

The difference noted between feed and product-plus-loss measurements reflect the relatively larger uncertainties in the feed measurement. The contribution of the uncertainty associated with waste measurements to the uncertainty associated with the product-plus-loss measurement is relatively small, although it may itself be rather large percentagewise.

The differences between the accountability office charges and feed measurements reflect principally the loss of active material to the storage-canal sludge, which was not processed. The charges by the accountability offices also are based on the assumption that uniform lengths of sheared rod were shipped, that no fragmentation occurred during the shearing operation at the reactor site, and that all pieces shipped consisted of active material. During dissolver-charging operations, occasionally aluminum sheaths containing no uranium rod were found; also at times the uranium piece disintegrated into powder as it was grasped with the loading tongs.

9.0 WASTE DISPOSAL

More than 99 per cent of the high-radiation-level wastes were generated in the codecontamination cycle. The activity appeared principally in the aqueous raffinate from the extraction column at an average level of 1.76 curies/liter based on gross β measurements (Table 9.1). Activity levels in all other streams were a factor of 10 or more lower than in the codecontamination cycle extraction column raffinate.

A total of 4.8×10^4 liters of codecontamination cycle extraction column aqueous raffinate was transferred to the Fission Product Recovery plant during the BNL-1 phase of the program; during the BNL-2 phase the amount was 1.7×10^5 liters. The remaining volume in each program was transferred directly to the permanent waste storage facilities.

10.0 APPENDIX

10.1 Chemical Flowsheet

The chemical flowsheet is shown in Fig. 10.1. Average compositions of the streams and the flow ratios are shown in Table 10.1.

10.2 Equipment Flowsheet

Equipment flowsheets for the power reactor fuel processing pilot plant complex are shown in Figs. 10.2 through 10.10.

10.3 Equipment Data

10.3.1 Pulsed Columns

Pulsed column dimensions and capacities are given in Table 10.2; operating data are given in Table 10.3.

10.3.2 Ion Exchange System

The ion-exchange system consisted of three 7-in.-ID x 18-in.-deep beds of Dowex 50 cation resin, 12 per cent cross linked, each resin bed containing 8.5 liters of resin which was spring loaded to compensate for expansion. The columns were fabricated from Schedule 40 stainless steel pipe and were mounted on 2-ft centers 2-ft out from the wall.

10.3.3 Evaporators

Codecontamination Cycle Product Evaporator. The codecontamination cycle product evaporators, fabricated from type 347 stainless steel, were of the

Table 9.1. Waste Disposal: Volumes and Activities

Program	Codecontamination Cycle						Partitioning and Second Cycles Intermediate Level[b]		Combined Totals. all cycles	
	High Level[a]		Intermediate Level[b]		Total					
	Volume, liters	β-Activity, curies	Volume, liters	β-Activity, curies	Volume, liters	β-Activity, curies	Volume, liters	β-Activity, curies	Volume, liters	β-Activity, curies
BNL-1	5.8×10^4	1.0×10^5	1.7×10^5	$< 1.7 \times 10^3$	2.3×10^5	1.0×10^5	2.1×10^5	1	4.4×10^5	1.0×10^5
BNL-2	1.8×10^5	3.2×10^5	6.4×10^5	$< 6.4 \times 10^3$	8.2×10^5	3.2×10^5	6.8×10^5	4	1.5×10^6	3.2×10^5
Total	2.4×10^5	4.2×10^5	8.1×10^5	$< 8.1 \times 10^3$	1.1×10^6	4.2×10^5	8.9×10^5	5	1.9×10^6	4.2×10^5
Avg/kg U Processed[c]	5	9	17	0.2	22	9	19	1×10^{-4}	41	9

[a]Defined as waste containing 5 to 10^3 curies activity per gal; consists entirely of the extraction column (HA-) raffinate, averaging 1.76 curies/liter based on gross β measurement.

[b]Defined as wastes containing 0.001 to 5 curies activity per gal; combined streams average activity < 10 mc/liter.

[c]Total U processed = 4.68×10^4 kg at an average concentration of 0.330 kg/liter.

natural circulation type; each consisted of a 25-ft^2 flanged Manning and Lewis heat exchanger included in a loop of 3-in. pipe and a 24-in.-OD x 24-in. flash chamber fitted with an internal splash plate. The vapor from the flash chamber was conducted to the steam stripper, which consisted of a 15-in.-dia x 66-in. section packed to a depth of ~40 in. with 0.5-in. stainless steel Raschig rings. The vapor rose counterflow to the evaporator feed, which was distributed over the top of the packing. The entire stripping section was enclosed in a 24-in.-dia x 72-in. vessel which provided a liquid seal at the bottom of the packed section that formed a bypass to the condenser in the event the pressure drop across the packing became excessive as a result of fouling.

Partitioning Cycle Intercycle Evaporator. The intercycle evaporator was of the natural circulation type and consisted of a feed stream preheater, a 50-ft^2 heat exchanger as reboiler, and a 30-in. dia x 8 ft-4-in. vapor head equipped with four 28-bubble-cap plates spaced 1 ft apart. Tubes in the reboiler heat exchanger were fabricated from type 347 stainless steel.

Second Uranium Cycle Product Evaporator. This piece of equipment served both as a steam stripper and as an evaporator. It consisted of a 30-in. dia x 19-ft-high tower containing 14 plates (28 bubble caps each) spaced 9 in. apart and a reboiler section. Feed entered the evaporator at the third plate from the top.

10.3.4 Silica Gel System

Two 6-in.-dia x 48-in. silica gel beds piped for operation singly or in parallel were provided. The beds consisted of refrigeration grade 20-40 mesh silica gel.

10.3.5 Acid Recovery System

The acid recovery system consisted of a 24-in.-dia pot evaporator equipped with a 24-ft^2 titanium steam coil that fed vapor to the 8th plate of a 24-in.-dia bubble cap fractionating tower containing 14 trays, each fitted with 18 bubble caps; the reboiler was heated with a 3-ft^2 steam heater of the bayonet type fabricated from tantalum. Overhead vapor from the tower was condensed in a tube-and-shell heat exchanger consisting of 0.75-in.-OD x 18-Bwg x 6-ft-long type 347 stainless steel tubes providing a total of 50 ft^2 of heat transfer surface.

10.4 Solvent Losses

A summary of solvent losses occurring during the BNL-2 program is shown in Table 10.4 and 10.5, listed according to the cycle involved and arranged to show the distribution according to the source of loss, with each related to the uranium processed.

Based on the average total solvent stream flow of 178 liters/hr in the codecontamination cycle and 515 liters/hr in the partitioning and second cycles, the total solvent pumped during the BNL-2 program was 4.8×10^5 and 1.4×10^6 liters, respectively. The over-all solvent loss was 0.39 and 0.26 per cent, respectively, of the total pumped in the codecontamination cycle and in the partitioning and second cycles. Similarly, solvent losses due to solvent extraction alone were 0.11 and 0.07 per cent.

The solvent inventory maintained in the codecontamination cycle was about 3800 liters; that in the partitioning and second cycle system, 1500 liters.

Table 10.1. Average Stream Composition and Flow Ratios

Stream Code	Composition											Flow Rate	
	U, g/l	Pu, g/l	HNO_3, M	NH_2SO_3H, M	Fe^{+2}[a], M	Na_2CO_3, M	$NaNO_2$, M	HYE,[b] M	TBP, volume %	NaOH, M	H_2SO_4, M	liters/hour	Relative Volume HAF = 100
HAFA	332	0.159	1.80									54.1	100
HAS			3.0									36.0	66
HSS			1.0									36.0	66
HAX									30			1.75	323
HAW	<0.01	<0.001	1.50									90	166
HCX			0.01									133	246
HC'X			0.01									133	246
HCP	63.4	0.03	0.12									133	246
HC'P	63.4	0.03	0.12									133	246
HCPW			~0.01									260	480
HCPC	382	0.179	0.85									47	87
HCW	<0.01								30			175	323
HC'W	<0.01								30			175	323
HTX						0.2						18	33
HTX'						0.2						18	33
HTW						0.2						36	66
IAF	310	0.142	1.98									56.2	104
IAS			3.0									38.4	71
IAX									30			240	444
IAW	<0.01	<0.001										95.5	175
IBS									30			28.4	52
IBX			0.1		0.035							42.7	79
ICX			Water									360	666
IC Purge			Water									30.3	56
ICU	50	-	0.05									370	683
IDF	320	-	1.48		0.02							58	103

[a] $Fe(NH_2SO_3)_2$.

[b] $NH_2OH \cdot 1/2\ H_2SO_4$.

Table 10.1. Average Stream Composition and Flow Ratios (Continued)

Stream Code	Composition											Flow Rate	
	U, g/l	Pu, g/l	HNO_3, M	NH_2SO_3H, M	Fe^{+2}[a], M	Na_2CO_3, M	$NaNO_2$, M	HYE,[b] M	TBP, volume %	NaOH, M	H_2SO_4, M	liters/hour	Relative Volume HAF = 100
IDS			1.0									35.4	65
IDX									30			233.0	431
IDW	0.20	-	1.5		0.03							117	216
IEX			Water									328.5	607
IE Purge			Water									28.8	53
IEW												233	431
IEU	60		0.01									367	679
TEP	410	<0.0001	0.7									158	292
IBP	-	0.10	1.5		0.04							42.7	79
IIAF	-	0.05	6.0				0.10					74	137
IIAS			0.5									7	13
IIAW	<0.01	<0.001	5.5				0.09					81	150
IIAX									30			14	26
IIBX								0.05				14	26
IIB Purge									30			7	13
IIBW									30			21	39
IIBP	<0.001	0.5	0.2									14	26
IIBPW	<0.001	<0.001	0.10									21	39
SX						0.4						59	109
U-Eluant								0.25			0.25	Batch	-
Pu-Eluant			5.7	0.3								Batch	-

[a] $Fe(NH_2SO_3)_2$.

[b] $NH_2OH \cdot 1/2\ H_2SO_4$.

Table 10.2. PulsedColumn Dimensions and Capacities

Column	Dimensions					Operating Volume, liters[b]	
	ID, in.	Effective Sections, ft[a]					
		Extraction	Scrub	Partitioning	Strip	Organic	Aqueous
Building 3019							
HA-	5.05	17	17	-	-	~175[c]	~45
HS-	5.05	-	12	-	-	80[c]	23
HC-1[d] (R-1)	5.05	-	-	-	19.7	135	128[c]
HC-2[d] (P-60)	5.05		-	-	20	75	128[c]
HT-	6.07	-	19	-	-	133[c]	22
Building 3505							
IA-	5.76	18	18	-	-	210[c]	20
IB-	6.63	-	12	22	-	20	270[c]
IC	9.63	-	-	-	25	20	415[c]
ID-	6.07	14	11	-	-	240[c]	10
IE-	8.13	-	-	-	17	20	325[c]
IIA-	3.07	16	8.5	-	-	6	50[c]
IIB-	2.07	-	-	-	17.5	4	19[c]

[a]Filled with stainless steel sieve plates, 0.125 in. holes 23 per cent free area with 2 in. spacing.

[b]Including end sections at equilibrium under pulse conditions given in Table 10.2.

[c]Continuous phase.

[d]Two stripping columns operating in parallel.

Table 10.3. Pulsed Column Operating Conditions

Column	Pulse Conditions		Fraction of Flooding,[a] %	Temperature, °C	Continuous Phase
	Frequency, Cycles/min	Amplitude, in.			
Building 3019					
HA-	60	0.89	47	35	Organic
HS-	50	0.89	39	35	Organic
HC-1[b]	50	0.95	57	45	Aqueous
HC-2[b]	50	0.95	57	45	Aqueous
HT-	45	0.75	25	45	Organic
Building 3505					
IA-	60	1.00	45	25	Organic
IB-	60	1.25	36	25	Aqueous
IC-	60	0.80	32	40	Aqueous
ID-	60	0.70	47	25	Organic
IE-	60	0.85	42	25	Aqueous
IIA-	60	0.80	48	25	Aqueous
IIB-	60	0.80	45	25	Aqueous

[a]100% flooding = 1000 gal/hr ft^2.

[b]Duplicate stripping columns operating in parallel.

Table 10.4. Solvent Loss Distribution: BNL-2

Cycle	Period Covered (1959)	Distribution of Loss, liters					Total Losses, liters
		Solvent Extraction	Leakage	Filter Flush	Column[a] Modification	Column Cleanout and Decontamination	
Codecontamination	4/25-5/15	25	-	-	-	-	25
	5/15-6/15	155	-	425	425	-	1005
	6/15-7/15	150	-	-	300	-	450
	7/15-8/15	190	-	-	-	190	380
	Total	520	-	425	725	190	1860
Partitioning and Second Cycles	4/25-6/16	100	400[b]	-	-	-	500
	5/15-6/15	350	-	-	190	-	540
	6/15-7/15	330	-	-	1830	-	2160
	7/15-8/15	200	-	-	-	200	400
	Total	980	400	-	2020	200	3600
Grand Total		1500	400	425	2745	390	5460

[a]Losses experienced during the development of bottom-interface control methods and procedures.

[b]Estimated loss when an instrument component ruptured.

Table 10.5. Solvent Losses: BNL-2

Cycle	Distribution, liters/kg U Processed[a]					
	Solvent Extraction	Leakage	Filter Flush	Column Modification	Column Cleanout	Total
Codecontamination	0.014	-	0.011	0.020	0.005	0.050
Partitioning and Second Cycles	0.026	0.011	-	0.054	0.005	0.096
Over-all	0.040	0.011	0.011	0.074	0.010	0.146

[a]A total of 37,063 kg of irradiated uranium and 705 kg of recycle uranium product was processed during the BNL-2 program.

11.0 REFERENCES

1. G. S. Sadowski (ORNL), "Problems Associated with the Measurement of Source and Special Nuclear Materials in the Power Reactor Fuel Processing Pilot Plant," (in preparation).

2. E. D. Arnold, "Suggested Activity Specifications for Depleted Normal, Slightly Enriched and Fully Enriched Uranium," ORNL CF-56-7-10 (July 6, 1956).

3. "Specifications for Plutonium Nitrate for Shipment to Rocky Flats," CD60-224 (January 19, 1960).

12.0 ACKNOWLEDGMENT

The following Chemical Technology Division personnel were engaged in operating the pilot plant during the period covered by this report:

R. E. Brooksbank
P. A. Goudreau
C. D. Hylton
W. H. Lewis
J. L. Matherne
W. T. McCarley
J. R. Parrott
R. H. Rainey
G. S. Sadowski
W. R. Whitson
R. H. Vaughan

The assistance of L. T. Corbin, C. E. Lamb, J. H. Cooper, E. I. Wyatt and members of their respective groups of the Analytical Chemistry Division in preparing the analytical data in this report is gratefully acknowledged.

UNCLASSIFIED
ORNL-LR-Dwg. 49289 A

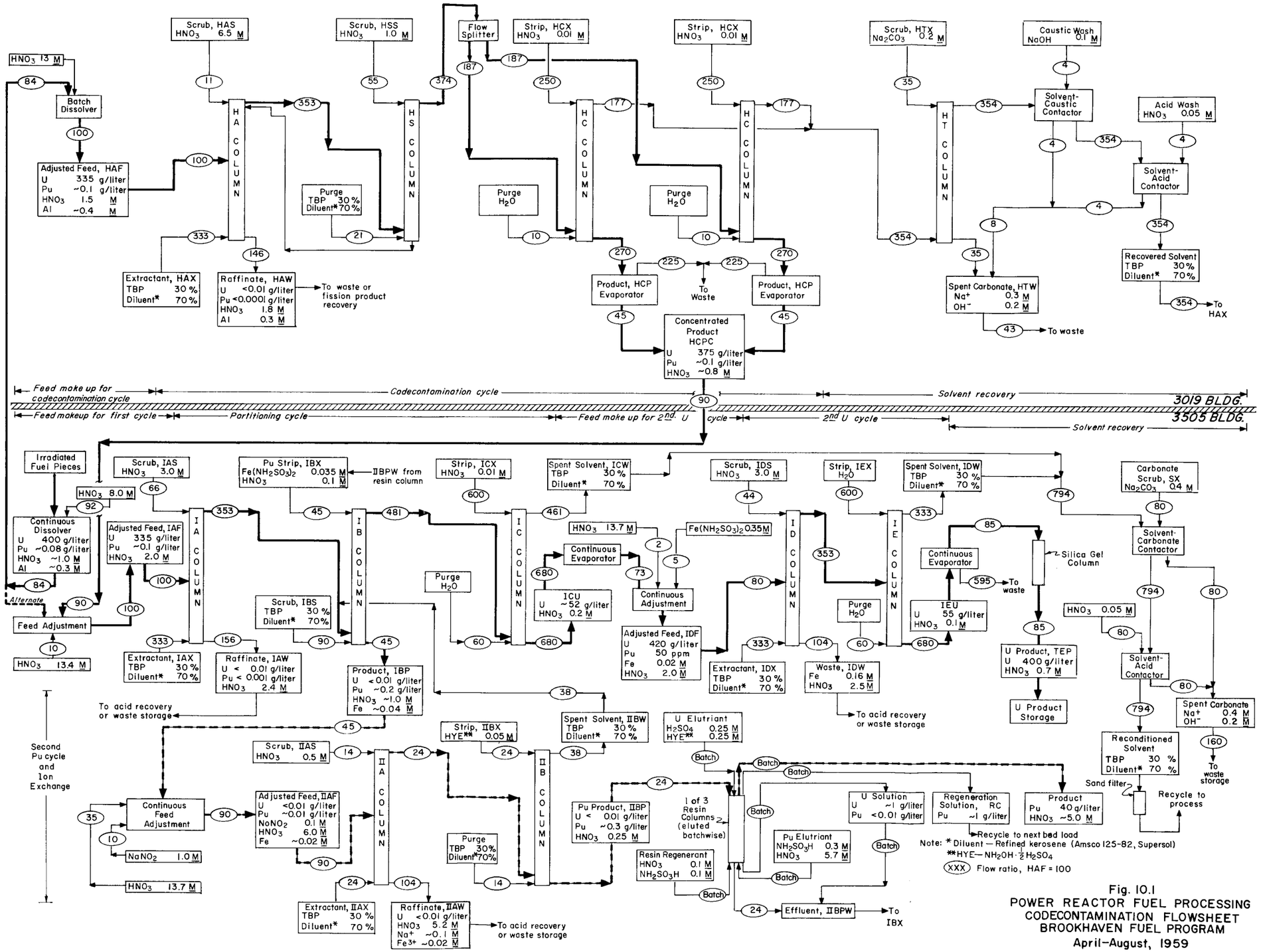

Fig. 10.1
POWER REACTOR FUEL PROCESSING
CODECONTAMINATION FLOWSHEET
BROOKHAVEN FUEL PROGRAM
April–August, 1959

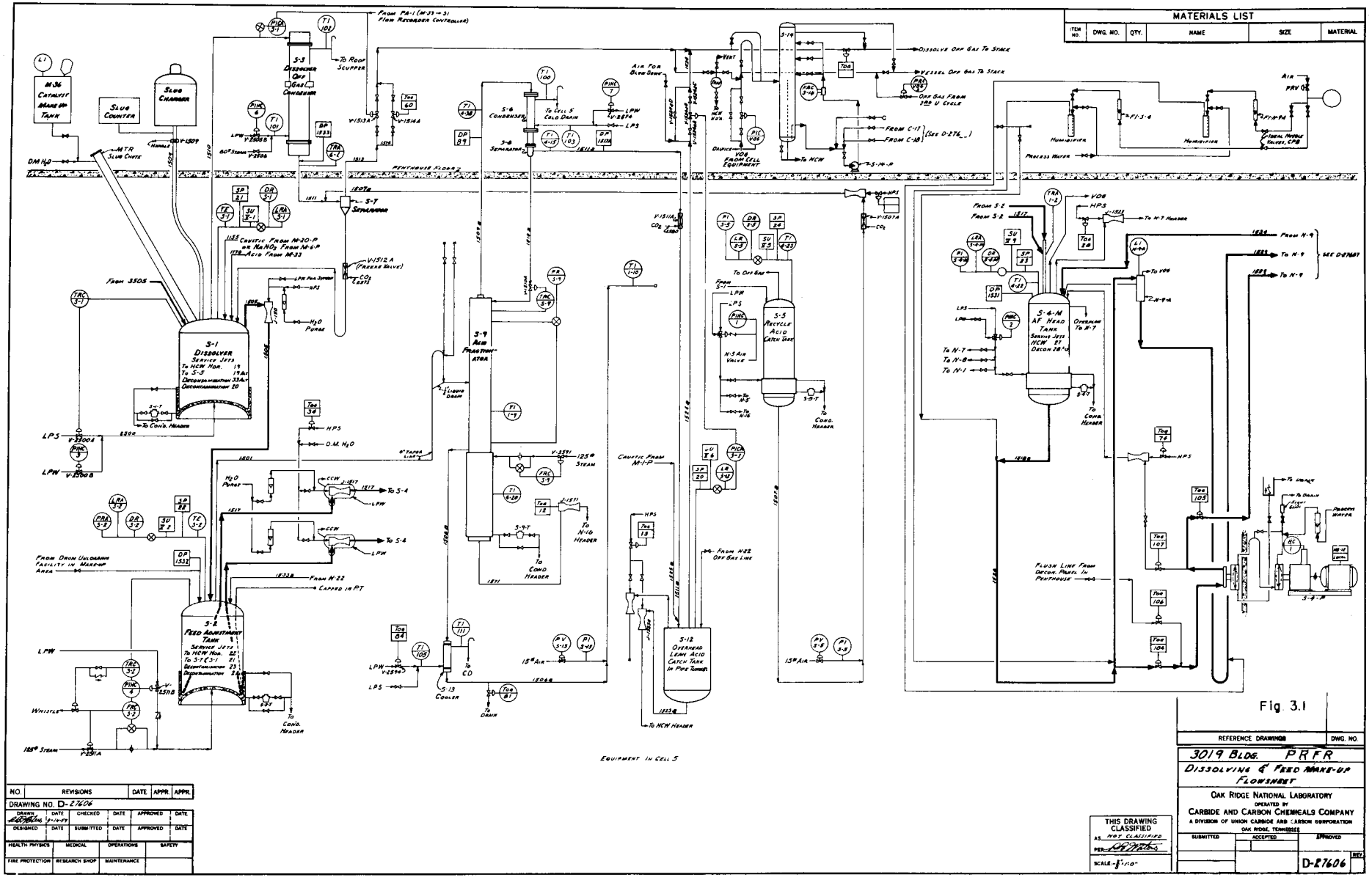

Fig. 10.2. Dissolving and Feed Makeup.

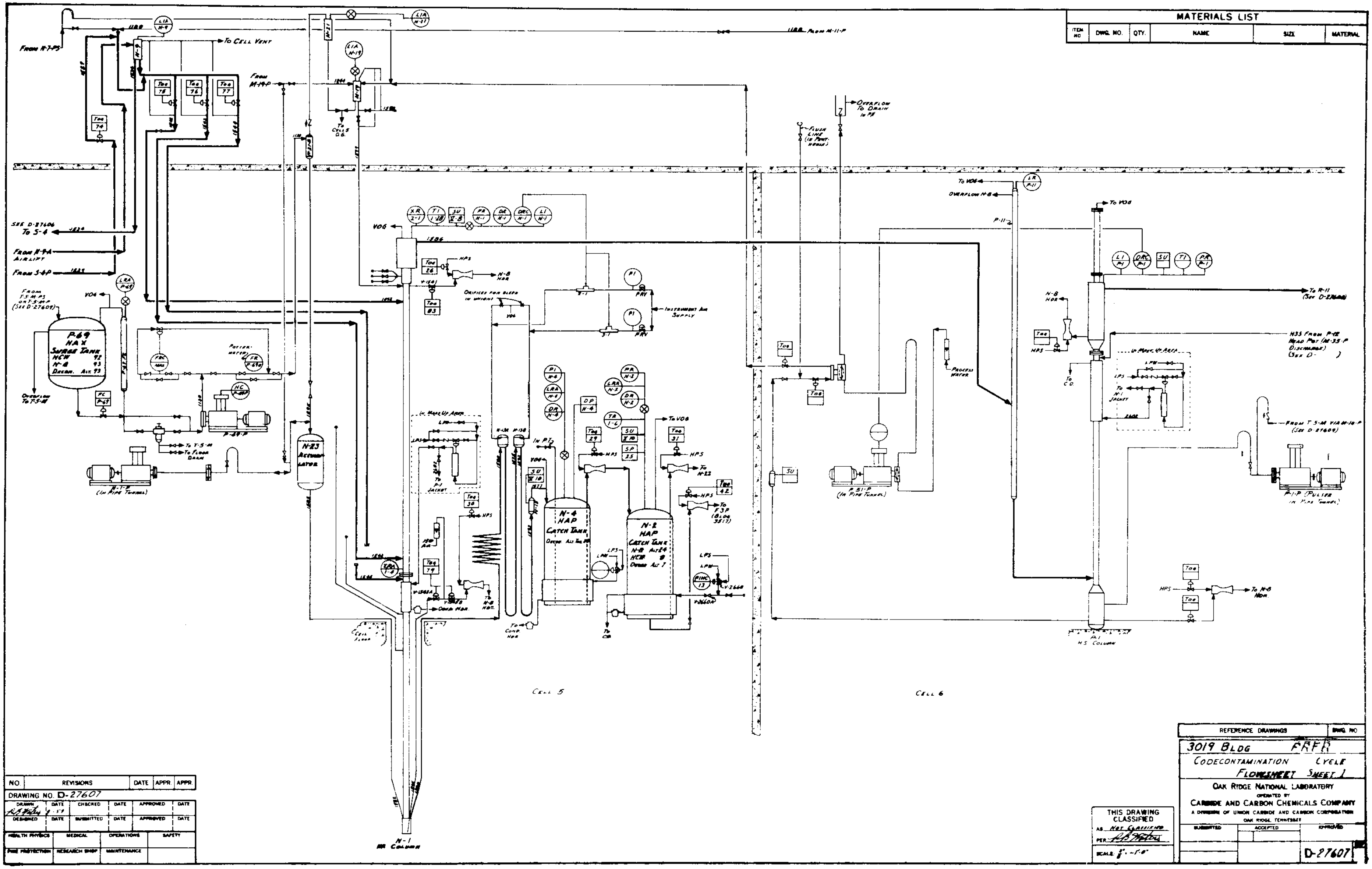

Fig. 10.3. Codecontamination Cycle Flowsheet No. 1.

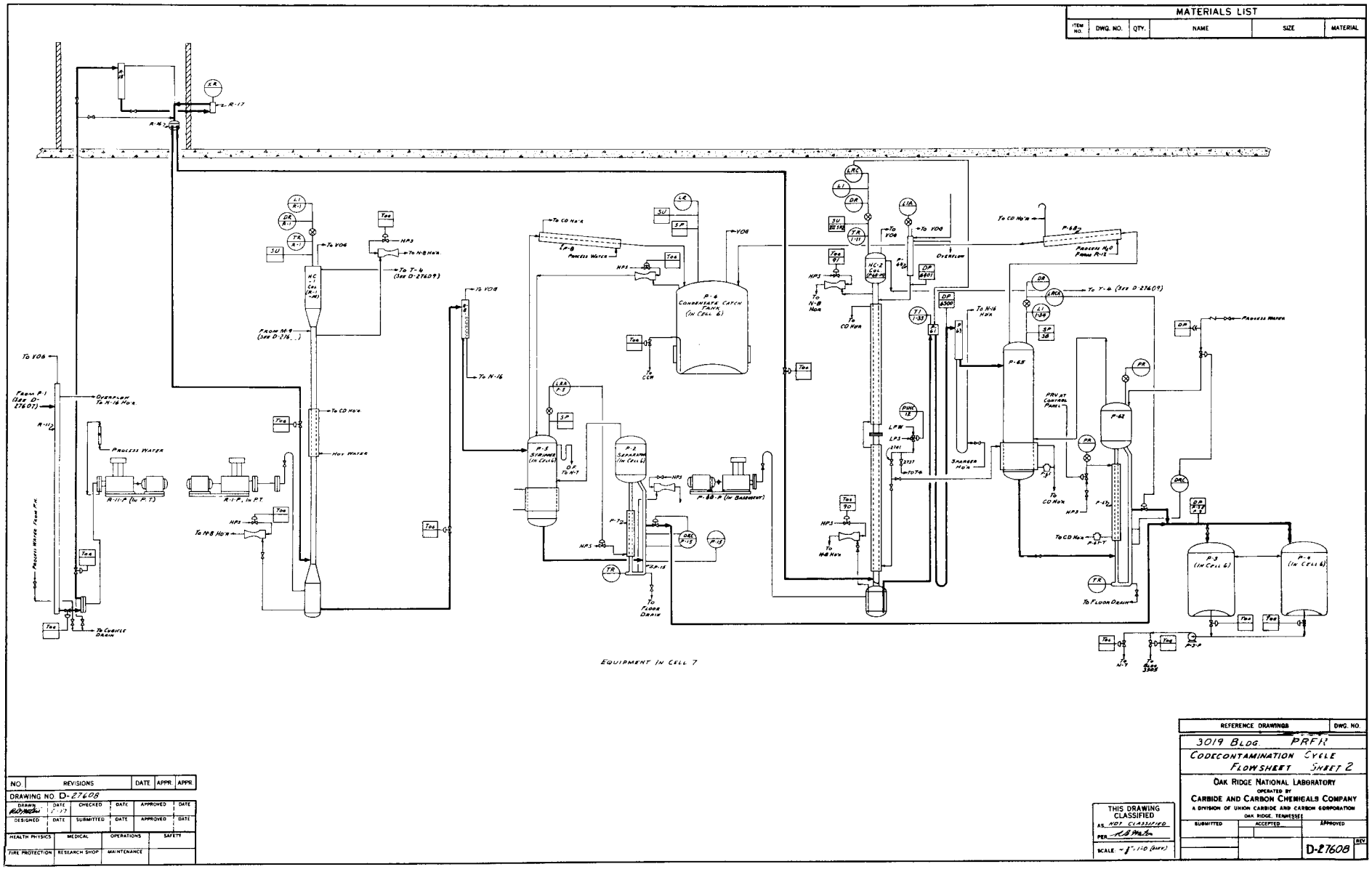

Fig. 10.4. Codecontamination Cycle Flowsheet No. 2.

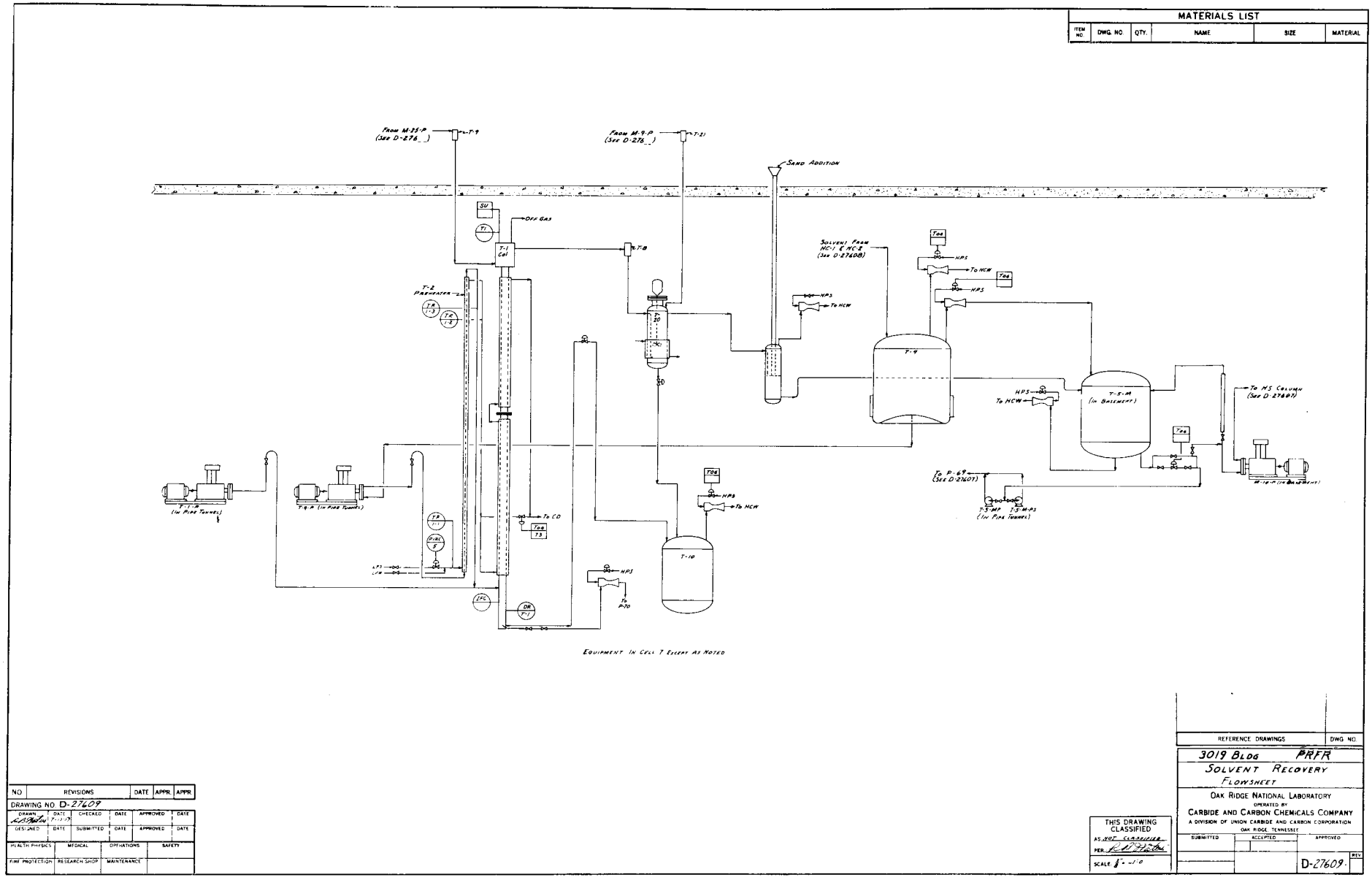

Fig. 10.5. Solvent Recovery Flowsheet.

PARTS LIST				
PART NO.	DWG. NO.	NO. REQD	DESCRIPTION (NAME, SIZE, ETC.)	MATERIAL

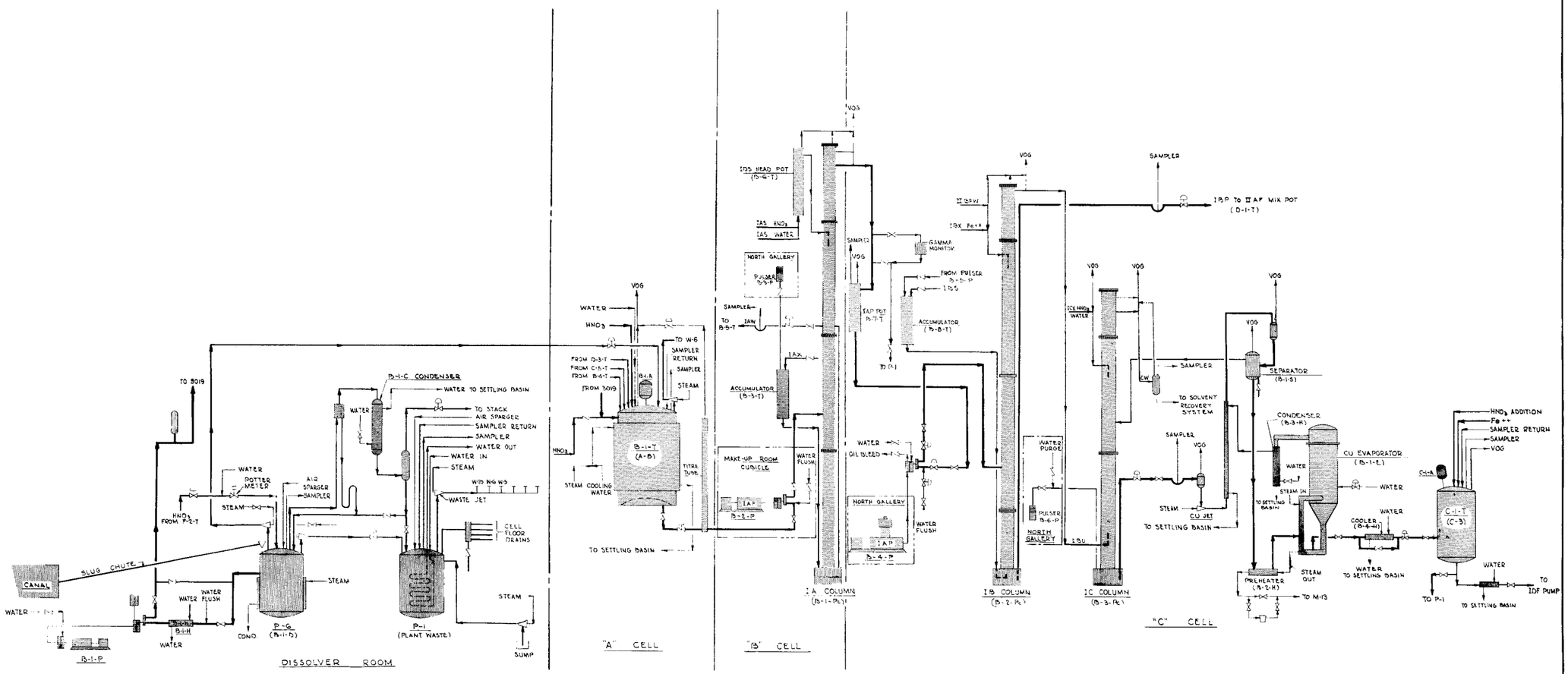

REFERENCE DRAWINGS	DWG. NO.

POWER REACTOR FUEL REPROCESSING PLANT — BLDG. NO. 3503

PROCESS FLOWSHEET
PARTITIONING CYCLE

OAK RIDGE NATIONAL LABORATORY
OPERATED BY
UNION CARBIDE NUCLEAR COMPANY
A DIVISION OF UNION CARBIDE AND CARBON CORPORATION
OAK RIDGE, TENNESSEE

SUBMITTED: W. K. Whitson — ACCEPTED: [illegible] — APPROVED: [illegible]

E- 33845

THIS DRAWING CLASSIFIED AS NOT CLASSIFIED
PER

LIMITS ON DIMENSIONS UNLESS OTHERWISE SPECIFIED
FRACTIONS: ±
DECIMALS: ±
ANGLES: ±
SCALE: NONE

NO.	REVISIONS	DATE	APPD	APPD

DRAWING NO. E- 33845

DRAWN	DATE	CHECKED	DATE	APPROVED	DATE
J.H. Mahaney	5-27-55	W.R.W.	7-10-55		
DESIGNED	DATE	SUBMITTED	DATE	APPROVED	DATE

Fig. 10.6. Process Flowsheet, Partitioning Cycle.

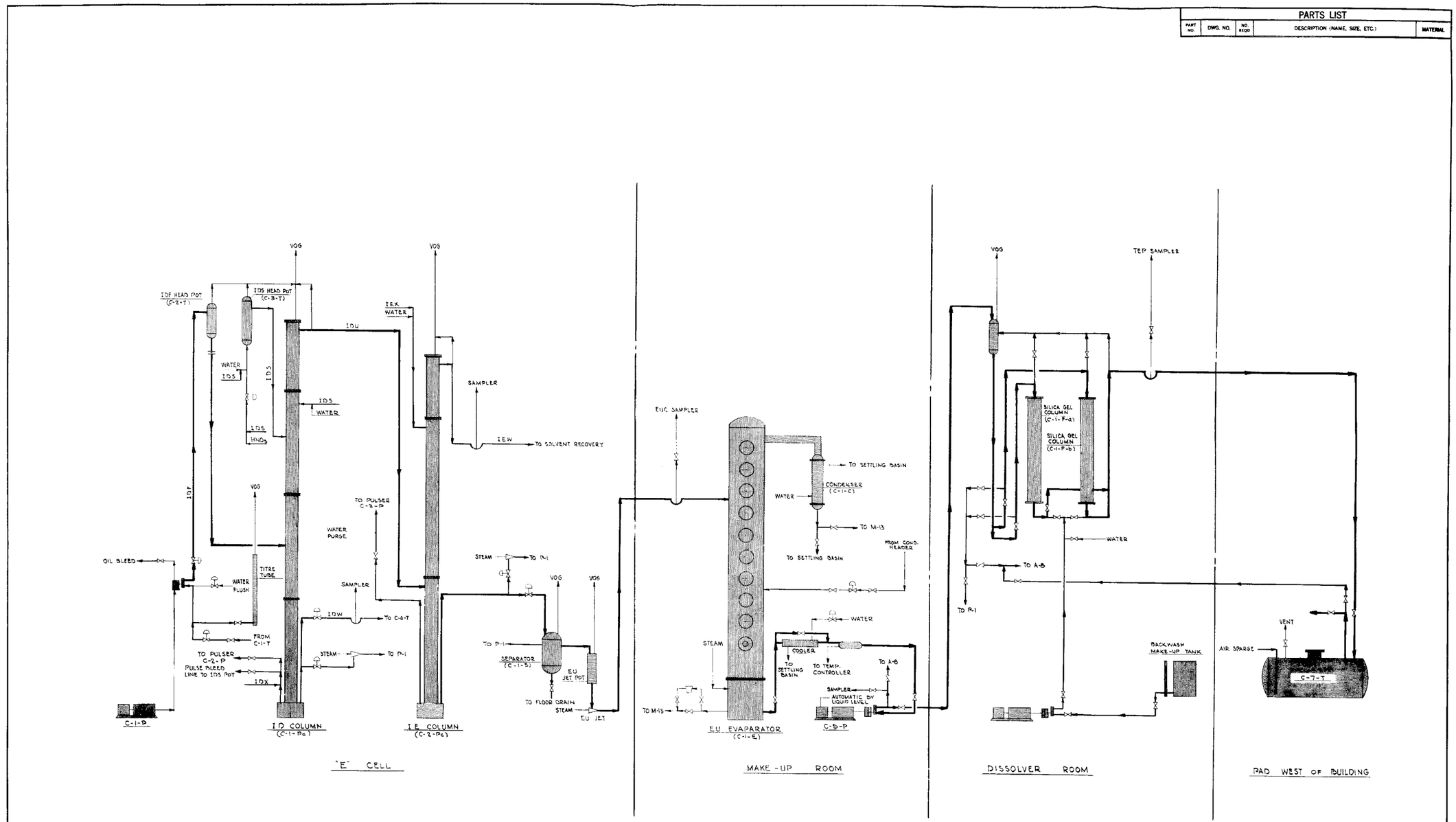

Fig. 10.7. Process Flowsheet, Second Uranium Cycle.

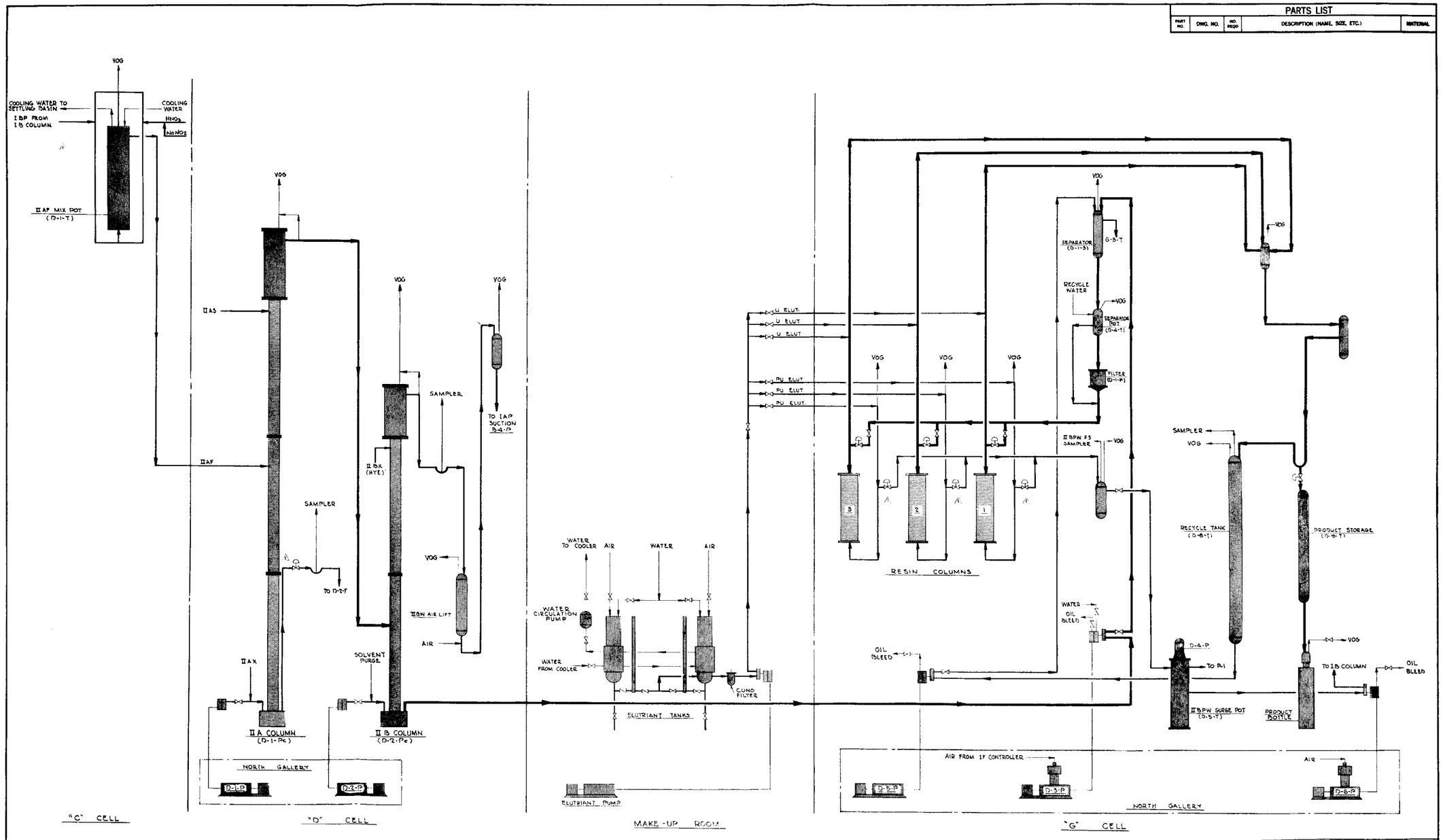

Fig. 10.8. Process Flowsheet, Second Plutonium Cycle.

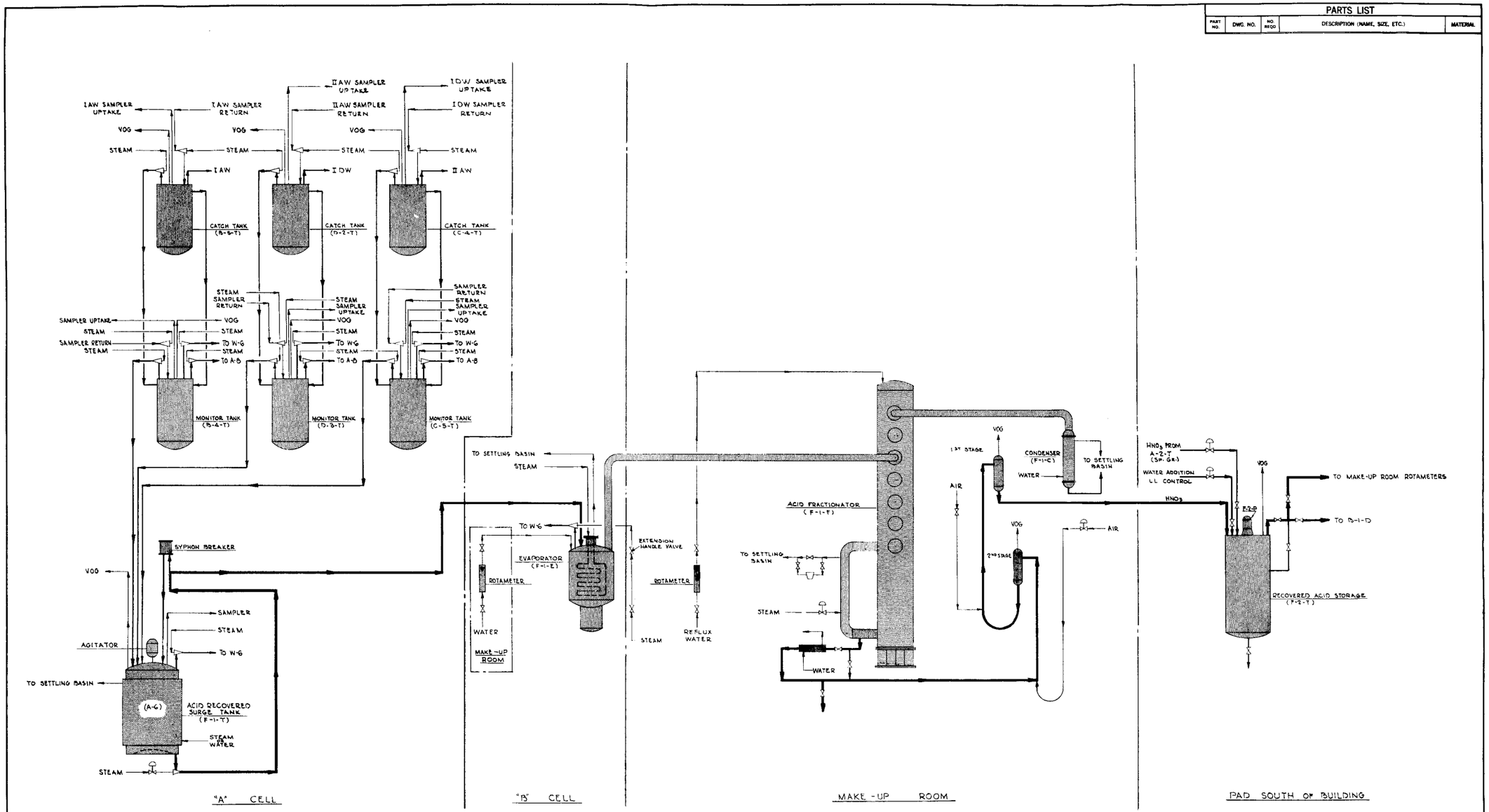

Fig. 10.9. Process Flowsheet, Acid Recovery System.

PARTS LIST				
PART NO.	DWG. NO.	NO. REQD.	DESCRIPTION (NAME, SIZE, ETC.)	MATERIAL

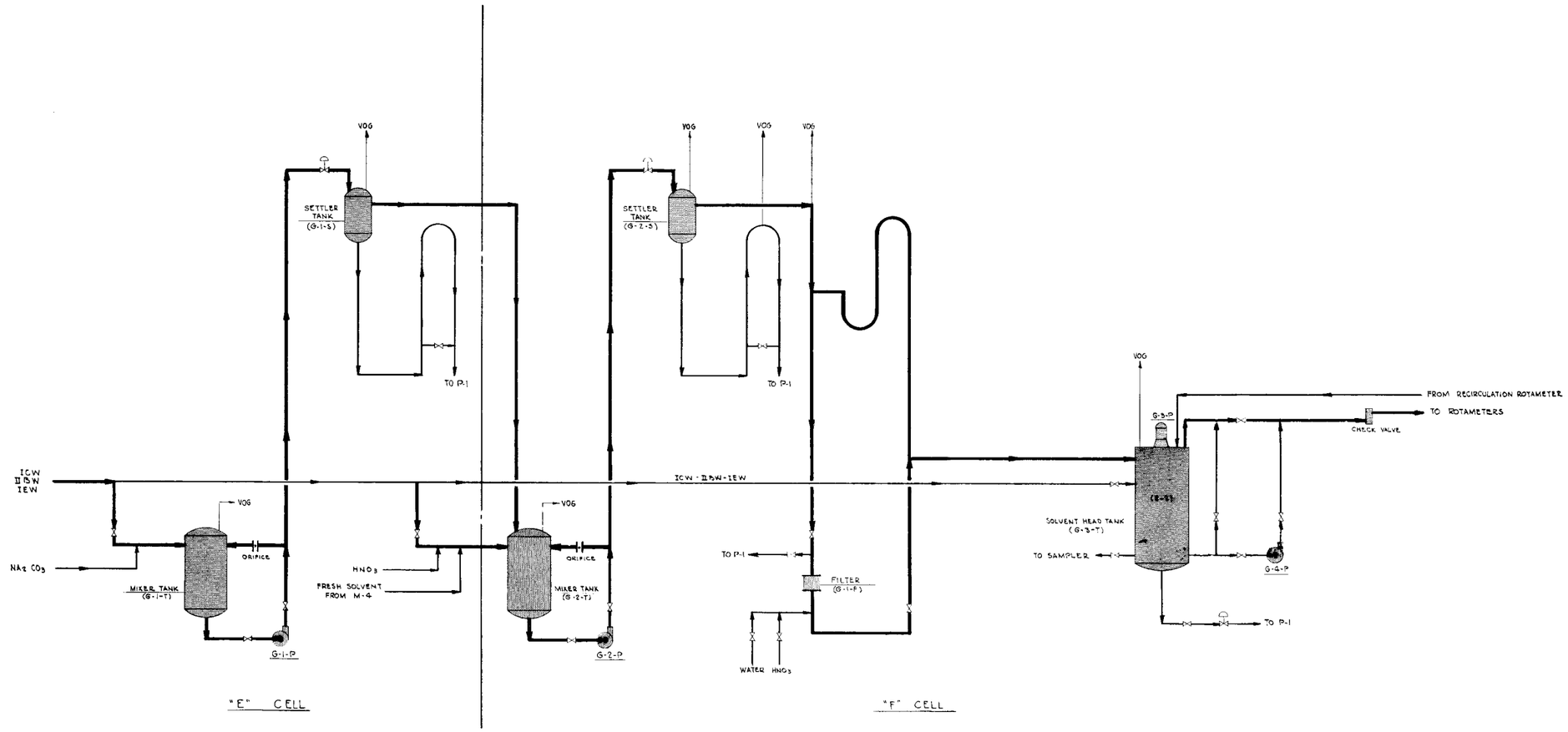

Fig. 10.10. Process Flowsheet, Solvent Recovery System.

REFERENCE DRAWINGS	DWG. NO.

THIS DRAWING CLASSIFIED AS NOT CLASSIFIED
PER

LIMITS ON DIMENSIONS UNLESS OTHERWISE SPECIFIED
FRACTIONS: ±
DECIMALS: ±
ANGLES: ±
SCALE: NONE

POWER REACTOR FUEL REPROCESSING PLANT — BLDG. NO. 3505

PROCESS FLOWSHEET
SOLVENT RECOVERY SYSTEM

OAK RIDGE NATIONAL LABORATORY
OPERATED BY
UNION CARBIDE NUCLEAR COMPANY
A DIVISION OF UNION CARBIDE AND CARBON CORPORATION
OAK RIDGE, TENNESSEE

SUBMITTED W. R. Wilson — ACCEPTED — APPROVED

E-33849 — REV. 1

NO.	REVISIONS	DATE	APPD	APPD
1	GENERAL REVISION J.H.M.	7-14-59		

DRAWING NO. E-33849

DRAWN	DATE	CHECKED	DATE	APPROVED	DATE
J.H. MANNEY	6-12-59	W.R.W.	7-10-59		
DESIGNED	DATE	SUBMITTED	DATE	APPROVED	DATE

ORNL-3013
UC-10 Chemistry-Separation Processes
for Plutonium and Uranium
TID-4500 (15th ed.)

INTERNAL DISTRIBUTION

1. C. E. Center
2. Biology Library
3. Health Physics Library
4-5. Central Research Library
6. Reactor Experimental Engineering Library
7-26. Laboratory Records Department
27. Laboratory Records, ORNL R.C.
28. A. M. Weinberg
29. L. B. Emlet (K-25)
30. J. P. Murray (Y-12)
31. J. A. Swartout
32. E. H. Taylor
33. E. D. Shipley
34. M. L. Nelson
35-36. F. L. Culler
37. W. H. Jordan
38. C. P. Keim
39. J. H. Frye, Jr.
40. S. C. Lind
41. A. H. Snell
42. A. Hollaender
43. K. Z. Morgan
44. M. T. Kelley
45. T. A. Lincoln
46. R. S. Livingston
47. A. S. Householder
48. C. S. Harrill
49. C. E. Winters
50. H. E. Seagren
51. D. Phillips
52. W. K. Eister
53. F. R. Bruce
54. D. E. Ferguson
55. M. E. Whatley
56. H. E. Goeller
57. C. W. Hancher
58. R. A. Charpie
59. J. A. Lane
60. M. J. Skinner
61. R. E. Blanco
62. G. E. Boyd
63. W. E. Unger
64. R. S. Cockreham
65. A. T. Gresky
66. E. D. Arnold
67. C. E. Guthrie
68. J. W. Ullmann
69. K. B. Brown
70. J. C. Bresee
71. P. M. Reyling
72. R. G. Wymer
73. J. W. Youngblood
74. B. F. Bottenfield
75. R. E. Brooksbank
76. F. N. Browder
77. W. D. Burch
78. W. H. Carr
79. G. I. Cathers
80. L. T. Corbin
81. W. J. Greter
82. P. A. Haas
83. C. D. Hylton
84. A. R. Irvine
85. L. J. King
86. C. E. Lamb
87. E. Lamb
88. J. W. Landry
89. R. E. Leuze
90. W. H. Lewis
91. J. T. Long
92. J. L. Matherne
93. J. P. McBride
94. W. T. McCarley
95. W. T. McDuffee
96. F. W. Miles
97. R. P. Milford
98. C. A. Mossman
99. R. G. Nicol
100. J. R. Parrott
101. R. H. Rainey
102. J. T. Roberts
103. G. S. Sadowski
104. E. M. Shank
105. R. H. Vaughan
106. C. D. Watson

107. W. R. Whitson
108. R. H. Winget
109. W. R. Winsbro
110. D. L. Katz (consultant)
111. I. Perlman (consultant)
112. C. E. Larson (consultant)
113. H. Worthington (consultant)
114. J. H. Rushton (consultant)
115. ORNL - Y-12 Technical Library, Document Reference Library

EXTERNAL DISTRIBUTION

116-117. AEC, ORO (1 copy each to D. C. Davis and R. B. Martin)
118. Division of Research and Development, AEC, ORO
119-632. Given distribution as shown in TID-4500 (15th ed.) under Chemistry-Separation Processes for Plutonium and Uranium (75 copies - OTS)