MARTIN MARIETTA ENERGY SYSTEMS LIBRARIES
3 4456 0364214 6

CENTRAL RESEARCH LIBRARY
DOCUMENT COLLECTION

ORNL-3032
UC-25 - Metallurgy and Ceramics

A DEVICE TO SIMULATE THE SERVICE THERMAL CONDITIONS IN EGCR-TYPE FUEL ELEMENTS

W. R. Martin
J. R. Weir

CENTRAL RESEARCH LIBRARY
DOCUMENT COLLECTION
LIBRARY LOAN COPY
DO NOT TRANSFER TO ANOTHER PERSON
If you wish someone else to see this document, send in name with document and the library will arrange a loan.

OAK RIDGE NATIONAL LABORATORY
operated by
UNION CARBIDE CORPORATION
for the
U.S. ATOMIC ENERGY COMMISSION

LEGAL NOTICE

This report was prepared as an account of Government sponsored work. Neither the United States, nor the Commission, nor any person acting on behalf of the Commission:

A. Makes any warranty or representation, expressed or implied, with respect to the accuracy, completeness, or usefulness of the information contained in this report, or that the use of any information, apparatus, method, or process disclosed in this report may not infringe privately owned rights; or

B. Assumes any liabilities with respect to the use of, or for damages resulting from the use of any information, apparatus, method, or process disclosed in this report.

As used in the above, "person acting on behalf of the Commission" includes any employee or contractor of the Commission, or employee of such contractor, to the extent that such employee or contractor of the Commission, or employee of such contractor prepares, disseminates, or provides access to, any information pursuant to his employment or contract with the Commission, or his employment with such contractor.

ORNL-3032

Contract No. W-7405-eng-26

METALLURGY DIVISION

A DEVICE TO SIMULATE THE SERVICE THERMAL CONDITIONS IN EGCR-TYPE FUEL ELEMENTS

W. R. Martin and J. R. Weir

DATE ISSUED

DEC 28 1960

OAK RIDGE NATIONAL LABORATORY
Oak Ridge, Tennessee
operated by
UNION CARBIDE CORPORATION
for the
U. S. ATOMIC ENERGY COMMISSION

MARTIN MARIETTA ENERGY SYSTEMS LIBRARIES

3 4456 0364214 6

A DEVICE TO SIMULATE THE SERVICE THERMAL CONDITIONS IN EGCR-TYPE FUEL ELEMENTS

W. R. Martin and J. R. Weir

ABSTRACT

An investigation into the dimensional behavior of the Experimental Gas-Cooled Reactor (EGCR) fuel cpasule at elevated temperatures required the design and development of a device to simulate the service thermal conditions for the EGCR. This apparatus has been designed. Central UO_2 temperatures of 4000°F can be attained with radial thermal gradients of several hundred degrees Fahrenheit. Heating and cooling rates of 1000°F/min can be obtained. This equipment can be used for various other types of experiments. With few modifications, thermal expansion, thermal conductivity, thermal cycling, and short-time tensile tests can be carried out in environments of controlled composition and pressure. This paper describes the apparatus, its capabilities, and examples of tests completed utilizing the equipment described.

INTRODUCTION

The Experimental Gas-Cooled Reactor (EGCR) is a combined experimental and power demonstration reactor to be constructed at Oak Ridge, Tennessee. It is fueled with enriched uranium dioxide cored pellets clad in stainless steel, moderated with graphite, and cooled with helium. Any break or rupture in the cladding of the fuel capsule that will release fission products into the reactor coolant stream is considered to be a fuel element failure. Such a failure may occur from a weld imperfection, a concentration of foreign material in the cladding, strain cycling, or a buildup of fission-gas pressure that exceeds the rupture strength of the cladding.

Some of the parameters design engineers[1] have considered in determining fuel element failures for the EGCR are: fuel element cladding temperatures, the amount of fission gas in the fuel element void space at any time, and the creep- and stress-rupture properties of the cladding material. However, the effect of the conditions not normal to every day reactor operation, such as frequent thermal cycling from reactor shutdown and subsequent startup, are among those factors which were difficult to evaluate from data available at the inception of this program. Concern that the

[1] J. K. Davidson, R. S. Miller, H. L. Sturza, and E. A. Wick, Study No. 100 Fuel Assembly for the Experimental Gas-Cooled Reactor, Allis-Chalmers Manufacturing Company, Contract AT(10-1)-925 (August 12, 1959).

difference in the physical and mechanical properties of the type 304 stainless steel cladding, and the UO_2 fuel pellet could cause failure of the fuel element created an interest in the behavior of these two materials at elevated temperatures when combined in a configuration similar to that of the EGCR fuel capsule. A device in which the physical behavior of an EGCR fuel capsule could be observed while subjected to the thermal conditions proposed for the reactor was needed. The major requirements considered in the design were:

1. A radial temperature gradient in the fuel capsule with the maximum temperature occurring at the center.
2. A maximum central UO_2 temperature between 3000 and 4000°F with a stainless steel-cladding temperature less than 1500°F.
3. Rapid heating and cooling rates that could be controlled.
4. Absolute measurement of axial and radial growth at temperature of the UO_2.

DESCRIPTION OF APPARATUS

The general features of the apparatus are shown in Figs. 1 and 2. An electrical resistance-type furnace is utilized which has a single tantalum rod as its heater element. The power is supplied to the heater element by two internally water-cooled copper electrodes, which, in turn, hold the tantalum heater rod in place. The copper electrode at the bottom of the apparatus is held rigidly, while a copper bellows allows the axial position of the top electrode to vary during test. This movement is monitored externally by means of a dial indicator and internally by radiography. The dial indicator allows the observation of the movement of electrode and heater element. Radiographic techniques allow the movement of the specimen to be monitored since it may be independent of the movement of the electrode and heater element.

The specimens under test are cooled radially by an aluminum shell which, in turn, is cooled on its outer surface by flowing water. This aluminum shell, whose wall thickness is 1/8 in., serves as a good heat sink particularly when the internal surface is heavily oxidized. The maximum coolant flow used in conjunction with this heat sink is 8.0 gpm. With this flow rate and a heater element temperature of 3500°F, the maximum exit water temperature is 74°F – an increase of approx 20°F.

The heater element is a 1/4-in.-diam tantalum rod. Various lengths of heater have been used depending on the particular experimental application.

UNCLASSIFIED
ORNL-LR-DWG 43707

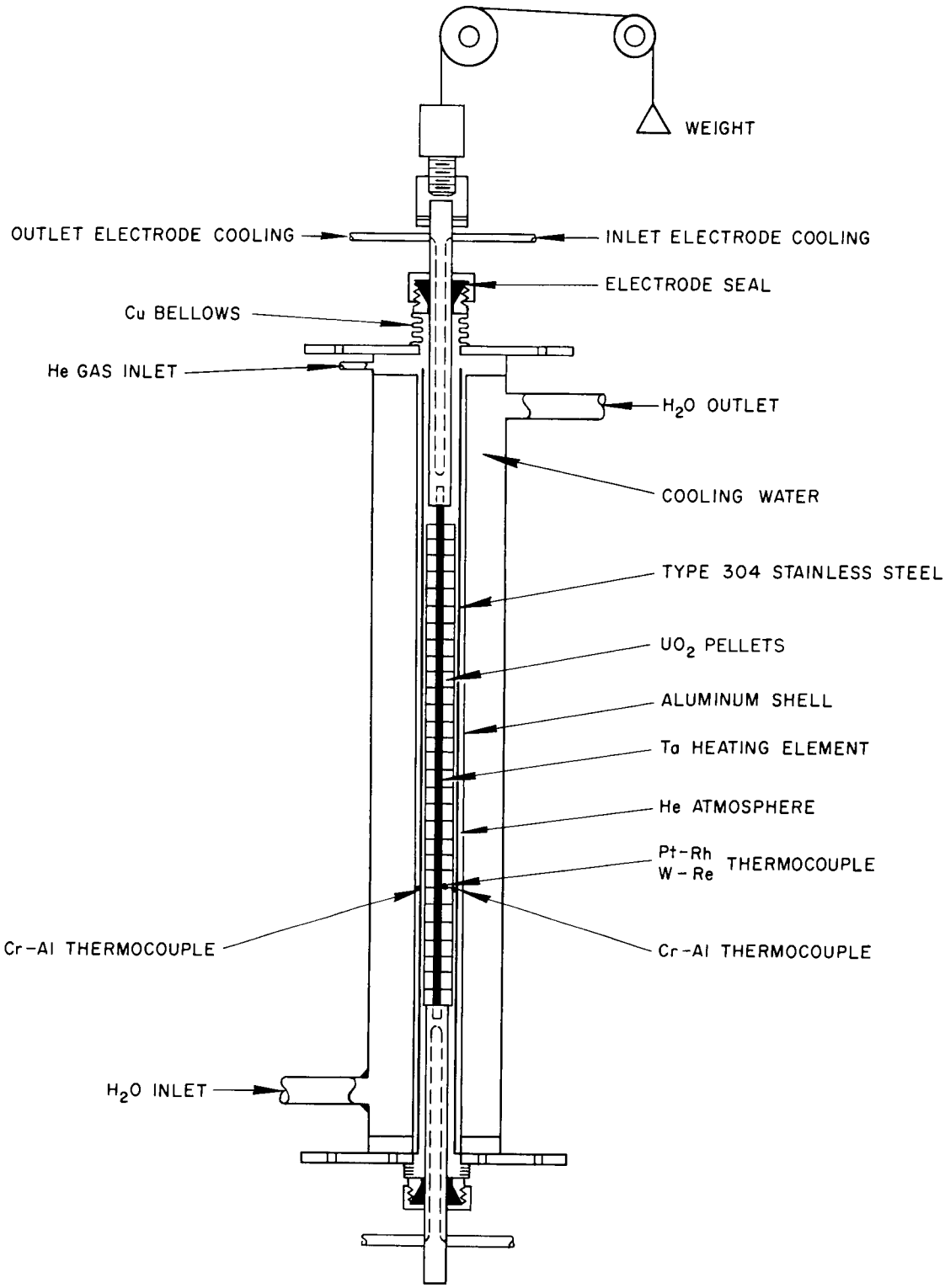

Fig. 1. Apparatus for Radiography of Heated Fuel Capsule.

Unclassified
ORNL-LR-DWG 49135

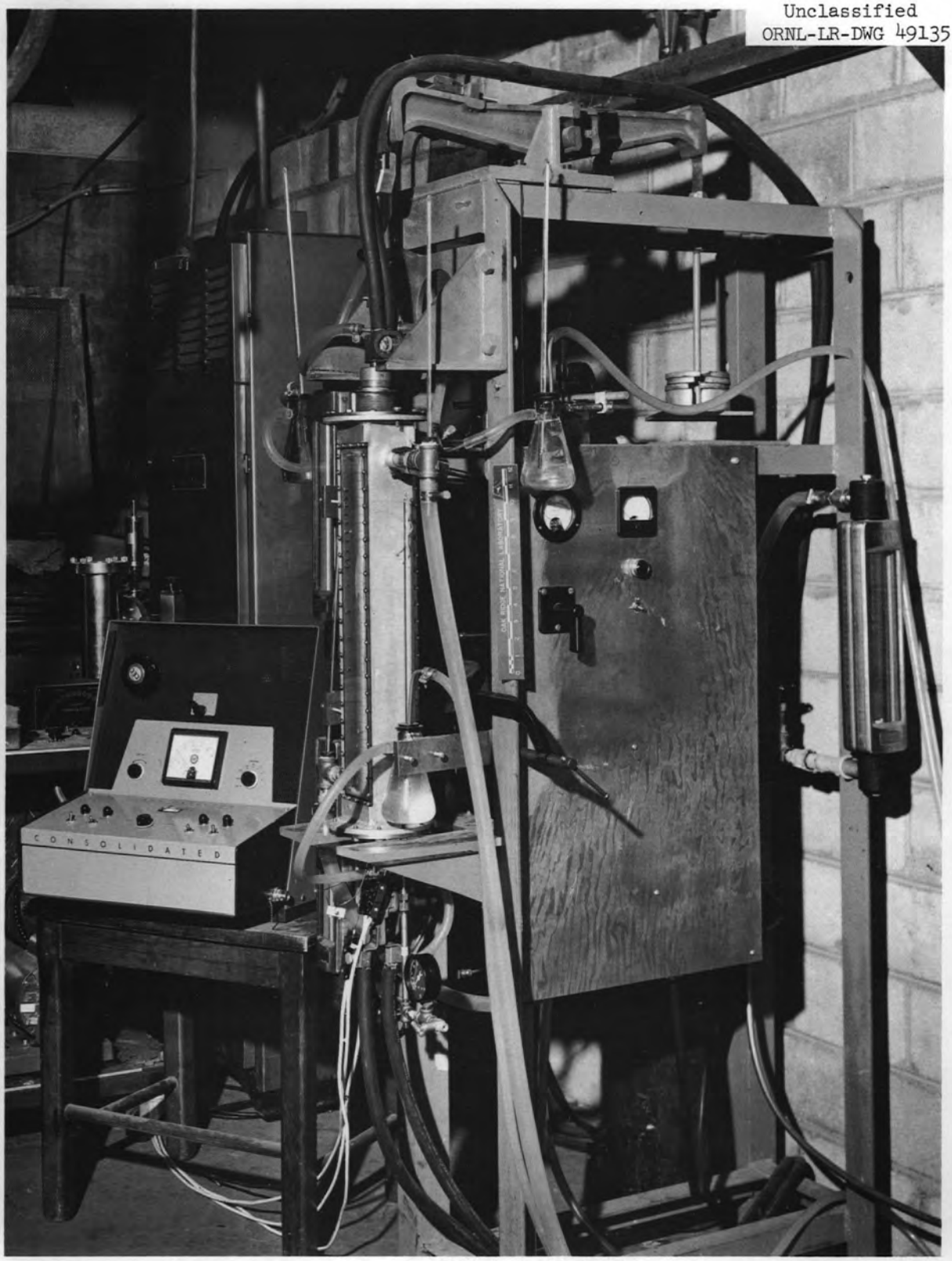

Fig. 2. Pictorial View of Experimental Apparatus.

For rapid heating, currents as high as 600 amp are needed, while relatively small currents suffice for maintaining a constant temperature. Voltages required are less than 10 v depending on the resistance of the heater. The direct-current power for this apparatus is supplied by a variable transformer and a selenium rectifier. The basic electrical diagram is shown in Fig. 3.

Rubber "U" cups have been used as electrical insulators and environmental seals against the electrodes. These have been successful in containing either gases or vacuum. These electrode seals are protected from radiant heat by means of a transite insulator washer. Vacuum, helium, and argon environments have been used successfully in this chamber.

Thermocouples indicate the temperature within the apparatus. Two general types have been used and will be discussed in more detail later. The entrance ports for these thermocouples are of two general types as shown schematically in Fig. 4. Metal-sheathed, insulated thermocouples are sealed with a teflon ferrule used in place of the metal ones normally found in a fitting of this type. Common ceramic-bead insulated thermocouples are sealed by inserting each wire of the thermocouple separately through a rubber stopper. This stopper is a press fit and is held securely in a brass fitting.

DISCUSSION OF TEST CONDITION CAPABILITIES

Temperature

The apparatus was designed for continuous operation in the 500 to 4000°F temperature range. The apparent limitation to the peak design temperature thus far has been the absence of a reliable and accurate device for measuring temperature above 3000°F. Maximum temperatures of 3500°F have been recorded by placing a tungsten-rhenium thermocouple near the heater rod. The radial gradients achieved have been satisfactory, although the control of these gradients has been limited. The maximum radial gradient observed, measured over a radial distance of 0.250 in., has been 1500°F at a central temperature of 3500°F. This gradient was obtained while experimenting with an EGCR fuel capsule.

The thermocouples are metal-sheathed, ceramic-insulated with insulated junctions. The specific types of thermocouples used are listed in Table 1. No drift in the

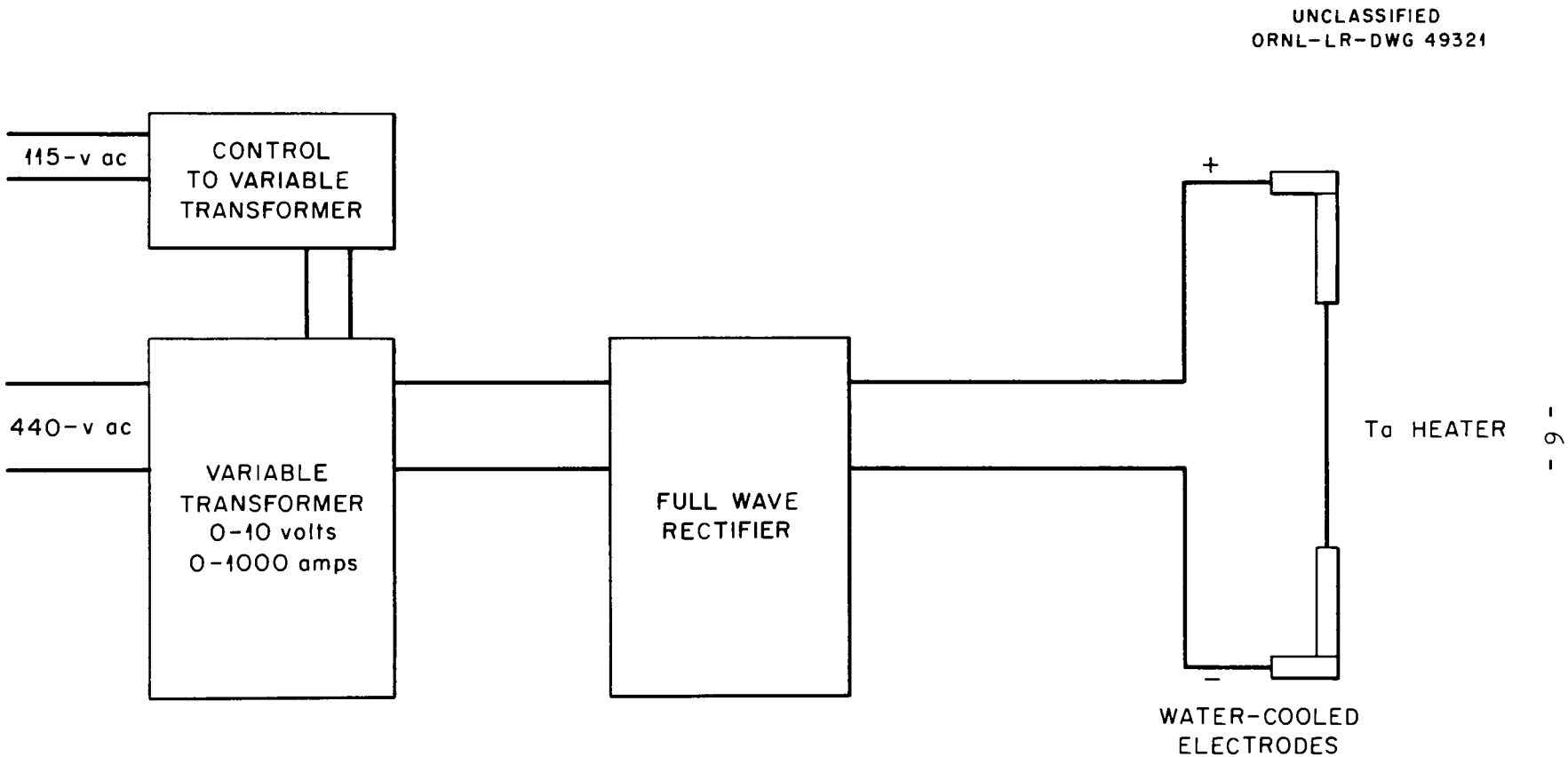

Fig. 3. Basic Electrical Diagram.

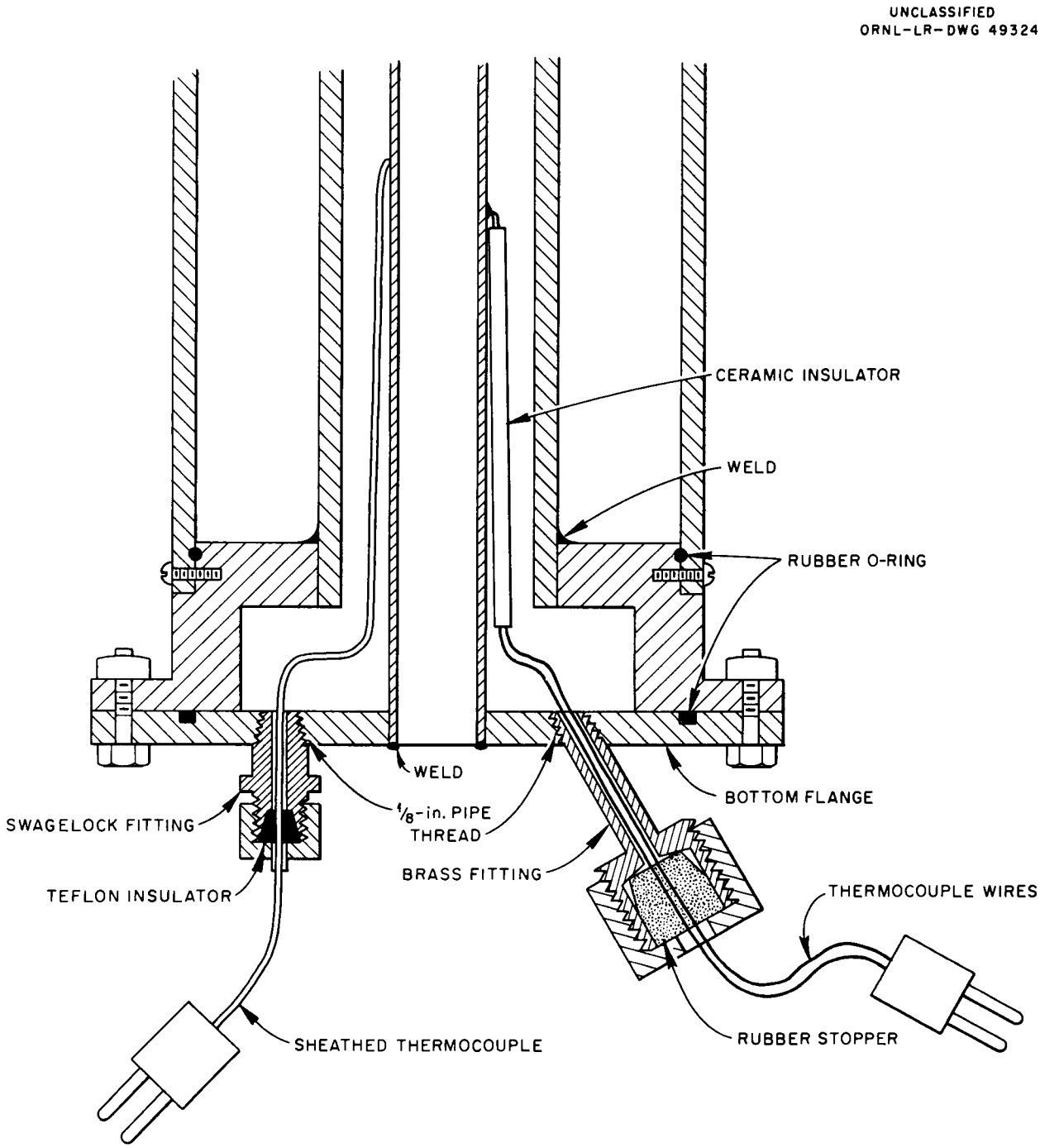

Fig. 4. Entrance Ports for Thermocouples.

Table 1. Thermocouple Characteristics

Type of Thermocouple	Outside Diameter of Sheath (in.)	Sheath Material	Insulation
Cr-Al	0.025	Type 304 stainless steel	MgO
	0.040	Type 304 stainless steel	MgO
Pt(Pt-Rh)	0.060	Platinum	MgO
W-Re	0.060	Tantalum	BeO

electromotive force over a six-hour period was observed for any of the thermocouples at temperature. However, for longer tests at a given elevated temperature level, temperature profile determinations would probably prove to be difficult due to drift[2] unless thermocouple wells are utilized to permit periodic checking and replacement of thermocouples. No difficulty was experienced in bending the sheathed thermocouples as long as the bending radius exceeded twice the diameter of the sheath material. The Chromel-Alumel and platinum-platinum-10% rhodium alloy thermocouple outputs are recorded on standard commercial electronic devices designed for this purpose. The response from the tungsten-rhenium thermocouple is recorded on a millivolt recorder, with a range of 0.00 to 30.00 mv for temperatures up to 4000°F. Electromotive force pickup due to direct-current resistance heating was not observed for the insulated-tip thermocouples. Although response of the thermocouples is observed when the current is stopped, this is attributed to the rapid cooling rate of the apparatus. The thermocouples that are placed inside the specimen lag a few seconds before responding to a current change. The lag produced as a result of the insulated tip is not of sufficient magnitude to be detrimental for the experiments performed in this apparatus to date.

Heating and Cooling Rates

The maximum heating rate for the heater rod itself is unknown since the maximum power available has not been imposed on the heater. However, the maximum heating rate,

[2] D. L. McElroy, Progress Report Thermocouple Research Report for the Period November 1, 1956, to October 31, 1957, ORNL-2467 (Feb. 14, 1958).

when the power settings are present for a steady-state central-specimen temperature of 2500°F, is 1250°F/min. The maximum cooling rate observed from a central-specimen temperature of 2500°F is 1070°F/min.

The apparatus, as initially constructed, did not permit a constant cooling or heating rate. However, the circuit was modified to the one shown in Fig. 5 to permit a more uniform power adjustment than possible by an on-off power control. This modified circuit allows a more constant heating and cooling rate, while at the same time permitting automatic thermal cycling. For example, without a constant cooling or heating circuit, the rates decrease in such a fashion that the time to reach a steady-state central temperature of 2500°F is approx 6 min. The cooling time from this maximum to 500°F is also 6 min. However, with the modified circuit, both the heating and cooling rates have been adjusted to average values of 150°F/min. Simple counting devices record the number of thermal cycles during the test.

Very high heating rates may be desired for short-time tensile tests. In this apparatus more rapid heating rates may be obtained by utilizing a high-power input during the first-time increment of testing until the desired temperature is reached; at which time the power input would be reduced to the value necessary to maintain steady-state conditions.

Environment

The apparatus is by necessity one in which environment can be controlled. The limitations of environment are imposed because of gas-metal reactions at elevated temperatures between the environment and metal or metallic-oxide components in the system. The reaction between hydrogen and the tantalum heater would be an example. Another restriction associated with environment is the pressure of the gas phase at the operating temperature. At temperatures above approx 3100°F and at pressures on the order of 20 μ, tantalum metal has been transported and deposited on the colder surfaces of other components. In Fig. 6 are shown several examples of this phenomenon. Figure 6a shows tantalum deposited on the wall of UO_2 and Fig. 6b shows a tantalum stainless steel reaction layer on the inner surface of the cladding.

The maximum pressure inside the apparatus also is limited due to the pressure seals and, more importantly, the stresses created by the high pressures on the aluminum heat sink. The apparatus has contained pressures up to 325 psi without difficulty. The average temperature of the aluminum during the time this pressure was maintained was 110°F.

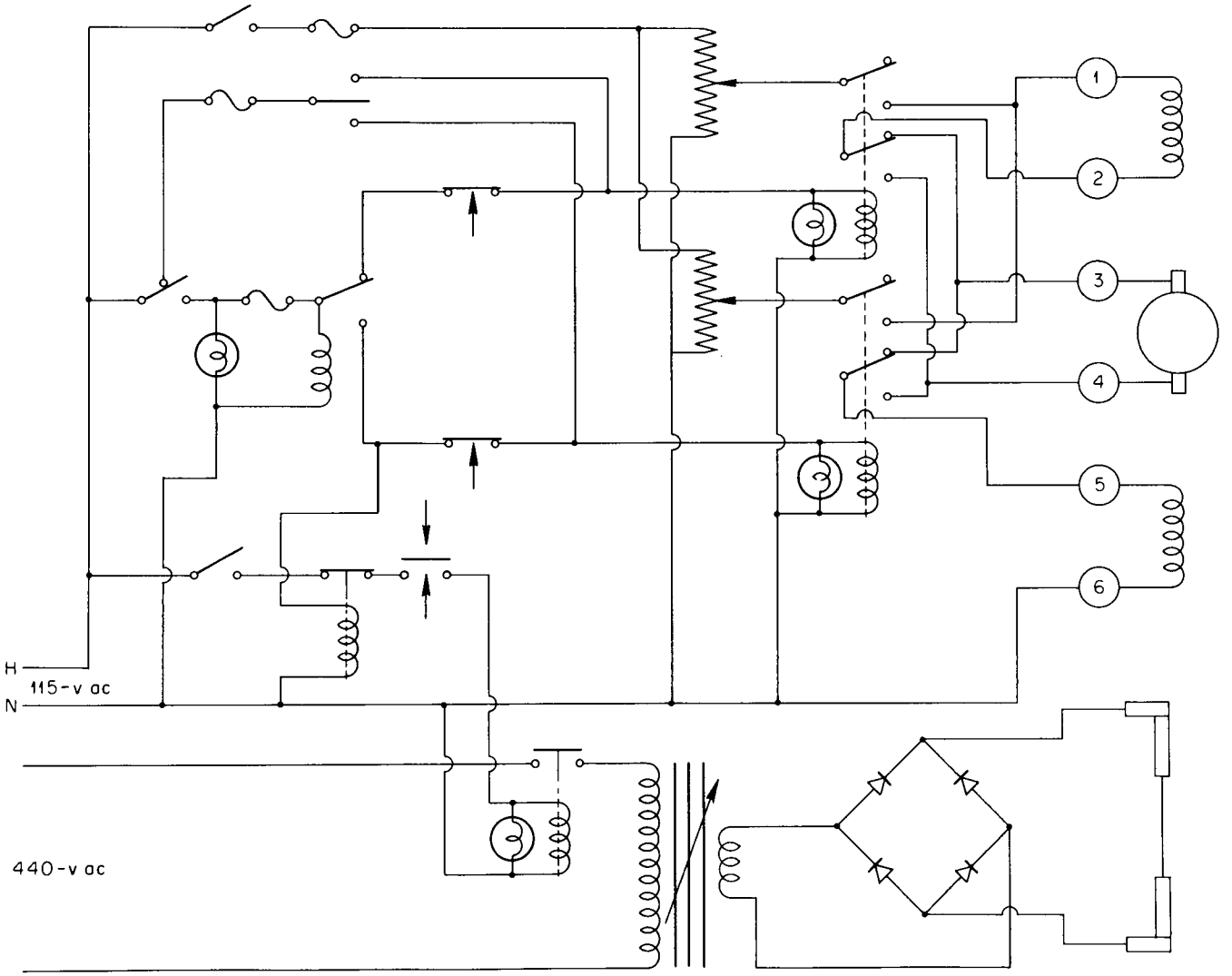

Fig. 5. Modified Electrical Circuit for Cycling Control Circuit.

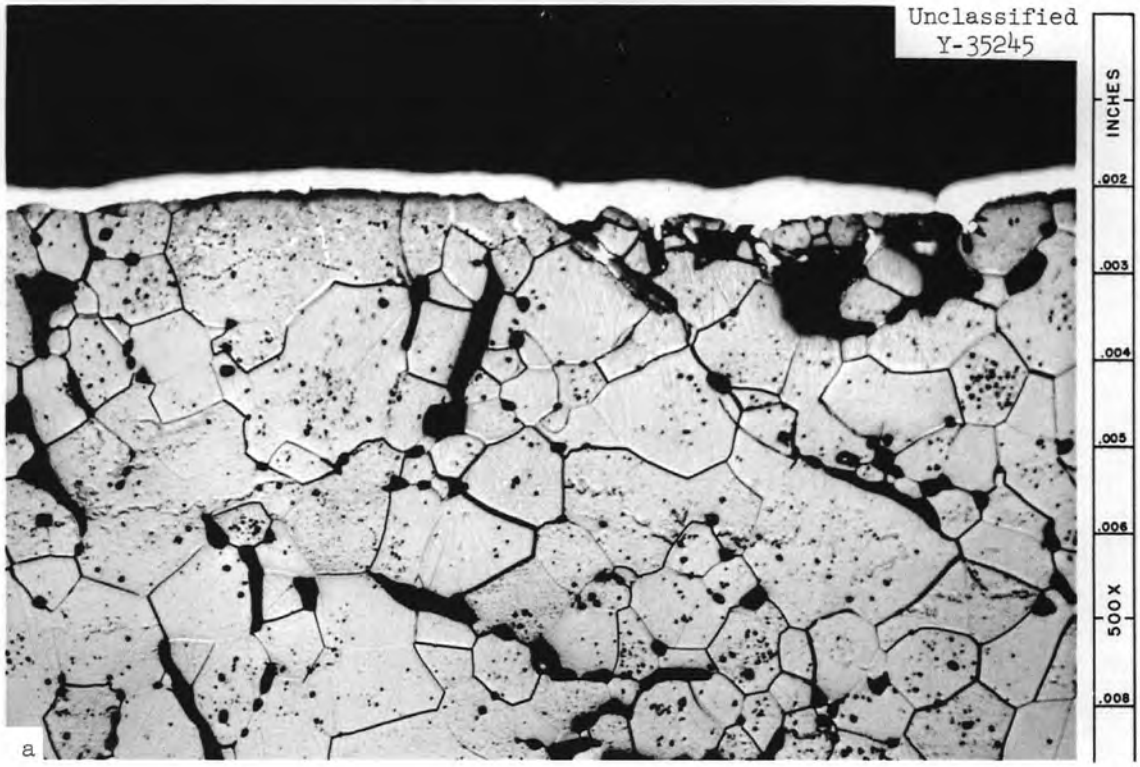

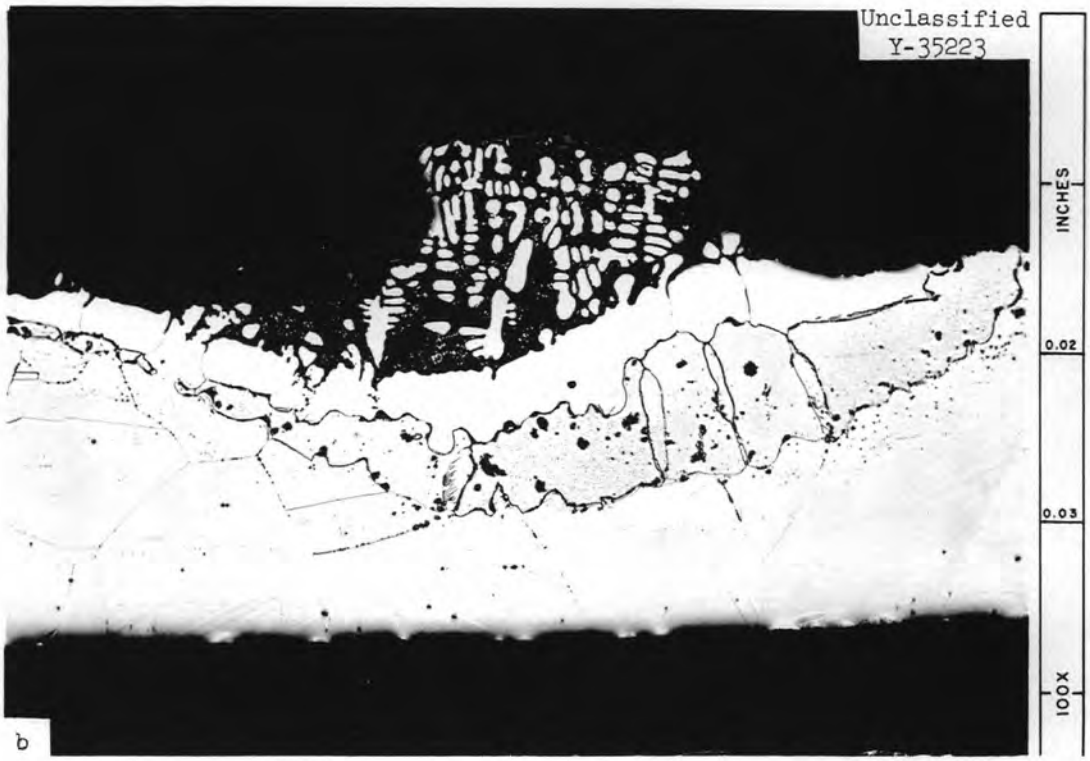

Fig. 6. Tantalum Compatibility with Type 304 Stainless Steel and UO_2.

Specimen Design

The apparatus permits considerable flexibility in specimen geometry so that in general this is predicated on the type of experiment desired. In the apparatus as described there are three common restrictions which result primarily from its physical size. These are: (1) the outside diameter of the specimen cannot exceed 1.25 in., (2) the effective length of the specimen cannot exceed 28 in., and (3) the effective length of the specimen should not be less than 10 in. at room temperature. The outside-diameter restriction is due to the inside dimensions of the aluminum heat sink. The maximum effective length is restricted due to the thermal expansion and heat sink axial-dimension considerations. A minimum effective length is required to minimize the end effects due to axial-thermal gradients and to increase the accuracy of the radiographic technique.

For experiments that utilize the tantalum heater rod, the specimens must be hollow cylinders. In addition to the three basic limitations to specimen design mentioned heretofore, the inside diameter should not be less than 0.325 in.

If the experiment is designed so that the specimen is resistance heated, then the prime consideration in specimen design would be power availability and specimen resistance, in addition to the three size restrictions.

TYPICAL EXPERIMENTS

Axial Expansion

Basically the furnace affords the opportunity to study the dimensional and thermal behavior of specimens with radial thermal gradients, while subjected to various environmental conditions.

The radial thermal gradients obtained in this device where the specimen was one that simulated the EGCR fuel element are shown in Table 2. The dimensional behavior in the axial direction can be measured by the use of radiography or extensometers and in some instances both. To measure the radial material displacement requires the use of low-voltage radiography. To determine the physical condition of the pellet, that is, the presence of cracks, laminations, etc., gamma radiography or x-ray radiography can be used. The latter is used whenever possible. Figure 7 demonstrates the experimental arrangement for radiographic examination.

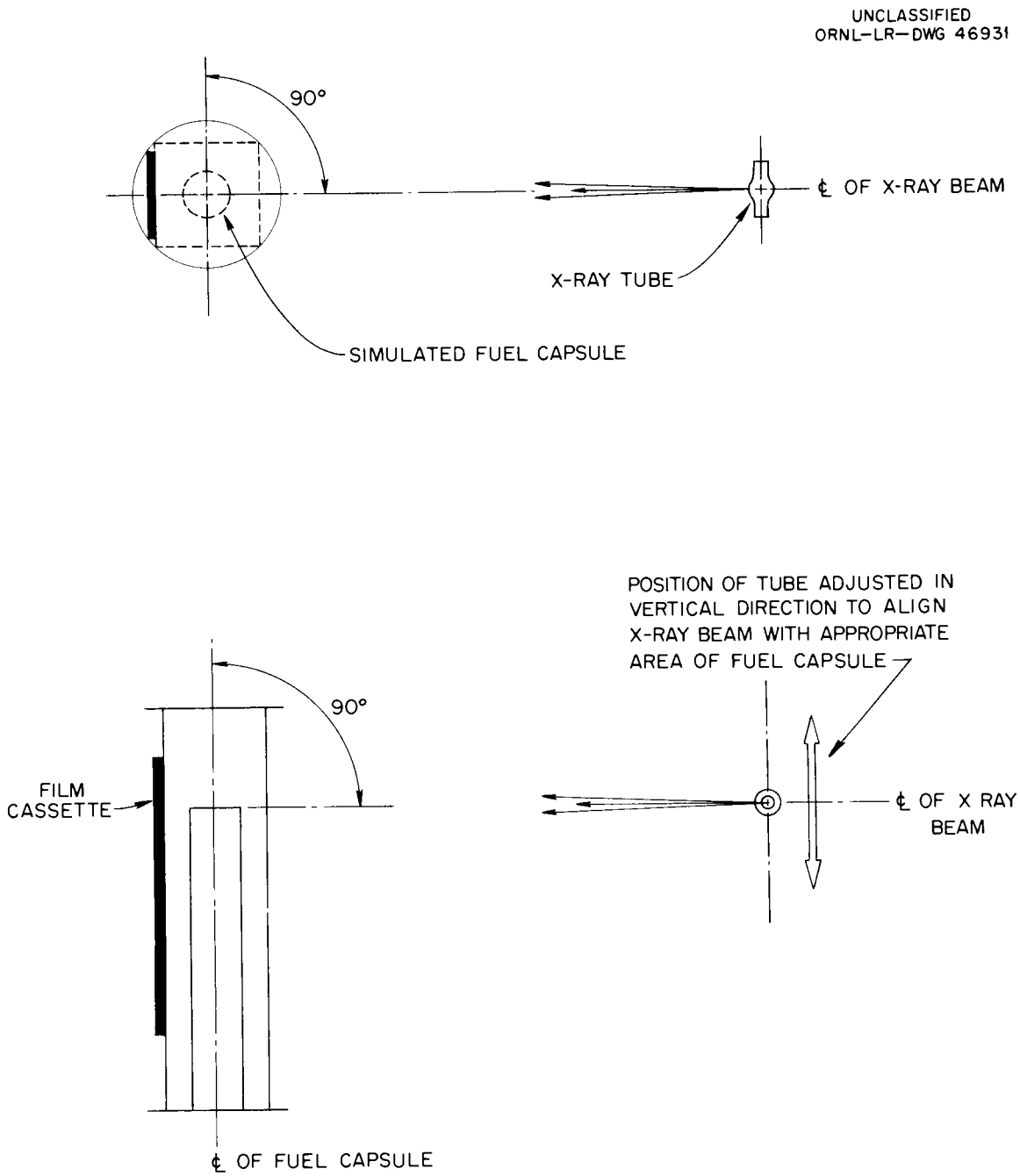

Fig. 7. Radiographic Arrangement.

Table 2. Radial Thermal Gradients of Simulated EGCR Fuel Capsule

Central UO_2 Temperature (°F)	Avg Cladding Wall Temperature (°F)	Avg Temperature Gradient (°F)
1000	785	215
1500	1160	340
2000	1385	615
2500	1520	980
3000	1705	1295

Radiographic techniques developed for the EGCR fuel capsule permit an accuracy of ± 0.003 in. in measuring the axial expansion. A photographic composite, shown in Fig. 8, of radiographs taken at various elevated temperatures illustrates the method used. The common horizontal marks shown in this illustration are platinum wires attached to the aluminum heat sink. These wires are used as reference points from which the growth of the pellets can be measured at any given time.

Radial Expansion

Radial expansion data have been obtained for experiments in which the specimen was a simulated EGCR fuel capsule. Although the accuracy does not approach the accuracy obtained for axial measurements, it does, however, yield semiquantitative data on relative spacing between components which comprise the specimen. Figure 9 demonstrates the radial gap observed between the clad and several UO_2 pellets.

Collapsing Tests

With the advantage of being able to obtain semiquantitative data on the radial displacement of the specimen, the collapsing phenomenon of a cylinder subjected to an external pressure may be observed. The simulated EGCR fuel capsule was used to evaluate this testing technique. An additional pressure seal was fabricated which separated the pressure system into two sections. These sections consist of one which

UNCLASSIFIED
ORNL-LR-DWG 44950

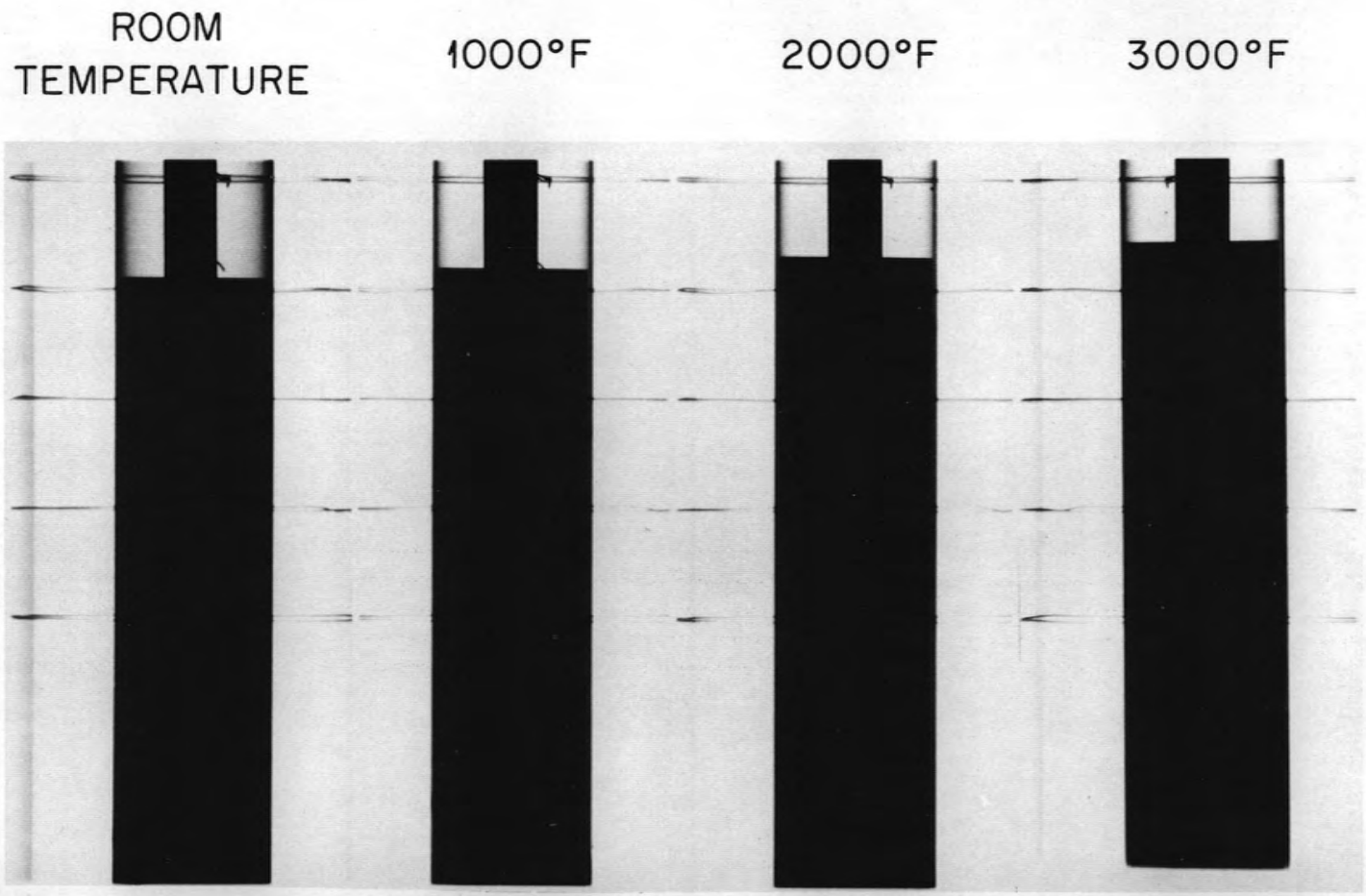

Fig. 8. Axial Growth of UO_2 Pellets Within Simulated GCR Fuel Capsule.

Unclassified
Y-36896

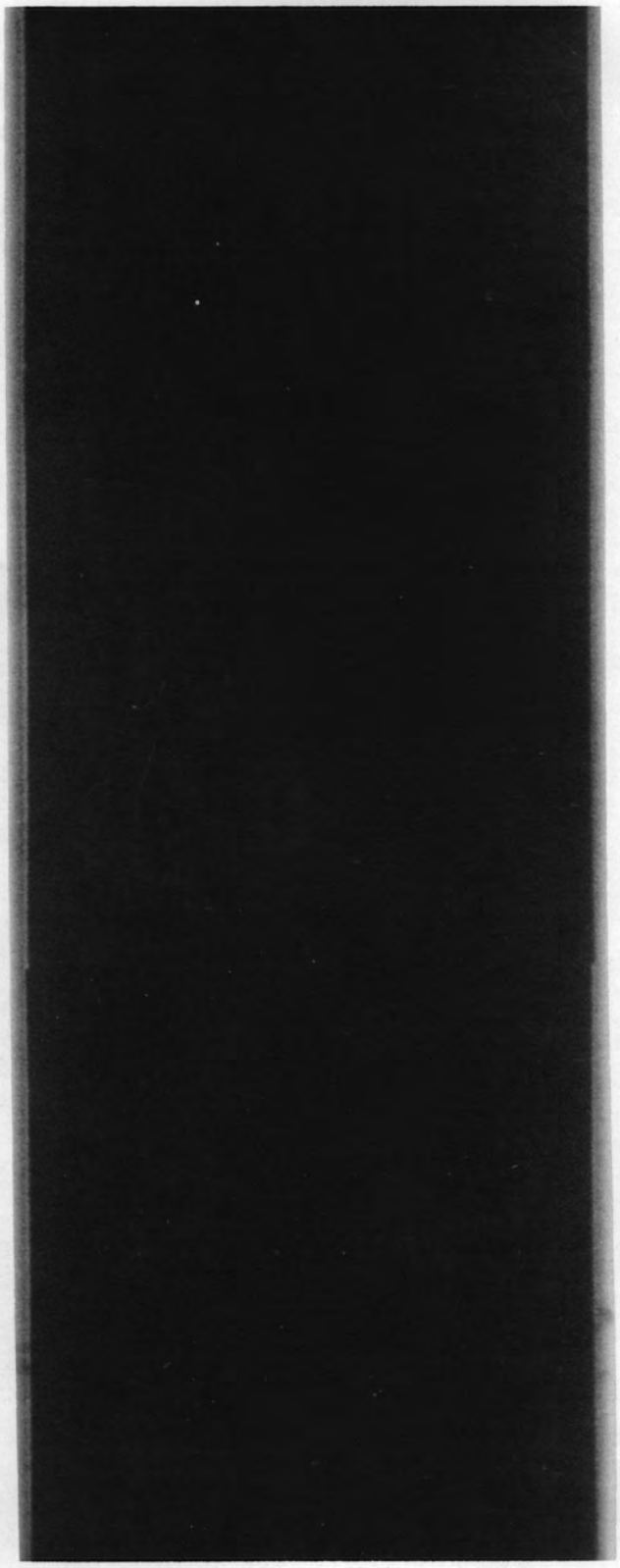

Fig. 9. Radial Gap Between Cladding and UO_2.
(Copy of Actual Radiograph 7X).

controls the pressure inside the capsule and one which controls the pressure outside the cladding wall. The pressure inside the capsule was reduced to approx 1 atm while the pressure in the second chamber (inside the aluminum tube and outside the cladding wall) was adjusted to 325 psi. The collapsing phenomenon was observed until the cladding had completely collapsed about the UO_2 pellet and thereafter while the simulated fuel capsule was subjected to numerous thermal cycles.

Thermal Conductivity

The conditions under which thermal-conductivity measurements are made must be controlled very precisely. The thermal conditions in this apparatus are not consistent enough even at steady-state operating conditions to justify material thermal-conductivity measurements. However, it was found that there is wide disagreement in reported thermal-conductivity values for uranium dioxide; this is illustrated in Fig. 10. Therefore, attempts were made to determine the effective thermal conductivity of the simulated EGCR fuel capsule. The effective thermal conductivity was calculated using the following equation:

$$K_{eff} = \frac{Q \ln \frac{r_2}{r_1}}{2\pi \ell \, (\Delta t)}$$

where

K = thermal conductivity, Btu, hr^{-1}, ft^{-1}, F^{-1}

Q = radial heat flow, Btu, hr^{-1}

ℓ = length of test section

r_2 = outer radius of the simulated fuel capsule, stainless steel cladding

r_1 = inside radius of the UO_2 pellet

Δt = radial temperature gradient between r_1 and r_2

The Δt is obtained as described previously.

The radial heat flow was determined by two methods: (1) by using the power output of the tantalum heater and (2) by interposing a second material so that the heat flow through that material was in series with the radial heat flow through the fuel capsule. In the latter case the thermal conductivity of this material was known as a function of temperature. Therefore, the heat flow could be calculated using the equation above. In this manner K_{eff} could be calculated for the fuel capsule. These values were found to be in close agreement with those shown on Fig. 10,

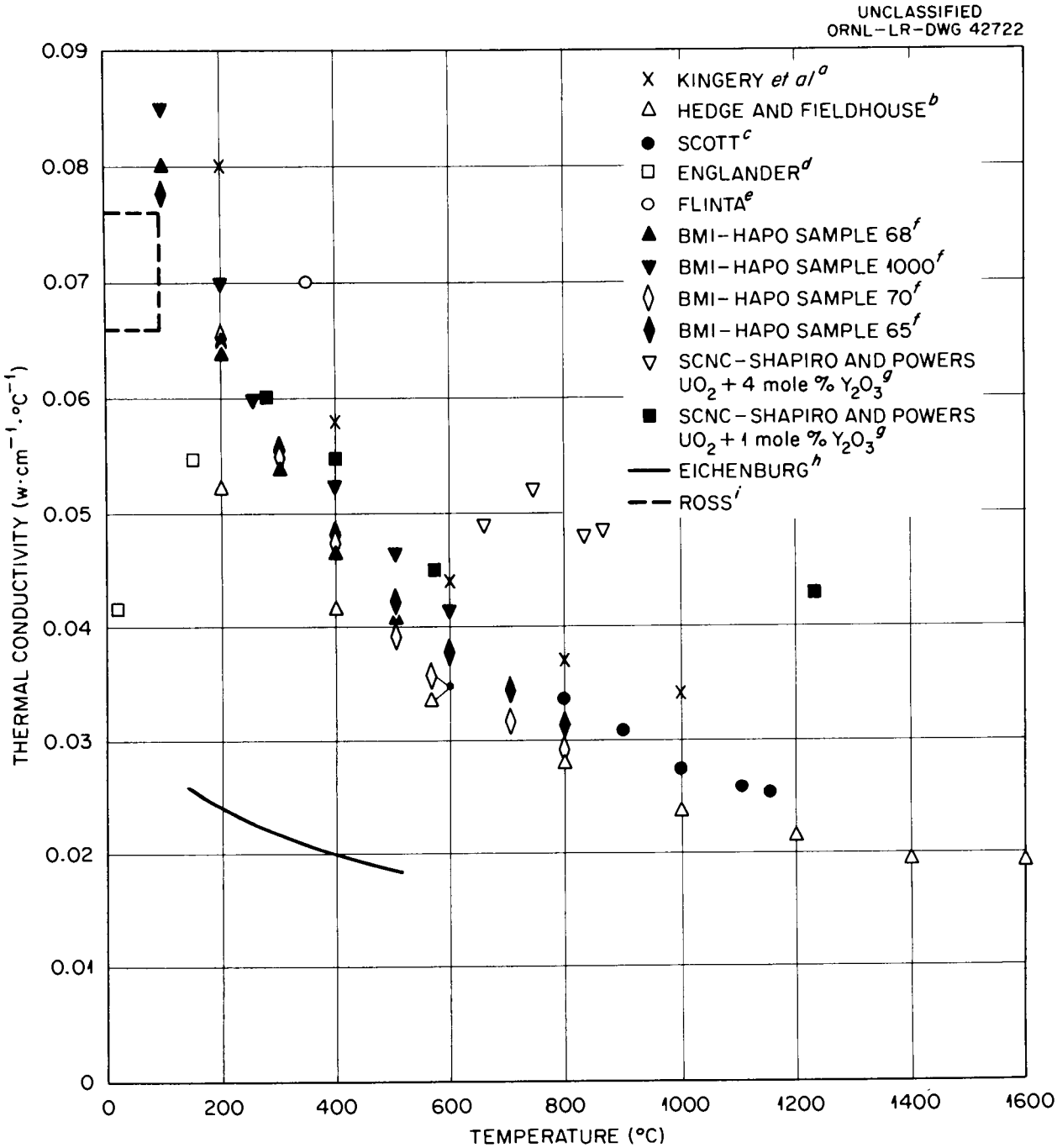

Fig. 10. Thermal Conductivity of UO_2.

reported by Hedge and Fieldhouse.[3] It must be pointed out, however, that the thermal conductivity obtained in this experiment probably is subject to some error. For example, in the calculations, the heat flow through the annulus between the cladding and pellet was assumed to be entirely by conduction. Radiation and convection modes of transfer were not considered. Furthermore, the existence of the gap itself, filled with gas, was not considered in the calculation. This was neglected because it was found that if the gas in the annulus between the cladding and the pellet was changed from argon to helium, no noticeable effect on the heat-transfer conditions of the system was observed. Hence, these other modes of heat transfer were purposely omitted due to the inaccuracies of this testing technique. In addition, the equation as written assumes the material to be homogeneous and that the thermal conductivity of the material is independent of temperature. However, the importance of these data are twofold: (1) it serves to indicate which of the various thermal conductivity values that have been reported are most appropriate for design calculations and (2) it has been proposed that the term, thermal conductivity, of the UO_2 may lose its significance at elevated temperatures because of (a) the radial gap between fuel and cladding and (b) the crack formation within the UO_2. However, these results illustrate that although the effect of cracks in the fuel and the effect of the radial gap may be significant they are not greater than the effects of the experimental techniques used to obtain the thermal conductivity of UO_2.

Short-Time Tensile Tests

The apparatus also can be used for self-resistance heating-type specimens. It is in this situation that both x-ray and an extensometer can be used to determine axial displacement. With a bellows on one end of the rig, the specimen can be subjected to either compressive or tensile loads. A no-load situation requires the counterbalance of electrode weight and adjoining parts by means of a lever arm. Creep tests of single-crystal or polycrystalline material can be made by inverting the apparatus so that the bellows is on the bottom. Although this particular device

[3] J. C. Hedge and F. B. Fieldhouse, Measurement of Thermal Conductivity of Uranium Oxide, AECU-3381 (Sept. 20, 1956).

has not been utilized for the above, the application of similar devices has been made to short-time high-temperature testing.[4,5,6]

CONCLUSIONS

The high-temperature apparatus described in this report can be utilized for many and varied-type experiments. With few modifications, thermal expansion, thermal-fracture behavior, and thermal conductivity may be determined. Thermal-cycling experiments under various cyclic rates may be performed. It is possible that creep studies under tensile or compressive loading of specimens heated by a central tantalum rod or self-resistance heated may be performed in controlled gaseous environments of varying pressure.

ACKNOWLEDGMENT

The authors take this opportunity to acknowledge the contributions of A. E. Carden, Summer Participant from the University of Alabama, for the initial design; members of the Mechanical Properties Group, in particular K. W. Boling and V. R. Bullington, who performed the tests; the Nondestructive Testing Group for the initial radiographic technique development; and K. K. Klindt, Inspection Engineering Department, for the final x-ray and isotope radiographic technique development.

---

[4] W. K. Smith, "Strength of Metals Undergoing Rapid Heating," Short-Time High-Temperature Testing, pp. 5–35, Am. Soc. Metals, Cleveland, Ohio, 1958.

[5] D. P. Moon and W. F. Simmons, Methods for Conducting Short-Time Tensile, Creep and Creep Rupture Tests Under Conditions of Rapid Heating, DMIC Report 121 (Dec. 28, 1959).

[6] D. P. Moon and W. F. Simmons, Selected Short-Time Tensile and Creep Data Obtained Under Conditions of Rapid Heating, DMIC Report 130 (June 17, 1960).

INTERNAL DISTRIBUTION

1. C. E. Center
2. Biology Library
3. Health Physics Library
4. Metallurgy Library
5-6. Central Research Library
7. ORNL - Y-12 Technical Library, Document Reference Section
8-12. Laboratory Records
13. Laboratory Records, R.C.
14. G. M. Adamson, Jr.
15. R. J. Beaver
16. M. Bender
17. D. S. Billington
18. A. L. Boch
19. E. G. Bohlmann
20. B. S. Borie
21. C. J. Borkowski
22. R. B. Briggs
23. N. A. Brown
24. J. V. Cathcart
25. R. A. Charpie
26. G. W. Clark
27. R. E. Clausing
28. R. S. Cockreham
29. J. H. Coobs
30. F. L. Culler
31. J. E. Cunningham
32. J. H. DeVan
33. D. A. Douglas, Jr.
34. L. B. Emlet (K-25)
35. A. P. Fraas
36. J. H. Frye, Jr.
37. A. E. Goldman
38. R. J. Gray
39. B. L. Greenstreet
40. W. R. Grimes
41. J. P. Hammond
42. W. O. Harms
43. T. Hikido
44-48. M. R. Hill
49. E. E. Hoffman
50. A. Hollaender
51. A. S. Householder
52. H. Inouye
53. C. P. Keim
54. M. T. Kelley
55. R. B. Korsmeyer
56. J. A. Lane
57. S. C. Lind
58. R. S. Livingston
59. H. G. MacPherson
60. W. D. Manly
61-63. W. R. Martin
64. R. W. McClung
65. C. J. McHargue
66. A. J. Miller
67. E. C. Miller
68. J. G. Morgan
69. K. Z. Morgan
70. J. P. Murray (Y-12)
71. M. L. Nelson
72. P. Patriarca
73. A. M. Perry
74. D. Phillips
75. P. M. Reyling
76. G. Samuels
77. H. W. Savage
78. J. L. Scott
79. H. E. Seagren
80. E. D. Shipley
81. O. Sisman
82. M. J. Skinner
83. G. M. Slaughter
84. C. O. Smith
85. E. E. Stansbury
86. E. Storto
87. J. A. Swartout
88. E. H. Taylor
89. W. C. Thurber
90. G. M. Tolson
91. D. B. Trauger
92. A. M. Weinberg
93. J. R. Weir, Jr.
94. E. A. Wick
95. C. E. Winters
96. J. H. Koenig (consultant)
97. C. S. Smith (consultant)
98. R. Smoluckowski (consultant)
99. H. A. Wilhelm (consultant)

EXTERNAL DISTRIBUTION

100. J. L. Gregg, Cornell University
101. J. M. Simmons, DRD, AEC, Washington, D.C.
102. E. E. Stansbury, University of Tennessee
103. Division of Research and Development, AEC, ORO
104-583. Given distribution as shown in TID-4500 (15th ed.) under Metallurgy and Ceramics category