MARTIN MARIETTA ENERGY SYSTEMS LIBRARIES

3 4456 0364220 8

ORNL-3043
UC-4 - Chemistry

KINETICS OF THE CATALYZED OXIDATION OF HYDROGEN, CARBON MONOXIDE, AND METHANE BY OXYGEN IN A FLOWING STREAM OF HELIUM

C. D. Scott

CENTRAL
DOCUM
LIBRAR
DO NOT TRANS
If you wish
document, se
and the libr

OAK RIDGE NATIONAL LABORATORY
operated by
UNION CARBIDE CORPORATION
for the
U.S. ATOMIC ENERGY COMMISSION

Printed in USA. Price $0.50. Available from the
Office of Technical Services
Department of Commerce
Washington 25, D.C.

LEGAL NOTICE

This report was prepared as an account of Government sponsored work. Neither the United States, nor the Commission, nor any person acting on behalf of the Commission:

A. Makes any warranty or representation, expressed or implied, with respect to the accuracy, completeness, or usefulness of the information contained in this report, or that the use of any information, apparatus, method, or process disclosed in this report may not infringe privately owned rights; or

B. Assumes any liabilities with respect to the use of, or for damages resulting from the use of any information, apparatus, method, or process disclosed in this report.

As used in the above, "person acting on behalf of the Commission" includes any employee or contractor of the Commission, or employee of such contractor, to the extent that such employee or contractor of the Commission, or employee of such contractor prepares, disseminates, or provides access to, any information pursuant to his employment or contract with the Commission, or his employment with such contractor.

ORNL-3043

Contract No. W-7405-eng-26
CHEMICAL TECHNOLOGY DIVISION
Unit Operations Section

KINETICS OF THE CATALYZED OXIDATION OF HYDROGEN, CARBON MONOXIDE, AND METHANE BY OXYGEN IN A FLOWING STREAM OF HELIUM

C. D. Scott

DATE ISSUED

FEB 7 1960

OAK RIDGE NATIONAL LABORATORY
Oak Ridge, Tennessee
Operated by
UNION CARBIDE CORPORATION
for the
U. S. ATOMIC ENERGY COMMISSION

MARTIN MARIETTA ENERGY SYSTEMS LIBRARIES
3 4456 0364220 8

ABSTRACT

Data from kinetic tests on the oxidation by oxygen catalyzed by a fixed bed of Girdler G-43 platinum catalyst of hydrogen, carbon monoxide, and methane, in a flowing stream of helium, were empirically correlated to give reactor design equations for use in design of catalytic oxidizers for gas-cooled reactor helium purification systems. A typical design for the EGCR purification system was a catalytic oxidizer with 3.77 ft^3 of catalyst. All tests were made in a 2-in.-dia reactor at an average temperature of 500 ± 25°C, a total pressure of 300 psia, mass flow rates of 0.066 to 0.225 g mole/cm^2·min, and contaminant levels of 0.219 to 2.00 vol %.

CONTENTS

		Page
1.0	INTRODUCTION	3
2.0	EXPERIMENTAL WORK	3
	2.1 Reagents	3
	2.2 Experimental Facility	7
	2.3 Experimental Procedure	7
	2.4 Experimental Data	8
3.0	CORRELATION OF DATA	11
	3.1 Apparent Reaction Rate	11
	3.2 Simultaneous Oxidation of Hydrogen, Carbon Monoxide, and Methane	15
	3.3 Reactor Design Equations	15
	3.4 Reaction-rate-controlling Mechanism	16
4.0	REFERENCES	18
5.0	APPENDIX	19
	5.1 Derivation of Flow Reactor Design Equation	19
	5.2 Design Calculations for EGCR Oxidizer	20

1.0 INTRODUCTION

Kinetic tests were made on the oxidation of hydrogen, carbon monoxide, and methane by oxygen catalyzed by a fixed bed of platinum catalyst in a flowing stream of helium. A first process step in several proposed gas-cooled reactor helium purification systems is oxidation of hydrogen, carbon monoxide, and hydrocarbons to water and carbon dioxide.[1-3] Two types of oxidizers have been proposed, oxidation by copper oxide and catalytic oxidation by oxygen. The latter method, with a fixed bed of Girdler Type G-43 platinum catalyst, was proposed by Anderson[2] for the Experimental Gas-Cooled Reactor (EGCR).

Personnel in the Reactor Projects Division have tested a small-scale model of the proposed catalytic oxidizer for the EGCR purification system.[4] However, these tests were of components only and did not include kinetic tests, which would be necessary for proper design of such an oxidizer. This type of information is not available from the manufacturer of the catalyst since it was developed and tested for a different application.[5]

The experimental tests and data correlation presented in this report are for a narrow range of operating conditions which will be usable for design of the EGCR purification system and other similar applications. Work was purposely limited in scope so that usable data would be available for EGCR design in a short time.

2.0 EXPERIMENTAL WORK

2.1 Reagents

The Girdler G-43 catalyst used was in the form of solid right cylinders with nominal dimensions of 1/4 by 1/4 in. The bulk density of the catalyst was 0.95 g/cc and the average specific surface area of two samples was 178 m^2/g. The grades of the gases used in the tests were:

Helium	Navy Grade A, purity ~100%
Hydrogen	99.5% purity
Carbon monoxide	99.5% purity
Methane	99.0% purity
Oxygen	99.5% purity

2.2 Experimental Facility

All tests were made in the Gas-Cooled Reactor Helium Coolant Purification Test Facility[6] (Fig. 2.1). This facility is capable of synthesizing contaminated helium with hydrogen, carbon monoxide, and methane, and oxygen addition to the contaminated gas is possible.

The 2-in.-dia oxidizers which are components of the system were used in this study. Helium contaminated with 0-2% hydrogen, 0-2% carbon monoxide, 0-1% methane, and 0-5% oxygen at 0-325 psig, 30-600°C, and gas flow rates of 0-120 slpm can be delivered to the oxidizer. The oxidizer were fabricated from 2-in.-dia schedule 80 stainless steel pipe with high-pressure (600 psi) flanges at either end (Fig. 2.2). Platinum catalyst bed depths of 3 to 12 in. were used in the oxidizers and there were thermocouples probes every 2 in. within the vessels. Each oxidizer was internally insulated at the top and bottom and externally heated and insulated by a tube furnace.

2.3 Experimental Procedure

All tests were made by the following procedure:

1. The oxidizer was charged with the proper amount of catalyst and heated to the specified operating temperature.
2. A preheated stream of pure helium was then introduced to the oxidizer and the catalyst bed was allowed to reach thermal equilibrium at an average bed temperature of 500 ± 25°C.
3. A predetermined, constant rate of contaminant (hydrogen, carbon monoxide, or methane) was introduced to the gas stream.
4. Oxygen was introduced to the gas mixture just prior to its entry to the 2-in. oxidizer at an initial, constant rate less than that required to give a stoichiometric amount.
5. The oxygen flow rate was increased as a step function periodically until there was no contaminant (H_2, CO, or CH_4) in the reactor off-gas or until the oxygen addition rate was greater than necessary to give a stoichiometric amount.

   The oxidizer off-gas was sampled periodically by a gas adsorption chromatograph using comparative thermal conductivity measurements, and check samples were taken for analysis by mass spectrometry.

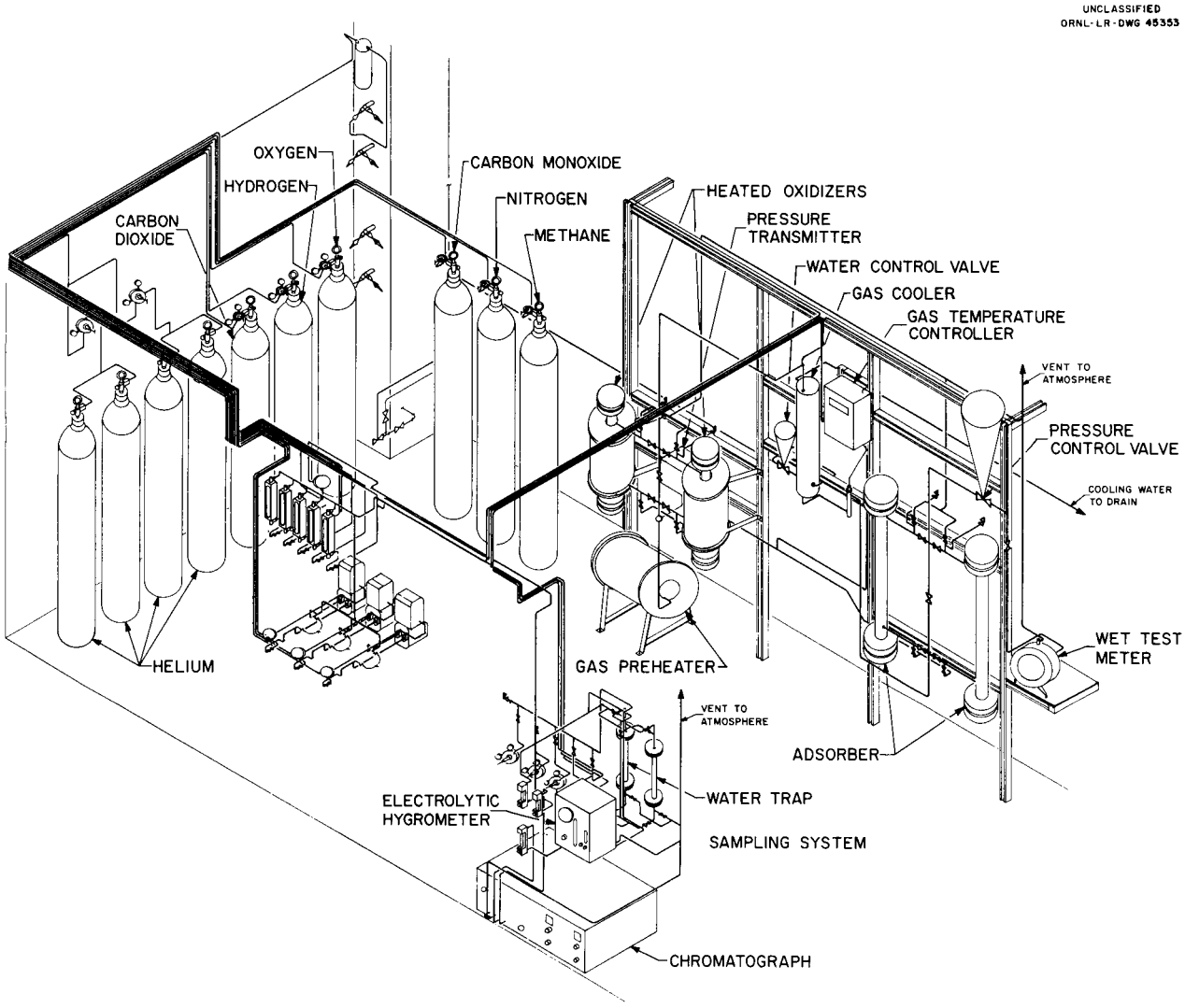

Fig. 2.1. GCR helium coolant purification test facility.

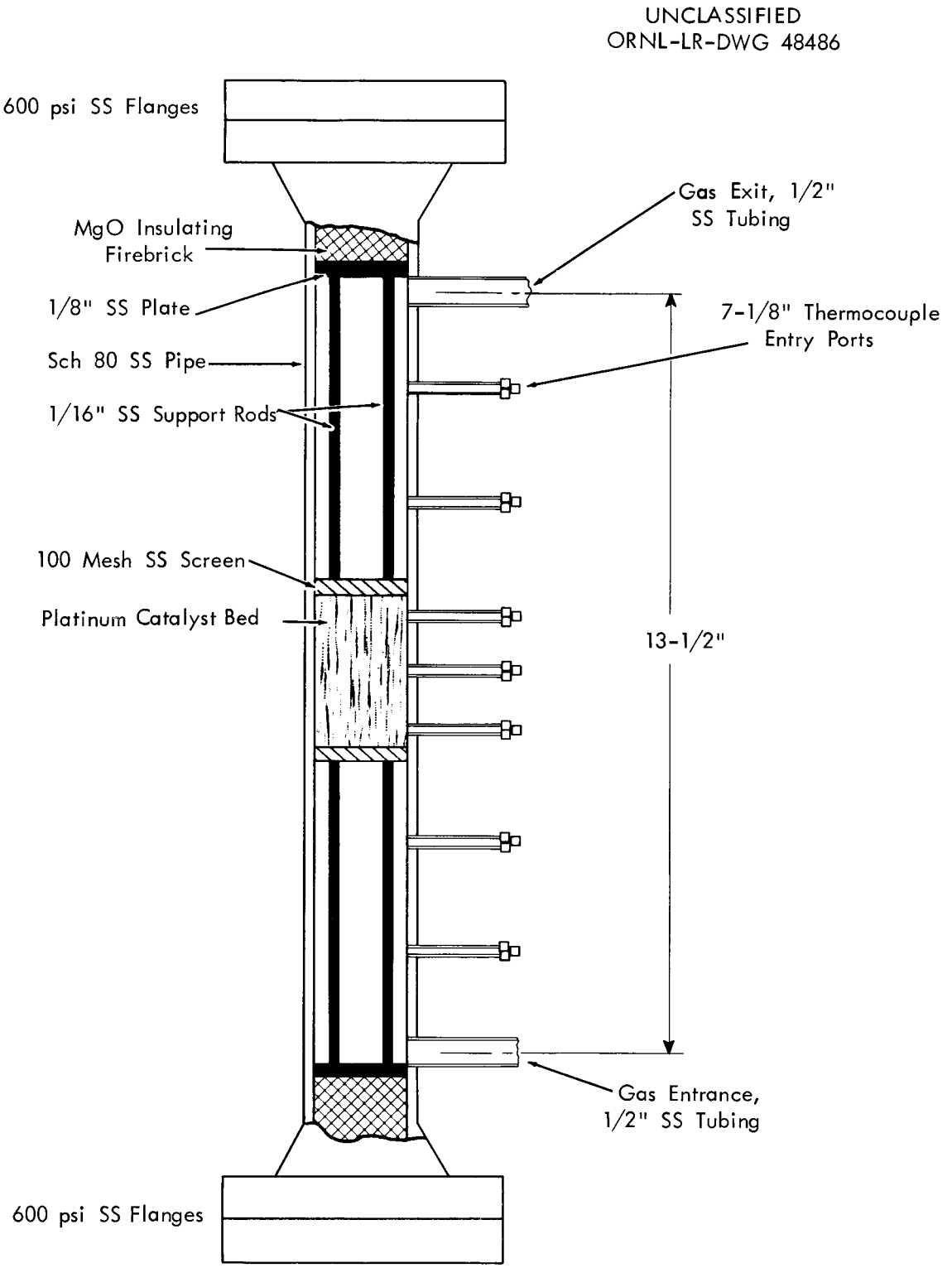

Fig. 2.2. 2-in. oxidizer in helium purification test facility without external heater.

The lower limit of detection of hydrogen by the chromatograph was ~10 ppm and for the oxygen, carbon monoxide, and methane was ~ 5 ppm.

2.4 Experimental Data

From the experimental data taken it was possible to determine the oxygen and contaminant concentration in the helium gas stream prior to its entry to the oxidizer and in the oxidizer off-gas. Thus, it was possible to determine the effectiveness of a specific amount of catalyst under the various experimental conditions.

Catalytic Oxidation of Hydrogen. Twenty-five tests (Table 2.1a) were made at 500°C ± 25°C and 300 psia with catalyst bed depths of 6 and 12 in. for the catalyzed reaction $H_2 + 1/2\ O_2 = H_2O$. Two different gas mass flow rates, approximately 0.0670 and 0.219 g mole/cm^2·min, were used with each bed size; initial hydrogen concentrations were 0.35 to 2.08 vol %.

Catalytic Oxidation of Carbon Monoxide. Fifteen usable tests (Table 2.1b) were made at average bed temperatures of 500 ± 25°C and a total pressure of 300 psia for the catalyzed reaction $CO + 1/2\ O_2 = CO_2$. Three different gas mass flow rates (0.0669, 0.1152, and 0.216 g mole/cm^2·min) were used; the initial carbon monoxide concentration ranged from 0.425 to 1.94 vol %.

Catalytic Oxidation of Methane. Seventeen usable tests (Table 2.1c) were made at average bed temperatures of 525 ± 25°C and a pressure of 300 psia for the catalyzed reaction $CH_4 + 2\ O_2 = CO_2 + 2\ H_2O$. Three different gas mass flow rates (0.0667, 0.1140, and 0.218 g mole/cm^2·min) were used and the initial methane concentration ranged from 0.219 to 0.627 vol %.

Simultaneous Catalytic Oxidation of Hydrogen, Carbon Monoxide, and Methane. Three series of tests were made in which (1) hydrogen and carbon monoxide were co-oxidized by oxygen in the catalytic oxidizer, (2) hydrogen and methane were co-oxidized, and (3) all three contaminants were oxidized (Table 2.2). In these tests a 6-in. bed depth of the G-43 catalyst was used at average bed temperatures of 500 ± 25°C, a total pressure of 300 psia, and an average mass flow rate of 0.0677 g mole/cm^2·min. Initial contaminant concentrations varied from 0.398 to 1.08 vol %.

Table 2.1 Experimental Data from the Kinetic Study of the Oxidation of Hydrogen, Carbon Monoxide, and Methane by Oxygen in a Fixed Bed of Girdler G-43 Catalyst

Run No.	Bed Height, in.	Avg Bed Temp, °C	Total Gas Feed Rate, g moles/min	Concentration, vol % Initial H_2	Initial O_2	Final H_2	Final O_2
a. Reaction $H_2 + 1/2\ O_2 = H_2O$							
4B	6.0	510	1.28	2.00	0.956	0.142	0.027
4C	6.0	490	1.28	2.00	0.900	0.204	0.011
4D	6.0	500	1.28	2.00	0.887	0.238	0.006
4E	6.0	515	1.28	2.00	0.774	0.460	0.004
4F	6.0	490	1.28	2.00	0.691	0.500	0.002
5C	6.0	490	1.27	1.00	0.499	0.013	0.006
5D	6.0	490	1.27	1.00	0.503	0.012	0.009
5E	6.0	490	1.27	1.00	0.517	0.003	0.018
6B	6.0	510	1.26	0.40	0.260	0.002	0.061
6C	6.0	490	1.26	0.40	0.246	0.003	0.048
7A	12.0	490	1.27	0.83	0.413	0.007	0.001
7B	12.0	490	1.27	0.83	0.415	0.004	0.002
7D	12.0	500	1.27	0.83	0.411	0.009	0.001
7E	12.0	490	1.27	0.83	0.409	0.014	<0.001
8B	12.0	505	1.26	0.35	0.175	0.002	0.001
9A	12.0	495	4.15	1.01	0.481	0.052	0.002
9C	12.0	520	4.15	1.01	0.445	0.123	0.001
9D	12.0	500	4.15	1.01	0.399	0.214	0.001
10B	12.0	515	4.13	0.43	0.213	0.006	0.001
11A	6.0	490	4.15	1.05	0.418	0.217	0.002
11B	6.0	500	4.15	1.05	0.447	0.173	0.002
11C	6.0	510	4.15	1.05	0.474	0.124	0.002
11D	6.0	505	4.15	1.05	0.309	0.434	0.001
11E	6.0	500	4.15	1.05	0.240	0.570	<0.001
12A	6.0	510	4.13	0.54	0.221	0.100	0.001
b. Reaction $CO + 1/2\ O_2 = CO_2$							
				CO	O_2	CO	O_2
5A	6.0	510	4.14	0.95	0.3767	0.1969	0.0003
6A	6.0	495	1.30	1.94	0.9613	0.0240	0.0033
7A	3.0	480	1.28	1.06	0.0307	0.9988	0.0001
7B	3.0	485	1.28	1.06	0.4192	0.2252	0.0018
8A	3.0	520	4.14	1.09	0.3142	0.4624	0.0004
8B	3.0	515	4.14	1.09	0.3948	0.3060	0.0028
8C	3.0	520	4.14	1.09	0.4648	0.1710	0.0003
9B	3.0	510	1.27	0.463	0.0071	0.4498	0.0005
9C	3.0	490	1.27	0.463	0.0261	0.4112	0.0002
9F	3.0	510	1.27	0.463	0.2331	0.0316	0.0074
10A	3.0	480	4.10	0.425	0.1613	0.1096	0.0036
10B	3.0	500	4.10	0.425	0.2105	0.0213	0.0086
10C	3.0	505	4.10	0.425	0.1956	0.0478	0.0070
11A	3.0	520	2.20	1.08	0.3372	0.4072	0.0008
11B	3.0	510	2.20	1.08	0.4234	0.2376	0.0022

Table 2.1 (Continued)

Run No.	Bed Height, in.	Avg Bed Temp, °C	Total Gas Feed Rate, g moles/min	Concentration, vol % Initial CH_4	Initial O_2	Final CH_4	Final O_2
c. Reaction $CH_4 + 2\ O_2 = CO_2 + 2\ H_2O$							
1B	6.0	490	1.277	0.4760	0.7149	0.1210	0.0049
1C	6.0	500	1.277	0.4760	0.5800	0.1906	0.0092
2A	6.0	560	1.280	0.5400	0.5092	0.2860	0.0002
2B	6.0	545	1.277	0.5400	0.3081	0.3860	0.0001
3A	6.0	480	1.263	0.2190	0.0101	0.2140	0.0001
3C	6.0	490	1.272	0.2190	0.4746	0.0307	0.0982
5A	6.0	505	4.14	0.3520	0.5725	0.1034	0.0533
7A	6.0	540	4.14	0.4450	0.8708	0.0606	0.1020
7B	6.0	530	4.14	0.4450	0.6500	0.1242	0.0094
8A	6.0	530	4.12	0.3780	0.4770	0.1426	0.0062
9A	3.0	515	2.18	0.3660	0.0122	0.3600	0.0002
9B	3.0	490	2.18	0.3660	0.3666	0.1980	0.0306
9C	3.0	500	2.18	0.3660	0.5325	0.1325	0.0655
10A	3.0	480	1.272	0.3920	0.5351	0.1415	0.0341
10B	3.0	530	1.272	0.3920	0.3639	0.2155	0.0109
11A	3.0	530	2.20	0.6270	0.7552	0.2550	0.0012
11B	3.0	510	2.21	0.6270	0.7668	0.1488	0.0104

Table 2.2 Experimental Results of Simultaneous Catalytic Oxidation of Hydrogen, Carbon Monoxide, and Methane at 500 ± 25°C in a Flowing Stream of Oxygen

Run No.	Concentration, vol % Initial H_2	Initial CO	Initial CH_4	Initial O_2	Final H_2	Final CO	Final CH_4	Final O_2
1A	1.05	0	0	0.39	0.264	-	-	0
1B	1.05	0.80	0	0.41	0.420	0.602	-	0
1C	1.05	0.80	0	0.65	0.064	0.510	-	0
1D	1.05	0.80	0	0.80	0	0.273	-	0.025
2A	1.08	0	0	0.50	0.068	-	-	0
2B	1.08	0	0.91	0.50	0.192	-	0.855	0
2C	1.08	0	0.91	0.77	0.050	-	0.778	0
2D	1.08	0	0.91	0.98	0	-	0.678	0.001
3A	0	0.705	0.398	0.64	-	0.058	0.243	0.001
3B	0	0.705	0.398	0.86	-	0	0.142	0.183
3C	0.71	0.705	0.398	0.90	0	0.022	0.253	0.009
3D	0.71	0.705	0.398	0.86	0.003	0.043	0.313	0.008
3E	0.71	0.705	0.398	0.61	0.029	0.223	0.385	0.003

3.0 CORRELATION OF DATA

Since the purpose of this experimental study was to obtain experimental kinetic data and usable reactor design equations in a short time, no attempt was made to design the experimental program toward obtaining enough data with sufficient accuracy to permit determination of the mechanism of reaction rate control. This type of approach, as presented by Smith[7] and others, requires investigation of a considerable number of process variables and a large effort directed toward calculation and analysis of experimental results.

The approach taken was to empirically correlate the experimental data in a manner similar to that outlined by Weller.[8]

3.1 Apparent Reaction Rate

It was found that the apparent reaction rate for the oxidation of hydrogen, carbon monoxide, and methane at a constant mass flow rate could be expressed by

$$r = K\, p_c^n\, p_O^m \tag{1}$$

where r = apparent reaction rate, g moles of contaminant reacted per cubic centimeter of catalyst bed per minute

K = apparent reaction rate constant at constant flow rate

p_c, p_O = partial pressure of contaminant and oxygen in the gas stream at any point in the reactor, atm

n, m = exponents of p_c and p_O necessary for proper correlation

But since it may be assumed that

$$p = \pi y \tag{2}$$

where π = total pressure, atm, and y = mole fraction of component of interest, then

$$r = \pi^{(n + m)} K y_C^n y_O^m \tag{3}$$

It was found that the apparent reaction rates could be expressed by,

For hydrogen, $$r_H = \pi K_H y_H^{0.5} y_O^{0.5} \tag{4}$$

For carbon monoxide, $$r_C = \pi^{1.5} K_C y_C^{0.5} y_O \tag{5}$$

For methane,

$$r_{CH} = \pi^2 K_{CH} y_{CH} y_O \tag{6}$$

The material balance around a differential volume in the reactor results in the flow reactor design equation (see Sect. 6.1 for derivation).

$$\frac{V}{F} = -\int_{y_o}^{y_f} \frac{dy}{r} \tag{7}$$

where V = volume of catalyst in reactor, cc,

F = gas feed rate, g moles/min

y_o, y_f = mole fraction of contaminant initially and finally

Incorporation of eq. 4, 5, and 6 individually into the flow reactor design equation, after integration, results in the following equations for determining the apparent reaction rate constants:

For hydrogen,

$$K_H = \frac{\sqrt{2}}{\pi(V/F)} \ln \frac{\left[\sqrt{2y_{O_o} y_{H_o}} + y_{H_o} + (2y_{O_o} - y_{H_o})/2\right]}{\left[\sqrt{(2y_{O_o} - y_{H_o})y_{H_f} + y_{H_f}^2} + y_{H_f} + (2y_{O_o} - y_{H_o})/2\right]} \tag{8}$$

For carbon monoxide,

$$K_C = \frac{1}{\pi^{1.5}(V/F)\sqrt{y_{C_o} - 2y_{O_o}}} \ln \frac{\left(\sqrt{y_{C_o}} - \sqrt{y_{C_o} - 2y_{O_o}}\right)\left(\sqrt{y_{C_f}} + \sqrt{y_{C_o} - 2y_{O_o}}\right)}{\left(\sqrt{y_{C_o}} + \sqrt{y_{C_o} - 2y_{O_o}}\right)\left(\sqrt{y_{C_f}} - \sqrt{y_{C_f} - 2y_{O_o}}\right)} \tag{9}$$

For methane,

$$K_{CH} = \frac{1}{\pi^2(V/F)(y_{O_o} - 2y_{CH_o})} \ln \frac{y_{C_f} y_{O_o}}{y_{CH_o} y_{O_f}} \tag{10}$$

where y_{H_o}, Y_{C_o}, y_{CH_o}, y_{O_o} = initial mole fractions of H_2, CO, CH_4, and O_2

y_{H_f}, y_{C_f}, y_{CH_f}, y_{O_f} = final mole fractions of H_2, CO, CH_4, and O_2

All three reaction rate constants were found to be mass-flow-rate dependent with the following average values for K (Table 3.1):

Table 3.1 Apparent Reaction Rate Constants

Run No.	Mass Flow Rate, g moles/sq cm.min	Reaction Rate Constant, g moles/cc.atm
Catalyzed Reaction of $H_2 + 1/2\ O_2 = H_2O$		
4B	0.0677	0.000935
4C	0.0677	0.001052
4D	0.0677	0.000935
4E	0.0677	0.000757
4F	0.0677	0.000758
5C	0.0670	0.001320
5D	0.0670	0.001261
5E	0.0670	0.001269
6B	0.0666	0.000742
6C	0.0666	0.000782
7A	0.0670	0.000813
7B	0.0670	0.000807
7D	0.0670	0.000793
7E	0.0670	0.000803
8B	0.0666	0.000768
9A	0.219	0.00176
9C	0.219	0.00160
9D	0.219	0.00134
10B	0.218	0.00236
11A	0.219	0.00265
11B	0.219	0.00257
11C	0.219	0.00277
11D	0.219	0.00194
11E	0.219	0.00160
12A	0.218	0.00277
Catalyzed Reaction of $CO + 1/2\ O_2 = CO_2$		
6A	0.0680	0.0333
7A	0.0670	0.0235
7B	0.0670	0.0348
9B	0.0665	0.0258
9C	0.0665	0.0302
9F	0.0665	0.0416

Run	Mass Flow Rate, g moles/sq cm.min	Reaction Rate Constant g moles/cc.atm
11A	0.1152	0.0540
11B	0.1152	0.0574
5A	0.217	0.0915
8A	0.217	0.1116
8B	0.217	0.0912
8C	0.217	0.0993
10A	0.215	0.1091
10B	0.215	0.1360
10C	0.215	0.1091
Catalyzed Reaction of $CH_4 + 2\ O_2 = CO_2 + 2\ H_2O$		
1B	0.0668	0.0650
1C	0.0668	0.0769
2A	0.0670	0.0535
2B	0.0668	0.0447
3A	0.0661	0.0454
3C	0.0666	0.0455
10A	0.0666	0.0586
10B	0.0666	0.0585
9A	0.114	0.0804
9B	0.114	0.0900
9C	0.114	0.0814
5A	0.217	0.1622
8A	0.216	0.1165
7A	0.217	0.1422
7B	0.217	0.1680
11A	0.220	0.1585
11B	0.221	0.0970

Average Mass Flow Rate, G, g moles/cm^2.min	K_H
For hydrogen,	
0.0665	0.00098
0.225	0.00214
For carbon monoxide,	K_C
0.0669	0.0664
0.1152	0.1054
0.216	0.2116
For methane	K_{CH}
0.0667	0.560
0.1140	0.836
0.218	0.1407

The apparent reaction rate constant at constant mass flow rate can be incorporated into an expression for a rate constant for any flow rate:

$$K = kG^{\theta} \quad \text{or} \quad k = K/G^{\theta} \tag{11}$$

where k = rate constant for all mass flow rates

G = mass flow rate, g moles/cm^2·min

θ = exponent of G necessary for correlation

By use of the values for K_H, K_C, and K_{CH} at the various flow rates, it was found that

$$K_H = 0.00571G^{0.65} \tag{12}$$

$$K_C = 0.9506G^{0.982} \tag{13}$$

$$K_{CH} = 0.453G^{0.772} \tag{14}$$

The apparent reaction rates can then be expressed by:

For hydrogen,

$$r_H = 0.00571\pi G^{0.65} y_H^{0.5} y_O^{0.5} \tag{15}$$

For carbon monoxide,

$$r_C = 0.950\pi^{1.5} G^{0.982} y_C^{0.5} y_O \tag{16}$$

For methane,

$$r_{CH} = 0.453\pi^2 G^{0.772} y_{CH} y_O \tag{17}$$

3.2 Simultaneous Oxidation of Hydrogen, Carbon Monoxide, and Methane

The three series of tests made with simultaneous oxidation of two or more contaminants showed that the preference of oxidation in the catalytic bed was hydrogen first, carbon monoxide second, and methane last. That is, the major portion of the hydrogen was oxidized prior to significant carbon monoxide or methane oxidation and the major portion of the carbon monoxide was oxidized prior to significant methane oxidation. Although these effects were not quantitative, for a conservative reactor design it should be assumed that the first portion or zone of the catalytic bed will be utilized for hydrogen oxidation by the total amount of oxygen available, the second zone for carbon monoxide oxidation by the total remaining oxygen, and the final portion of the oxidizer will oxidize the methane with the oxygen remaining after both hydrogen and carbon monoxide oxidation.

3.3 Reactor Design Equations

One of the main purposes of this work was to establish necessary design equations for fixed bed catalytic oxidation with Girdler G-43 platinum catalyst in helium purification systems. The design equations can be developed by rearranging eqs. 8, 9, and 10 and incorporating eqs. 12, 13, and 14 for the apparent reaction rate constants. The resulting design equations are:

For hydrogen,

$$V_H = \frac{248\ F}{\pi G^{0.65}} \ln \frac{\left[\sqrt{2y_{O_o} y_{H_o}} + y_{H_o} + (2y_{O_o} - y_{H_o})/2\right]}{\left[\sqrt{(2y_{O_o} - y_{H_o})\, y_{H_f} + y_{H_f}^{\ 2}} + y_{H_f} + (2y_{O_o} - y_{H_o})/2\right]} \qquad 18)$$

For carbon monoxide where oxygen is less than stoichiometric,

$$V_C = \frac{1.052\ F}{\left(\pi^{1.5} G^{0.982}\right)\sqrt{y_{C_o} - 2y_{O_o}}} \times$$

$$\times \ln \frac{\left(\sqrt{y_{C_o}} - \sqrt{y_{C_o} - 2y_{O_o}}\right)\left(\sqrt{y_{C_f}} + \sqrt{y_{C_o} - 2y_{O_o}}\right)}{\left(\sqrt{y_{C_o}} + \sqrt{y_{C_o} - 2y_{O_o}}\right)\left(\sqrt{y_{C_f}} - \sqrt{y_{C_o} - 2y_{O_o}}\right)} \qquad (19)$$

For carbon monoxide where oxygen is greater than stoichiometric,

$$V_C = \frac{2.10\ F}{\left(\pi^{1.5} G^{0.982}\right)\sqrt{2y_{O_o} - y_{C_o}}} \times$$

$$\times \left[\tan^{-1}\sqrt{y_{C_o}/(2y_{O_o} - y_{C_o})} - \tan^{-1}\sqrt{y_{C_f}/(2y_{O_o} - y_{C_o})}\right] \qquad (20)$$

For methane,

$$V_{CH} = \frac{2.2\ F}{\pi^2\ G^{0.859}\ (2y_{C_o} - y_{O_o})} \ln \frac{y_{C_f} y_{O_o}}{y_{C_o} y_{O_f}} \qquad (21)$$

where V = volume of platinum catalyst necessary for the oxidation, cc.

It should be noted that when simultaneous oxidation of two or more contaminants is contemplated, necessary reactor volumes are additive for each contaminant and the oxygen mole fraction to be used is the total un-used oxygen in the gas stream (Sect. 5.2).

3.4 Reaction-rate-controlling Mechanism

Although the tests made in this study were not exhaustive enough to absolutely establish the rate-controlling mechanism, there was definite indication that mass transfer of both the contaminant and oxygen to the solid pellet from the bulk gas stream contributed to the reaction rate control. By the conventional two-film theory this would mean that mass transfer through a stagnant gas film surrounding the solid pellet was an important factor.

This rate-controlling step was evident by the reaction-rate dependence on the mass flow rate, which ranged from $G^{0.65}$ to $G^{0.982}$. According to conventional theory and correlations, this dependence should be approximately $G^{0.8}$ if other variables are held constant where mass transfer through the gas film is controlling.[9]

3.5 GCR Application of Platinum Catalyst Oxidizer

EGCR. The design criteria established for the EGCR oxidizer[10] plus addition of some capacity for methane oxidation gives the following gas impurity levels for the EGCR oxidizer:

Contaminant	Gas, vol % Impure	Purified
H_2 (ref 11)	2.3	<0.1
CO (ref 11)	2.3	<0.1
CH_4	0.01	<0.005
O_2	-	0.00001

(There are no requirements for methane oxidation in EGCR design specification, but it is felt that a realistic design should include provisions for this contaminant. It is assumed that 10 ppm of oxygen contamination from the oxidizer can be tolerated.)

From the above data, $y_{H_o} = 0.023$ $y_{C_o} = 0.023$ $y_{CH_o} = 0.0001$

$y_{H_f} = 0$ $y_{C_f} = 0$ $y_{CH_f} = 0.00005$

and y_{O_o} and y_{O_f} will depend on the stoichiometry of the various reactions, with the final $y_{O_f} = 0.00001$.

With these criteria and the reactor design equations and assuming that the maximum mass flow rate tested, G = 0.220 g mole/cm^2·min, is used, the necessary volume of the catalytic bed would be

$V_H = 14{,}000$ cc, $V_C = 2450$ cc, $V_{CH} = 90{,}000$ cc

The total volume would then be 106,450 cc or 3.77 ft^3 (see Sect. 5.2 for detailed calculations).

With the prescribed EGCR purification system, total flow rate of 130 lb/hr or 245 g moles/min,[2] and at the mass flow rate to be used, 0.220 g moles/cm^3·min, a vessel 15 in. inside diameter and 38 in. long would contain the catalytic bed.

Other GCR Applications. Although the range of experimental conditions used in this study was limited, the results should have application for other gas-cooled reactors which will operate at a pressure and with helium purity requirements similar to those of the EGCR. If the helium purity requirements are more restrictive, and especially if small amounts of oxygen addition by the catalytic oxidizer cannot be tolerated (such as will

be the case for a high-temperature GCR), another type of oxidizer should be considered, e.g. a copper oxide fixed bed.[10]

The effects of changing the total pressure of the gas from 300 psia or operating at a temperature other than 500°C were not investigated; however, if these changes are no more than ± 100°C or ± 100 psi, the correlations presented here could probably be used in the range of flow rates and contamination levels tested.

4.0 REFERENCES

1. "The ORNL Gas-Cooled Reactor, Part 3," ORNL-2500 (1958).
2. F. A. Anderson, "Proposed Helium Purification System for the Experimental Gas-Cooled Reactor (EGCR)," ORNL-2819 (1959).
3. Kaiser Engineers, "Gas-cooled Power Reactor Preliminary Design, 30,000-kw Prototype Partially Enriched Uranium Nuclear Power Plant," IDO-24027 (1959).
4. R. E. MacPherson and A. M. Smith, "Preliminary Report on Operation of the EGCR Purification System Prototype," CF-60-10-42 (1960).
5. Personal communications with Mr. Allan of the Technical Service Department of Chemical Products Division of Chemetron Corp., Louisville, Ky., July 20, 1960.
6. M. E. Whatley et al., "Unit Operations Section Monthly Progress Report, February 1960," CF-60-2-56.
7. J. M. Smith, "Chemical Engineering Kinetics," McGraw-Hill Book Co., New York, 1956.
8. S. Weller, "Analysis of Kinetic Data for Heterogeneous Reactions," J.A.I.Ch.E., 2: 39 (1956).
9. G. G. Brown et al., "Unit Operations," p. 518, John Wiley and Sons, New York, 1950.
10. C. D. Scott, "Oxidation of Hydrogen and Carbon Monoxide in Helium by Use of CuO. I. Preliminary Results," CF-60-7-26 (1960).
11. R. B. Korsmeyer, ORNL, personal communication to J. C. Suddath, ORNL, May 1960.

5.0 APPENDIX

5.1 Derivation of Flow Reactor Design Equation

Consider a differential volume of the fixed bed, dV. If it is assumed that the gas flow rate, F, is constant throughout the reactor, then the flow of contaminant, x, into the differential volumes is Fy_x, where y_x is the fraction of x in F, and the flow of contaminant out of the differential volume is $F(y_x + dy_x)$, where dy_x is the change in y_x due to the differential volume:

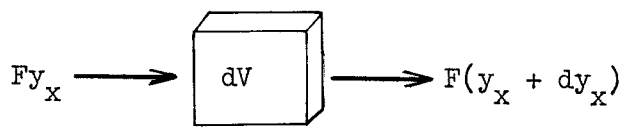

If the reaction rate of x is r in the differential volume, then, by the law of conservation of matter, the amount of x entering minus the amount of x leaving must be equal to the amount of x lost or reacted:

$$Fy_x - F(y_x + dy_x) = rdV \tag{22}$$

After simplifying and rearranging this becomes

$$\frac{dV}{F} = -\frac{dy_x}{r} \tag{23}$$

or

$$\int \frac{dV}{F} = -\int \frac{dy_x}{r} \tag{24}$$

If we integrate over the entire volume of the reactor, V_R, and from an entering fraction of x, y_{x_o}, to a final fraction of x, y_{x_f}, the limits of integration for eq. 24 become

$$\int_o^{V_R} \frac{dV}{F} = -\int_{y_{x_o}}^{y_x} \frac{dy_x}{r} \tag{25}$$

Integration of the left-hand side of eq. 25 gives the flow reactor design equation:

$$\frac{V_R}{F} = -\int_{y_{x_o}}^{y_{x_f}} \frac{dy_x}{r} \tag{26}$$

The right-hand side of the equation can be integrated when the reaction rate, r, is available in terms of the fraction of x in the feed, y_x, at any point in the reactor.

5.2 Design Calculations for EGCR Oxidizer

Assume that the following contamination levels will be in the oxidizer gas streams:

Contaminant	Oxidizer Feed Gas, mole fraction	Oxidizer Off-gas, mole fraction
H_2	0.023	<0.001
CO	0.023	<0.001
CH_4	0.0001	<0.00005

The total mass flow rate, G, will be 0.220 g mole/cm^2.min; the oxidizer temperature will be 500°C; the total pressure will be 300 psia; and the total gas flow, F, will be 130 lb/hr or 245 g moles/min. With the following stoichiometry,

$$H_2 + 1/2\ O_2 \longrightarrow H_2O$$

$$CO + 1/2\ O_2 \longrightarrow CO_2$$

$$CH_4 + 2O_2 \longrightarrow CO_2 + 2\ H_2O$$

the initial oxygen content should be at a mole fraction of

$$y_{O_o} = \frac{0.023}{2} + \frac{0.023}{2} + 2(0.00010 - 0.00005) + 0.00001 = 0.02311$$

Assuming complete reaction of hydrogen and carbon monoxide,

$$\left(y_{O_f}\right)_{H_2} = \left(y_{O_o}\right)_{CO} = y_{O_o} - y_{H_o}/2 = 0.02311 - 0.0115 = 0.01161$$

and

$$\left(y_{O_f}\right)_{CO} = \left(y_{O_o}\right)_{CH_4} \quad \left(y_{O_o}\right)_{CO} - y_{C_o}/2 = 0.01161 - 0.0115 = 0.00011$$

The necessary mole fractions of the various components will be:

For hydrogen oxidation,

$$y_{H_o} = 0.023000 \qquad y_{H_f} = 0 \qquad y_{O_o} = 0.023110 \qquad y_{O_f} = 0.11610$$

For carbon monoxide oxidation,

$$y_{C_o} = 0.023000 \qquad y_{C_f} = 0 \qquad y_{O_o} = 0.1161 \qquad y_{O_f} = 0.00011$$

For methane,

$$y_{CH_o} = 0.000100 \qquad y_{CH_f} = 0.000050 \qquad y_{O_o} = 0.000110 \qquad y_{O_f} = 0.000010$$

From eq. 18, the volume of catalytic bed necessary for the hydrogen oxidation will be

$$V_H = \frac{(248)(245)}{(20.4)(0.220)^{0.65}} \times$$

$$\times \ln \frac{\left[\sqrt{2(0.02311)(0.023)} + 0.023 + (0.04622 - 0.0230)/2\right]}{\left[\sqrt{(0.04622 - 0.0230)(0) + 0} + 0 + (0.04622 - 0.0230)/2\right]} = 14{,}000 \text{ cc}$$

From eq. 20 the volume of catalytic bed necessary for the carbon monoxide oxidation will be

$$V_C = \frac{(2.1)(245)}{(20.4)^{1.5}(0.220)^{0.982}\sqrt{0.02322 - 0.023}} \times$$

$$\times \left[\tan^{-1}\sqrt{\frac{0.023}{0.02322 - 0.023}} - \tan^{-1}\sqrt{0} = 2450 \text{ cc}\right]$$

From eq. 21, the volume of catalytic bed necessary for the methane oxidation will be

$$V_{CH} = \frac{(2.2)(245)}{(20.4)^2\,(0.220)^{0.859}\,(0.0002 - 0.00011)} \times$$

$$\times \ln \frac{(0.00005)(0.00011)}{(0.00010)(0.00001)} = 90{,}000 \text{ cc}$$

The total volume of the catalytic bed would be

$$V = V_H + V_C + V_{CH} = 14{,}000 + 2450 + 90{,}000 = 106{,}450 \text{ cc or } 3.77 \text{ ft}^3$$

For a mass flow rate of 0.220 g mole/cm^2·min and a total flow of 245 g moles/min, a reactor cross sectional area, A, of 245/0.220 = 1114 cm^2 would be needed. This would be a reactor inside diameter, D, of $\sqrt{(4)(1114)/\pi}$ = 37.6 cm or ~15 in. The reactor length, L, would then be L = V/A = 106,450/1114 = 95.6 cm or ~38 in.

ORNL-3043
UC-4 - Chemistry
TID-4500 (16th ed.)

INTERNAL DISTRIBUTION

1. C. E. Center
2. Biology Library
3. Health Physics Library
4-5. Central Research Library
6. Reactor Division Library
7-26. Laboratory Records Department
27. Laboratory Records, ORNL R.C.
28. A. M. Weinberg
29. L. B. Emlet (K-25)
30. J. P. Murray (Y-12)
31. J. A. Swartout
32. E. H. Taylor
33. E. D. Shipley
34-35. F. L. Culler
36. M. L. Nelson
37. W. H. Jordan
38. C. P. Keim
39. J. H Frye
40. S. C. Lind
41. A. H. Snell
42. A. Hollaender
43. K. Z. Morgan
44. M. T. Kelley
45. T. A. Lincoln
46. R. S. Livingston
47. A. S. Householder
48. C. S. Harrill
49. C. E. Winters
50. H. E. Seagren
51. D. Phillips
52. J. C. Amos
53. M. Bender
54. J. Foster
55. A. P. Fraas
56. P. A. Haas
57. R. W. Horton
58. R. B. Korsmeyer
59. E. Lamb
60. R. E. MacPherson
61. F. H. Neill
62. A. D. Ryon
63. H. W. Savage
64. C. D. Scott
65. A. M. Smith
66. J. C. Suddath
67. C. D. Watson
68. W. K. Eister
69. F. R. Bruce
70. D. E. Ferguson
71. M. E. Whatley
72. H. E. Goeller
73. C. W. Hancher
74. R. A. Charpie
75. J. A. Lane
76. M. J. Skinner
77. R. E. Blanco
78. G. E. Boyd
79. W. E. Unger
80. R. S. Cockreham
81. A. T. Gresky
82. E. D. Arnold
83. C. E. Guthrie
84. J. W. Ullmann
85. K. B. Brown
86. P. M. Reyling
87. J. C. Bresee
88. R. G. Wymer
89. J. W. Youngblood
90. D. L. Katz (consultant)
91. I. Perlman (consultant)
92. T. H. Pigford (consultant)
93. C. E. Larson (consultant)
94. H. Worthington (consultant)
95. J. H. Rushton (consultant)
96. ORNL - Y-12 Technical Library, Document Reference Section

EXTERNAL DISTRIBUTION

97. R. Daley, Los Alamos Scientific Laboratory
98. K. G. Steyer, General Atomic
99. Division of Research and Development, AEC, ORO
100-691. Given distribution as shown in TID-4500 (16th ed.) under Chemistry category (75 copies - OTS)