X-821

ORNL MASTER COPY

OAK RIDGE NATIONAL LABORATORY
Operated by
UNION CARBIDE NUCLEAR COMPANY
Division of Union Carbide Corporation
UCC
Post Office Box X
Oak Ridge, Tennessee

External Transmittal Authorized

ORNL
CENTRAL FILES NUMBER
60 - 10 - 6

DATE: October 4, 1960

COPY NO. 35

SUBJECT: Fundamental Studies in Heat Transfer and Fluid Mechanics, Status Report July 1, 1959 – Feb. 29, 1960

TO: Distribution

FROM: H. W. Hoffman, W. R. Gambill, J. J. Keyes, Jr., and G. J. Kidd, Jr.

SUMMARY

Experimental determinations of heat-transfer coefficients, burnout heat fluxes, and friction factors have been made for swirl flow of low- and moderate-pressure water through electrically heated aluminum, nickel, and copper tubes containing full-length Inconel twisted tapes. For nonboiling conditions, swirl-flow heat-transfer coefficients were successfully correlated with both the Froude modulus (the ratio of inertial to centrifugal forces) and a grouping of the Grashof and Reynolds moduli (ratio of buoyant to inertial forces). Under local-boiling conditions the effect of tape-twist ratio was clearly noted with the tighter tapes supporting a higher surface heat flux for a given superheat. At low pressures, swirl-flow burnout heat fluxes were about twofold larger than for straight flow through the same tube at equal pumping power. Recommended correlations are given for the separate flow regimes and for burnout. Friction factors for swirl flow were observed to be as much as threefold larger than those found for axial flow in smooth pipes.

NOTICE

This document contains information of a preliminary nature and was prepared primarily for internal use at the Oak Ridge National Laboratory. It is subject to revision or correction and therefore does not represent a final report. The information is not to be abstracted, reprinted or otherwise given public dissemination without the approval of the ORNL patent branch, Legal and Information Control Department.

LEGAL NOTICE

This report was prepared as an account of Government sponsored work. Neither the United States, nor the Commission, nor any person acting on behalf of the Commission:

A. Makes any warranty or representation, expressed or implied, with respect to the accuracy, completeness, or usefulness of the information contained in this report, or that the use of any information, apparatus, method, or process disclosed in this report may not infringe privately owned rights; or

B. Assumes any liabilities with respect to the use of, or for damages resulting from the use of any information, apparatus, method, or process disclosed in this report.

As used in the above, "person acting on behalf of the Commission" includes any employee or contractor of the Commission, or employee of such contractor, to the extent that such employee or contractor of the Commission, or employee of such contractor prepares, disseminates, or provides access to, any information pursuant to his employment or contract with the Commission, or his employment with such contractor.

A systematic study has been undertaken of the effects of injection velocity, mass flow rate, pressure, and tube geometry on the vortex strength and the velocity profile in a gaseous jet-driven vortex tube under conditions approximating a two-dimensional flow field. It was found for the same jet input power and pressure that subsonic injection was more effective than supersonic injection in generating vorticity and that reducing the tube diameter resulted in a pronounced increase in the peripheral Mach number. No effect of L/d was observed. The degree of approach to potential vortex flow appears to be influenced primarily by the ratio of the radial to tangential Reynolds modulus (the higher the ratio, the closer to potential vortex flow). An estimate of the degree of turbulence at the tube wall was obtained by using the velocity-profile data to estimate a virtual viscosity (μ^*/μ) for the fluid. The lowest value determined for μ^*/μ was 30 for a wall pressure of 2.5 psia; it is concluded that flow near the wall in jet-driven vortex tubes will in all probability be turbulent for pressures in excess of a few tenths psia.

The need for quantitative information on the nature of turbulent instabilities near a wall and their relationship to thermal transients at the wall is discussed. A projected program is described.

INTRODUCTION

Many problems exist with respect to the flow of fluids and of heat within both the core and the external components of a reactor system which are of so general a nature as to be outside the scope of research and development programs oriented toward specific reactors. On the other hand, the gains in reactor technology accruing from the solution of such problems is sufficiently great to warrant extended support of these studies on a fundamental basis. The researches described in this report fall into this category of basic investigations. In each case the studies derive from experiments originally designed either to establish the thermal characteristics of reactors under development at the Oak Ridge National Laboratory or to provide solutions to limitations on the performance of these reactors. As will be noted, the ramifications of these problems extend beyond the needs of the specific fluid-fuel or gas-cooled reactors which occasioned the initial investigations.

This program has been carried out within the Research Department of the Reactor Division (formerly Engineering Research Section of the Reactor Experimental Engineering Division) of the Oak Ridge National Laboratory. The succeeding sections of this report are concerned with (1) the delineation of the characteristics of two-phase heat transfer with vortex flow, (2) the determination of the fluid mechanics of gaseous vortex flows with the aim of maximizing the vortex strengths, and (3) the study of turbulent instabilities near a solid-fluid boundary in relation to thermal transients at the surface.

Vortex Heat Transfer and Fluid Dynamics

For many reactor applications, whether the goal is generation of high neutron fluxes or economic power or compactness, high specific powers are not only desirable but often a necessary requirement. In achieving this goal, the interrelated problems of heat removal and fuel containment impose serious limitations on the design. If materials were available that had very high melting temperatures and satisfactory thermal, corrosion, and mechanical properties at elevated temperatures, the heat removal aspects of these reactor designs would become less critical. Unfortunately such metal or ceramic materials are not now available, though work in this direction is being actively pursued. Thus the task remains of transferring large quantities of heat to a coolant fluid while maintaining clad or containing-vessel surface temperature at acceptable levels.

Two possible solutions of the heat removal problem are available:

1. The fuel may be subdivided sufficiently to yield high surface-to-volume ratios. This effectively "dilutes" the thermal heat flux to a level at which standard heat removal processes are adequate.
2. The heat-transfer performance itself may be improved by such techniques as boundary-layer interrupters or rotating flow within tubes.

This program has been directed toward the latter of these approaches; i.e., the study of the heat transfer and fluid dynamics associated with a liquid or gas in swirl flow in a tube.

Heat Transfer. Studies on heat transfer to air[1,a] and nonboiling water[2] in vortex flow prior to the inception of this program showed that substantial improvements in heat-transfer performance were possible when the fluid was in swirl motion in tubes. This early work also suggested that vortex flow should cause a significant increase in the "burnout" heat flux associated with boiling-water heat transfer in tubes through the action of the flow-induced centrifugal field to remove vapor bubbles from the heating surface. Spiral-ramp and tangential-slot entrances were used to generate the vortex flows. For tubes of a length sufficient for practical reactor use, regeneration of the vortex at several axial positions by generators located within the tube may be necessary. Alternatively, continuous strengthening of the vortex can be accomplished by causing the fluid to enter through a slit (or a sequence of discrete orifices) extending the full length of the tube. A more feasible technique involves the insertion of a helically twisted ribbon into the tube so as to form two separate spiral paths. Work during this period has been directed toward establishing the characteristics of such twisted-tape helical-flow systems.

While the prime goal of this study was the determination of boiling-burnout fluxes (ϕ_{bo}), a great deal of data was obtained on heat transfer and friction losses under nonboiling and local boiling conditions. Copper tubes of 0.136-, 0.189-, and 0.249-in. inside diameter and aluminum tubes of 0.249-in. inside diameter were used in conjunction with tape-twist ratios ranging from 2.3 to 12.0.[b] The tapes were formed from 0.015-in.-thick Inconel ribbons;

---

[a]Superscript numbers refer to references listed at the end of this document.

[b]The tape-twist ratio, y, is defined as the distance (expressed in tube diameters) per 180-deg rotation of the tape.

tube lengths varied from 45 to 70 tube diameters (heated length/inside diameter, L_h/D_i). Tube-wall heating was effected by passing a high-amperage, low-voltage alternating electric current through the tube wall; little heat was generated in the Inconel tape because of the high electrical resistance of this path. The effect of the ripple in the wall temperature due to the a-c heating appeared minimal. Thermocouples attached to the outside tube wall at 2-in. nominal intervals provided a measure of the tube surface temperature; static-pressure taps were located in the inlet and exit electrodes. A general schematic diagram of the experimental system is given in Fig. 1.

For the nonboiling studies, the heat flux, ϕ, was varied over a tenfold range from 0.8×10^6 to 8.0×10^6 Btu/hr·ft^2; while the Reynolds modulus (calculated as if for axial flow) covered a hundredfold range from 5×10^3 to 4.3×10^5. As noted previously, the gross mechanism for vortex heat transfer probably involves the interaction of a gravitational force (centrifugally induced) and a buoyant force (acting on liquid density differences or the vapor-liquid density difference). This suggests the Froude modulus[c] (the ratio of inertial to centrifugal forces) and a grouping of the Grashof[c] and Reynolds[c] moduli, $N_{Gr}/(N_{Re,a})^2$ (the ratio of buoyant to inertial forces) as significant correlating variables. In Figs. 2 and 3 the data, as the ratio,[d]

---

[c]Froude modulus = $N_{Fr} = \frac{V_a^2}{g\,D_i}$; Grashof modulus = $N_{Gr} = \frac{D^3\,\rho^2\,g\,\beta\,\Delta t}{\mu^2}$; Reynolds modulus = $N_{Re,a} = \frac{D_i\,V_a\,\rho}{\mu}$; all in standard nomenclature and consistent units.

[d]The ratio of the mean heat-transfer coefficient for vortex flow to the mean coefficient for axial flow at the same flow and heat flux as calculated for the Colburn equation,

$$j_H = 0.023\,N_{Re}^{-0.2}\left[1 + \left(\frac{D_i}{L_h}\right)^{0.7}\right].$$

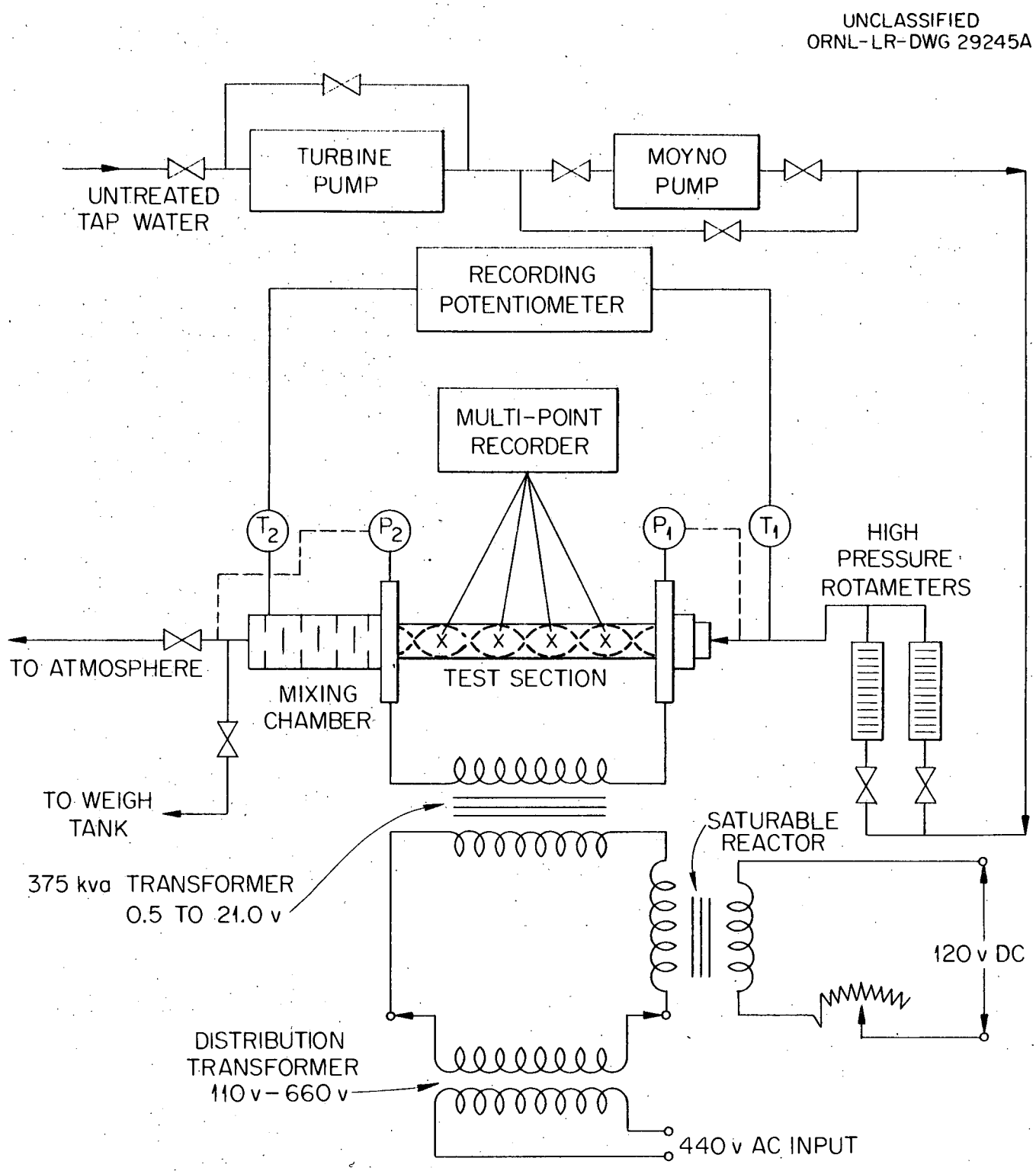

Fig. 1. Experimental Apparatus for Vortex-Flow Heat-Transfer Studies.

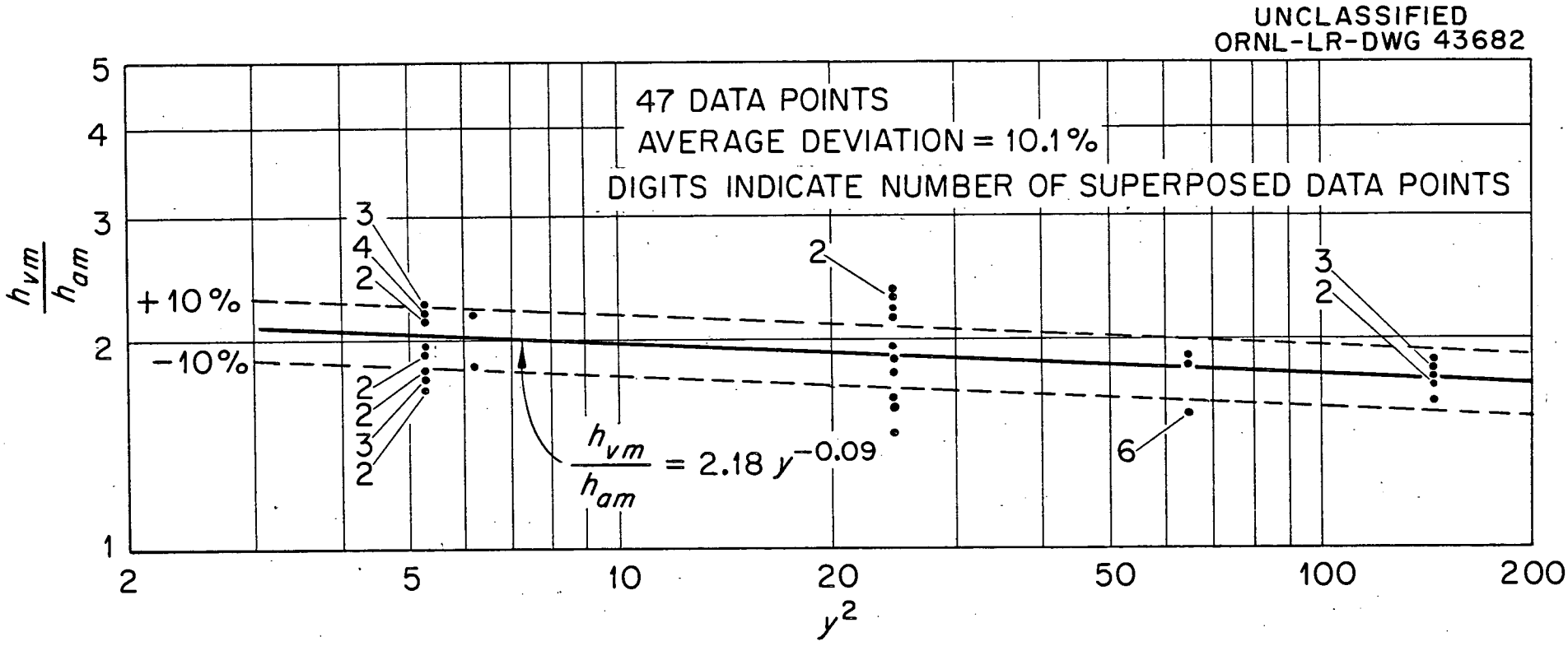

Fig. 2. Correlation of Heat-Transfer Coefficient Ratio with Froude Modulus for Nonboiling Water.

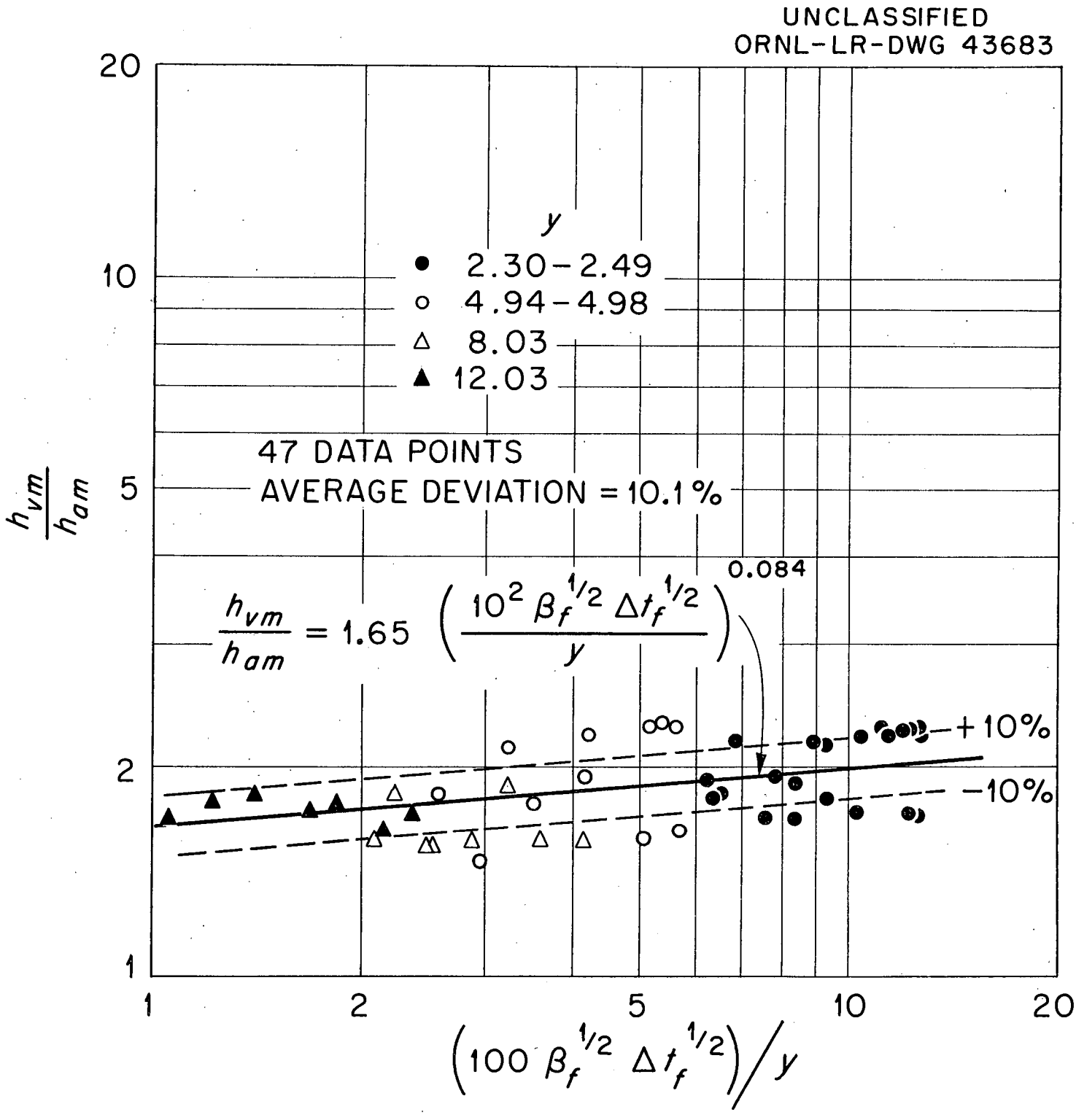

Fig. 3. Correlation of Heat-Transfer Coefficient Ratio with the Modulus Ratio $N_{Gr}/(N_{Re,a})^2$ for Nonboiling Water.

h_{vm}/h_{am}, are compared independently with these two moduli; both correlations appear successful in explaining the data. The abscissas in these figures result from combining the specific modulus (e.g., N_{Fr}) with the equivalent gravitational force at the wall.[e] The correlating equations for the 47 data points are:

$$\frac{h_{vm}}{h_{am}} = 2.18\ y^{-0.09} = 1.65\left(\frac{10^2\ \beta_f^{1/2}\ \Delta t_f^{1/2}}{y}\right)^{0.084},$$

where β_f is the volumetric coefficient of thermal expansion of the water at the film temperature and $\Delta t_f = t_i - t_b$, the over-all film-temperature difference.

The results of 13 experiments under local-boiling conditions are shown in Fig. 4. Heat fluxes ranged from 2.3×10^6 to 9.3×10^6 Btu/hr·ft^2 with exit pressure levels of 30 to 220 psia (corresponding to superheats, Δt_{sat}, of 45 to 200°F). The effect of tape-twist ratio was clearly noted, the tighter tapes supporting a higher surface flux for a given superheat. The data were satisfactorily correlated by the equation,

$$\Delta t_{sat} = 2.94\ y^{0.81}\left(\frac{\phi}{10^6}\right)^{1.35},$$

to within ±15%.

Straight-flow and swirl-flow burnout data are compared in Fig. 5 at four pumping-power values for three length-to-diameter ratios. A-nickel tubes of 0.181-in. inside diameter were used for all tests; the tape-twist ratio for the swirl-flow tubes was constant at 2.08. Exit pressure levels were maintained in the narrow range of 15 to 30 psia. For these conditions, burnout heat fluxes with vortex flow were found to be about twice those

---

[e]Using a slug-flow model, $g \propto \left(\frac{V_a}{y}\right)^2$.

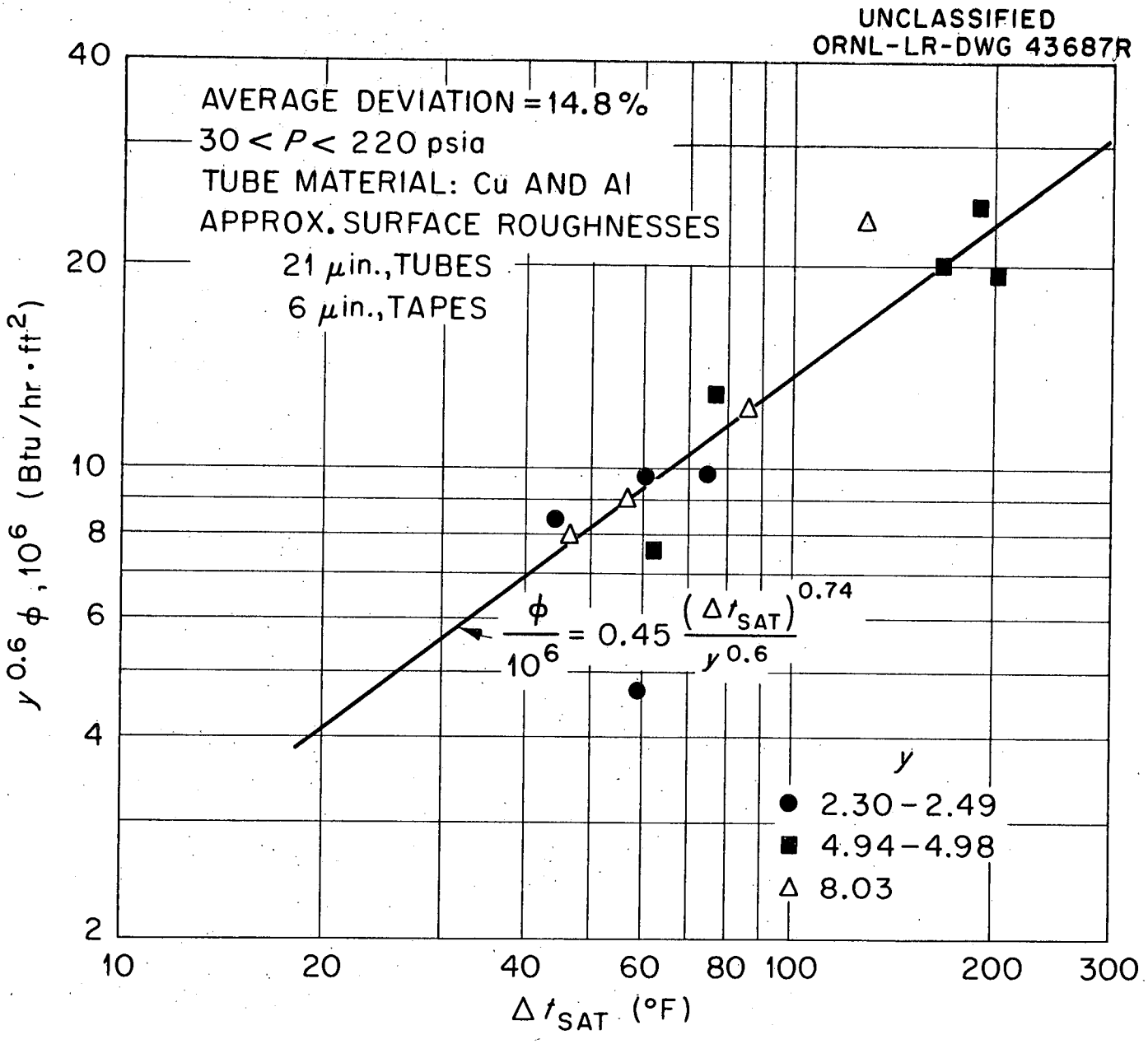

Fig. 4. Correlation of Local-Boiling Vortex-Flow Heat Transfer Data with Liquid-Film Superheat.

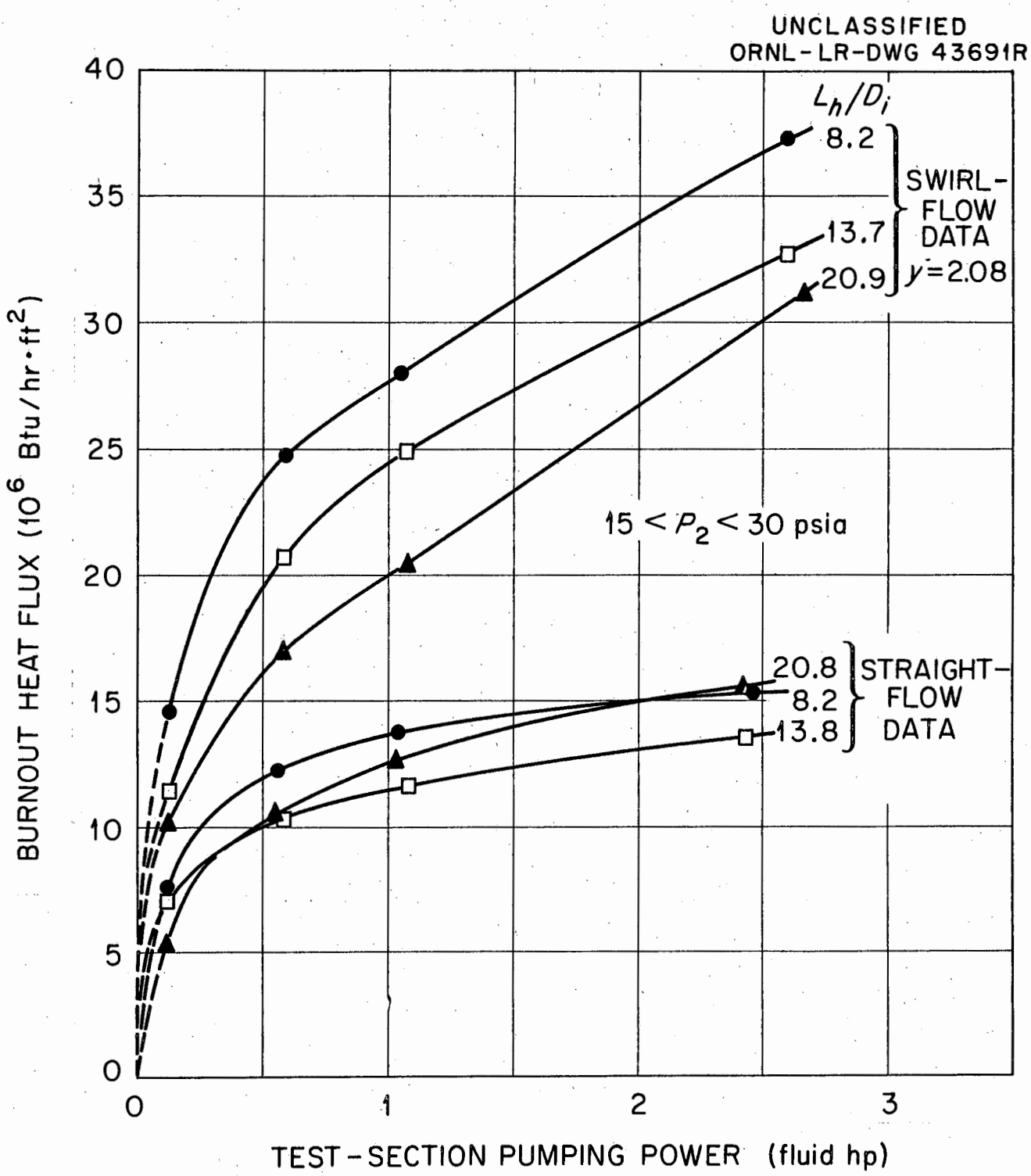

Fig. 5. Comparison of Swirl-Flow and Straight Flow Burnout Heat Fluxes in Identical Tubes at Constant Pumping Power.

attainable with straight flow ($\phi_{bo,v}/\phi_{bo,a}$ varied from 1.6 to 2.4). Maximum heat fluxes as high as 37×10^6 Btu/hr·ft^2 were measured for the twisted-tape tubes.

Analysis of the total set of vortex burnout data (40 points obtained with aluminum and copper tubes as well as with the A-nickel tubes) yielded the correlation:

$$\phi_{bo,v,min} = \frac{398\ G_r^{0.645}}{D_i^{0.2}\ (L_h/D_i)^{0.44}} ,$$

where G_r is the resultant mass velocity. While a number of other correlations were considered (all representing the data to about ±12%), this equation is recommended as a conservative-design equation. As noted in Fig. 6, over 90% of the experimental points lie above the line. The dependence of vortex burnout on L/D ratio (appearing in all correlations attempted) seems somewhat unusual in view of the lack of a good mechanistic explanation. A similar effect has been observed with axial bulk boiling, where the nature of the two-phase flow region in the presence of net vapor generation can vary markedly with heated length, and with axial subcooled boiling; for the latter condition, the L/D issue is still somewhat controversial.

Pressure drops in vortex flow were determined in a series of tests using both aluminum and copper tubes of dimensions identical to those for the heat-transfer studies; ribbon-twist ratios varied from 2.3 to 8.0. Static-pressure taps were formed by drilling small holes through the electrodes and into the tubes so as to eliminate end losses from the measurements. A total of 149 experimental runs were made, of which 88 were for isothermal conditions, 47 for heated nonboiling, and 14 for heated local boiling. The resulting friction factors, evaluated from the standard equation for turbulent flow in ducts,

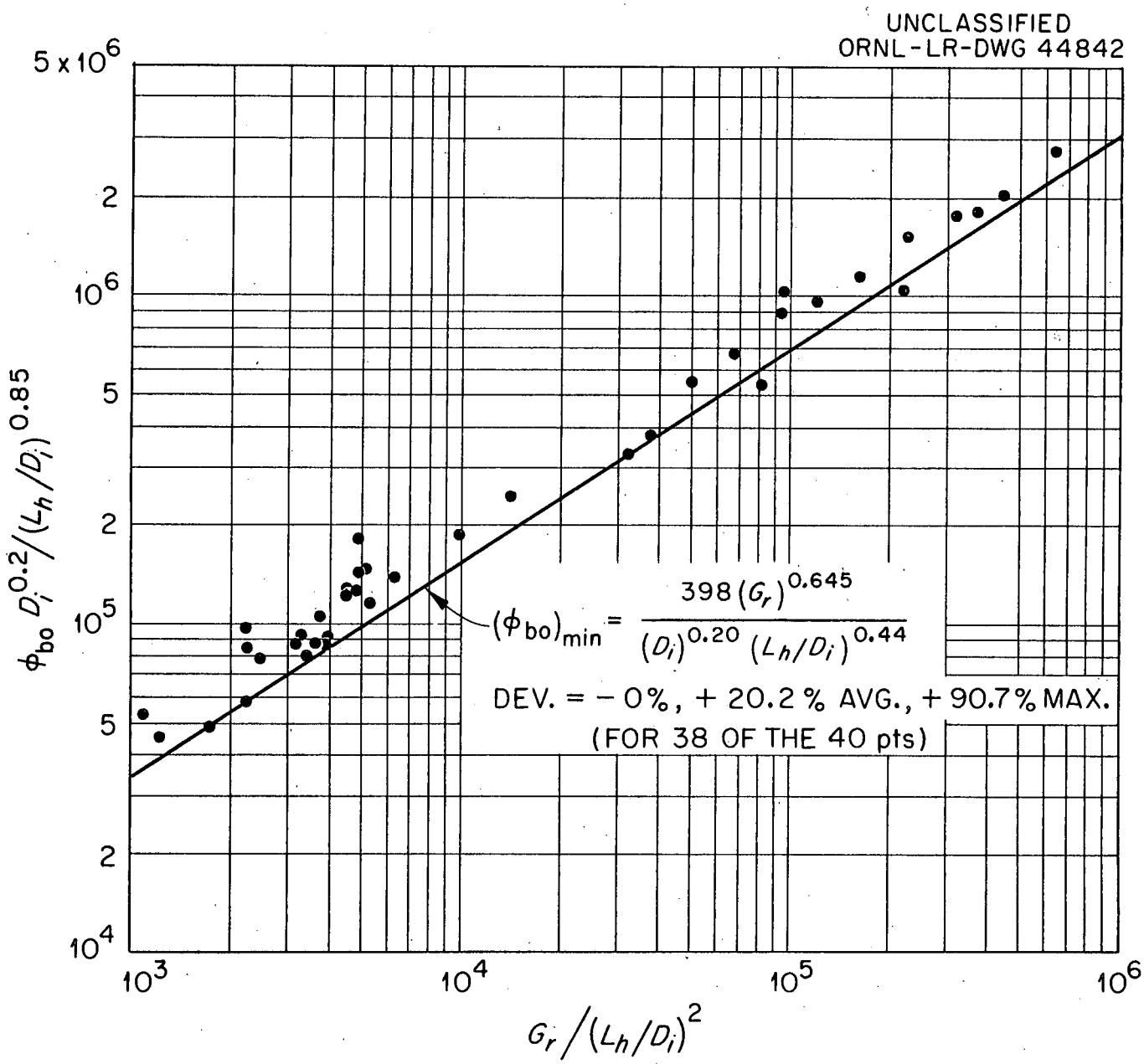

Fig. 6. Twisted-Tape Vortex-Burnout Correlation.

$$f_a = \frac{D_i}{L_a} \frac{2\, g_c}{\rho\, V_a^{\,2}} \Delta P \quad ,$$

are considerably higher (by as much as a factor of 3) than those found for axial flow in smooth pipes. Replacing D_i, L_a, and V_a by the equivalent diameter (D_e), the actual helical flow-path length ($L_{r,i}$) measured at the inside wall, and the resultant fluid velocity at the wall ($V_{r,i}$) improves the correlation to the extent that the axial-flow smooth-tube friction-factor curves represent the vortex-flow data to within ±20%. In Fig. 7 the tape-twist ratio has been incorporated along with a nonisothermal correction and an empirical dependency on D_i to define an equivalent friction factor for vortex flow under both isothermal and heated nonboiling conditions. It is found that

$$f_e = 0.00089 \pm 12\%$$

over the full experimental range of the Reynolds modulus. Thus the equation,

$$\Delta P = 0.00089 \frac{V_a^{\,2}}{2\, g_c} \frac{L_a}{D_i} \frac{\rho_b}{(D_i^{\,2}\, y)^{0.6}} \left(\frac{\mu_i}{\mu_b}\right)^{0.18}$$

is suggested for design purposes. Since the pressure loss with swirl flow appears sensitive to surface roughness, this equation should not be used for extrapolations beyond the physical conditions employed in this investigation. The average surface roughness for these tests was of the order of 21 μin.

The work described above will appear in greater detail in an ORNL topical report[3] scheduled for publication during the last quarter of this fiscal year. A condensed version of this report has been submitted for presentation at the Fourth National Heat Transfer Conference.

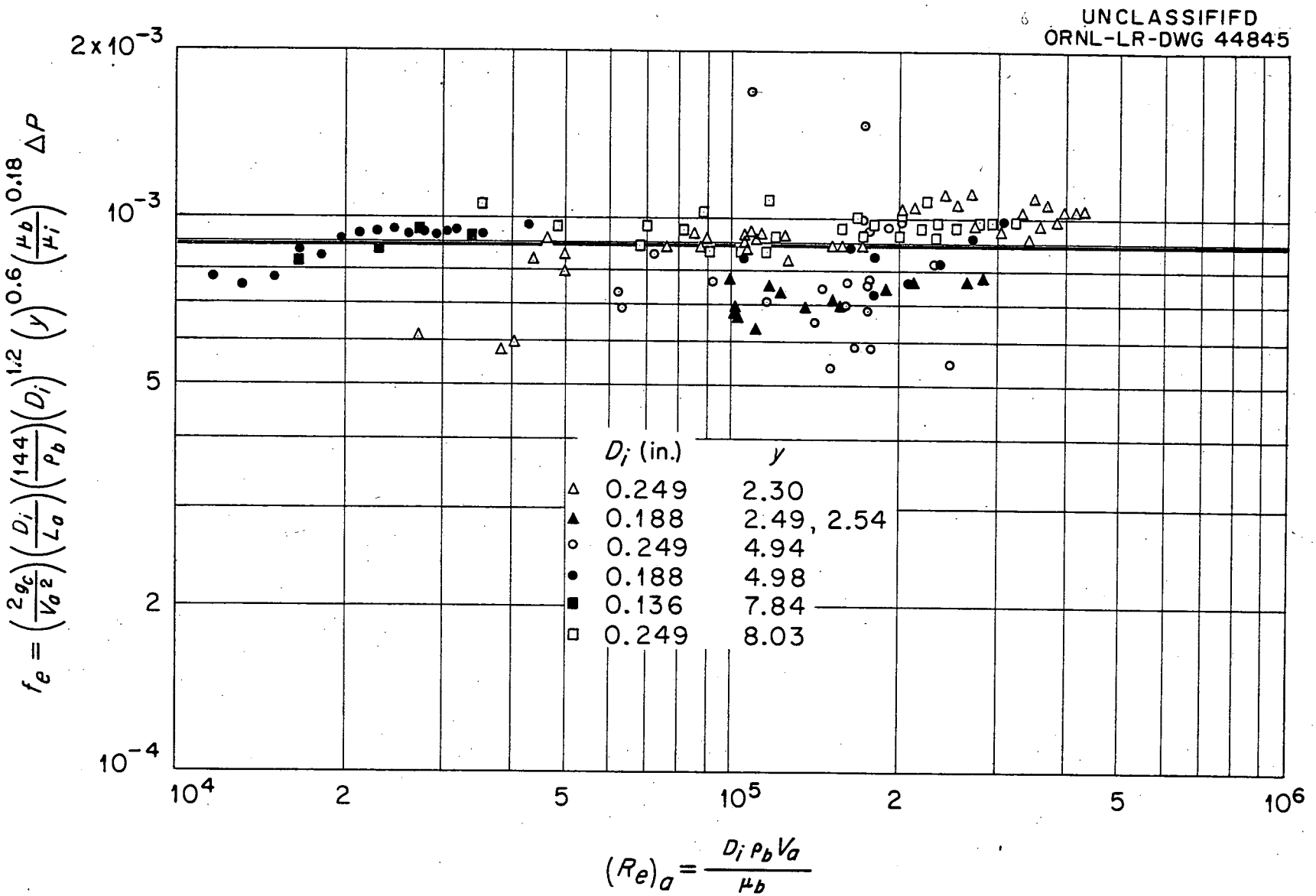

Fig. 7. Vortex-Flow Friction Factors.

Fluid Dynamics. In considering the use of a vortex flow for heat transfer or for gas separation, a knowledge of the interrelationship of the vortex strength and the turbulent energy dissipation is of fundamental importance. For example, while turbulence in the flow field is helpful in promoting heat transfer, it may at the same time lead to prohibitive pumping-energy requirements. Therefore this study is aimed at determining systematically the effects of certain key variables (such as injection velocity, mass flow rate, pressure, and tube geometry) on the vortex strength and the velocity profile in a jet-driven vortex tube under conditions approximating a two-dimensional flow field. The vortex strength is defined as the tangential peripheral velocity.

The experimental apparatus involved is typified by that shown in Figs. 8 and 9. Twelve feed nozzles were located in an interrupted spiral along the tube with a 1-in. axial spacing and 90-deg rotation between adjacent nozzles. In this modification, the tube was formed by drilling a 2-in.-dia hole of 12-in. length into a 4-in. square Plexiglas block. The gas jets (helium or nitrogen) entered at a radius of 0.92 in.; the inside surface of the tube was polished after the nozzles were honed to the tube contour. The exhaust port, containing an adjustable annular nozzle, was located at the center of one end of the tube; the opposite end was closed and was provided with a spiral arrangement of pressure taps for establishing the radial static-pressure distribution. The tangential velocity variation was then calculated from the pressure distribution. Gas pressures at the inside tube wall were of the order of 150 psig. Table 1 describes the experimental tubes studied.

The pertinent variables can be combined to give a set of dimensionless groups which are significant in correlating the tangential velocity data. These are: (1) the jet Mach number, M_j; (2) the radial Reynolds modulus, $N_{Re,r}$,

Unclassified
ORNL-LR-DWG 32566

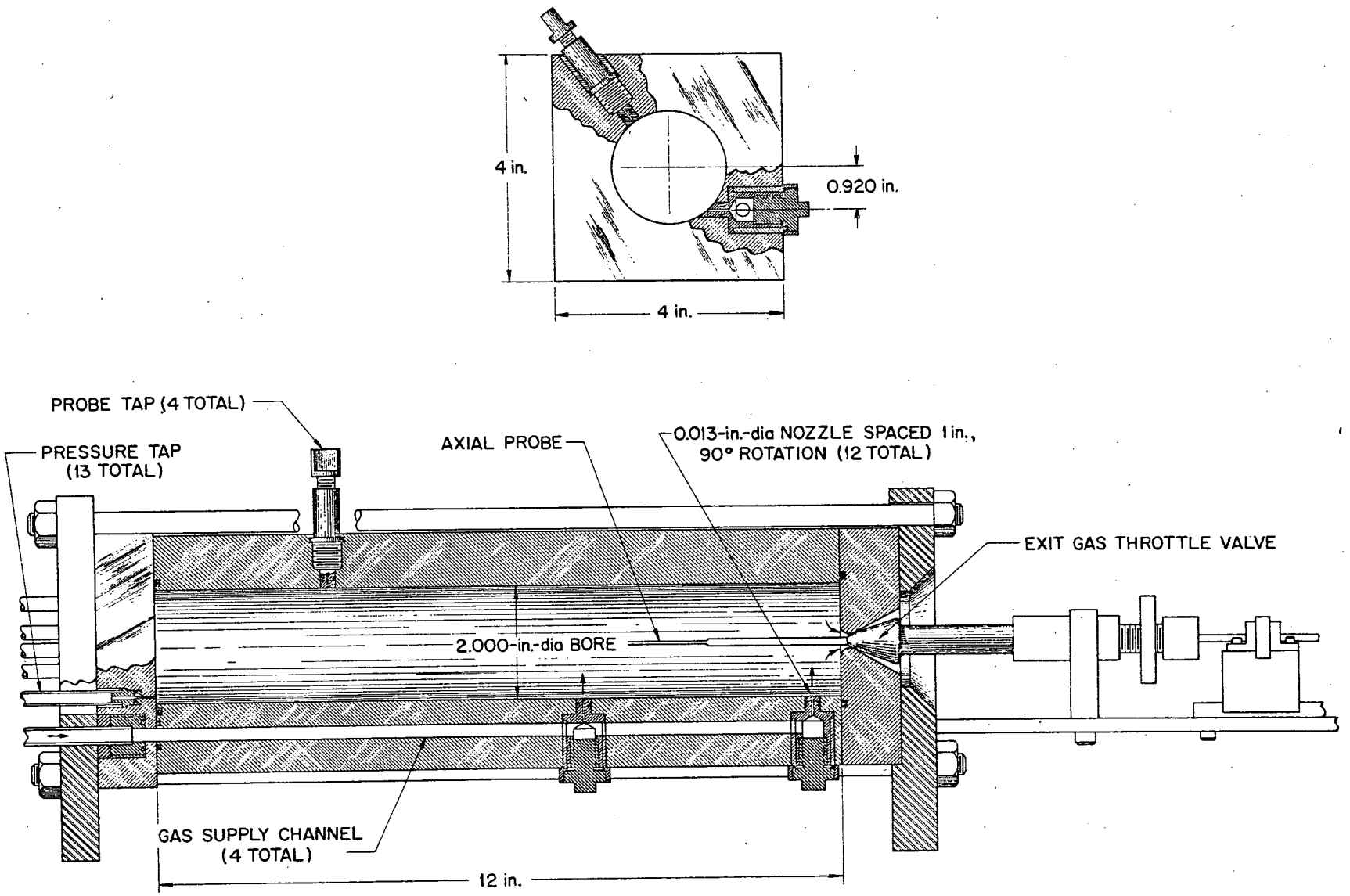

Figure 8. Experimental Vortex Tube

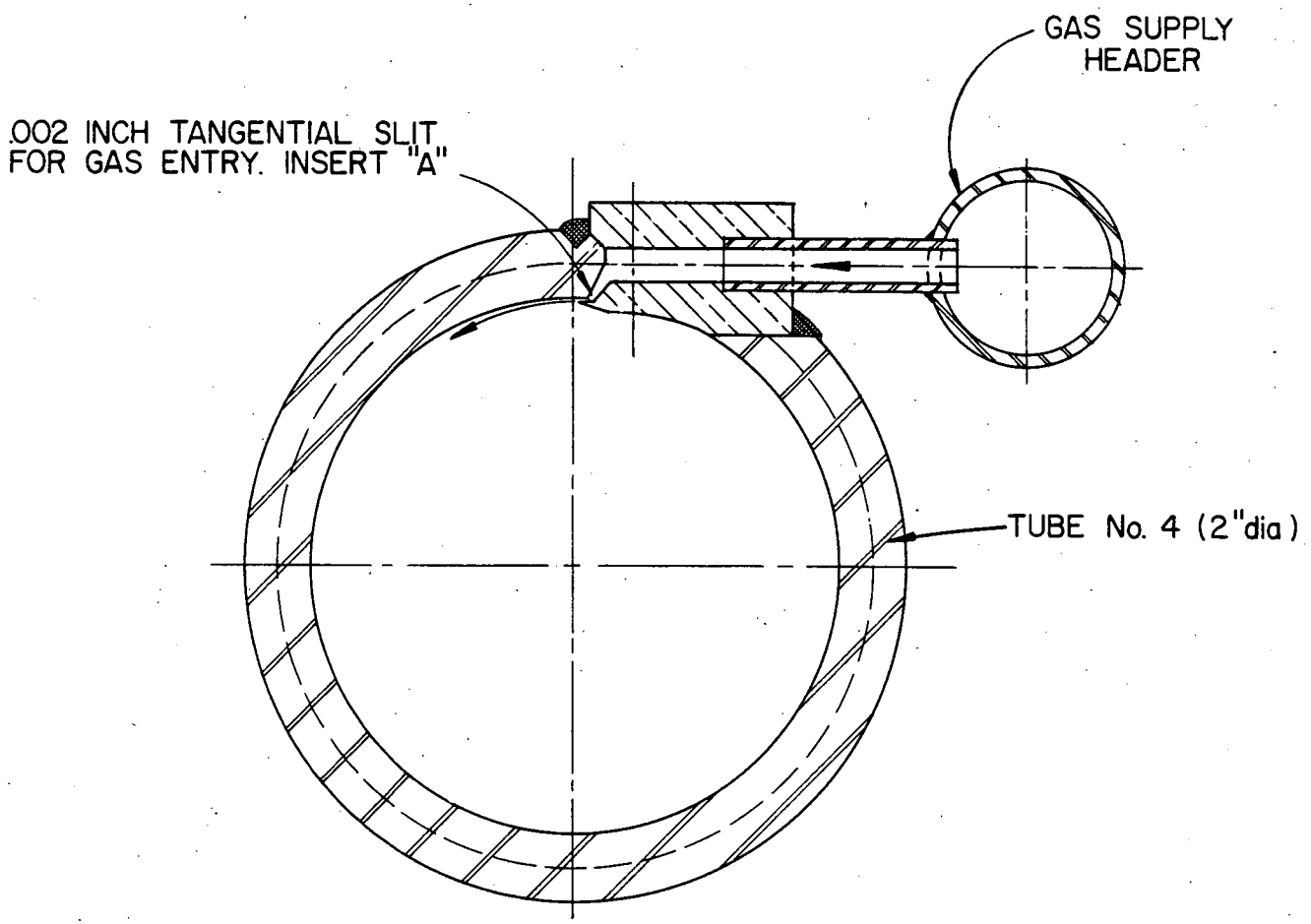

Fig. 9. Slit-Fed Vortex Tubes 4A and 4B.

Table 1. Description of Experimental Vortex Tubes

Tube No.	Tube ID, 2 r_p (in.)	Tube Length (in.)	Injection Geometry: Description	Injection Geometry: Dia or Width (in.)	Injection Geometry: Radial Position r_a'	Exit Radius / Tube Radius r_e'
1	2.00	12.0	12 Nozzles	0.0135	0.92	0.140
2	2.00	12.0	12 Nozzles	0.0100	0.84	0.140
3	2.00	12.0	12 Nozzles	0.0135, 0.0330	0.92	0.0625 – 0.250
3A	1.00	12.0	12 – 164 Nozzles	0.020	0.90	0.280 – 0.500
3B	0.63	3.25, 6.0, 12.0	11 – 54 Nozzles	0.020	0.90, 0.95	0.380 – 0.525
4A	2.00	12.0	12-in.-long Slit	0.002	1.00	0.140
4B	2.00	12.0	"	0.002	0.92	0.140
5	0.64	3.5	12 Nozzles	0.028	0.88	0.308 – 0.362
6	0.315	1.75	60 Nozzles	0.0135	0.90	0.3 – 0.5

which is based on the radial mass flow at any radius and by virtue of the inlet and exit geometry is a constant for a specific test; (3) the tangential Reynolds modulus, $N_{Re,t}$, which is based on the tangential velocity at the wall and the tube diameter; (4) a corresponding tangential Mach number at the wall, M_p; and (5) the tube length-to-diameter ratio, L/D.

Presentation of the data (see Fig. 10) as a jet effectiveness ratio, M_p/M_j, shows subsonic injection to be more effective in generating vorticity than is supersonic injection at the same jet input power and tube wall pressure. More recent data with a 0.315-in.-ID tube indicate a value of 0.65 for M_p/M_j at $M_j = 0.52$. Further, for the same conditions of constant jet input power and pressure, the effect of tube diameter is found to be quite pronounced. Thus, as seen from Fig. 11, decreasing the tube diameter from 2.0 in. to 0.315 in. results in an increase in M_p from 0.20 to 0.45. The degree of approach to potential vortex flow ($V_t \sim 1/r$) appears to be influenced primarily by the ratio of the radial to tangential Reynolds modulus; the higher the ratio $N_{Re,r}/N_{Re,t}$, the more closely the flow field approached that of a potential vortex. Variation in L/D produced negligible change in the vortex strength for $L/D > 3$. At lower values of L/D, however, both the vortex strength and the slope of the velocity profile were observed to decrease. This may be due to the increased role of end effects at the small length-to-diameter ratios.

A measure of the degree of turbulence at the tube wall can be obtained by using the velocity-profile data to estimate a virtual[f] viscosity for the fluid. The data of 68 runs were analyzed; results are presented in Fig. 12 for the ratio of the virtual to molecular viscosity as a function of the

---

[f]The virtual viscosity, μ^*, is the total viscosity combining both molecular and eddy contributions.

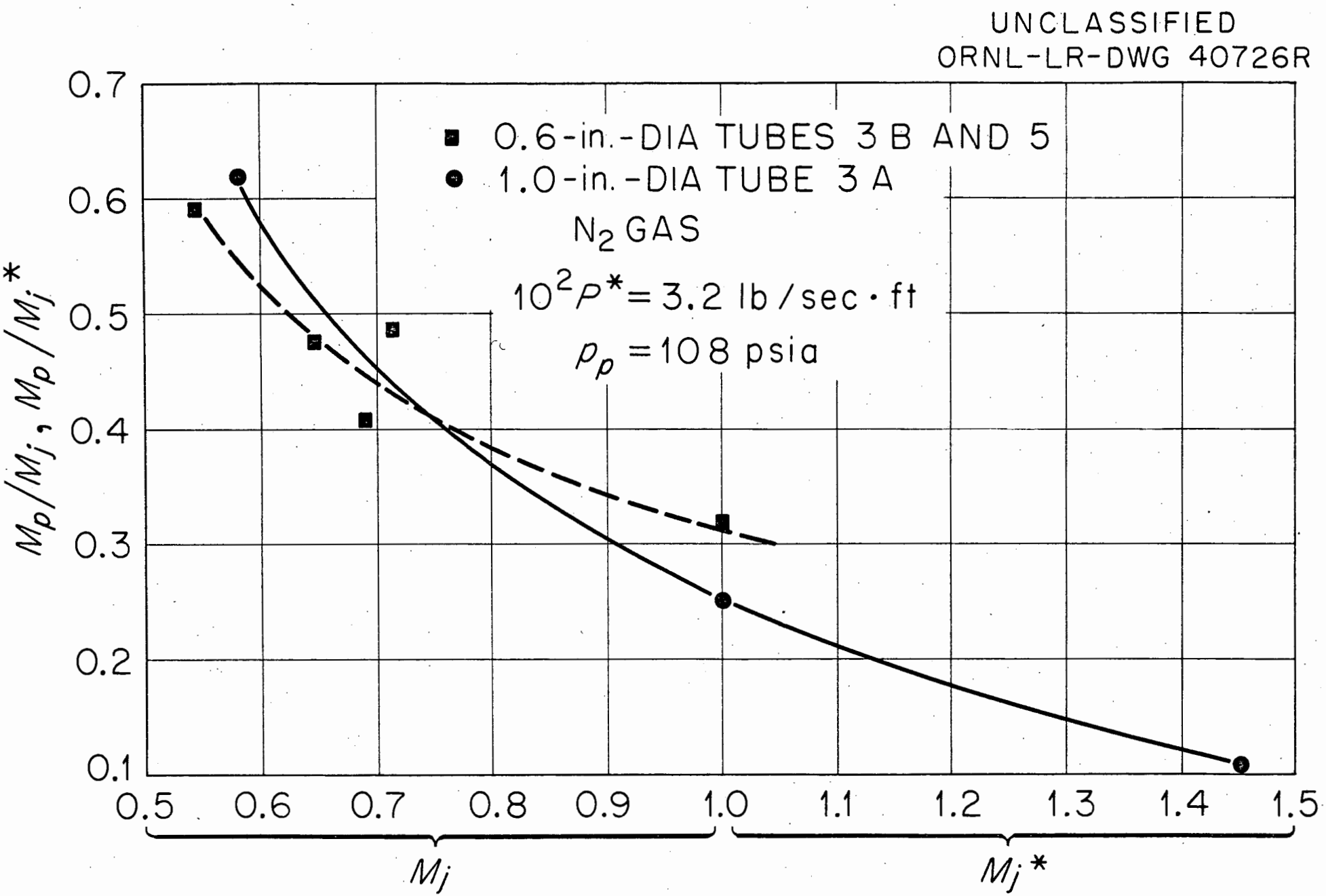

Fig. 10. Variation of Ratio of Tangential to Jet Mach Number with Jet Mach Number.

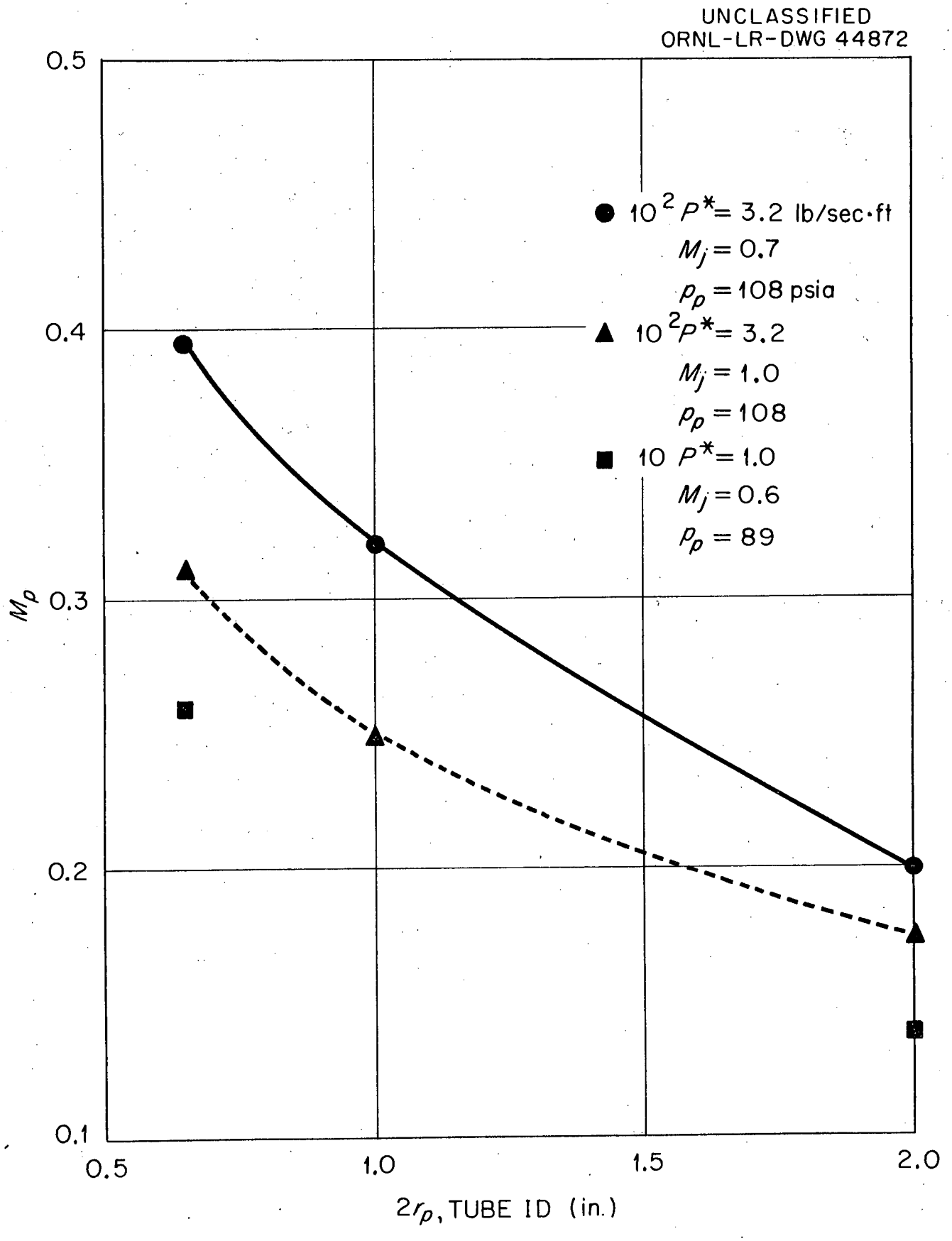

Fig. 11. Dependence of Peripheral Mach Number on Tube Diameter.

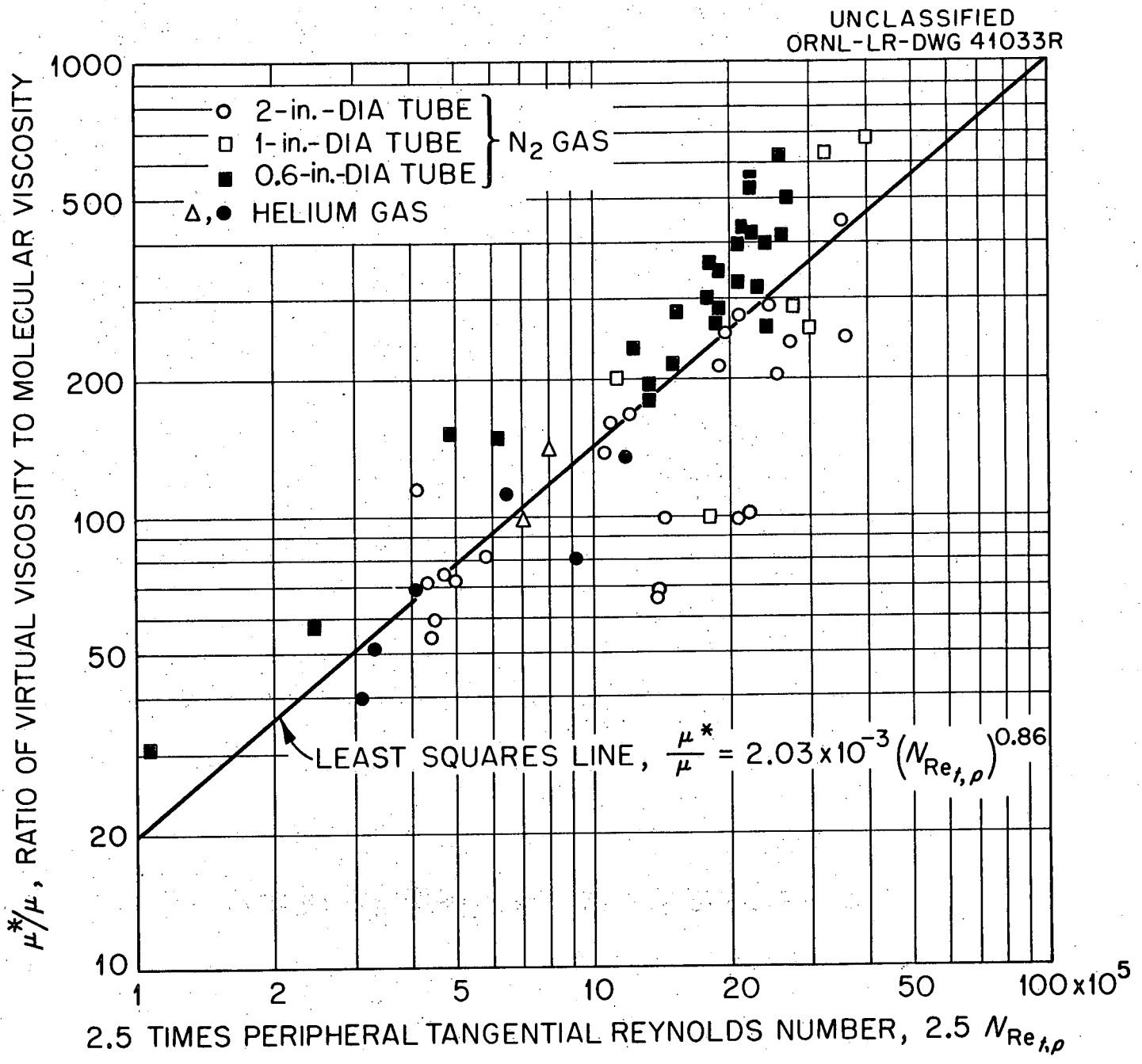

Fig. 12. Variation of Ratio of Virtual Viscosity to Molecular Viscosity with Peripheral Tangential Modulus. Tube dia: 0.6, 1.0, and 2.0 in.; N_2 and H_2 gas.

peripheral tangential Reynolds modulus. Despite the wide range of the experimental variables,[g] the data are well correlated by the equation,

$$\mu^*/\mu = 2.03 \times 10^{-3} (N_{Re,t})^{0.86} ,$$

for the Reynolds modulus range of 4×10^4 to 1.6×10^6. The lowest value of μ^*/μ observed was 30 at a tangential Reynolds modulus of 4.0×10^4 for a wall pressure of 2.5 psia. It is concluded that flow near the wall in jet-driven vortex tubes will in all probability be turbulent for pressures in excess of a few tenths psia. On this basis, it seems that high-pressure operation is desirable for heat transfer, whereas for processes such as gas separation where turbulent mixing strongly affects the separation very low pressures are to be preferred.

The work described above partially summarizes a paper to be given at the 1960 Fluid Mechanics and Heat Transfer Institute and to be published in the official journal of that organization. An ORNL topical report[10] covering this program, and associated aspects, is in preparation.

Transient Heat Transfer

It has been demonstrated through studies[4,5] made during the past few years at ORNL that transient stresses induced in a solid by thermal fluctuations in a fluid flowing along the solid surface can cause a fatigue-type failure and/or accelerated corrosion in the solid. The extent of such failure was found to depend on such factors as the amplitude of the temperature

---

[g]Tube diameters of 0.315, 0.640, 1.00, and 2.00 in.; helium and nitrogen gas; mass flow rates from 0.012 to 0.13 lb/sec-(ft of tube length); M_j from 0.2 to 1.0; tube wall pressures from 2.5 to 120 psia; and effective jet input powers of 0.2×10^{-2} to 5.0×10^{-2} lb/sec·ft.

oscillation, the frequency spectrum, the length of exposure, and the relative properties of the fluid and solid. Moderately high-frequency transients (1 to 10 cycles/sec) are inherent in most reactors; and since they are generated essentially continuously during the reactor operating lifetime, a sufficient number of cycles can be accumulated to produce surface cracking even at low amplitudes.

The origin of these thermal transients is in the coolant flow itself. Thus, even in as good a geometry as a tubular fuel element internally cooled, turbulent eddies penetrate[6] the laminar sublayer adjacent to the bounding surface and cause rapid fluctuations in the local rate of heat removal. In entrance regions, diverging channels, or downstream of obstructions, transients of large amplitude can be expected. For circulating-fuel reactors, the situation is further intensified by the possibility of adverse temperature profiles in the flowing fuel coolant. The relative thermal properties of the coolant and wall appears to be a significant factor; the combination of a good thermally conducting fluid in contact with a low-conductivity wall is especially likely to result in large surface-temperature oscillations. In many instances these thermal oscillations persist beyond the confines of the core and can cause damage in connecting lines and external heat exchangers.

In that the mechanism of thermal-transient generation arises from the effects of turbulence near a wall, an understanding of the nature of turbulent instabilities in boundary layers is needed. Very little is known quantitatively, for example, about the behavior of the laminar sublayer very close to the wall of a channel. It is suspected, with some experimental justification, that the sublayer is itself intermittent, breaking up periodically into turbulent eddies or being at least thinned for a sufficient length of time to

permit eddies from the buffer zone or the mainstream to penetrate nearly to the wall. This investigation will attempt to answer, through the quantitative study of turbulent velocity and temperature profiles at a solid boundary, some of the questions concerning thermal instabilities as they relate to conditions and geometries of interest in reactor design.

A steam-heated test section[7,8] will be used to study wall-temperature transients, and corresponding fluctuations in local heat-transfer rates, for both laminar and turbulent flow of water through straight tubes of varying length-to-diameter ratios. The effects of upstream bends and flow restrictions will also be determined. The experimental techniques for obtaining instantaneous surface and fluid temperatures[9] have been developed at ORNL and will be utilized in these measurements. Previous experiments,[7,8] however, indicate that additional work is needed in achieving a stable gross flow. Improved instrumentation for analyzing the complex electrical signals generated by the thermocouples so as to increase the precision of the data is also required.

Concurrently, the mechanism of turbulent eddy penetration of the laminar sublayer will be investigated in simple geometries with fully developed flow patterns. Extensive use will be made of advanced experimental techniques such as hot-film anemometers, magneto-hydrodynamic probes, and ceramic pressure crystals.

REFERENCES

1. W. R. Gambill and N. D. Greene, A Preliminary Investigation of Air Film Heat-Transfer Coefficients for Free- and Forced-Vortex Flow within Tubes, ORNL CF-58-5-67 (May 23, 1958).

2. Unpublished data of W. R. Gambill and N. D. Greene.

3. W. R. Gambill, R. D. Bundy, and R. W. Wansbrough, Heat Transfer, Burnout and Pressure Drop for Water in Swirl Flow Through Tubes with Internal Twisted Tapes, ORNL-2911 (Mar. 28, 1960).

4. J. J. Keyes, Jr., and A. I. Krakoviak, "High-Frequency Thermal Fatigue Cycling of Inconel at 1400°F," Trans. Am. Nuc. Soc. 2, No. 1, p 22 (June 1959).

5. H. W. Hoffman and D. P. Gregory, An Experimental Study into the Effects of Surface Thermal Cycling on Inconel in a Molten Salt Environment, ORNL-2435 (to be issued).

6. R. Higbie, Trans. Am. Inst. Chem. Eng. 31, 65 (1935).

7. R. A. Suehrstedt, P. L. Durrill, D. W. Jeffrey, and A. J. Ziegenhagen, Application of Concepts of Penetration Theory to Heat Transfer, MIT Eng. Practice School Report KT-378 (Dec. 1, 1958).

8. A. E. Higinbotham, T. J. Delaney, J. E. Donahue, and M. J. Friedman, Study of Unsteady Heat Transfer Between a Surface and a Flowing Fluid, MIT Eng. Practice School Report KT-397 (May 11, 1959).

9. J. J. Keyes, Jr., and J. E. Mott, An Investigation of Thermal-Transient Decay at a Fluid-Solid Interface and in Turbulent Flow Through Circular Ducts, ORNL-2603 (Dec. 2, 1958).

10. J. J. Keyes, Jr., and R. E. Dial, An Experimental Study of Vortex Flow for Application to Gas-Phase Fission Heating, ORNL-2837 (Apr. 10, 1960).

INTERNAL DISTRIBUTION

1. L. B. Alexander
2. R. B. Briggs
3. R. D. Bundy
4. C. E. Center (K-25)
5. R. A. Charpie
6. H. C. Claiborne
7. A. P. Fraas
8. W. R. Gambill
9-13. H. W. Hoffman
14. J. J. Keyes, Jr.
15. G. J. Kidd, Jr.
16. C. G. Lawson
17. R. N. Lyon
18. H. G. MacPherson
19. A. J. Miller
20. F. N. Peebles
21. M. W. Rosenthal
22. G. Samuels
23. I. Spiewak
24. J. A. Swartout
25. A. M. Weinberg
26. C. E. Winters
27-28. Central Research Library
29-34. Laboratory Records Department
35. Laboratory Records, ORNL-RC
36-38. ORNL Y-12 Technical Library Document Reference Section
39. Reactor Division Library, Bldg. 9204-1, Y-12

EXTERNAL DISTRIBUTION

40-54. TISE AEC
55. Alco Products, Inc., P. O. Box 414, Schenectady, New York, Attn.: D. T. Savage
56. Atomics International, P. O. Box 309, Canoga Park, California, Attn.: Library
57. Dr. R. B. Beckman, Carnegie Institute of Technology, Schenley Park, Pittsburgh 13, Pennsylvania
58. H. W. Behrman (AEC-OROO)
59. Dr. C. F. Bonilla, Columbia University, Department of Chemical Engineering, New York 27, New York
60. Bettis Plant, U. S. Atomic Energy Commission, Bettis Field, P. O. Box 1468, Pittsburgh 30, Pennsylvania, Attn.: Mrs. V. Sternberg
61. Combustion Engineering, Inc., Nuclear Division, Windsor, Connecticut, Attn.: Document Custodian
62. D. F. Cope (AEC-OROO)
63. Department of Navy, Office of Naval Research, Code 422, Washington 25, D. C.
64. E. I. duPont de Nemours and Company, Savannah River Laboratory, Technical Information Service-773A, Aiken, South Carolina
65. Dr. O. E. Dwyer, Brookhaven National Laboratory, Associated Universities, Inc., Upton, L. I., New York
66. Dr. E. R. G. Eckert, University of Minnesota, Institute of Technology, Minneapolis 14, Minnesota
67. Dr. J. K. Ferrell, Babcock & Wilcox Company, Atomic Energy Division, 1201 Kemper Street, Lynchburg, Virginia
68. Dr. K. Forster, Department of Engineering, Institute of Industrial Co-operation, University of California, Los Angeles, California

69. General Electric Company, P. O. Box 100, Richland, Washington, Attn.: M. F. McHale
70. General Electric Company, Atomic Power Equipment Division, San Jose, California, Attn.: Technical Library
71. General Nuclear Engineering Corporation, P. O. Box 245, Dunedin, Florida, Attn.: W. P. Bigler
72. L. L. Kintner, Allis-Chalmers Manufacturing Company, 508 Kennedy Street, N. W., Washington 11, D. C.
73. Knolls Atomic Power Laboratory, P. O. Box 1072, Schenectady, New York, Attn.: Document Librarian
74. Dr. A. L. London, Department of Mechanical Engineering, Stanford University, Stanford, California
75. Dr. Paul Lottes, Argonne National Laboratory, 9700 South Cass Avenue, Argonne, Illinois
76. Dr. M. Markels, Jr., Supervisor, Nuclear Engineering Projects, Atlantic Research Corporation, Shirley Highway & Edsal Road, Alexandria, Virginia
77. Martin Company, P. O. Box 5042, Baltimore 20, Maryland, Attn.: AEC Document Library

78-87. S. G. Nordlinger, Chief, Reactor Component Development Branch, Division of Reactor Development, U. S. Atomic Energy Commission, Washington 25, D. C.

88. Nuclear Development Corporation of America, 5 New Street, White Plains, New York, Attn.: Library
89. Phillips Petroleum Company, NRTS Technical Library, P. O. Box 2067, Idaho Falls, Idaho
90. Dr. R. P. Stein, Director, Engineering Research Laboratories, Columbia University, 632 West 125th Street, New York 27, New York
91. Dr. Leonard Topper, Division of Research and Development, U. S. Atomic Energy Commission, New York Operations Office, 376 Hudson Street, New York 14, New York
92. Westinghouse Electric Corporation, Atomic Power Department, P. O. Box 355, Pittsburgh 30, Pennsylvania, Attn.: Mr. E. Schafer

X-847

INTRA-LABORATORY CORRESPONDENCE

OAK RIDGE NATIONAL LABORATORY

November 3, 1960

Mr. C. E. Winters
Bldg. 4500

to L. R. 11-11-60

Report No.: CF 60-10-6 Copy: 26 Classification: Unclassified

Author(s): H. W. Hoffman, W. R. Gambill, J. J. Keyes, G. J. Kidd, Jr.

Subject: Fundamental Studies in Heat Transfer and Fluid Mechanics, Status Report July 1, 1959 - Feb. 29, 1960

Request compliance with indicated action:

Please substitute the attached page 18, ORNL-LR-Dwg. 32566, for the page 18 now in your copy of the subject memorandum.

N. T. Bray

N. T. Bray, Supervisor
Laboratory Records Department
Technical Information Division

NTB:WCB:jlb

ORNL:RC

Unclassified
ORNL-LR-DWG 32566

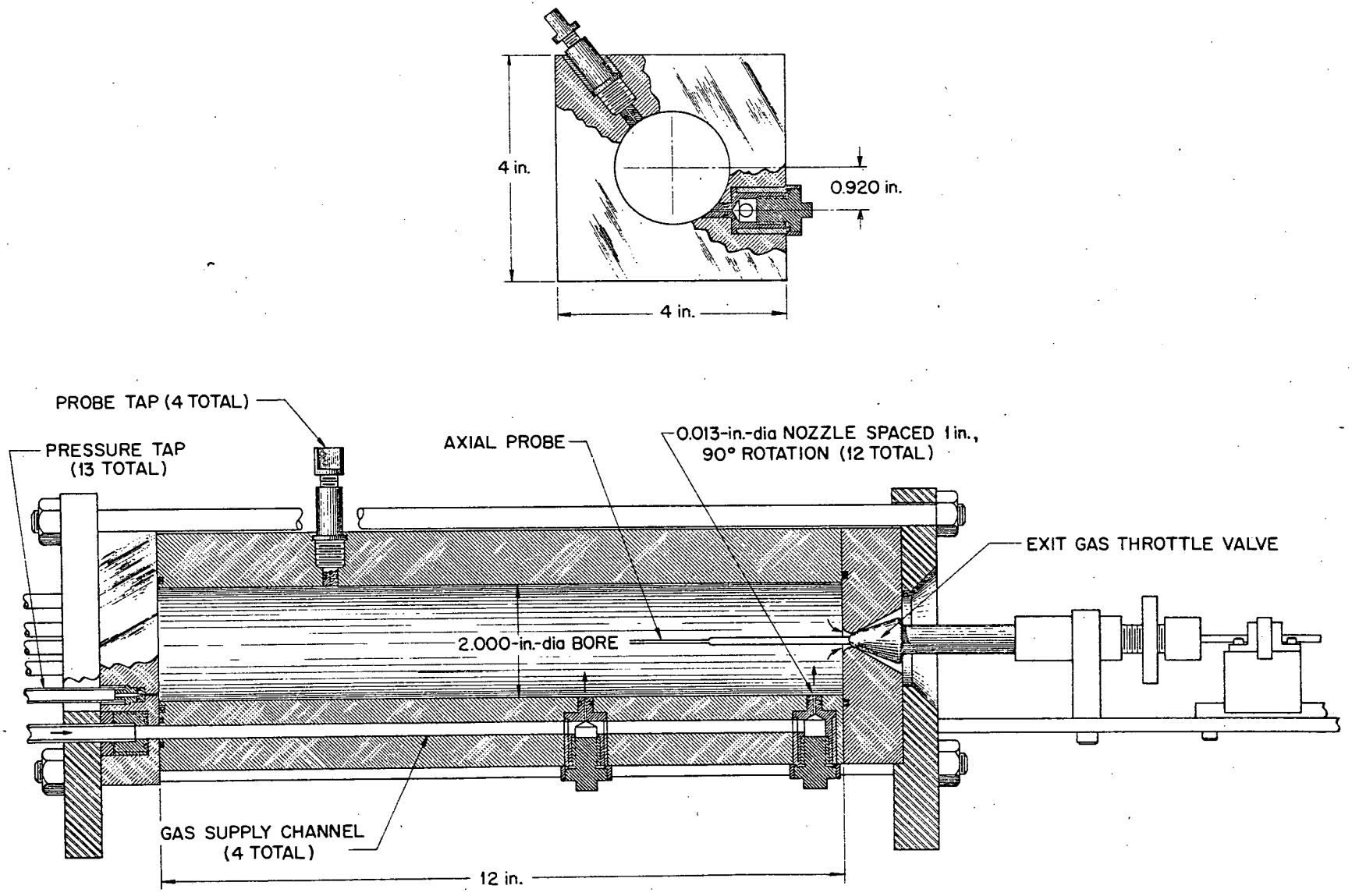

Figure 8. Experimental Vortex Tube