X-822

ORNL
MASTER COPY

OAK RIDGE NATIONAL LABORATORY
Operated by
UNION CARBIDE NUCLEAR COMPANY
Division of Union Carbide Corporation
UCC
Post Office Box X
Oak Ridge, Tennessee

External Transmittal
Authorized

ORNL
CENTRAL FILES NUMBER
60-3-164

COPY NO. 53

DATE: March 17, 1960

SUBJECT: Development Testing and Performance Evaluation of Liquid Metal and Molten Salt Heat Exchangers

TO: Listed Distribution

FROM: R. E. MacPherson and M. M. Yarosh

Abstract

This memo contains two companion papers presented at the 1959 Winter Meeting of the American Nuclear Society in Washington, D. C. The papers cover work performed on development testing and performance evaluation of liquid metal and molten salt heat exchangers in support of the Aircraft Nuclear Propulsion program at the Oak Ridge National Laboratory.

NOTICE

This document contains information of a preliminary nature and was prepared primarily for internal use at the Oak Ridge National Laboratory. It is subject to revision or correction and therefore does not represent a final report. The information is not to be abstracted, reprinted or otherwise given public dissemination without the approval of the ORNL patent branch, Legal and Information Control Department.

LEGAL NOTICE

This report was prepared as an account of Government sponsored work. Neither the United States, nor the Commission, nor any person acting on behalf of the Commission:

A. Makes any warranty or representation, expressed or implied, with respect to the accuracy, completeness, or usefulness of the information contained in this report, or that the use of any information, apparatus, method, or process disclosed in this report may not infringe privately owned rights; or

B. Assumes any liabilities with respect to the use of, or for damages resulting from the use of any information, apparatus, method, or process disclosed in this report.

As used in the above, "person acting on behalf of the Commission" includes any employee or contractor of the Commission, or employee of such contractor, to the extent that such employee or contractor of the Commission, or employee of such contractor prepares, disseminates, or provides access to, any information pursuant to his employment or contract with the Commission, or his employment with such contractor.

DEVELOPMENT TESTING OF LIQUID METAL AND MOLTEN SALT HEAT EXCHANGERS

R. E. MacPherson, J. C. Amos, H. W. Savage
Reactor Projects Division
Oak Ridge National Laboratory

List of Figures

Fig. 1 0.5 Megawatt Heat Exchanger

Fig. 2 1.5 Megawatt Heat Exchanger

Fig. 3 0.5 Megawatt Radiator

Fig. 4 1.75 Megawatt Radiator

Fig. 5 0.5 Megawatt Heat Exchanger Test Stand

Fig. 6 1.5 Megawatt Heat Exchanger Test Stand

Fig. 7 Direct Electrical Resistance Heater

Fig. 8 1 Megawatt Gas-Fired NaK Heater

Fig. 9 NaK Purification System

Fig. 10 Plug Indicator

Fig. 11 Results of Severe Thermal Cycling

Fig. 12 Tube Wall Failure - Heat Exchanger

Fig. 13 Tube Plugging Failure - Radiator

Abstract

In support of the ANP program at the Oak Ridge National Laboratory, extensive development testing was done on prototype, bifluid (molten salt-NaK) heat exchangers and on liquid metal (NaK-air) radiators. Five bifluid systems and one liquid metal system were used for performance and endurance tests under simulated reactor operating conditions. The molten salt was a sodium-zirconium-uranium fluoride mixture of composition NaF - 50 mol %, ZrF_4 - 46 mol %, UF_4 - 4 mol %. The NaK used was 56 wt. % sodium and 44 wt. % potassium. A total of 47,000 hours of operation at 1200 - 1700°F was accumulated on 18 heat exchangers and 20 radiators.

Introduction

Heat exchangers for the Aircraft Reactor Test at the Oak Ridge National Laboratory had many design restrictions imposed on them by the planned application of the reactor to aircraft propulsion. It was necessary that the intermediate (molten salt-to-NaK) heat exchangers have a high performance capability in a compact geometry to minimize unit weight and reactor shielding requirements. Extreme reliability was required since the heat exchangers were unitized with the reactor package in a manner which made replacement impractical. Radiators (NaK-to-air) for the heat dump facility of the reactor test were designed with a high performance-to-weight ratio in order to investigate fabrication problems and reliability of an aircraft-oriented design.

Due to the many unique problems associated with proposed heat exchanger design, fabrication and operation, an extensive prototype testing program was initiated at ORNL. This program was designed to provide required heat transfer data, to prove proposed fabrication techniques and to insure reliability of proposed designs. At the same time, materials inspection techniques and standards were developed, valuable operating experience was gained and many auxiliary components required in the reactor system were developed and proven.

Test Units

A total of eighteen molten salt-liquid metal (NaK) heat exchangers and 20 liquid metal-air radiators were tested during the course of this program. The heat exchangers, constructed of Inconel, were nominally rated at 1/2 MW (megawatts) and 1-1/2 MW and employed longitudinal flow of the molten salt over a closely spaced bundle of small diameter tubes. NaK passed through the tubes in a counter-flow pattern. Figs. 1 and 2 illustrate the two basic

heat exchanger designs tested. The radiators were nominally rated at 1/2 MW and 1-3/4 MW and employed cross-countercurrent air flow over small diameter Inconel U-tubes with stainless steel clad copper, plate fins brazed to the tubes to form a compact matrix of extended heat transfer surface. Figs. 3 and 4 illustrate the two basic radiator designs tested.

All materials of fabrication were subjected to rigid quality control inspections including dye-penetrant and radiographic examination prior to acceptance for unit construction. All welding was performed by the heliarc process in accordance with rigid weld specifications to assure the highest possible joint integrity. In addition to welding, all tube-to-tube sheet joints were back-brazed with Coast Metal 52 brazing alloy (approximate composition 93% Ni, 4% Si, 3% B). This combination welding and brazing procedure was used to minimize stress concentrations at the root of the weld and to prevent leaks in the event of corrosion through localized areas of shallow weld penetration. Back brazing would also seal any welds which contained small cracks or other defects. All fin-to-tube joints in the radiator matrix were also brazed. In all cases, the brazing compound was preplaced during assembly of the units and brazing was accomplished after the units were otherwise completely fabricated. (1) (2)

The high conductivity, stainless steel clad copper fin material used in the radiators required edge-treatment after shearing to prevent oxidation of the copper core. This was done by applying slurried aluminum power to the edges of a stack of fins and heating to alloy the copper and aluminum. This aluminum bronze effectively prevented fin deterioration and loss of heat transfer effectiveness. The fins were punched and slipped over the Inconel tubes utilizing the extruded periphery of the punched hole as a spacer between fins.

Test Facilities

Three types of test facilities were used in the development program. In each, the process system was constructed entirely of Inconel with all components installed by means of inert gas backed, heliarc butt welds. Welds were, in general, subject to dye-penetrant testing and those in critical locations were radiographed prior to acceptance. One type facility (Fig. 5) was designed to test one 0.5 MW heat exchanger and one 0.5 MW radiator unit. This bifluid system consisted of a direct electrical resistance salt heater from which the molten salt was moved to the test heat exchanger and recycled to the heater. NaK was passed countercurrently through the heat exchanger to the air-cooled radiator and recycled to the heat exchanger. Three of these facilities were used in the test program. The second type facility (Fig. 6) was designed to test two 1.5 MW heat exchangers and two 0.5 MW radiators concurrently. In this system, the NaK was heated in a gas-fired furnace and then passed through the first heat exchanger to the two air-cooled radiator units. From there, the NaK was circulated through the second heat exchanger and back to the furnace. The molten salt was moved through the first heat exchanger where it was heated by the hot NaK from the furnace and then through the second heat exchanger where it was cooled by the NaK leaving the radiator. Two of these facilities were provided for the test program. The third facility type was designed to test the 1.75 MW radiator units and contained only a NaK circuit. NaK was heated in a gas-fired furnace and air-cooled in the test piece. One such facility was constructed.

In addition to the heat exchanger development which was carried out in these test facilities, information was accumulated on the performance and reliability of other high temperature loop components. Among these were

pumps, heat sources, NaK purification systems, valves, thermocouples, pressure measuring devices and flow measuring devices.

The pumps used in the test facilities have been previously described by Grindell (3). This versatile piece of equipment was a vertical shaft sump pump with an underslung impeller using an oil lubricated, pressure balanced floating ring seal. The sump from which the pump took its suction served as the surge tank for the system in which it was installed. The type Dana pump was used for both molten salt and NaK circuits delivering flows from 0-200 GPM at 0-300 ft. head.

The direct electrical resistance, molten salt heater design used in the smaller heat exchanger tests is illustrated in Fig. 7. The heater had an output capacity of 0.5 MW supplied by an A.C. welding transformer. The transformer was connected to the resistance heater by means of water cooled cables. Ground potential was supplied to the inlet and outlet heater terminals to avoid any electrical potential in the external loop and the variable potential was applied to the center terminal. Shorting bars were placed across bends in the heater to avoid overheating of the walls in areas where the salt flow profile was uneven.

The gas-fired NaK furnaces used in the larger heat exchanger tests are illustrated in Fig. 8. The heat transfer section consisted of a single row of vertically mounted pipes between a lower and upper donut header. A centrally mounted burner supplied 1 - 1.5 MW of heat at 48% thermal efficiency.

The NaK purification system used on all liquid metal circuits was basically as illustrated in Fig. 9. It consisted of an economizer, an air and water cooled cold trap, a throttling valve and an EM flow meter. The cold trap contained Inconel demister packing for sodium oxide retention. This system was mounted in parallel with the radiator(s), utilizing radiator

pressure drop as the driving force for flow. A plug indicator, illustrated in Fig. 10, was similarly mounted and used to indicate the Na_2O concentration in the system. This was done by cooling the bypass stream until Na_2O precipitation affected flow by plugging small holes in a perforated plate. The plug indicator gave definite measurements down to an indicated oxide concentration of 100 ppm (wt.) and less accurate determinations in the 30-100 ppm range. The cold trap was capable of reducing measured oxide concentration from 600-800 ppm to $<$100 ppm in 50-100 hours for NaK systems of 20-80 gallon capacity. The time to clean the system was a direct function of system volume and of the care required to prevent oxide plugging problems in cold trap circuit piping.

Commercial valves with bellows sealed stems were used for shut off and throttling service in the NaK circuit as required. The single valve application in the salt circuit (sealing the circulating system from the storage tank) was satisfied by an air cooled "freeze" valve. This valve consisted of an air cooled section of pipe which was flattened in the freeze area to provide the flexibility required to absorb the expansion of the salt when remelting to open the valve.

Test Program

The test program for the prototype salt-to-NaK heat exchangers and NaK-to-air radiators was designed to provide heat transfer data required for ART design, to prove the integrity of the test piece mechanical design and to test the reliability of the methods of fabrication which were used. Operating conditions imposed were representative of expected ART operating conditions with the basic program being:

500 hours of isothermal operation at 1200°F

500 hours at ART design conditions

heat exchanger salt inlet	1600°F
heat exchanger salt outlet	1250°F
heat exchanger NaK inlet	1070°F
heat exchanger NaK outlet	1500°F
radiator NaK inlet	1500°F
radiator NaK outlet	1070°F

500 hours at part load

heat exchanger salt inlet	1500°F

30 thermal cycles (minimum) from full to no load

Many variations from this basic schedule were made during the program in order to allow investigation of the performance of auxiliary equipment and to obtain other data of interest.

In all, eighteen heat exchangers and twenty radiators were subject to intensive testing (4) (5).

0.5 MW heat exchangers	9
1.5 MW heat	9
0.5 MW radiators	18
1.75 MW radiators	2

The test program clearly indicated that the prototype molten salt-NaK heat exchangers possessed the performance capabilities and mechanical integrity to meet ART design requirements. Consideration of the three heat exchanger failures encountered led to the conclusion that the controlling factor with respect to heat exchanger life was thermal cycling of heat exchanger tubes weakened by fused salt corrosion at the elevated temperatures required in the ART application. Severe thermal cycling in the absence of corrosion

was responsible for one of the heat exchanger failures as shown in Fig. 11. The failure occurred in a tube wall just above the header near the end with the shorter span from the header plate to the tube bend. In spite of the severe deformation of the tubing, post-operative metallurgical examination showed no fatigue cracks in tubes near the failed one. This indicated that a flaw may have existed in the one tube involved. More intensive material inspection prior to fabrication of test units effectively eliminated this source of difficulty. The two other failures were attributed to cracks opened up by representative thermal cycles after considerable fused salt corrosion had taken place. Fig. 12 shows a tube wall section from the region between the tube bend and the header plate. The tube is one of those having the shortest header-to-bend lengths. The contact temperature between the molten salt and the Inconel wall was as high as 1600°F during 1800 hours of operation. Voids along the grain boundaries extend completely through the tube wall, and cracks of the type shown can occur when the tubing is thermally cycled.

The helical tube heat exchanger proposed for the ART application had the advantage of being able to absorb differential thermal expansion over the entire tube length. In the closing phase of the test program, a heat exchanger having semicircular tubes to simulate this geometry was operated at ART conditions through 194 thermal cycles before failure.

The 0.5 Mw prototype NaK-air radiators met ART heat transfer and pressure drop requirements and demonstrated the ability to perform reliably through a test program exceeding the ART requirement in length and severity. Satisfactory radiator performance required high quality materials of construction, close control of fabrication and assembly processes, and precautions to avoid excessive thermal stress in the tube-fin matrix during operation

above 1200°F. (6) Early test experience dictated the removal of structural members in and around the radiator core, and following this design change, the primary concern was to insure evenly distributed air and/or NaK flow through the core. The most serious threat to radiator integrity was posed by an inadvertent leak of molten salt into the NaK system and plugging of individual radiator tubes by solid reaction products. Na_2O plugging of the radiator tubing could similarly impose high thermal stresses in the tube-fin matrix leading to failures of the type illustrated in Fig. 13, but proper cold-trapping techniques effectively eliminated this possibility.

Both 1.75 Mw NaK-air radiators met ART heat transfer and pressure drop performance requirements but failed during thermal cycling testing. The second unit underwent 180 thermal cycles prior to failure, six times the number proposed for the ART operation. The program was terminated before sufficient development work had been carried out to allow confident prediction of satisfactory radiator life in the reactor application.

References

1. P. Patriarca, et al, Heat Exchanger Fabrication, The Welding Journal, December, 1957.

2. P. Patriarca, et al, Fabrication of Heat Exchangers and Radiators for High Temperature Reactor Applications, ORNL-1955, June 14, 1956.

3. A. G. Grindell, W. F. Boudreau, H. W. Savage; Development of Centrifugal Pumps for Operation with Liquid Metals and Molten Salts at 1100-1500°F; 1959 Annual Meeting, American Nuclear Society, June 15-17, 1959, Gatlinburg, Tennessee.

4. R. E. MacPherson, et al, ART Prototype Radiators-Development Program and Metallurgical Results, ORNL-2436, to be published.

5. J. C. Amos, et al, ANP Heat Exchanger Development 1955 through 1957, ORNL-2439, to be published.

6. A. P. Fraas, Design Precepts for High Temperature Heat Exchangers, 1959 Winter Meeting, American Nuclear Society, November 4-6, 1959, Washington, D. C.

UNCLASSIFIED
ORNL-LR-DWG-42581-A

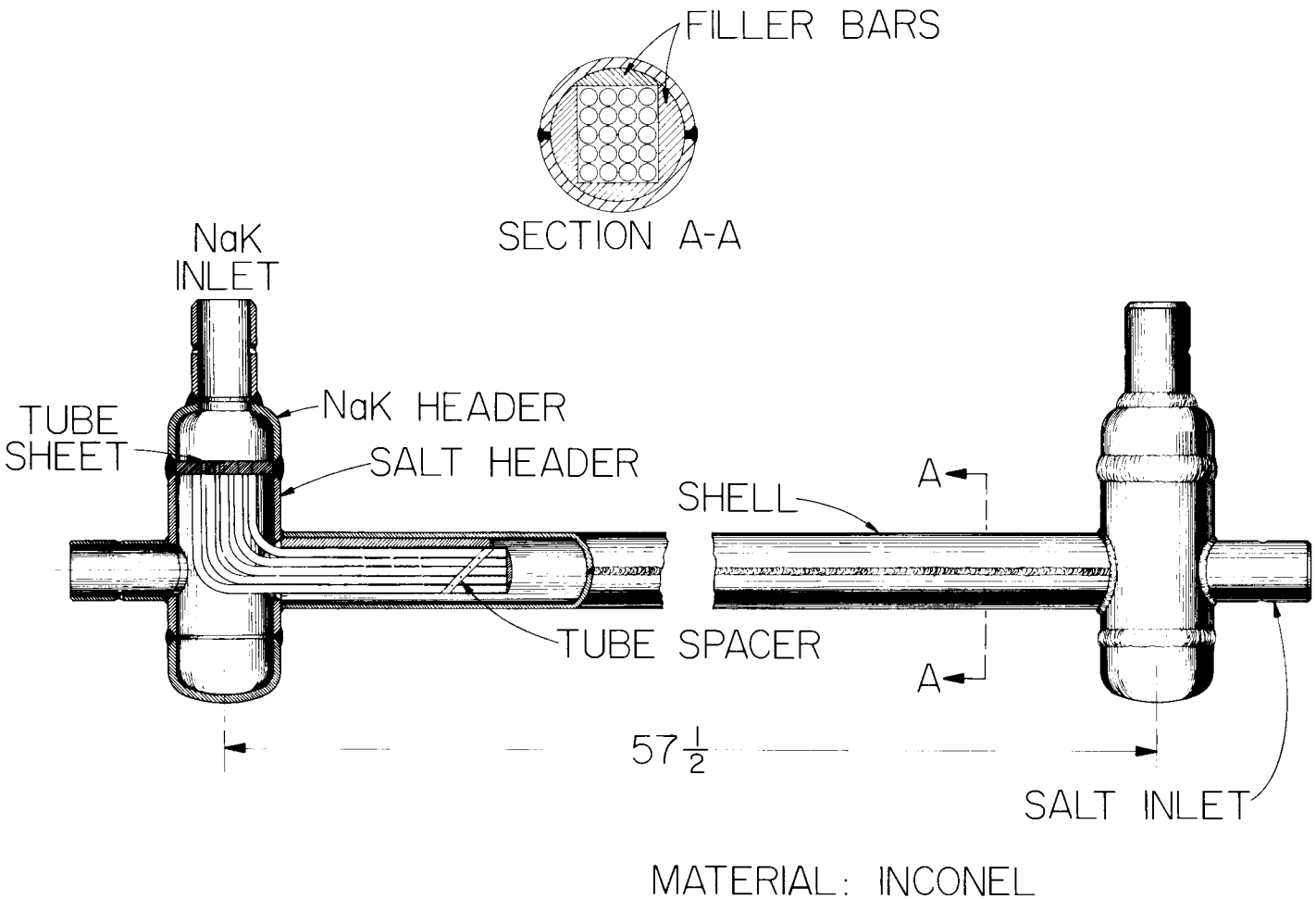

Fig. 1. 0.5 Magawatt Heat Exchanger

UNCLASSIFIED
ORNL-LR-DWG-42582-A

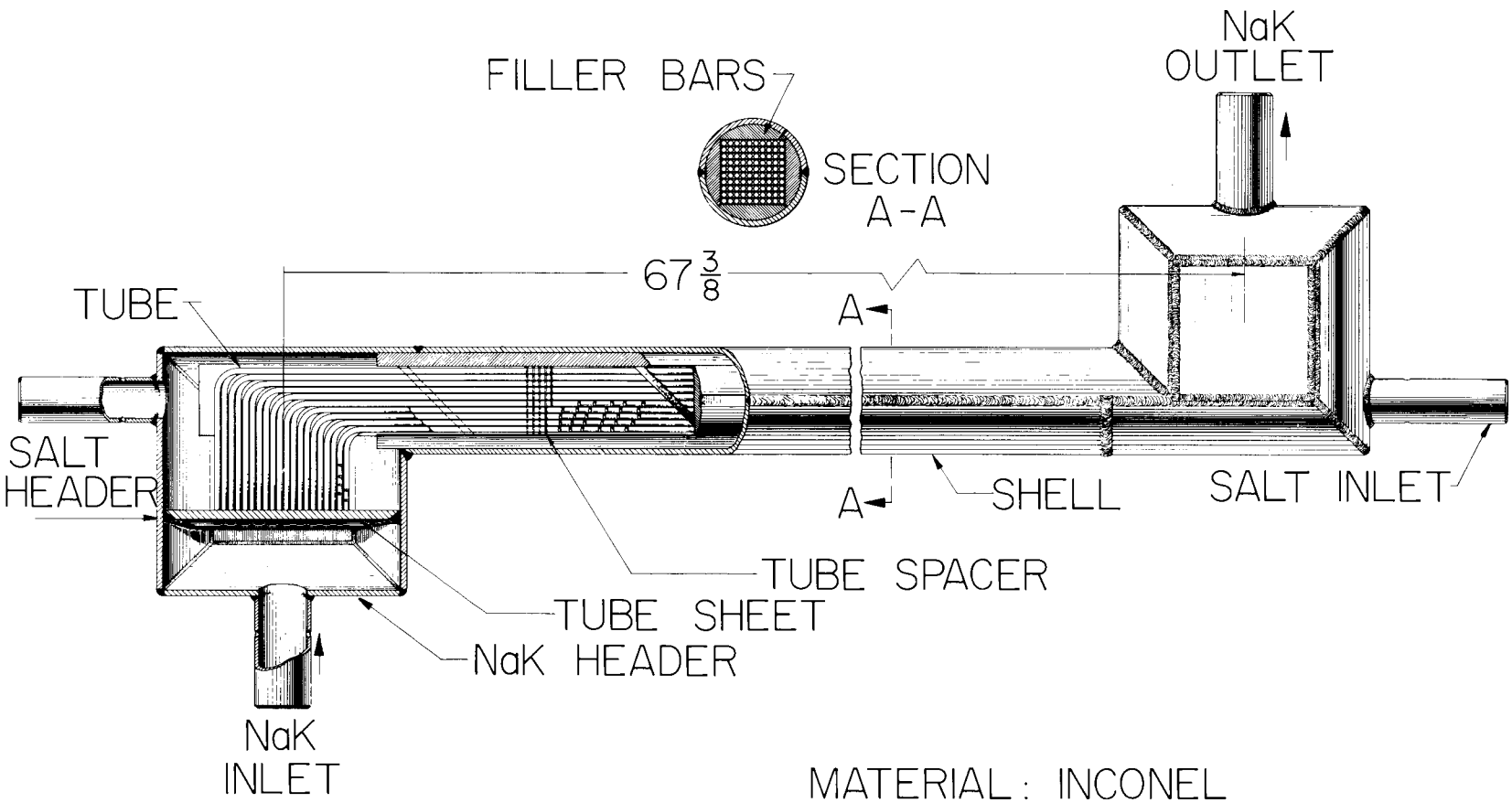

Fig. 2. 1.5 Megawatt Heat Exchanger

UNCLASSIFIED
ORNL-LR-DWG-42587

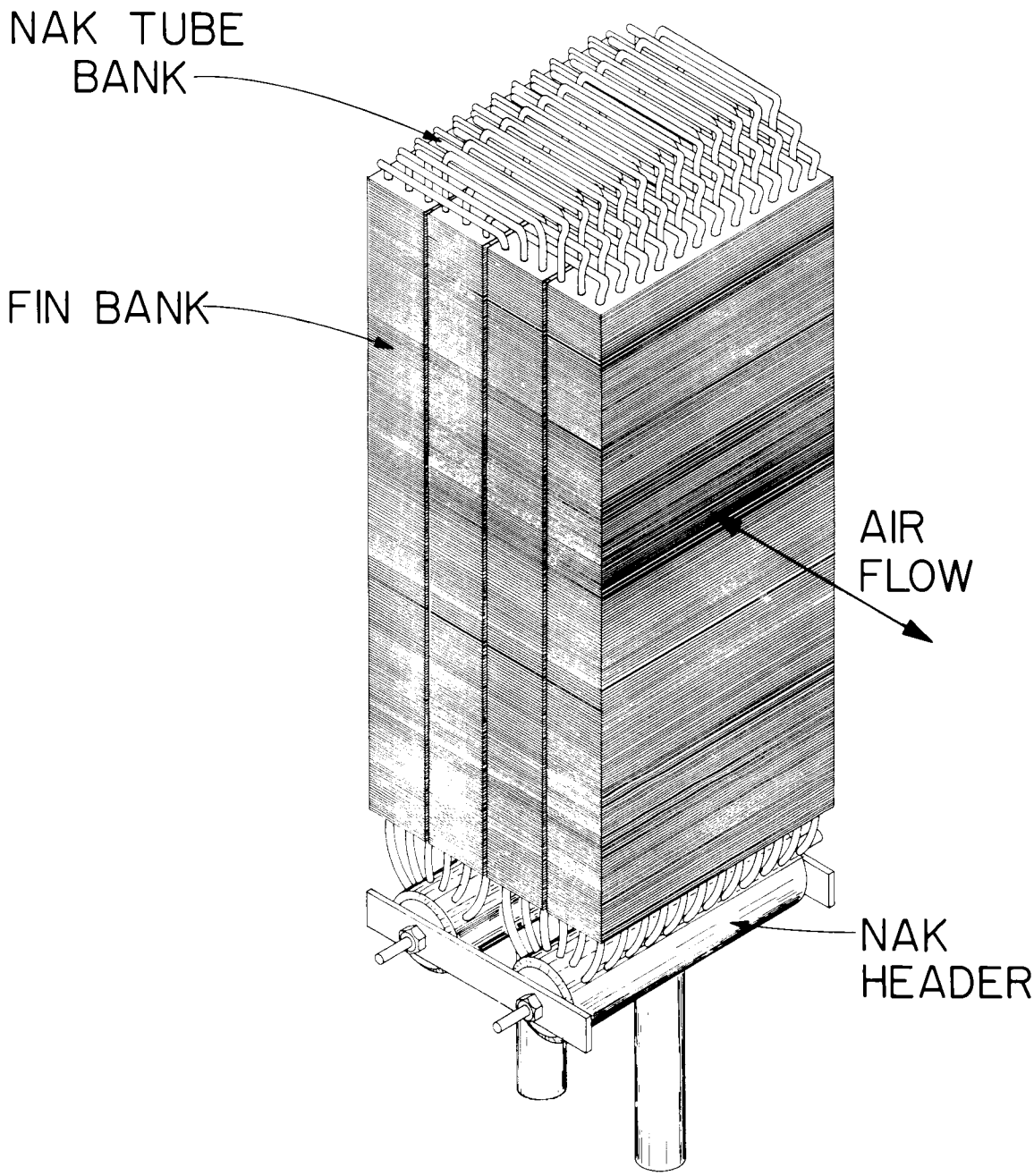

Fig. 3. 0.5 Megawatt Radiator

UNCLASSIFIED
ORNL-LR-DWG-42586

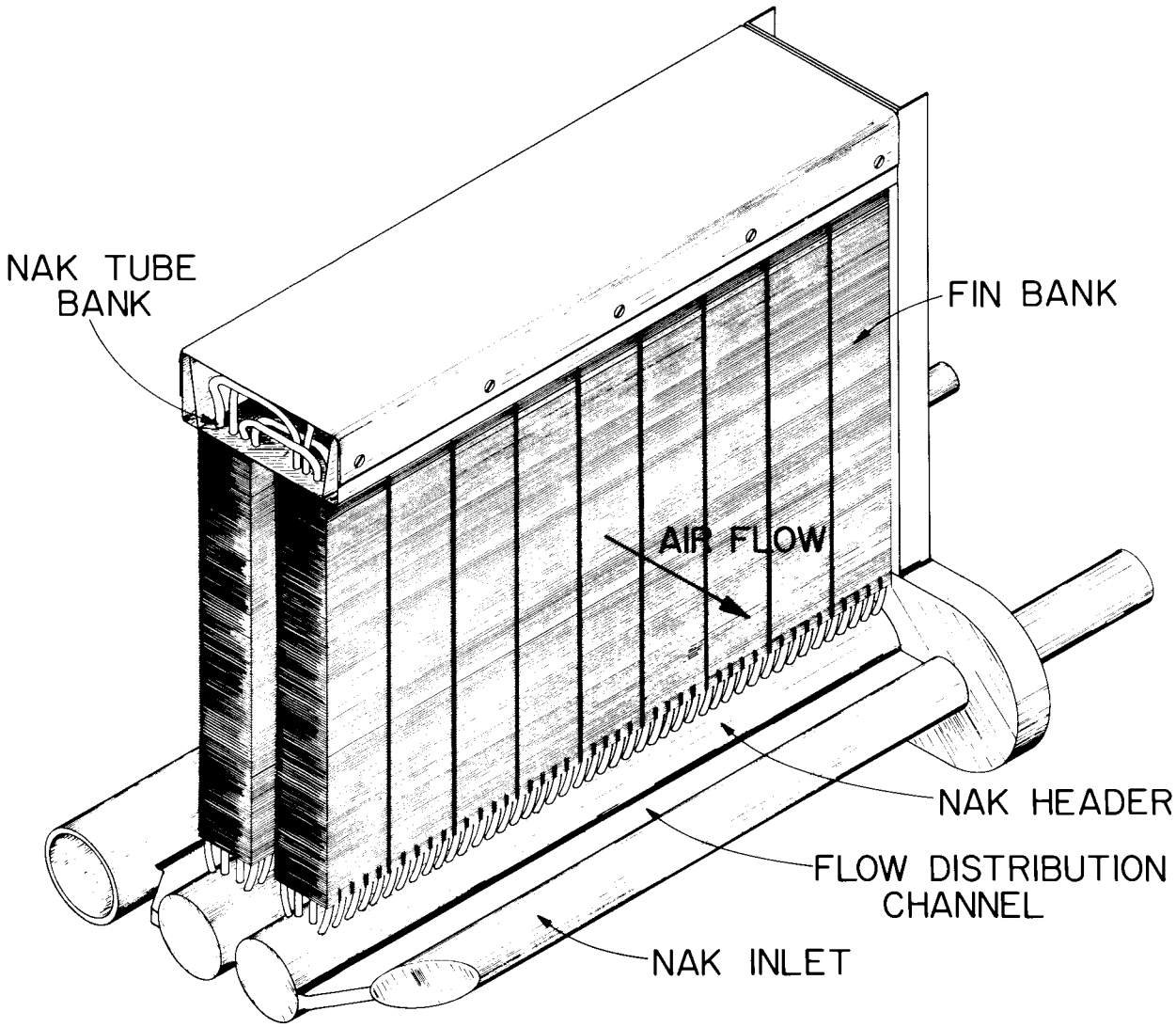

Fig. 4. 1.75 Megawatt Radiator

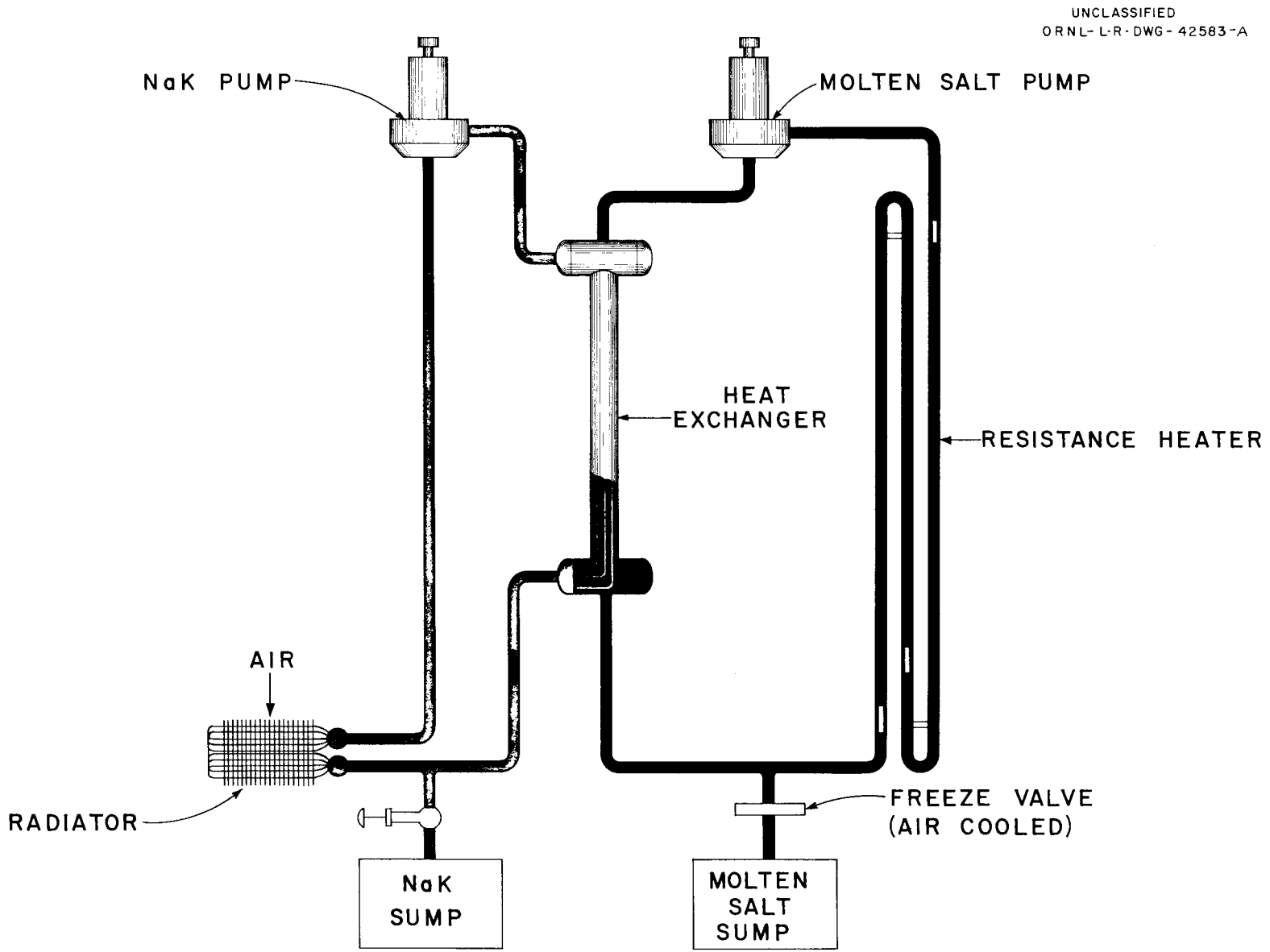

Fig. 5. 0.5 Megawatt Heat Exchanger Test Stand

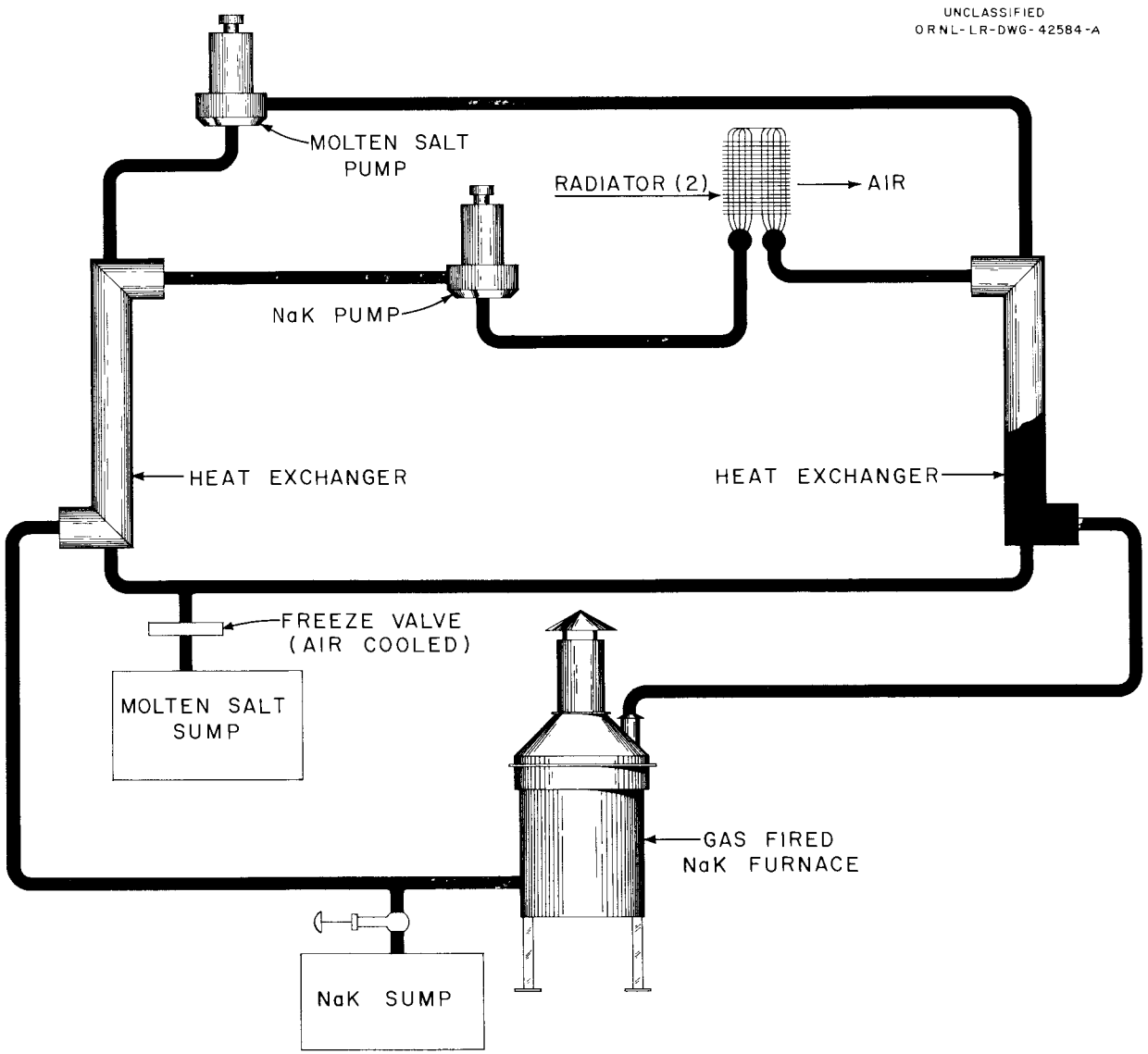

Fig. 6. 1.5 Megawatt Heat Exchanger Test Stand

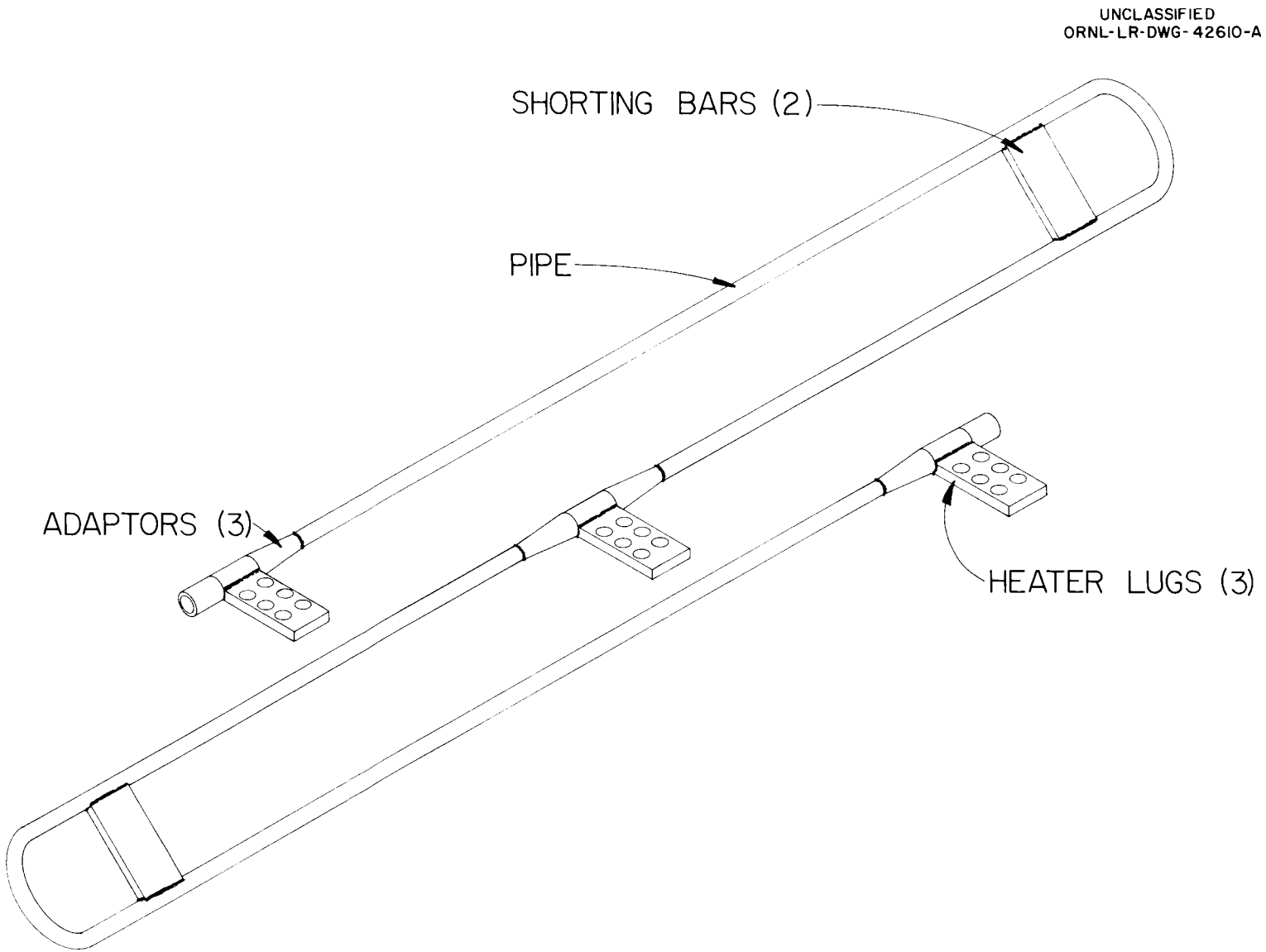

Fig. 7. Direct Electrical Resistance Heater

UNCLASSIFIED
ORNL-LR-DWG-42580-A

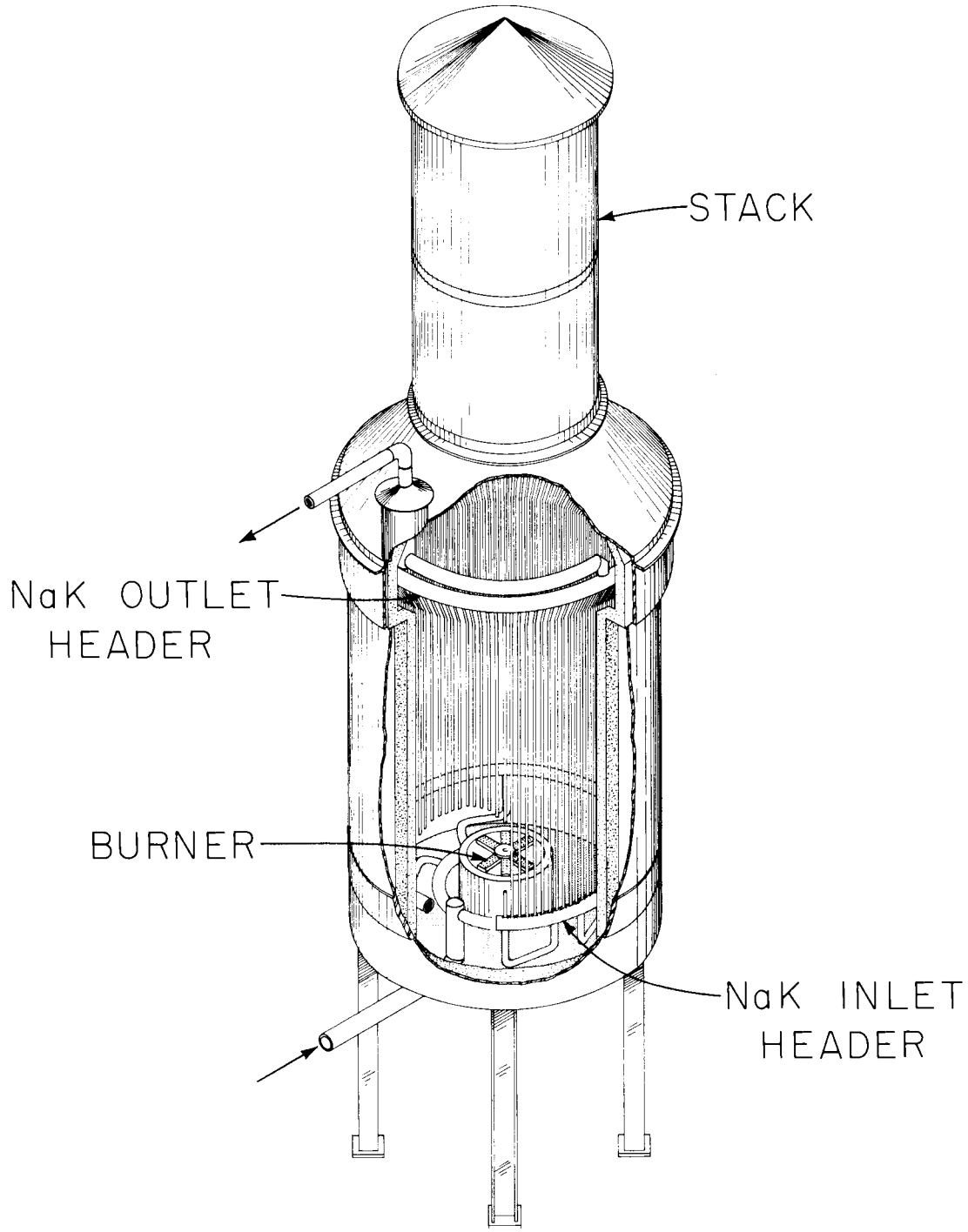

Fig. 8. 1 Megawatt Gas-Fired NaK Heater

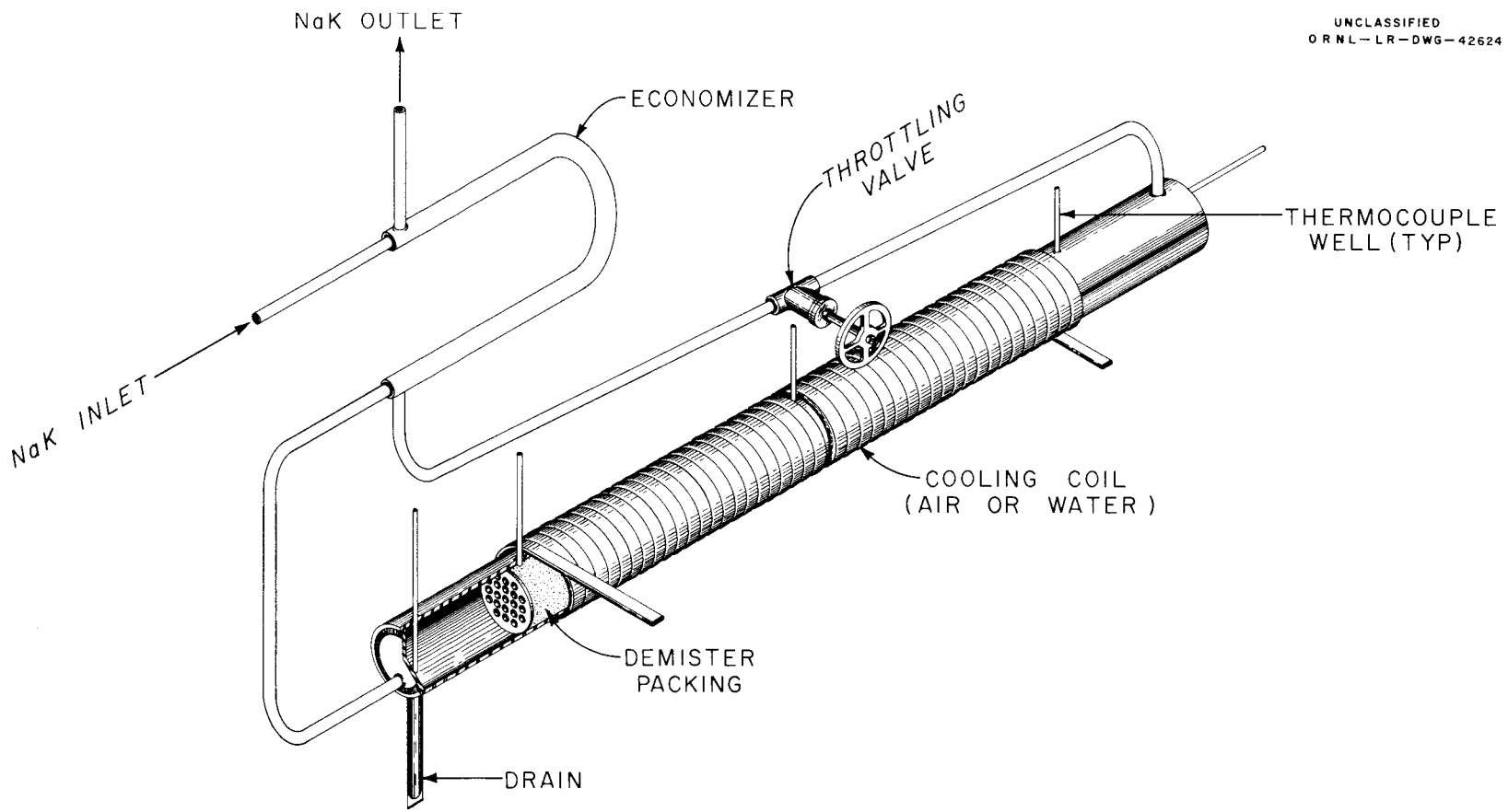

Fig. 9. Nak Purification System

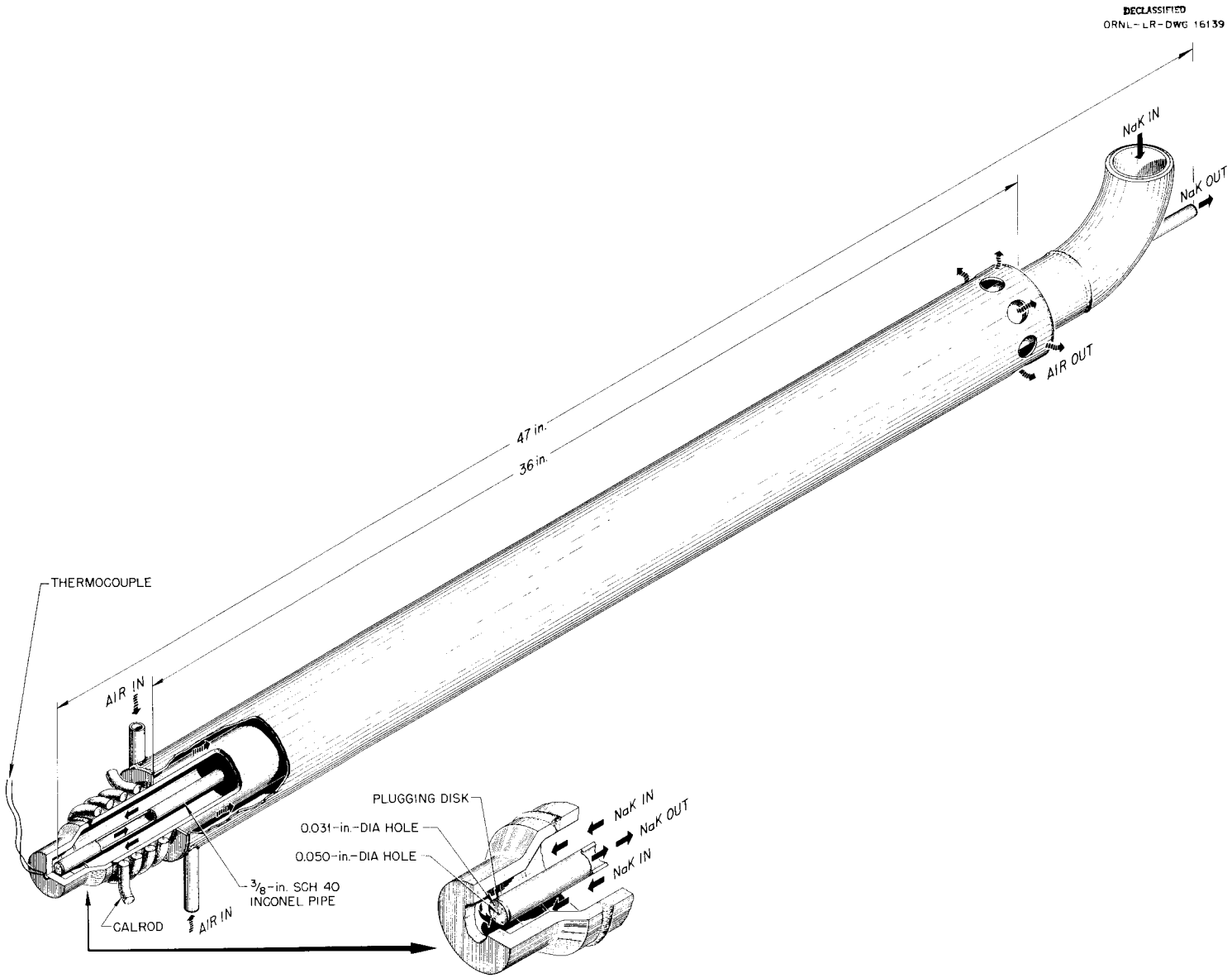

Fig. 10. Plug Indicator

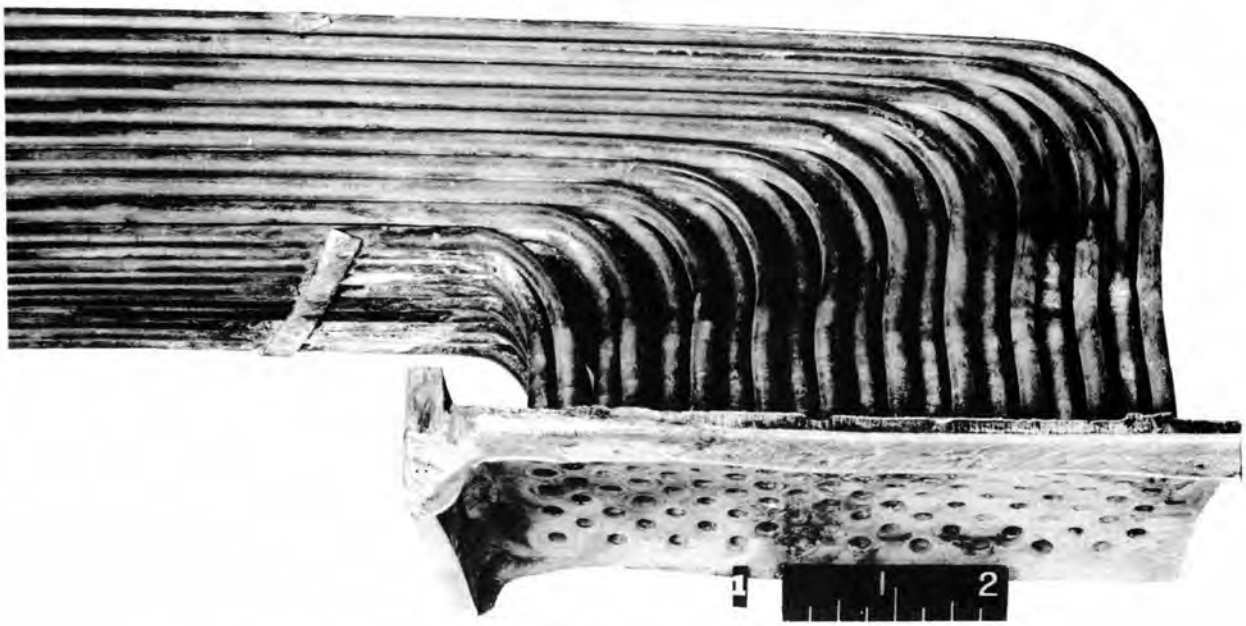

Fig. 11. Results of Severe Thermal Cycling

Fig. 12. Tube Wall Failure -- Heat Exchanger

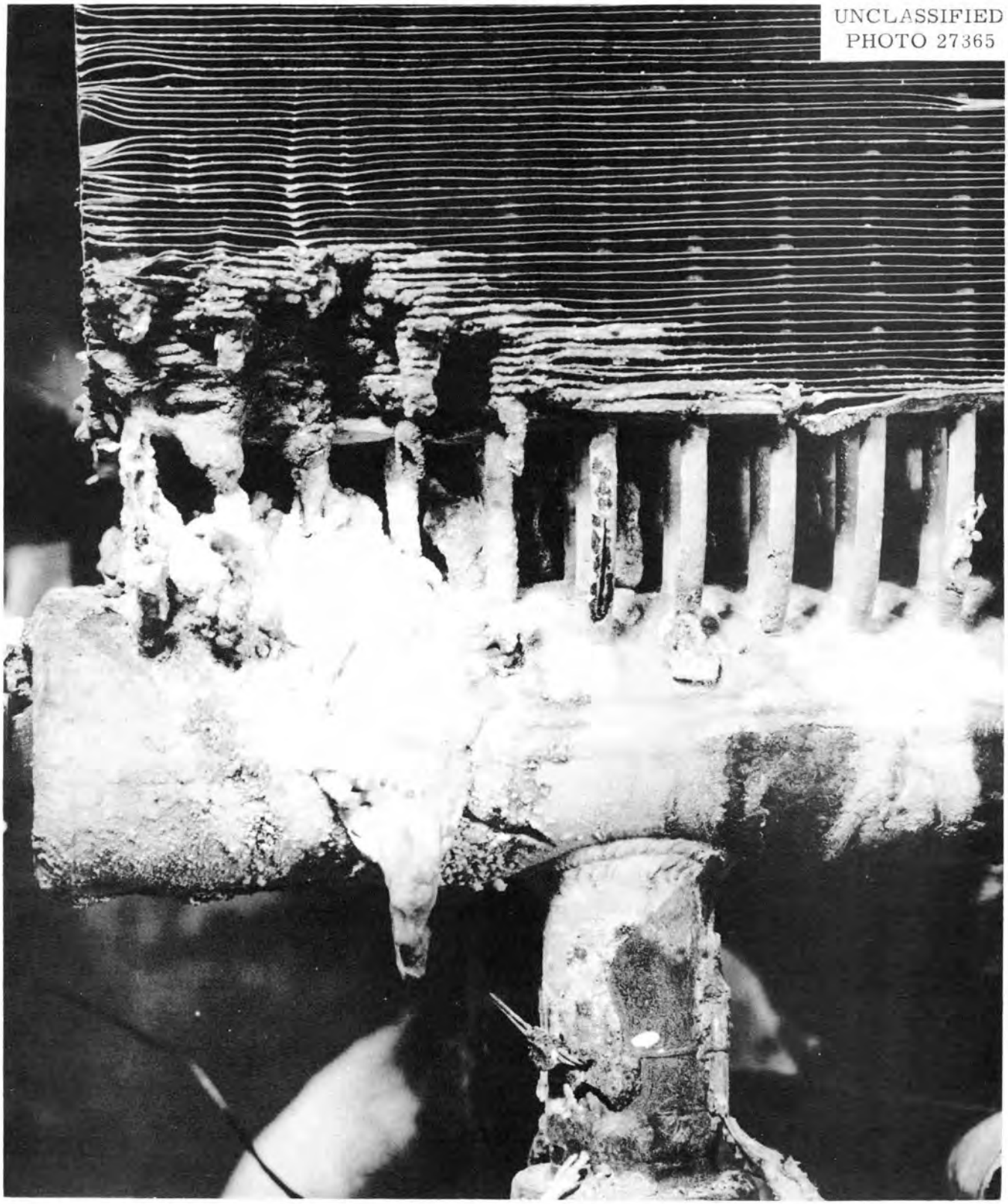

Fig. 13. Tube Plugging Failure - Radiator

EVALUATION OF THE PERFORMANCE OF LIQUID METAL AND MOLTEN SALT HEAT EXCHANGERS

M. M. Yarosh
Reactor Projects Division
Oak Ridge National Laboratory

List of Figures

Fig. 1 Heat Transfer Characteristics for Fluoride Heat Exchanger SHE-1 (ORNL-LR-Dwg. 42863)

Fig. 2 Heat Transfer Characteristics for 12 Fluoride Heat Exchangers (ORNL-LR-Dwg. 42860)

Fig. 3 Heat Transfer Characteristics for External Tube Flow with Water (ORNL-LR-Dwg. 42871)

Fig. 4 Heat Transfer Characteristics for Fluoride Flowing through Small Tubes (ORNL-LR-Dwg. 42878)

Fig. 5 Colburn j-Factor Graph for Fluoride Flowing through Small Tubes (ORNL-LR-Dwg. 42873)

Fig. 6 Typical Spacer Comb - 25-Tube Bundle (Photo 24272)

Fig. 7 Pressure Drop Values for a Number of Spacer Configurations (ORNL-LR-Dwg. 42868)

Fig. 8 Apparent Tube Friction Factor for External Tube Flow in 25-Tube Bundle (ORNL-LR-Dwg. 45170)

Fig. 9 Apparent Total Friction Factor for External Tube Flow in a 260-Tube Bundle (ORNL-LR-Dwg. 45168)

Fig. 10 Molten Salt Pressure Drop for 20-Tube Heat Exchanger SHE-1 ORNL-1 (ORNL-LR-Dwg. 45169)

Fig. 11 Radiator Performance for Ten 1/2-Mw Y-Units (ORNL-LR-Dwg. 42866)

Fig. 12 Radiator Performance for Eight 1/2-Mw Units (ORNL-LR-Dwg. 42875)

Fig. 13 Good Fin-to-Tube Bond (Photo Y-33214)

Fig. 14 Poor Fin-to-Tube Bond (Photo Y-33212)

Fig. 15 Fin Oxidation (Photo Y-33213)

Fig. 16 Heat Transfer Composite Data for ART Radiator Test Units Nos. 1 and 2 (ORNL-LR-Dwg. 42870)

Fig. 17 Comparative Performance of 1/2-Mw and ART Radiator Test Units (ORNL-LR-Dwg. 42872)

Fig. 18 Comparative Performance of ART Radiator Units with 1/2-Mw Units on j-Factor (ORNL-LR-Dwg. 45167)

Fig. 19 Air Pressure Drop for Nine 1/2-Mw Y-Units (ORNL-LR-Dwg. 42869)

Fig. 20 Hot Air Pressure Drop for ART Test Radiators 1 and 2 (ORNL-LR-Dwg. 42862)

Fig. 21 Air Pressure for ART Test Radiator 1 (ORNL-LR-Dwg. 42861)

Fig. 22 NaK Pressure Drop Buildup in ART Radiators (ORNL-LR-Dwg. 42874)

Abstract

Heat transfer and pressure drop test data were obtained on liquid metal-to-molten salt heat exchangers and on liquid metal-to-air radiators. The data were correlated to permit predictions of the heat transfer and pressure drop performance of heat exchange equipment to be used on the Aircraft Reactor Test scheduled at the Oak Ridge National Laboratory.

EVALUATION OF THE PERFORMANCE OF LIQUID METAL AND MOLTEN SALT HEAT EXCHANGERS

The stringent operational requirements for the heat exchange equipment planned for the Aircraft Reactor Test at Oak Ridge National Laboratory necessitated that the heat transfer and pressure drop performance of the heat exchange components be well established by extensive component testing. The performance data obtained in the test program carried out at Oak Ridge developed a firm design basis on which to size the heat exchange units.

The main heat exchangers for the Aircraft Reactor Test were located within the primary reactor pressure shell and were designed to operate with NaK (56 wt % Na and 44 wt % K) flowing through the tubes and molten salt fuel in counterflow surrounding the small close-packed tubes. The design conditions were such that the salt flow was within the transition region for forced-convection heat transfer. This served to complicate the problem of predicting in advance of test data the heat transfer and pressure drop performance of the units. The test program was designed to permit study of the entire transition region to enable an accurate sizing of the heat exchangers. Studies were also carried out on a variety of tube spacer arrangements to determine the effects of tube spacer design on the unit performance.

The flow range of principal interest on the molten salt side of the exchanger covered a Reynolds number range from approximately 1000

to 6000. The NaK flow operating range for the test program varied from Reynolds numbers of 15,000 to 200,000.

Initial Molten Salt Heat Transfer Test

The initial molten salt heat transfer data were obtained from a test performed on a 20-tube bundle of 3/16-in.-dia Inconel tubes spaced on 0.220-in. centers.(1) The tubes were arranged in a 5 x 4 matrix in a rectangular channel. The tube bundle was approximately 6 ft in length. Wire spacers (see Fig. 6) were located at 5-in. intervals along the tube length and maintained tube center line spacing. The spacer wires were staggered to different axial positions along the bundle to reduce pressure drop.

A heat balance across the heat exchanger was obtained by measurement of NaK flow, NaK inlet and exit temperatures, salt flow, and salt inlet and exit temperatures. Two independent measurements of NaK flow were made, one utilizing an electromagnetic flowmeter and the other employing a venturi. The two measurements permitted a cross-check on the NaK flow. In addition, a further check on heat input was to be obtained from the measured electrical input to the resistance heater in the salt circuit. Unfortunately, calibration difficulties with the salt venturi meter and measurement errors on the resistance heater input reduced the available data for cross-checking the heat balance obtained.

The two NaK flow measurements together with the temperature readings provided a satisfactory check on the heat input. Data where these measurements differed by more than 10% were not used in the analysis.

Chromel-alumel calibrated thermocouples installed in tube wells extending into the fluid stream were used to measure NaK and salt temperatures entering and leaving the heat exchanger. At least two thermocouple wells were installed in each fluid at each end of the heat exchanger. A heat guard was installed around the inner layer of insulation on the heat exchanger and a zero-degree radial temperature difference through the heat exchanger insulation was maintained by variac control on these heaters.

Within the limitations of the equipment an attempt was made to maintain NaK and salt Δt values approximately the same. This was principally to avoid unduly close approach temperature at the ends of the heat exchanger. A salt-to-NaK temperature difference of 50°F was set as a minimum acceptable value at the hot end of the exchanger.

Analysis of Data

Calculations for the salt-side heat transfer coefficient were based on the average heat load as determined from the two independent NaK flow measurements and the NaK temperature measurements. Salt flow was then calculated from the NaK heat load and the salt temperature measurements. The NaK-side heat transfer coefficient was based on the Kaufmann-Lubarsky equation for liquid metals:(2)

$$Nu = 0.625 \, (Re \times Pr)^{0.4}$$

The molten salt data were correlated by plotting $Nu/Pr^{0.4}$ against Re number. Salt properties were evaluated at bulk temperature conditions for the unit.(3) The equivalent diameter for the Nusselt number was based on the heated perimeter while that for the Reynolds number was

based on the wetted perimeter. Figure 1 shows the data so plotted for the initial test described.

Data were taken at startup, after 500 hr, and after 1000 hr of operation. No deterioration of the salt coefficient occurred with time of operation. Also shown on the graph is a plot of the Dittus-Boelter equation. The data lie approximately 40% below the Dittus-Boelter line in the Reynolds range of interest. At the higher Reynolds numbers the data appear to be approaching closer to the classical Dittus-Boelter line.

Subsequent heat transfer tests on 20-, 25-, and 100-tube bundles produced results in substantial agreement with those initially obtained. Figure 2 shows a composite plot of the data from 12 heat exchangers for which heat transfer performance data were obtained.(4) The additional data indicated that the performance curve was more nearly parallel to the Dittus-Boelter line and within the range of the data was not approaching the above line in the manner indicated by the earlier results.

Heat balances on which calculations for the heat transfer coefficients were based were derived for each individual test from an examination of the test data for consistency and agreement. By this means it was possible to eliminate a number of obviously erroneous measurements. The data presented were accumulated on four test stands in 12 heat exchanger tests with many participating personnel. Considering the variables introduced by such factors the agreement of the data shown in Fig. 2 is good.

Included in Fig. 2 are data taken on a type-9 heat exchanger. This heat exchanger had tubes bent into a half-circle and was constructed

primarily to investigate stress anslysis problems associated with such circular designs. The heat transfer data from this test showed no noticeable deviation in performance from that of a straight-tube exchanger indicating the effects of bundle curvature on the unit capacity were not significant for these conditions.

A water test was performed on a 100-tube heat exchanger of a geometry similar to those used for the molten salt tests already described.(5) The curve obtained on the water test (Fig. 3) agreed closely with results obtained on the molten salt tests.

In a more recent test (Fig. 4), data were obtained on a heat exchanger in which the molten salt was directed through the tubes and the NaK flow was external to the tubes.(6) The graph shows a plot of the data obtained for two different salt mixtures and also the composite line representing the data of Fig. 2 for shell-side flow. This figure illustrates the necessity for firm information on the salt-side heat transfer coefficient. The shape of the characteristic curve in the transition region proved to be significantly different for shell-side flow than for tube-side flow for the design geometry under study. For Reynolds numbers between 1000 and 3000 the internal tube coefficients were from 20 to 100% below the shell-side coefficients at corresponding Reynolds numbers.

The tube-side data approach the classic Dittus-Boelter line at higher values of the Reynolds number. The deviation of tube-side data from the shell-side data at the lower Reynolds numbers is in part a result of the effect of the tube spacers acting as turbulence promoters,

particularly in the lower Reynolds number range. The effect is equivalent to the variation of L/D for inside tube flow and the results are in the direction one would expect, with the external flow having much lower L/D values at a given Reynolds number. A j factor plot (Fig. 5) of the latter data shows the characteristic curve for the transition region.

Molten Salt Pressure Drop

Limitations on the available head from the molten salt pumps in the Aircraft Reactor Test and other design considerations offered strong incentives to minimize salt pressure drop through the main heat exchanger. Therefore, an investigation was undertaken on a 25-tube matrix to determine suitable designs for the spacer combs required in the exchanger with the view towards minimizing the pressure drop due to the spacers.(7) A number of spacer designs were tested and correlations were obtained expressing the pressure drop with each spacer design in terms of a spacer friction factor. This spacer friction factor was then used in conjunction with a modified tube friction factor obtained from the same series of tests to correlate the over-all pressure drop in the heat exchangers. Figure 6 shows one of the typical spacer configurations tested. A curve of total pressure drop vs Reynolds number (Fig. 7) for a number of spacer configurations illustrates the degree of total pressure drop variation for those spacer configurations investigated. Results were plotted in terms of the modified tube friction factor vs Reynolds number (Fig. 8) using the data obtained in the water tests. It is evident that the apparent external tube friction factor is well above the Poiseuille and

Blasius curves. This reflects the effect of the spacers increasing turbulence along the tube walls, but does not include primary dynamic losses due to the spacers. Turbulence occurs at very low values of the Reynolds number, giving rise to higher pressure drops and higher apparent external tube friction factors.

Other investigations were undertaken on larger tube matrices than those used in the test referred to above. These latter tests were designed to minimize geometry effects and test selected spacer designs. A water test was carried out for a tube bundle of 260 tubes in a rectangular channel approximately 7.5 ft in length.(8) Results were plotted (Fig. 9) in terms of a total friction factor defined in a manner similar to the conventional friction factor, but including in the defined friction factor all pressure drop losses due to the spacers. As would be expected the total modified friction factor is well above the conventional friction factor for tubular flow over the Reynolds range of interest for the design. At normal operating conditions an increase of 50 to 100% in pressure drop over that for straight tubular flow occurred. A departure from the laminar flow curve occurs at a Reynolds number of approximately 350.

Water pressure drop data such as the above enabled a more meaningful correlation of the results of pressure drop measurements made on the molten salt heat exchanger tests. The total friction factor was defined as follows:

$$f_T = f_t \left(\frac{L}{D}\right) + f_s (n)$$

where

n = the number of spacers

f_t = a modified tube friction factor from the water data

f_s = a spacer friction factor defined from the water data

f_T = modified total friction factor

The values for the spacer friction factor and the modified tube friction factor were derived from the water pressure drop tests.(7)

The total pressure drop for a tube bundle exclusive of end effects can be expressed in consistent units as follows:

$$\Delta H = f_t \frac{L}{D}\left(\frac{V^2}{2g}\right) + n\, f_s \left(\frac{V^2}{2g}\right)$$

where

ΔH = pressure loss

L = length of tube

V = velocity of fluid

If one were to define the total friction factor for a tube bundle somewhat differently as:

$$f_T' = \frac{\Delta H}{\left(\frac{V^2}{2g}\right)\frac{L}{D}}$$

a value comparable to the conventional friction factor, but including the spacer drop in the friction factor would be obtained. Figure 9 represents such a definition for the particular exchanger tested.

For the correlation of pressure drop data from molten salt tests it was found convenient to represent the pressure drop in terms of the modified total friction factor f_T (Fig. 10) adjusted to the L/D for the bundle being tested. In this graph calculated f_T included the end losses

in the measured pressure drop and the defined friction factor. The effects of operating time on measured pressure drop indicated no deterioration of the friction factor with time over the test interval (Fig. 10). A calculated curve based on the spacer friction factor and modified tube friction factor as derived from the water tests gave results in good agreement with the measured molten salt pressure drop. The calculation of the end effects including the effects of crossflow at the ends of the exchanger complicate the comparison of calculated to experimentally-measured pressure drop.

Radiator Performance Test Data

The design requirements for the air heat exchangers to be employed on the ART were not quite so stringent as those for the primary heat exchangers. For the immediate purposes of the reactor test the air radiator units were to demonstrate that high air temperatures could be obtained. The units were not designed as prototype aircraft radiator units. The principal requirement so far as the ART was concerned was that the units have a high degree of endurance and reliability. Nevertheless, it was thought useful to design units having as high a power density for heat dissipation as practical. In addition, many concepts were used in the design that could prove useful in more advanced radiator units. Small-diameter tubes, high-conductivity fins, and geometry of the unit all contributed to obtain the higher power densities.

The core matrix of the proposed aricraft reactor test radiators was incorporated in the design of smaller nominally 1/2-Mw radiator units.(9) These radiators served both as performance test units for

the ART radiator design and as heat dumps for the heat exchanger test rigs in which the previous heat exchanger test data were obtained.

Performance data were obtained on 18-1/2-Mw units.(10) Because of limitations of the test equipment the heat load on the radiators was based on the measured NaK heat load on the radiator unit and air flow rates were than calculated using air temperature measurements. A graph of test results on a total of ten 1/2-Mw units all manufactured by the same vendor was plotted (Fig. 11). Reference line 2 on the graph shows results from one of the very early 1/2-Mw units whose performance was significantly below those of later units tested. Figure 12 is a similar graph showing references lines 1 and 2 of the previous graph and data taken on eight additional 1/2-Mw radiator units manufactured by four other vendors. The bulk of the units had performance capabilities in good agreement with reference line 1. A few of the units, however, again gave reduced performance.

A postoperation metallurgical examination of all radiator units was carried out as part of the experimental program. As part of this examination in an effort to determine the reasons for the variation in performance of radiator units the radiators were sectioned and the units examined to determine the quality of the fin-to-tube bond and for evidence of oxidation of the copper matrix in the stainless steel fin. The degree of fin oxidation and quality of fin-to-tube bond was established from examination of a large number of sections and the selection of sections typical of each classification of quality.

A good fin-to-tube bond with 100% fin adherence is illustrated in Fig. 13, while Fig. 14 shows a unit having a very poor fin-to-tube bond with little of the brazing alloy between the fin and tube sections. Oxidation of the copper matrix in the fin occurred during operation of the radiator units, as shown in Fig. 15. A tabulation of the results from examination of a number of the radiator units (Table I) indicates the variation in the quality of fin-to-tube bond and the degree of fin oxidation for the units examined.

The task of relating the unit performance to the quality of the fin bond and fin oxidation resulted in no consistent correlations. Units with apparently poor fin bond and higher degrees of oxidation showed little variation in capacity from units with excellent fin bond and little fin oxidation. This can be seen from a close examination of Figs. 11 and 12 and Table I.

An examination of the history of one of the test stands in which the radiator units were operated indicated a relationship between the failure of a molten salt heat exchanger with release of salt into the NaK system and the performance of subsequent radiator units tested in that NaK system.

Although cleaning of the system was carried out after the failure, evidence of salt deposits was found in subsequent radiator units tested in that system after all cleaning and repairs were completed. The effect of a salt film on the NaK-side of a radiator unit could be responsible for some deterioration in unit performance, but the evidence for this effect is not conclusive.

Aircraft Reactor Radiator Tests

A carefully planned performance test was carried out on two 1.75-Mw modified Aircraft Reactor Test prototype radiator units.(11) The performance results of these tests are shown in Fig. 16 along with reference line 1 previously established for the 1/2-Mw radiator units. The data indicate an improved performance over that of the 1/2-Mw units.

One of the difficulties encountered in testing the 1/2-Mw units was the elimination of bypass air around the radiator units. The necessity for avoiding restraints on the unit complicated the task of sealing the air duct. In addition, temperature traverses across the discharge air ducts indicated some degree of air flow and temperature asymmetry.

In the design of the test stand for the ART radiator units, careful attention was given to the radiator mounting and bypass air seals. Air temperature measurements were made with thermocouple grids and in general the radiator instrumentation was somewhat more extensive than for the smaller radiator units on the heat exchanger stands.

In order to obtain performance data on radiator units at mass velocities well above the capabilities of our equipment, a performance test on one of the 1/2-Mw radiator units was carried out for ORNL by the NASA Lewis Laboratory in Cleveland.(12) A best line representation of the NASA data (Fig. 17) can be compared with the data points from the ART radiator test. It is seen that the agreement in performance is satisfactory. The data from the above tests were plotted on a j factor vs Reynolds curve and are shown in Fig. 18. The characteristic shape of the j curve in the transition region is evident. Also shown

for comparison are data from one of the 1/2-Mw units used in establishing reference line 1.

Air pressure drop measurements across the radiator units were taken at cold isothermal conditions and again with the radiator under load. Figure 19 shows the pressure drop data taken under load on nine Y units in terms of inches of water per row corrected to a standard temperature of 60°F.(10)

A similar graph was made for the ART radiators (Fig. 20) and results are compared with previous data from the 1/2-Mw units.(11) The improved performance of the ART radiator units is reflected by somewhat higher air pressure drops. This is consistent with the thesis that air bypass took place in most of the 1/2-Mw radiator tests. The data shown have not been corrected for entrance and exit effects.

The effect on air pressure drop through the radiator of high-temperature operation of the radiator unit is shown in Fig. 21.(11) A detailed analysis to relate pressure drop to unit performance was not carried out.

Liquid-Side Pressure Drop

Attempts at representation and correlation of the NaK pressure drop through the radiator units are complicated by a number of factors. The NaK pressure drop through the radiator units is strongly affected by mass transfer of nickel from hot to cold sections of the Inconel system.(9) The degree of mass transfer occurring is a function of the maximum NaK temperature in the system, the temperature gradient in the system, the geometry of the system under consideration (including relative positions

of hot sections and cold sections), and the ratio of hot to cold areas in the system. Since these factors varied from test stand to test stand and from test to test, the accurate prediction of the pressure drop increase (i.e., the degree of mass transfer) would have necessitated an extensive program of study. In order to expedite the design the effects of mass transfer buildup were provided for by allowance in the reactor system design for gradual buildup in pressure drop in the ART radiator units. Figure 22 shows NaK pressure drop in terms of a modified friction factor vs time for ART test radiators 1 and 2.(11) Note the difference in the friction factor buildup curves. Both units were tested on the same stand under conditions which eliminate a number of the variables affecting mass transfer. In the case shown the difference in buildup characteristics was attributable to differences in the programming of steady-state and thermal cycling operation during the test program for the two radiator units.

The press of time during the ORNL-ANP effort was such as to preclude as comprehensive an analysis as desired on the heat transfer data beyond the then immediate needs of the program. The data collected are deserving of more attention. Nevertheless, the performance capabilities of molten salt-to-liquid metal heat exchangers were well established. A good correlation was established with which to predict molten salt heat transfer coefficients. Similarly, the performance capabilities of liquid metal-to-air radiators were defined and good progress was made towards understanding the design features necessary for high power density heat exchange equipment.

References

1. J. C. Amos, Small Fluoride-NaK Heat Exchanger Test No. 1 (High Velocity Heat Exchanger Test), ORNL-CF-56-1-187 (January 2, 1956).

2. S. Kaufmann and B Lubarsky, Review of Experimental Investigation of Liquid-Metal Heat Transfer, NACA TN 3336 (November 4, 1954).

3. S. I. Cohen, W. D. Powers, and N. D. Greene, A Physical Summary for ANP Fluoride Mixtures, ORNL-2150 (August 23, 1956).

4. J. C. Amos, et al., ANP Heat Exchanger Development, 1955-1957, ORNL-2439 (to be published).

5. J. L. Wantland, Thermal Characteristics of the ART Fuel-to-NaK Heat Exchanger, ORNL-CF-55-12-120 (December 22, 1955).

6. J. C. Amos, R. E. MacPherson, and R. L. Senn, Preliminary Report on Fused Salt Mixture No. 130 Heat Transfer Coefficient Test, ORNL-CF-58-4-23 (April 2, 1958).

7. M. H. Cooper, Pressure Drop of Heat Exchanger Tube Spacers, ORNL-CF-55-11-180 (November 28, 1955).

8. S. I. Cohen and T. N. Jones, Measurement of the Friction Characteristics for Flow in the ART Fuel-to-NaK Heat Exchanger, ORNL-CF-57-3-95 (March 19, 1957).

9. R. E. MacPherson, J. C. Amos, and H. W. Savage, Development Testing of Liquid Metal on Molten Salt Heat Exchangers, 1959 Winter Meeting, American Nuclear Society, November 4-6, 1959, Washington, D. C.

10. R. E. MacPherson, et al., ART Prototype Radiator, Development Program and Metallurgical Results, ORNL-2436 (to be published).

11. J. C. Amos and D. R. Ward, Performance and Endurance Tests of ART NaK-to-Air Test Radiators No. 1 and No. 2, ORNL-CF-58-1-2 (January 10, 1958).

12. Louis Gedeon, Experimental Investigation of a Compact Finned-Tube Heat Exchanger, NASA-M-4-30-59E.

Unclassified
ORNL-LR-Dwg. 42896

TABLE I

Radiator Oxidation and Fin-Tube Bonding Study

	O-1	O-3	P-2	C-1	Y-8	Y-9
Number of joint areas examined	4150	2282	3210	2718	2279	2608
Per cent of joint areas having 75-100% adherence	91.8	87.7	100	91.6	24	44.6
Per cent of joint areas having 50-74% adherence	4.2	3.5		2.9	8	21.2
Per cent of joint areas having 25-49% adherence	1.4	1.4		0.5	5	9.4
Per cent of joint areas having 0-24% adherence	2.6	7.4		5.0	63	24.8
Per cent of joint areas having non-oxidized copper fins	59.3	12.1	100	81.3	12	23.5
Per cent of joint areas having slightly oxidized copper fins	20.1	2.5		4.0	45	8.5
Per cent of joint areas having heavily oxidized copper fins	20.6	85.4		14.7	43	68.0
Number of hours of 1000-1600°F service	608	716	1199	2045	434	1283

Unclassified
ORNL-LR-Dwg. 42897

TABLE I (continued)

Radiator Oxidation and Fin-Tube Bonding Study

	C-2	Y-1	Y-3	Y-4	Y-5	Y-7
Number of joint areas examined	2664	3847	2684	2757	3105	2783
Per cent of joint areas having 75-100% adherence	92.9	67.4	90.4	60.7	38.4	57
Per cent of joint areas having 50-74% adherence	4.6	13.0	5.9	18.8	9.6	7
Per cent of joint areas having 25-49% adherence	0.5	7.3	1.1	5.5	7.0	4
Per cent of joint areas having 0-24% adherence	2.0	12.3	2.6	15.0	45	32
Per cent of joint areas having non-oxidized copper fins	37.0	75.4	84.5	61.9	29	17
Per cent of joint areas having slightly oxidized copper fins	5.3	22.0	7.5	19.5	13.6	7
Per cent of joint areas having heavily oxidized copper fins	57.7	2.6	8.0	18.6	57.4	76
Number of hours of 1000-1600°F service	2045	152	361	1356	1265	2569

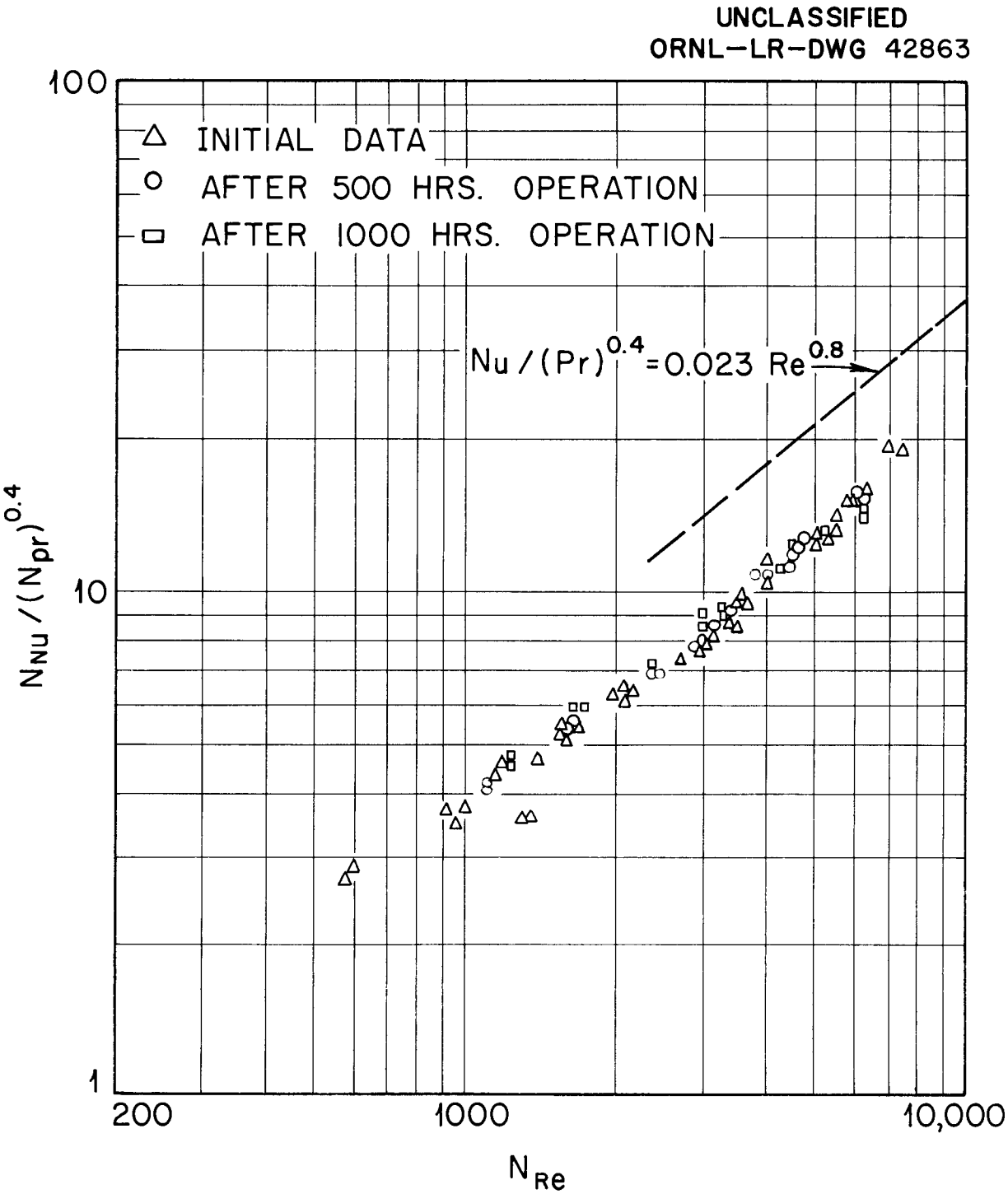

HEAT TRANSFER CHARACTERISTICS FOR FLUORIDE HEAT EXCHANGER SHE-1.

FIGURE 1

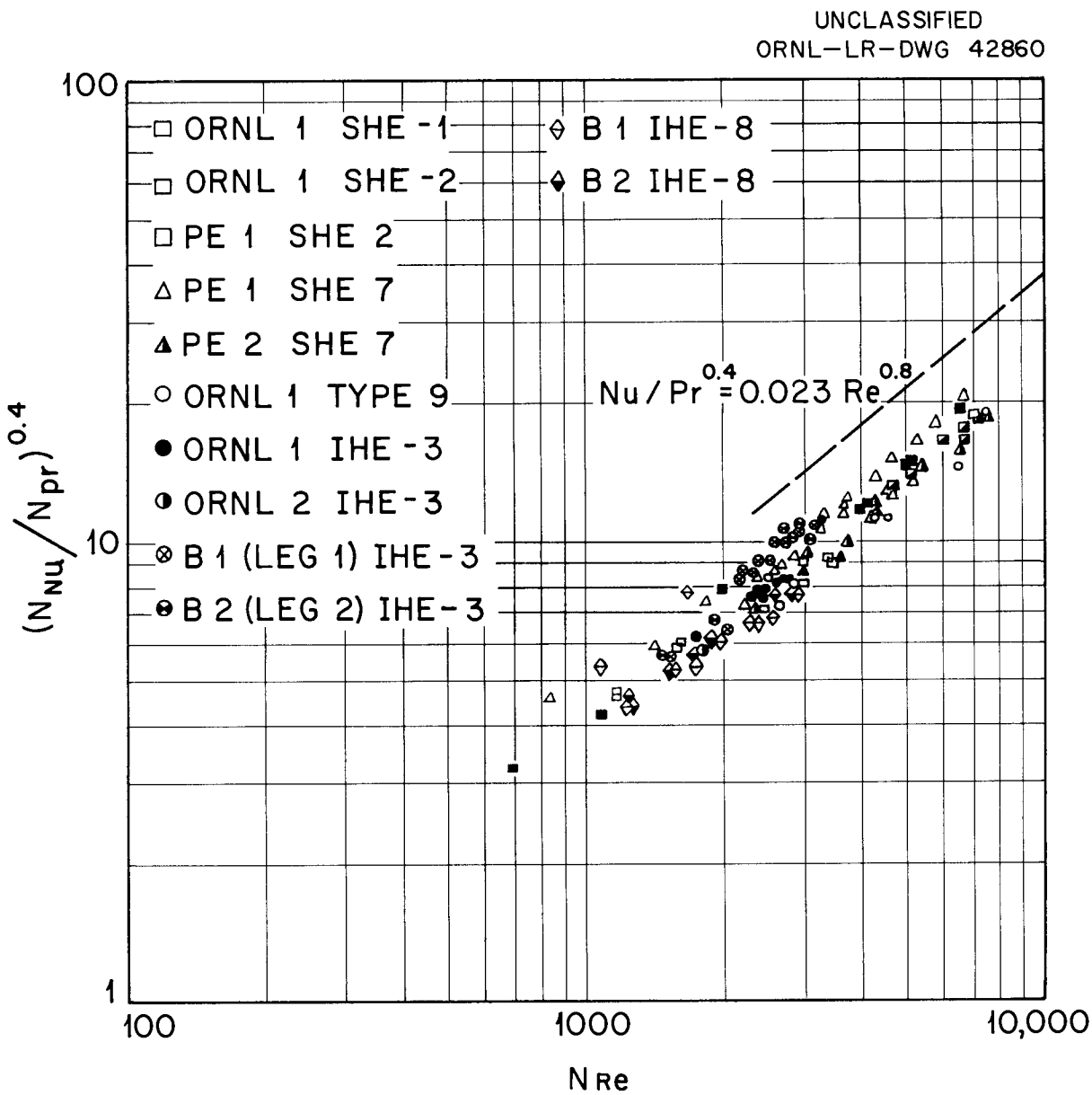

HEAT TRANSFER CHARACTERISTICS FOR 12 FLUORIDE HEAT EXCHANGERS.

FIGURE 2

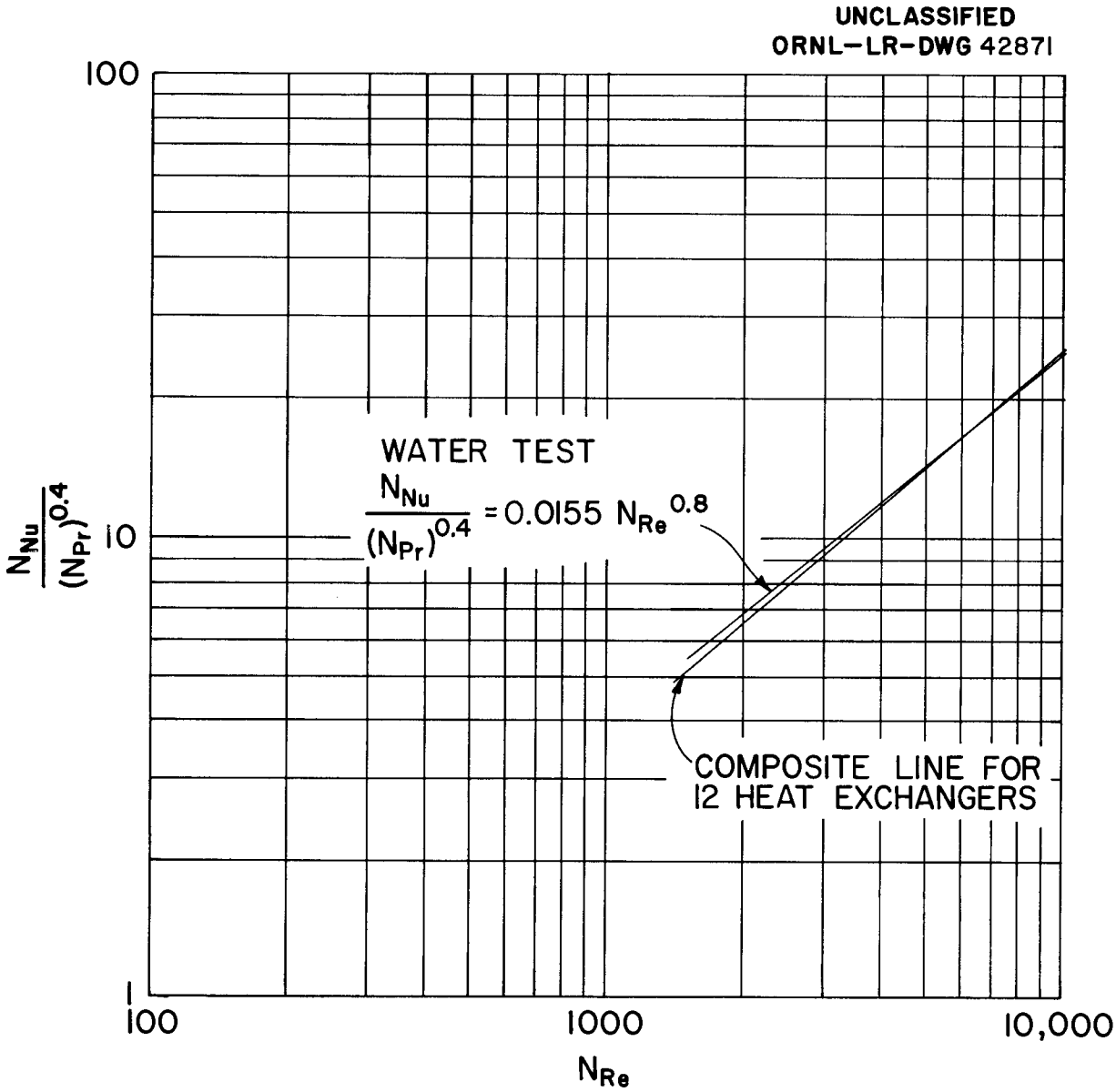

HEAT TRANSFER CHARACTERISTICS FOR
EXTERNAL TUBE FLOW WITH WATER

FIGURE 3

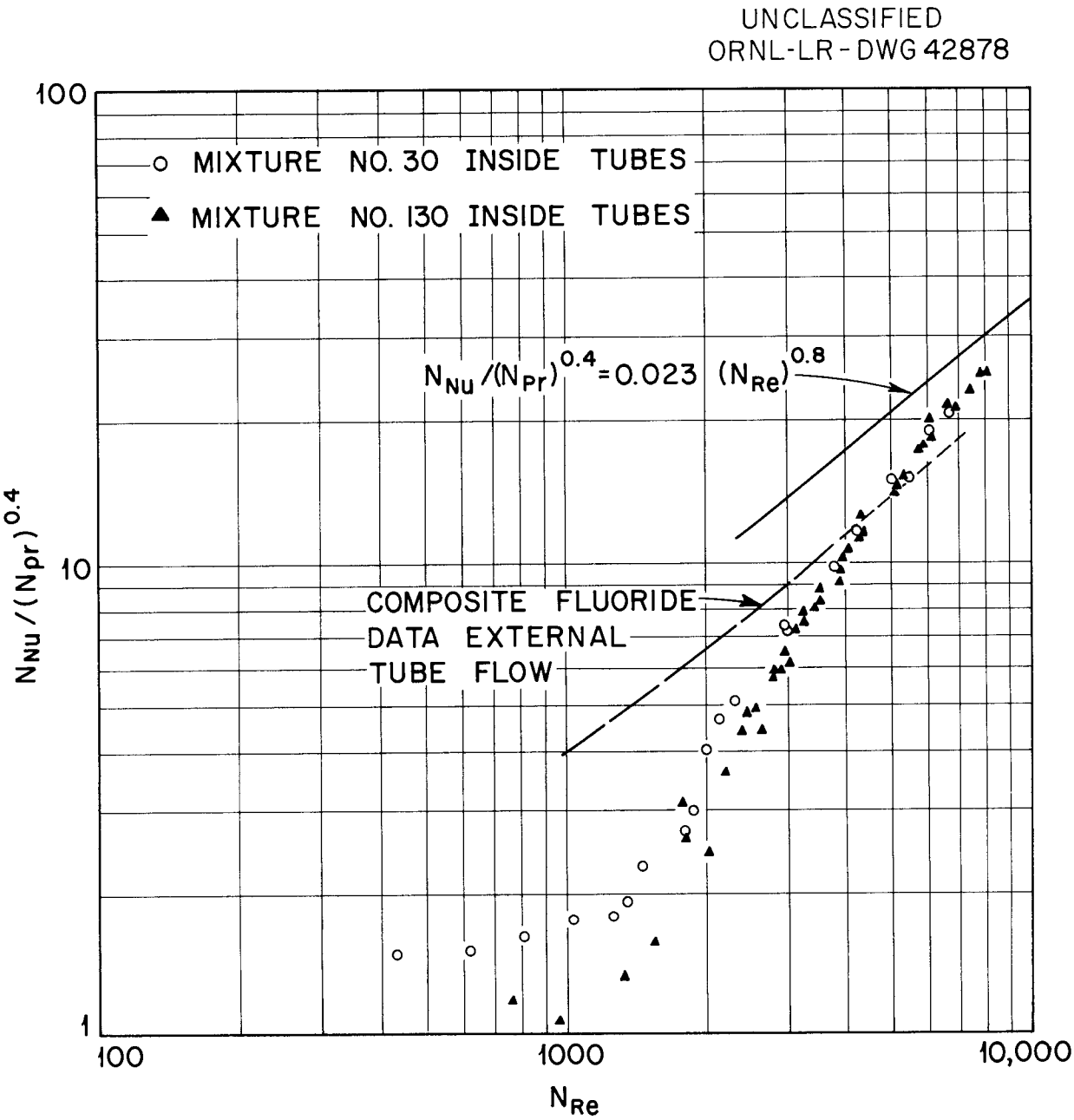

HEAT TRANSFER CHARACTERISTICS FOR FLUORIDE FLOWING THROUGH SMALL TUBES.

FIGURE 4

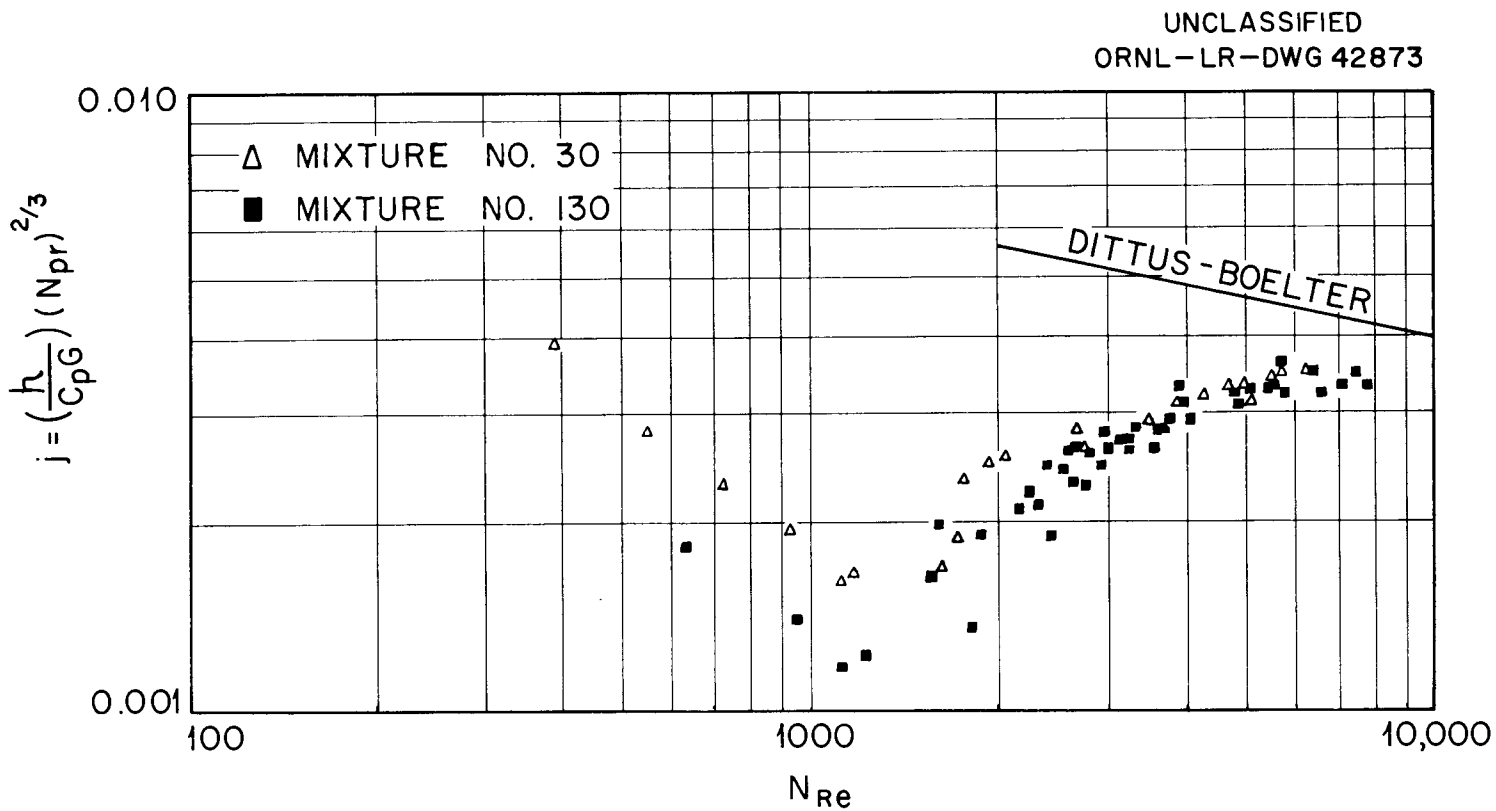

COLBURN j - FACTOR GRAPH FOR FLUORIDE FLOWING THRU SMALL TUBES

FIGURE 5

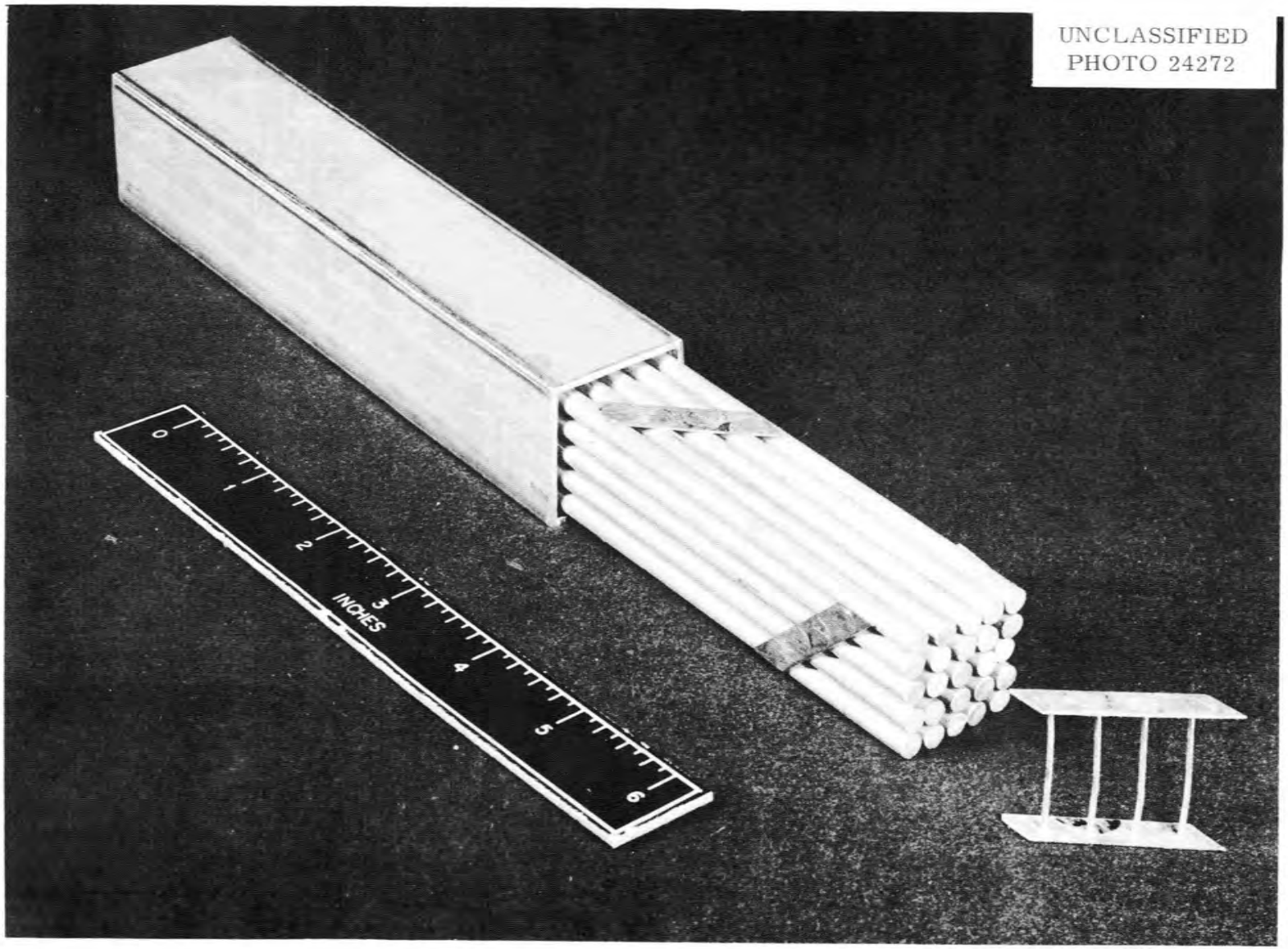

Fig. 6 Typical Spacer Comb - 25Tube Bundle

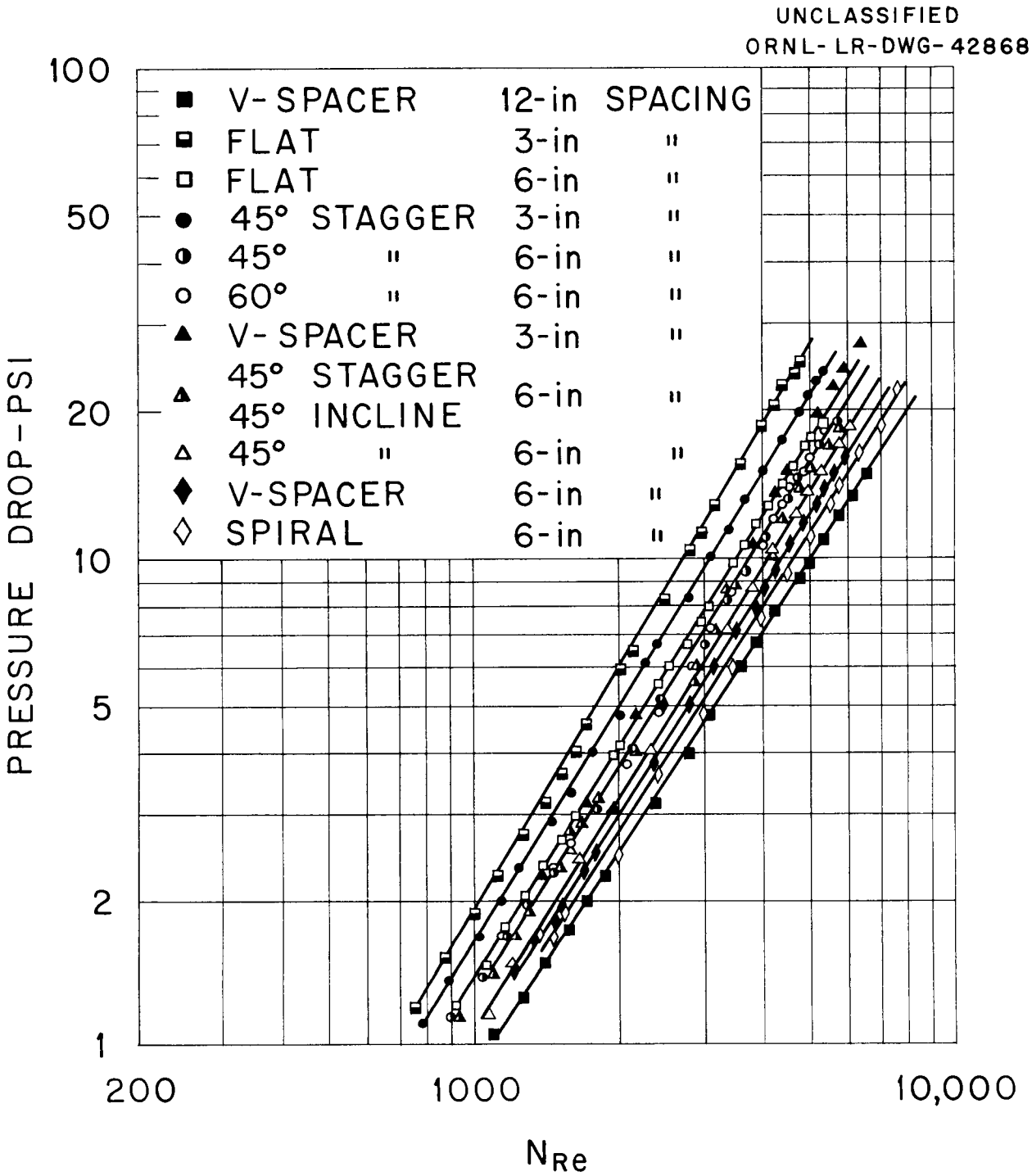

PRESSURE DROP VALUES FOR A NUMBER OF SPACER CONFIGURATIONS

FIGURE 7

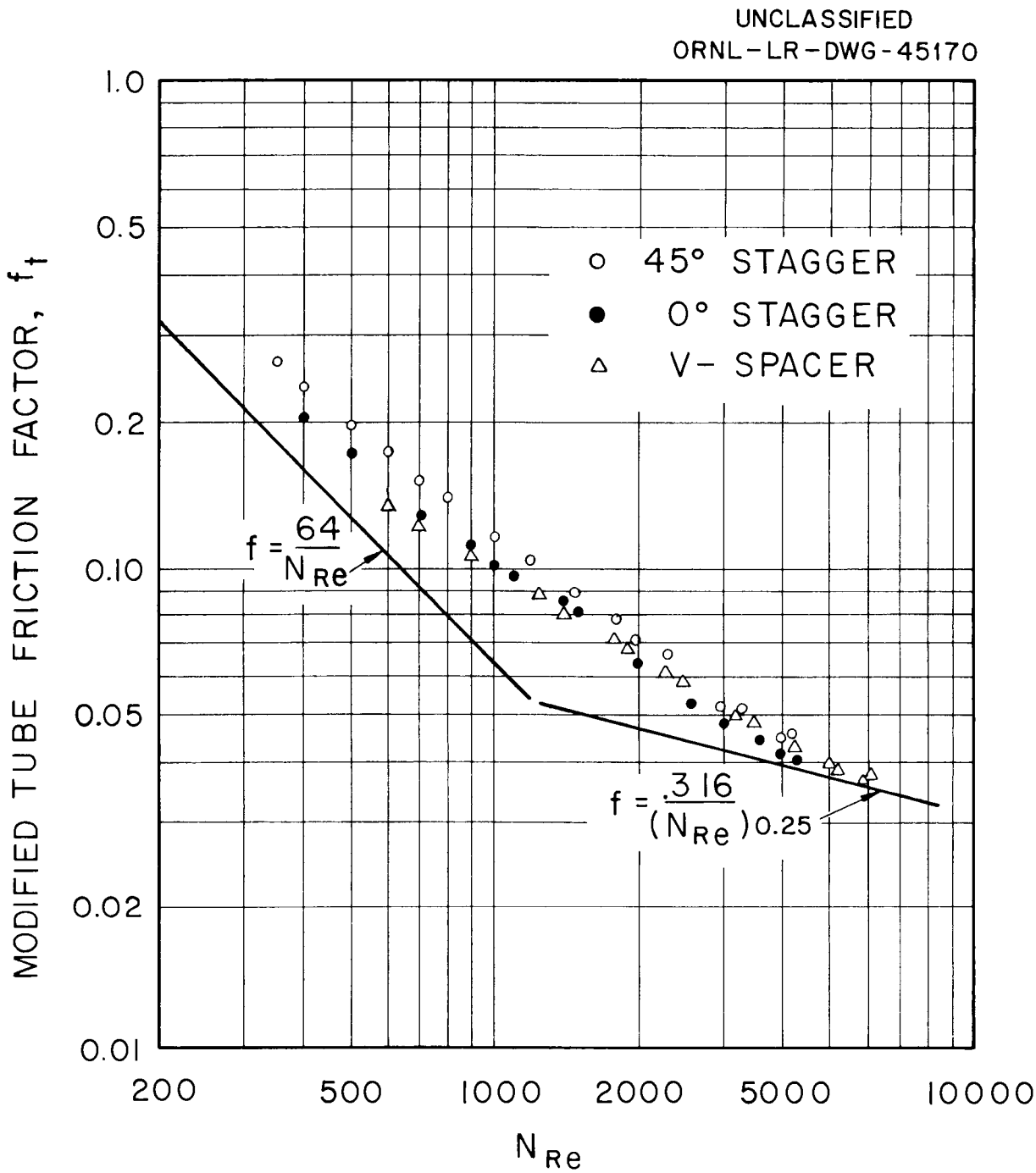

APPARENT TUBE FRICTION FACTOR
FOR EXTERNAL TUBE FLOW IN 25 TUBE BUNDLE

FIGURE 8

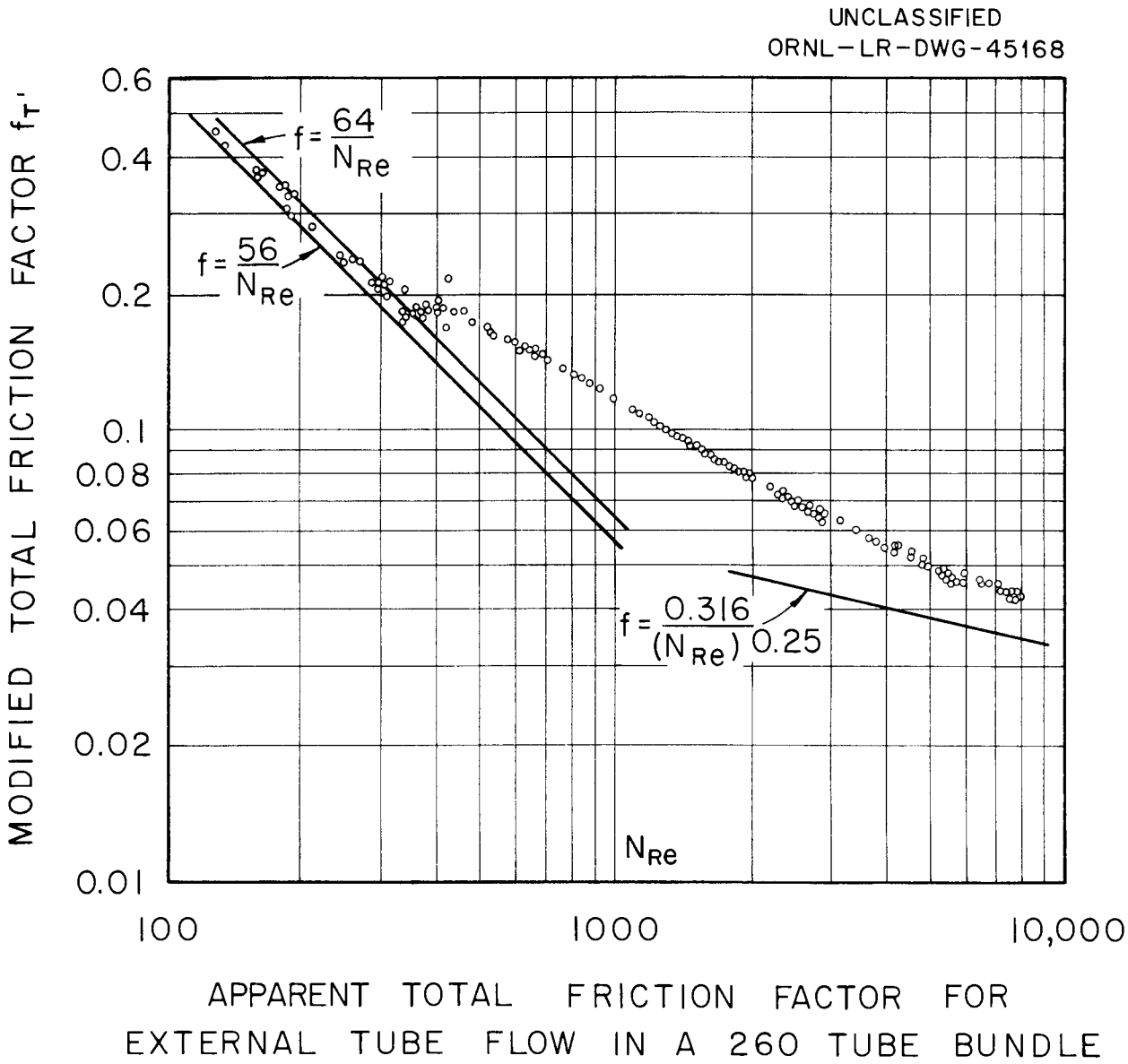
UNCLASSIFIED
ORNL-LR-DWG-45168
MODIFIED TOTAL FRICTION FACTOR f_T'
0.6
0.4
0.2
0.1
0.08
0.06
0.04
0.02
0.01
$f = \frac{64}{N_{Re}}$
$f = \frac{56}{N_{Re}}$
$f = \frac{0.316}{(N_{Re})^{0.25}}$
N_{Re}
100
1000
10,000
APPARENT TOTAL FRICTION FACTOR FOR
EXTERNAL TUBE FLOW IN A 260 TUBE BUNDLE

FIGURE 9

UNCLASSIFIED
ORNL-LR-DWG-45169

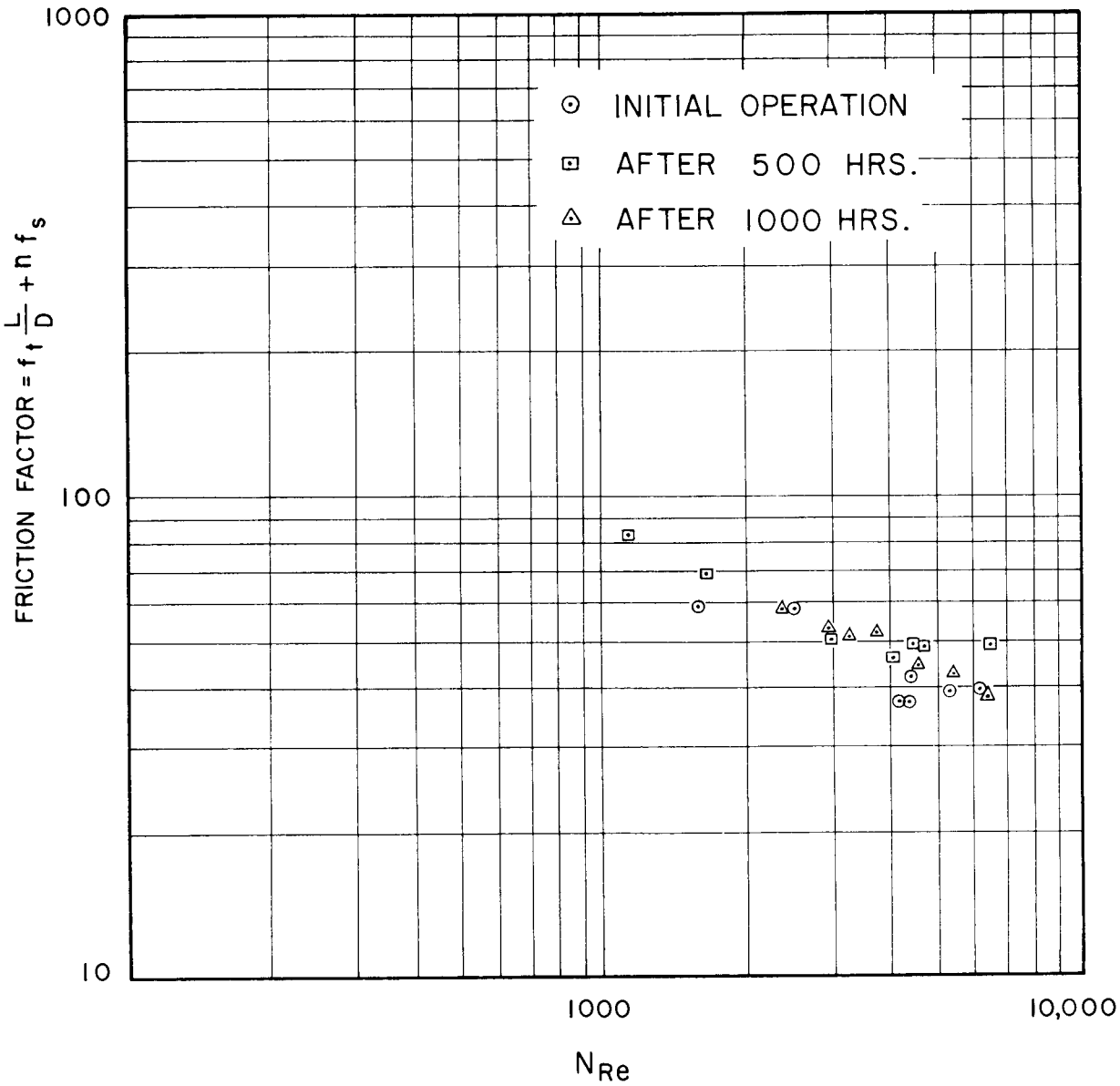

MOLTEN SALT PRESSURE DROP FOR 20 TUBE HEAT EXCHANGER
SHE-1 ORNL-1

FIGURE 10

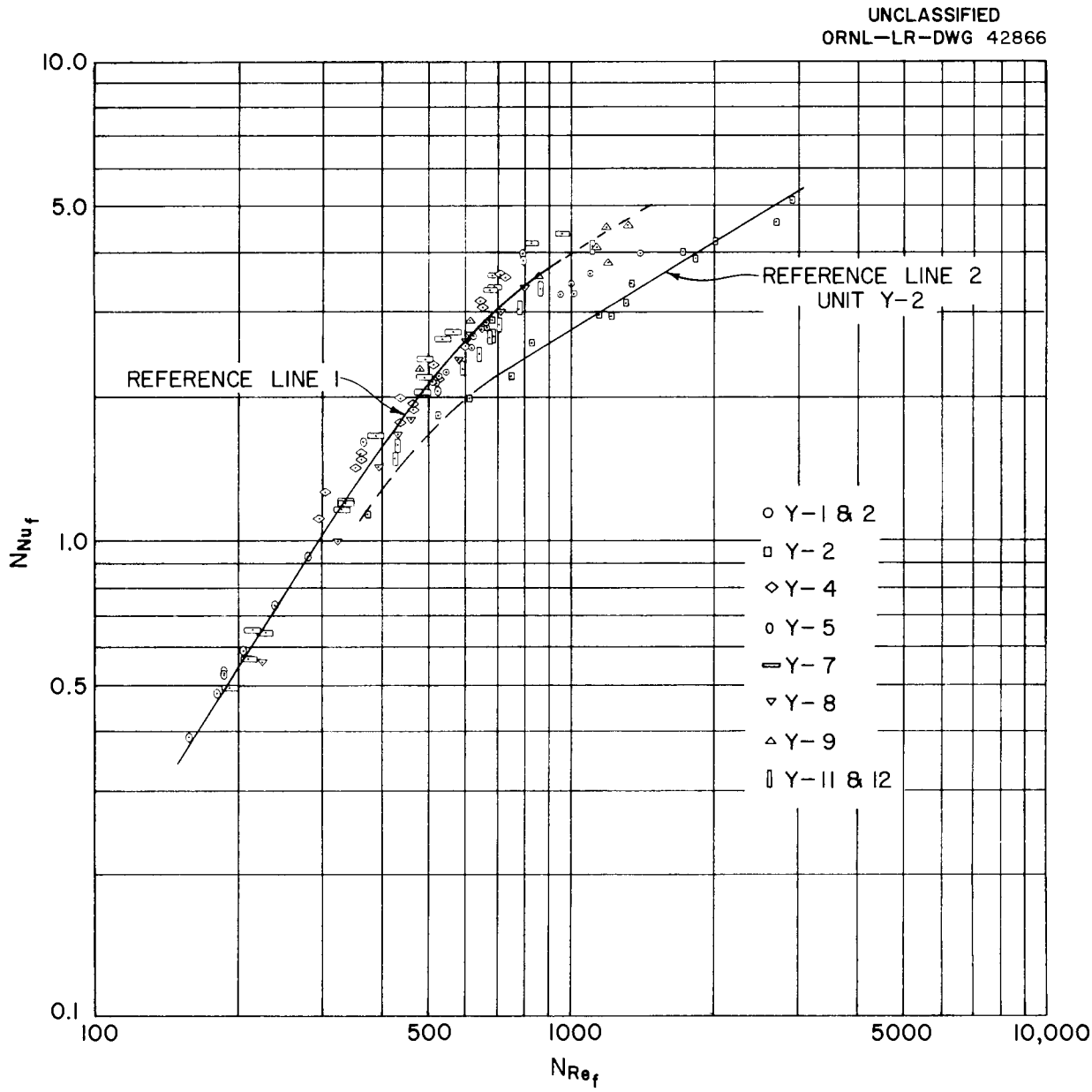

RADIATOR PERFORMANCE FOR TEN 1/2-MW Y-UNITS

FIGURE 11

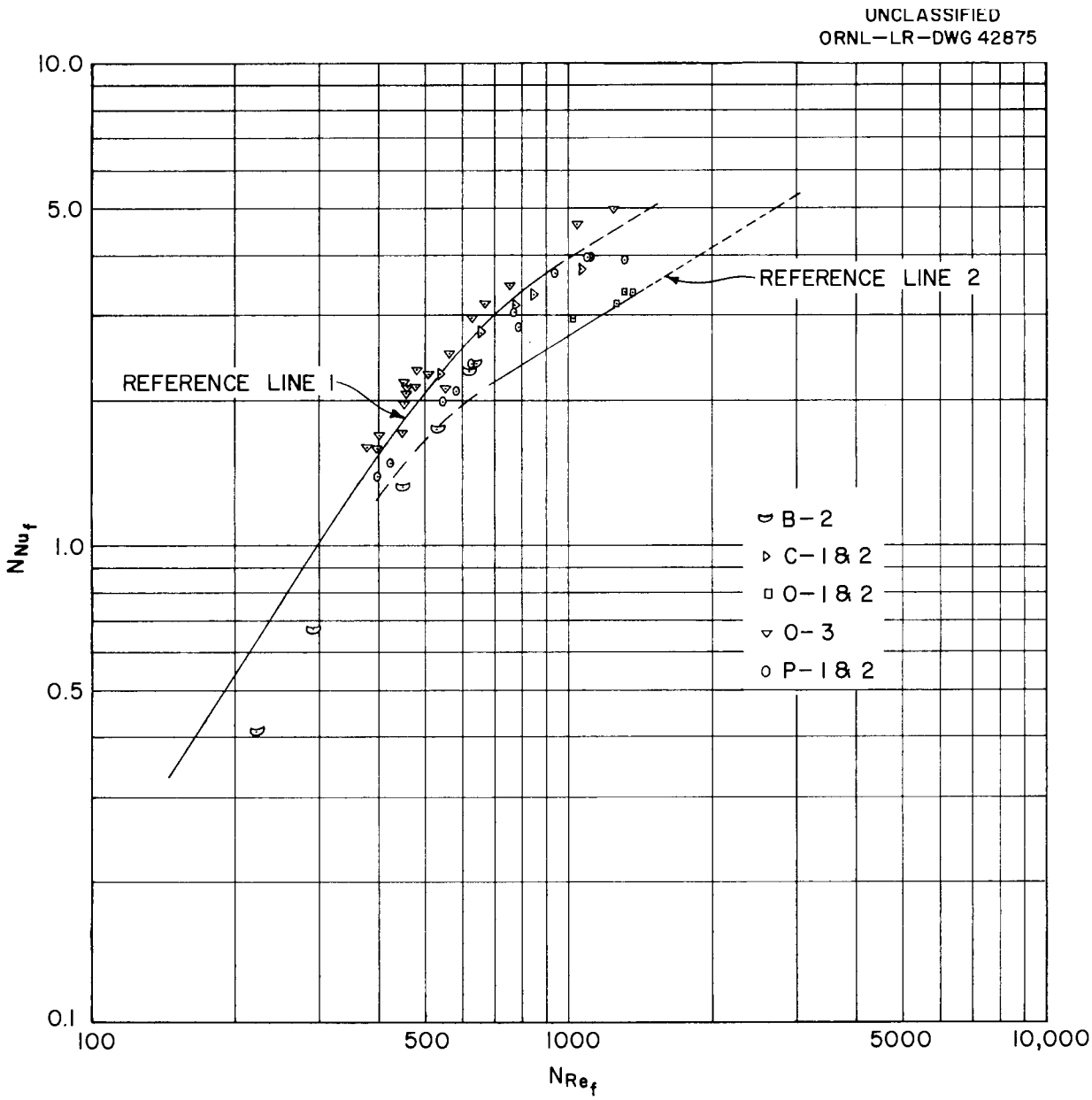

RADIATOR PERFORMANCE FOR EIGHT 1/2-MW UNITS

FIGURE 12

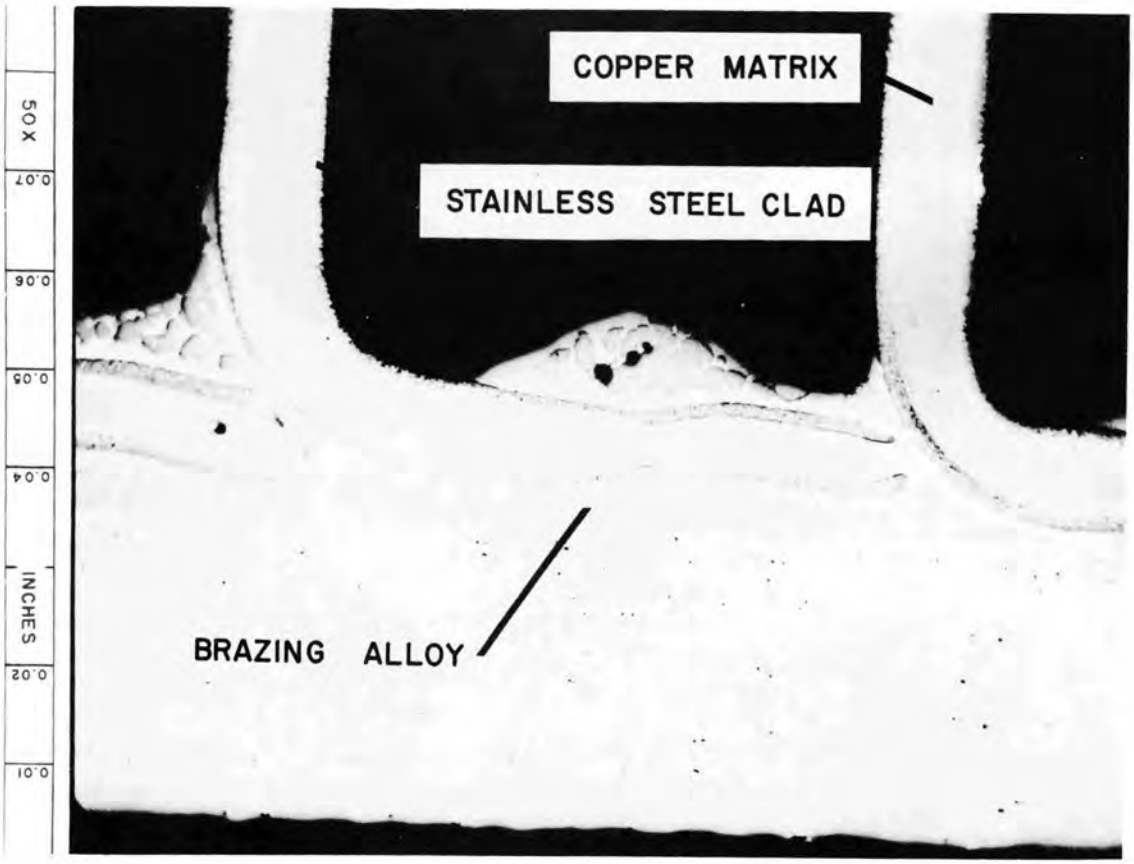

Fig. 13 Good Fin-to-Tube Bond

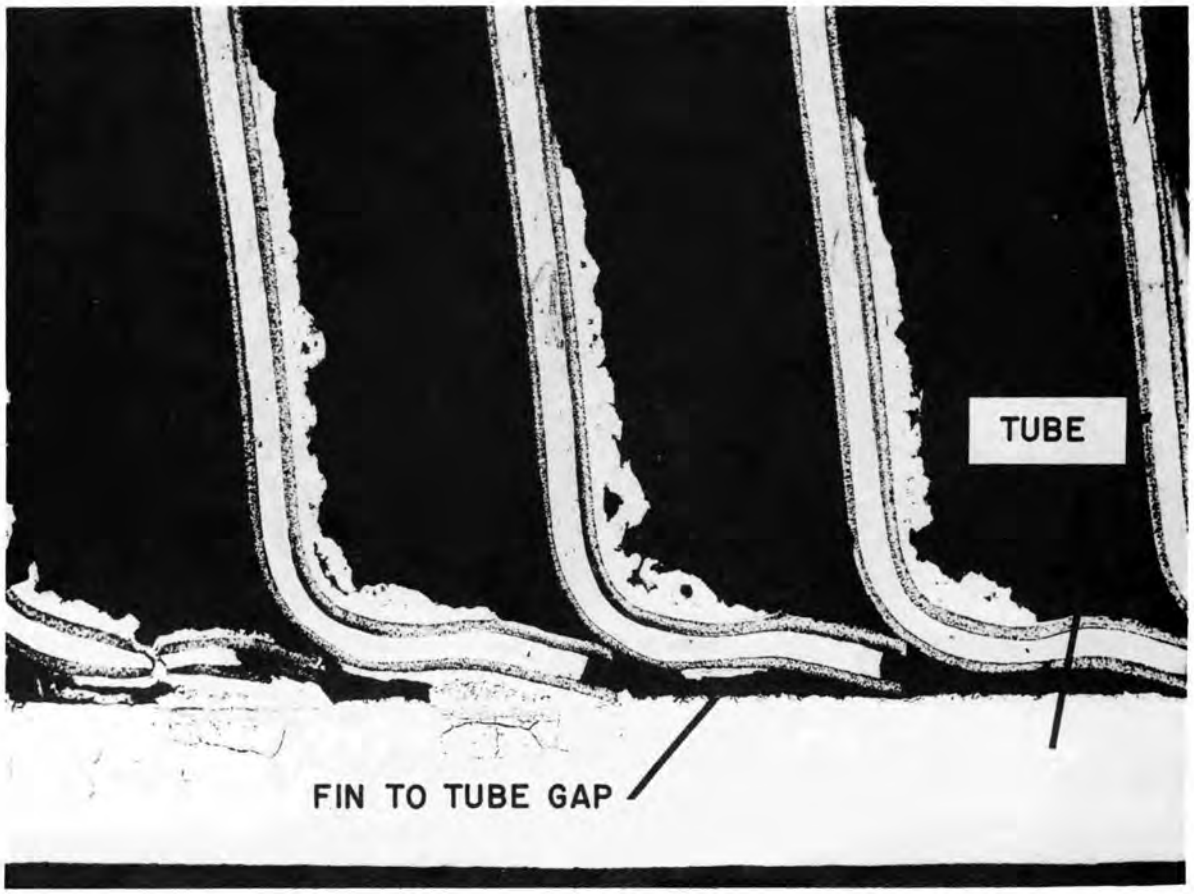

Fig. 14 Poor Fin-to-Tube Bond

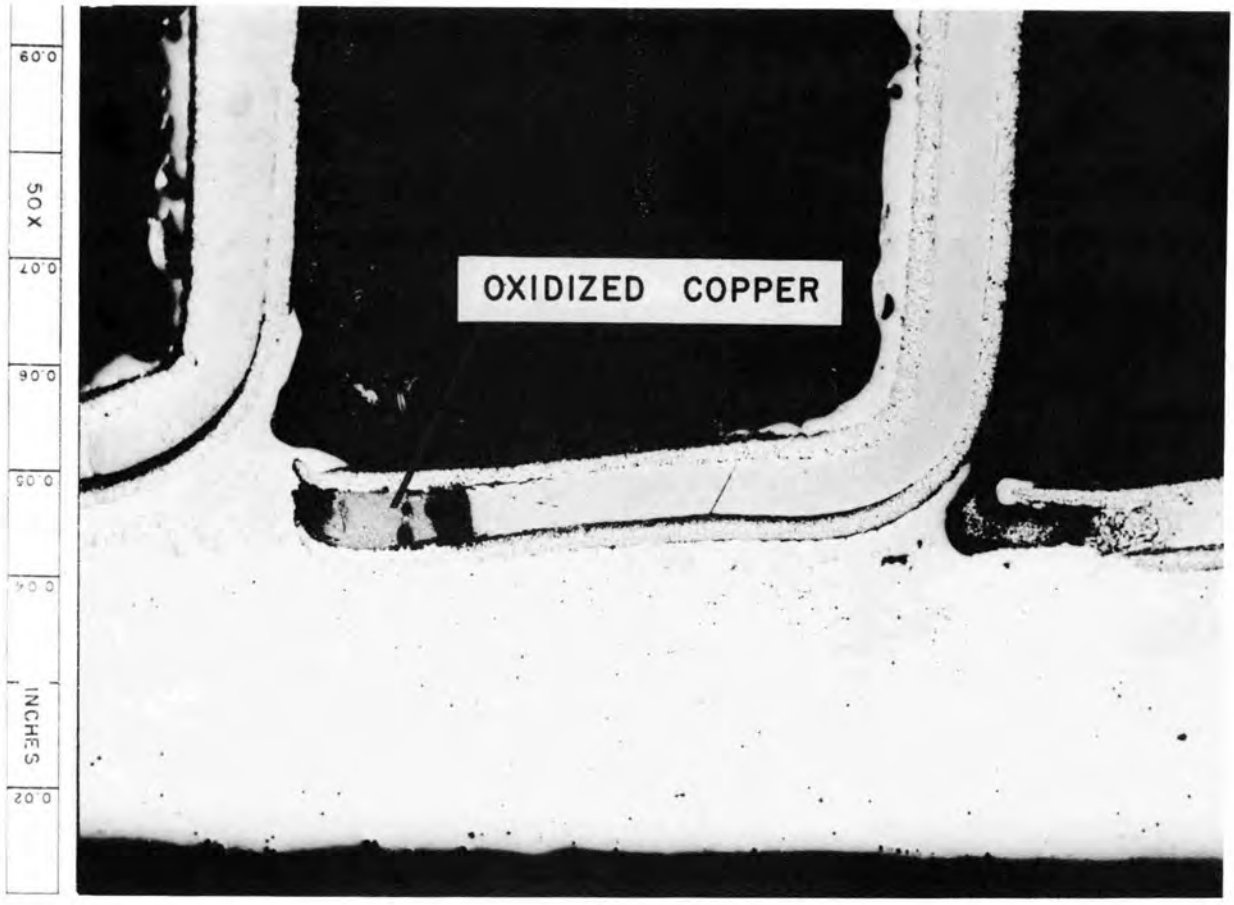

Fig. 15 Fin Oxidation

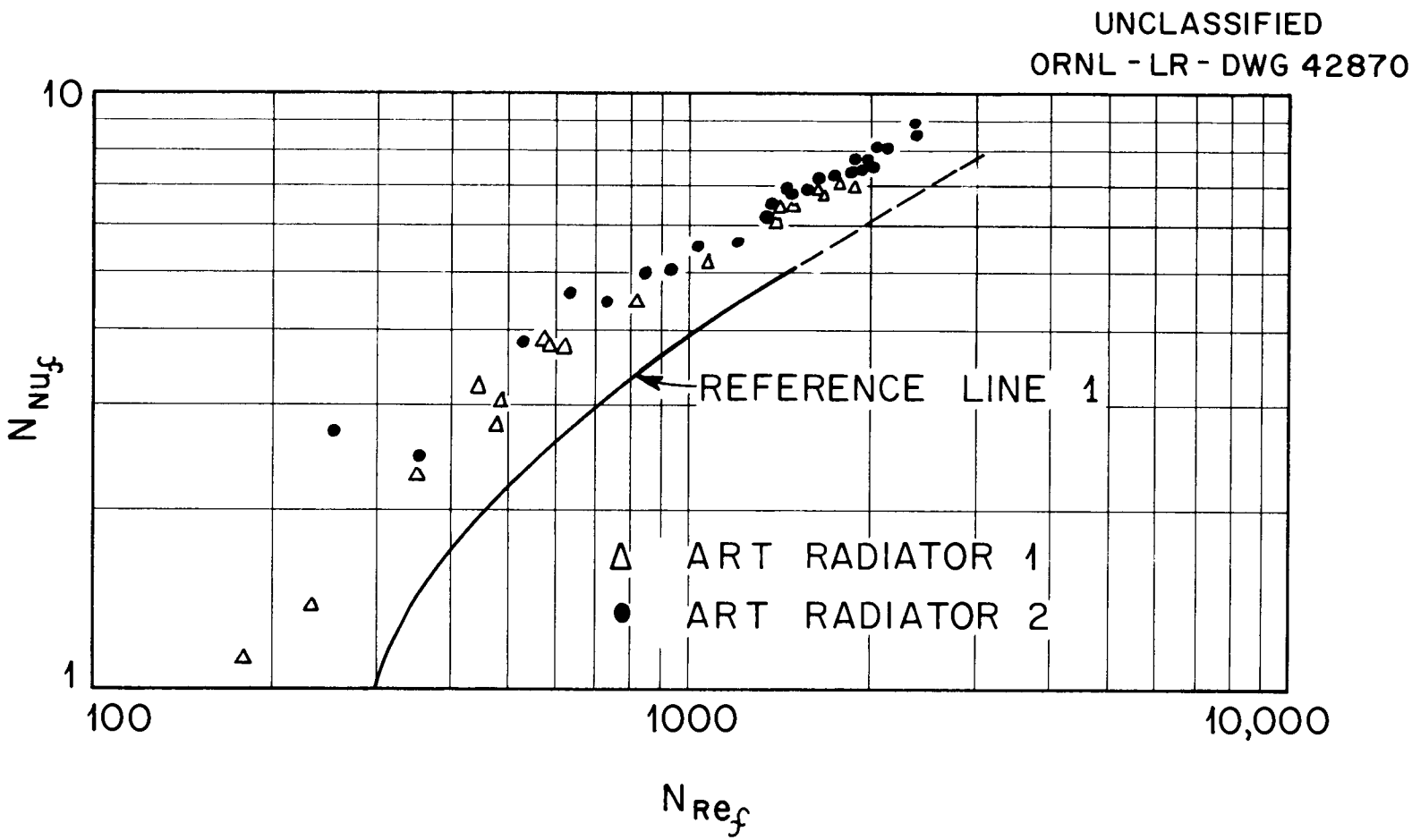

HEAT TRANSFER COMPOSITE DATA FOR ART RADIATOR TEST UNITS NO. 1 & 2.

FIGURE 16

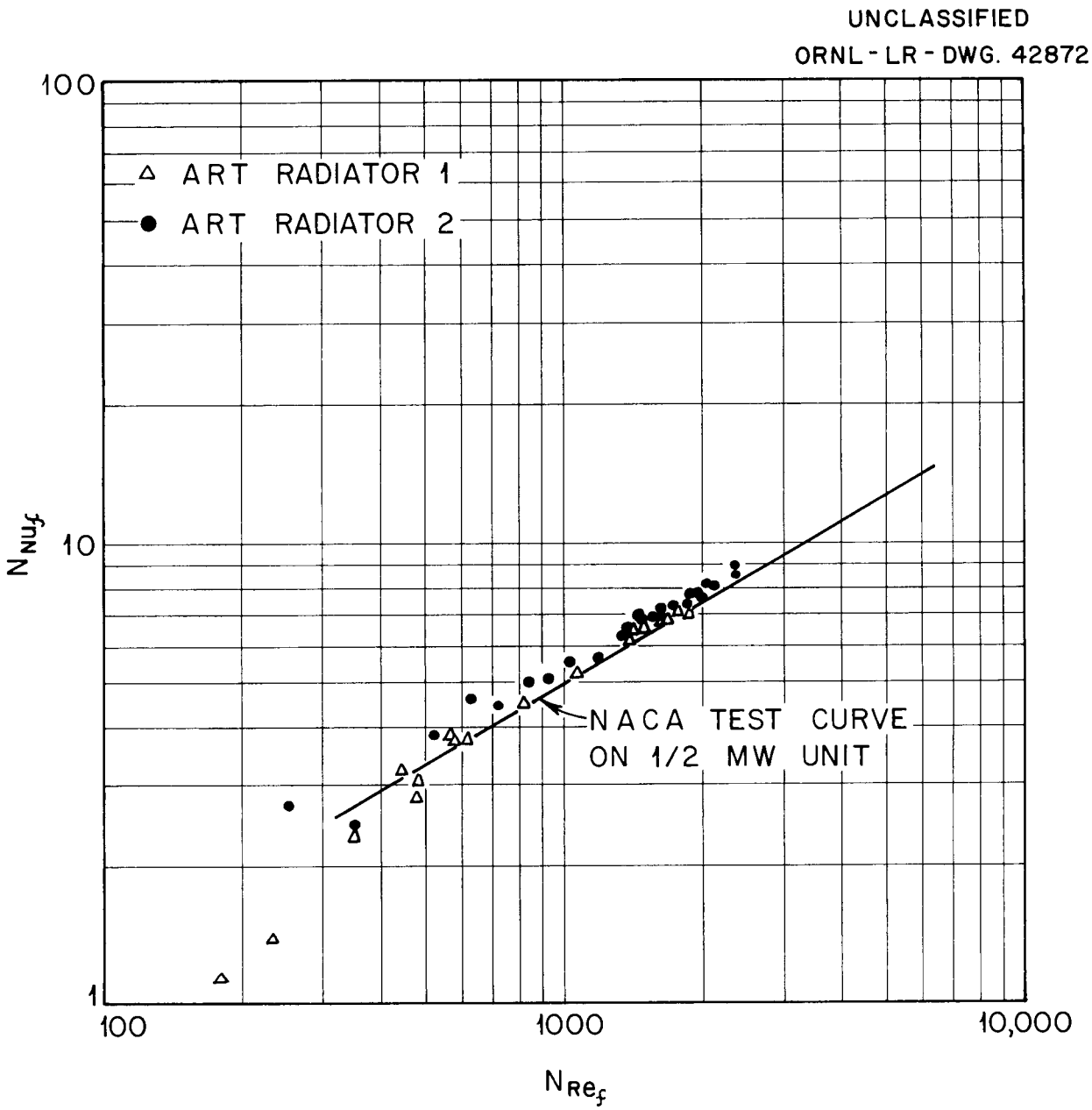

COMPARATIVE PERFORMANCE OF 1/2 MW AND ART RADIATOR TEST UNITS.

FIGURE 17

UNCLASSIFIED
ORNL-LR-DWG-45167

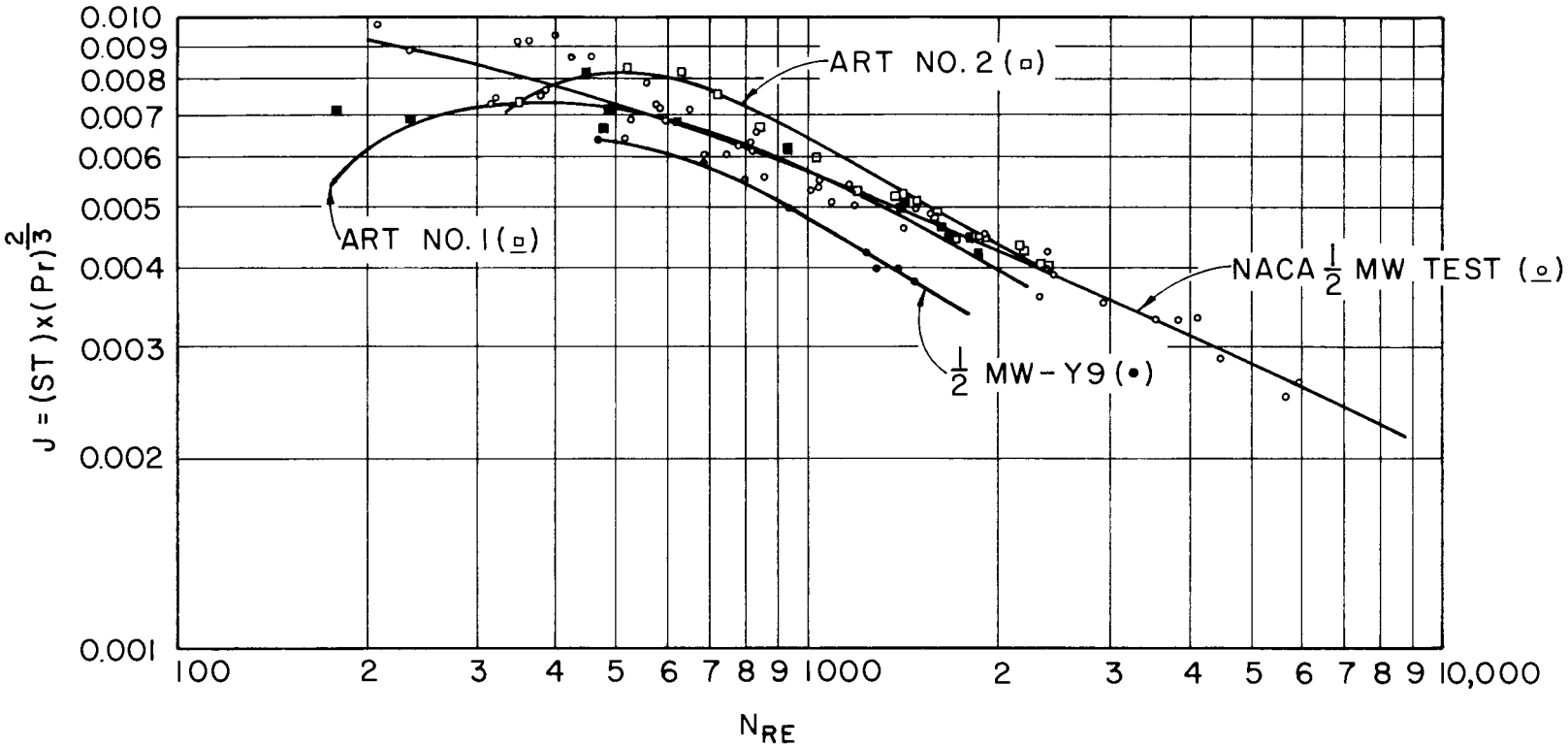

COMPARATIVE PERFORMANCE OF ART RADIATOR UNITS WITH $\frac{1}{2}$ MW UNITS ON J FACTOR

FIGURE 18

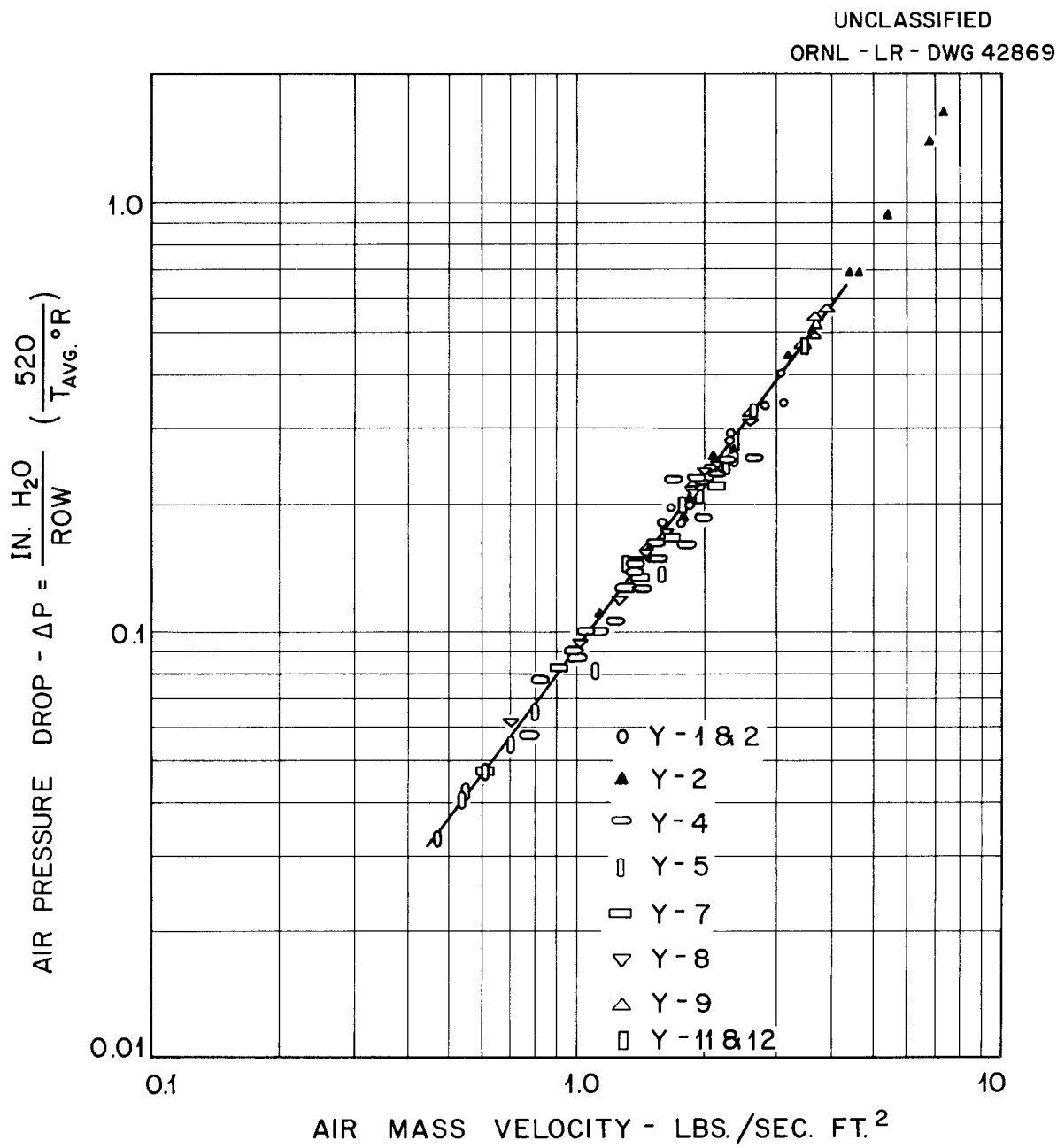

AIR PRESSURE DROP FOR NINE 1/2 MW-Y UNITS

FIGURE 19

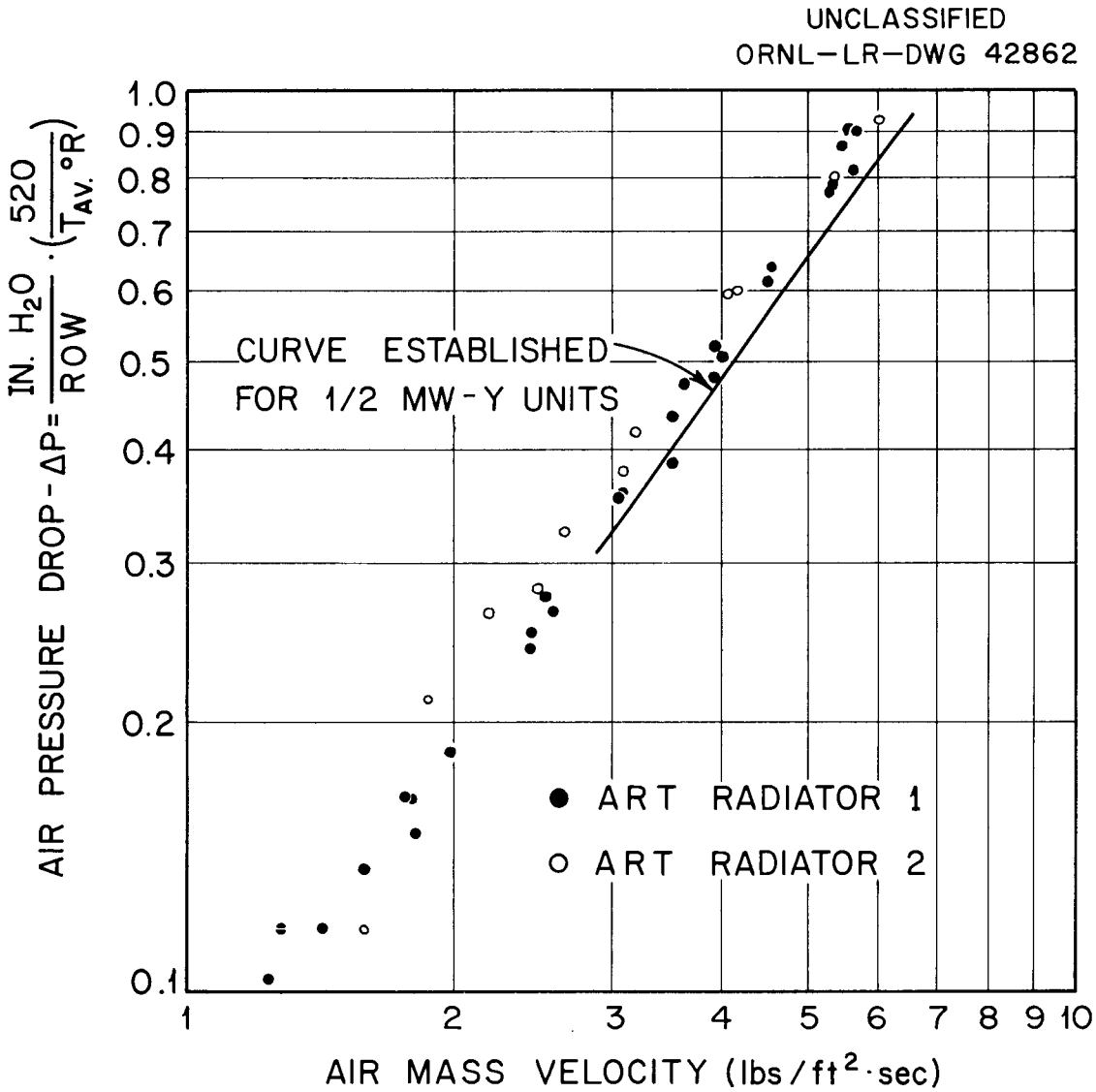

HOT AIR PRESSURE DROP FOR ART TEST RADIATORS 1&2

FIGURE 20

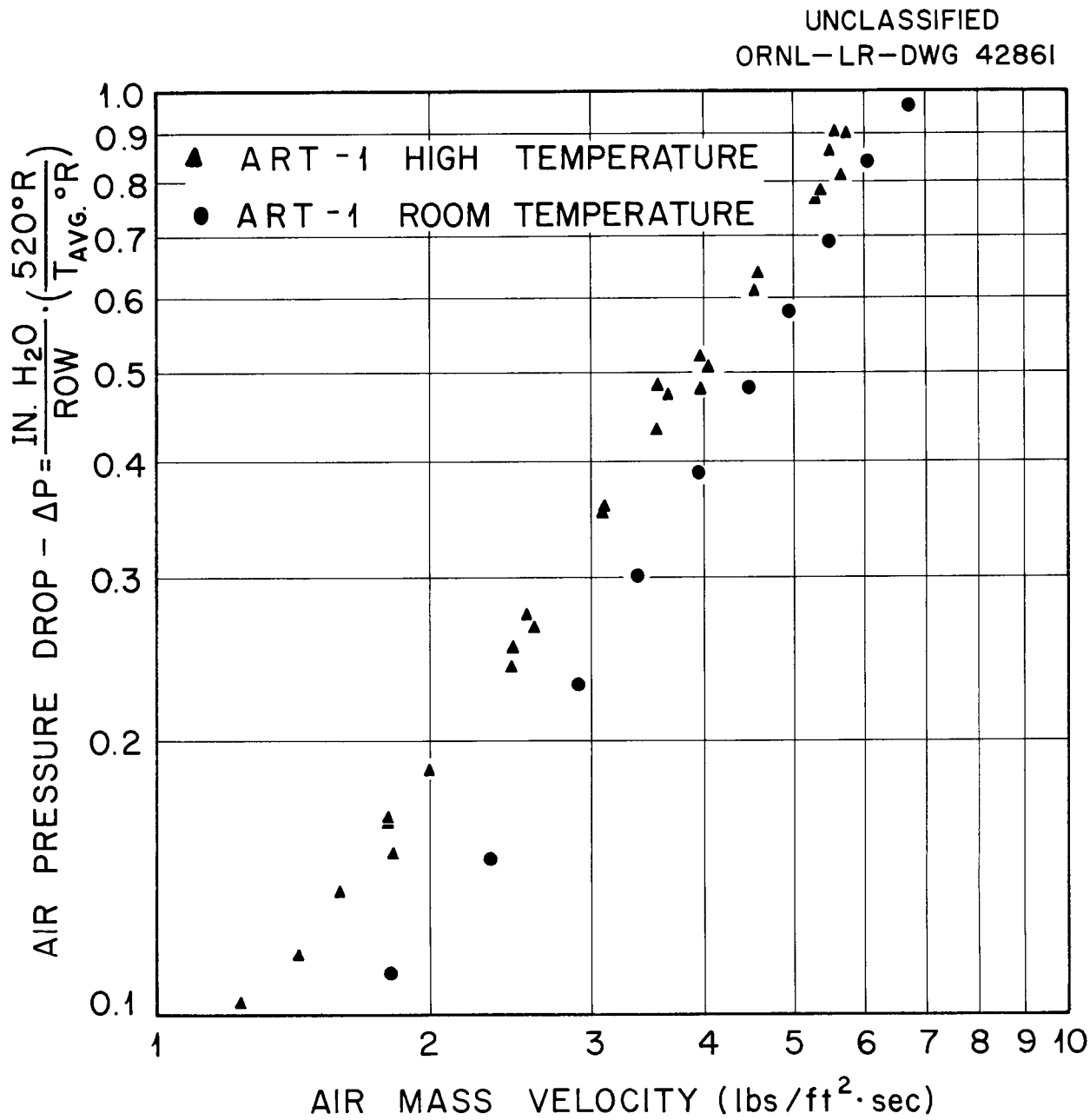

AIR PRESSURE FOR ART TEST RADIATOR 1

FIGURE 21

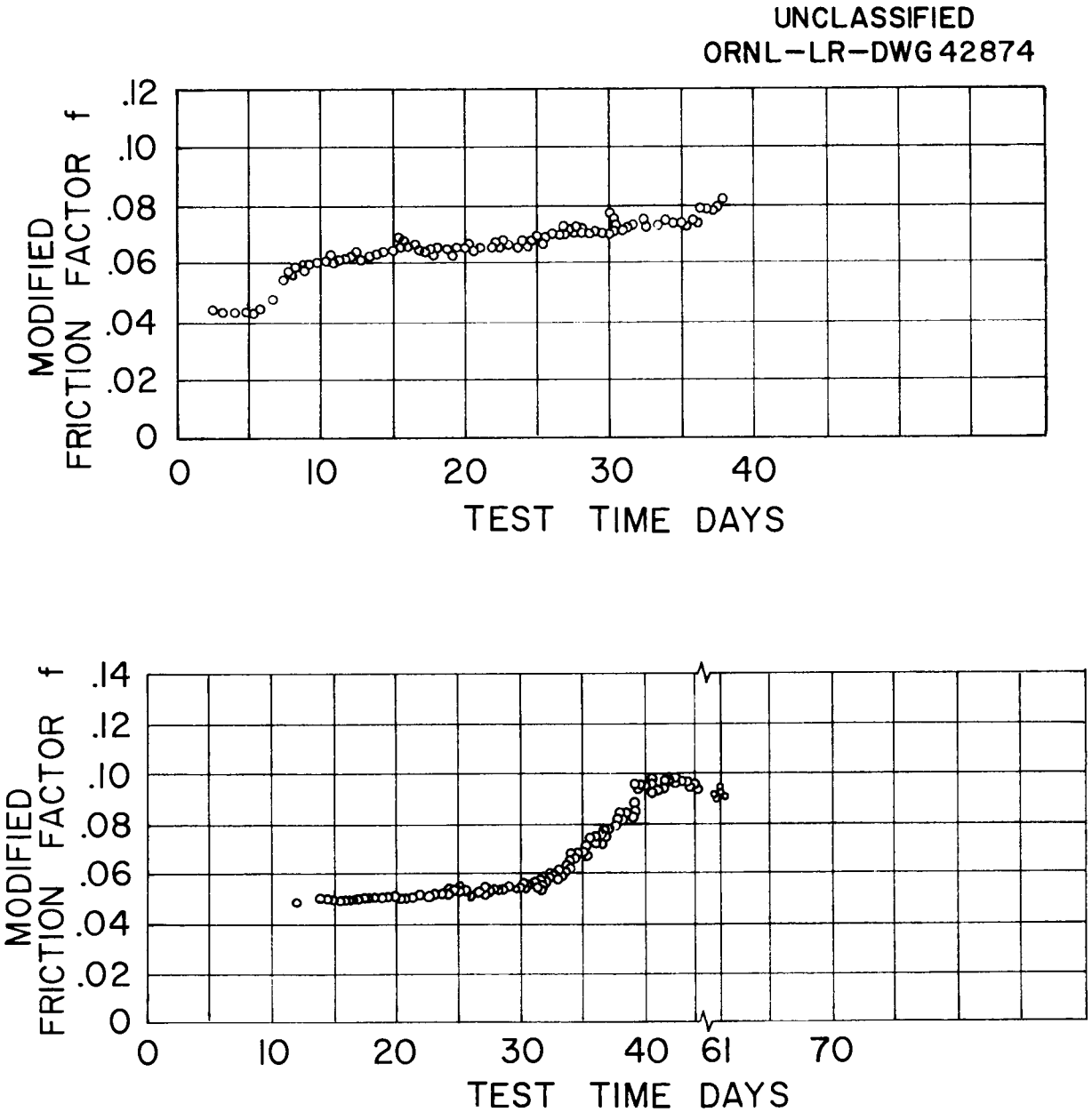

NAK PRESSURE DROP BUILDUP IN ART RADIATORS

FIGURE 22

Distribution

1. J. C. Amos
2. A. L. Boch
3. R. A. Charpie
4. J. H. DeVan
5. M. H. Fontana
6. J. Foster
7. A. P. Fraas
8. R. J. Gray
9. P. G. Lafyatis
10.-19. R. E. MacPherson
20. W. D. Manly
21. W. B. McDonald
22. H. W. Savage
23. R. L. Senn
24. G. M. Slaughter
25. A. Taboada
26. D. B. Trauger
27.-36. M. M. Yarosh
37.-38. Central Research Library
39. Document Reference Section
40. M. J. Skinner
41.-52. Laboratory Records
53. ORNL-RC
54.-68. TISE