MARTIN MARIETTA ENERGY SYSTEMS LIBRARIES
3 4456 0050080 2

CENTRAL RESEARCH LIBRARY
DOCUMENT COLLECTION

ORNL-3192
UC-70 – Waste Disposal and Processing
TID-4500 (16th ed.)

EVALUATION OF ULTIMATE DISPOSAL METHODS FOR LIQUID AND SOLID RADIOACTIVE WASTES PART II. CONVERSION TO SOLID BY POT CALCINATION

J. J. Perona
R. L. Bradshaw
J. T. Roberts
J. O. Blomeke

OAK RIDGE NATIONAL LABORATORY
operated by
UNION CARBIDE CORPORATION
for the
U.S. ATOMIC ENERGY COMMISSION

CENTRAL RESEARCH LIBRARY
DOCUMENT COLLECTION
LIBRARY LOAN COPY
DO NOT TRANSFER TO ANOTHER PERSON
If you wish someone else to see this document, send in name with document and the library will arrange a loan.

Printed in USA. Price $1.00. Available from the

Office of Technical Services
Department of Commerce
Washington 25, D.C.

LEGAL NOTICE

This report was prepared as an account of Government sponsored work. Neither the United States, nor the Commission, nor any person acting on behalf of the Commission:

A. Makes any warranty or representation, expressed or implied, with respect to the accuracy, completeness, or usefulness of the information contained in this report, or that the use of any information, apparatus, method, or process disclosed in this report may not infringe privately owned rights; or

B. Assumes any liabilities with respect to the use of, or for damages resulting from the use of any information, apparatus, method, or process disclosed in this report.

As used in the above, "person acting on behalf of the Commission" includes any employee or contractor of the Commission, or employee of such contractor, to the extent that such employee or contractor of the Commission, or employee of such contractor prepares, disseminates, or provides access to, any information pursuant to his employment or contract with the Commission, or his employment with such contractor.

ORNL-3192

Contract No. W-7405-eng-26

CHEMICAL TECHNOLOGY DIVISION

EVALUATION OF ULTIMATE DISPOSAL METHODS FOR LIQUID AND SOLID RADIOACTIVE WASTES
PART II. CONVERSION TO SOLID BY POT CALCINATION

J. J. Perona
R. L. Bradshaw
J. T. Roberts
J. O. Blomeke

DATE ISSUED

SEP 27 1961

OAK RIDGE NATIONAL LABORATORY
Oak Ridge, Tennessee
operated by
UNION CARBIDE CORPORATION
for the
U.S. ATOMIC ENERGY COMMISSION

MARTIN MARIETTA ENERGY SYSTEMS LIBRARIES
3 4456 0050080 2

ABSTRACT

As the second part of a study to evaluate from the standpoint of economics and hazards the various steps leading to and including the permanent disposal of highly radioactive liquid and solid wastes, the costs of pot calcination of Purex and Thorex wastes were calculated. The wastes were assumed produced by a plant processing 1500 tonnes/year of uranium converter fuel at a burnup of 10,000 Mwd/tonne and 270 tonnes/year of thorium converter fuel at 20,000 Mwd/tonne. Costs were calculated for processing Purex waste in acidic and reacidified forms and for processing Thorex wastes in acidic and reacidified forms and with constituents added for producing an acidic Thorex glass.

Calcination vessel designs were right circular cylinders similar to those used in engineering development studies. Costs were calculated for processing in 6-, 12-, and 24-in.-dia vessels with a fixed length of 10 ft. Vessel costs used, based on estimates from private industry, were $500, $855, and $2515 each for the three sizes.

Costs were calculated for wastes decayed 120 days and 1, 3, 10, and 30 years after reactor discharge prior to calcination. Aging had negligible effect on costs, except as it permitted larger diameter vessels to be used, because vessel and operating costs were much larger than capital costs in all cases.

The lowest cost was 0.87×10^{-2} mill/kwh$_e$ for processing acidic Purex and Thorex wastes in 24-in.-dia vessels, and the highest was 5.0×10^{-2} mill/kwh$_e$ for processing reacidified Purex and Thorex wastes in 6-in.-dia vessels. About 7 years of interim liquid storage would be required before acidic Purex wastes could be processed in 24-in.-dia vessels.

CONTENTS

		Page
1.0	Introduction	4
2.0	General Process Description	5
3.0	Waste Compositions and Processing Rates	5
4.0	Calcination Vessel Costs	11
5.0	Capital Costs	16
6.0	Operating and Total Costs	23
7.0	References	33
8.0	Appendix A	34
9.0	Appendix B	34

1.0 INTRODUCTION

A study has been undertaken to evaluate from economics and hazards standpoints the various methods of highly radioactive liquid and solid waste disposal being developed by the Laboratory and to evaluate the various operations leading to those ultimate storage methods. It is expected that this study will indicate the optimum combination of preliminary operations and final storage methods out of the large number of combinations possible. Such an evaluation is a necessary prerequisite to the most meaningful experimental study of radioactive waste disposal.

A 6-tonne/day plant is assumed, processing 1500 tonnes/year of uranium converter fuel at a burnup of 10,000 Mwd/tonne and 270 tonnes/year of thorium converter fuel at a burnup of 20,000 Mwd/tonne. This hypothetical plant would be processing all the fuel from a 15,000-Mw_e nuclear economy, which may be in existence by 1970. The preliminary operations to be evaluated are:

1. Interim liquid storage
2. Conversion to solids by pot calcination
3. Interim storage of solids in pots
4. Shipment as either liquids or calcined solids

The ultimate disposal methods to be evaluated are:

1. Calcined solids in salt deposits
2. Calcined solids in vaults
3. Calcined solids in vertical shafts
4. Liquids in salt deposits
5. Liquids in deep wells
6. Liquids by hydrofracture
7. Liquids in tanks

A cost study of interim liquid storage was completed and published as ORNL-3128 (1). The present study contains cost estimates of conversion to solids by pot calcination as a function of calcination vessel diameter and interim liquid storage time for all combinations of acidic and neutralized Purex and Thorex wastes. Costs of producing a glass from acidic Thorex waste were also estimated. Calcination vessel diameters investigated ranged from 6 to 24 in. and interim liquid storage periods from 0 to 30 years.

A calcination vessel geometry of a right circular cylinder was chosen for this study because all experimental work at ORNL has been done with

this design. A cost advantage of annular containers over cylindrical containers of 20 to 25% has been predicted by Campbell (2), but his method of establishing equivalent sizes is not clear.

Acknowledgment

The design of the flanged calcination vessel is based on the experimental vessels of C. W. Hancher. The alternative design using a Grayloc closure was suggested by J. M. Holmes. The authors are indebted to W. G. Stockdale for helpful advice on cost estimation.

2.0 GENERAL PROCESS DESCRIPTION

In the proposed process (Fig. 1) the waste is fed to an evaporator together with nitric acid or water to maintain the acid concentration in the evaporator below 6 M to minimize ruthenium volatilization. Evaporation may be either batch or continuous; a catch tank is used between the evaporator and calciner in batch operations. This continuous flowsheet differs from some shown previously in the recycling of calciner off-gases, containing nitrogen oxides, through the evaporator and continuous addition of dilute nitric acid to the evaporator. The evaporator concentrates go to an electrically heated pot at essentially their initial concentrations, where they are evaporated to dryness and calcined to 900°C. Chemical additives, such as calcium or magnesium salts, and phosphorous acid may be added prior to calcination to decrease sulfate and fission product volatility or to produce a melt in the pot after calcination. After being filled with calcined solids, the stainless steel pot will be sealed and used as both the shipping and permanent storage vessel. About 90% of the nitrogen oxides in the calciner off-gas can be absorbed during condensation of water vapor in the evaporator condenser, the remainder in the rectifier reflux condenser. About 1 cu ft of noncondensable gas per gallon of feed is anticipated in relatively leak-tight process equipment; only a small final absolute filter and gas cleanup system will be required.

3.0 WASTE COMPOSITIONS AND PROCESSING RATES

The Purex and Thorex wastes entering the calcination plant may be in acidic or neutralized form, depending on which form was chosen for interim

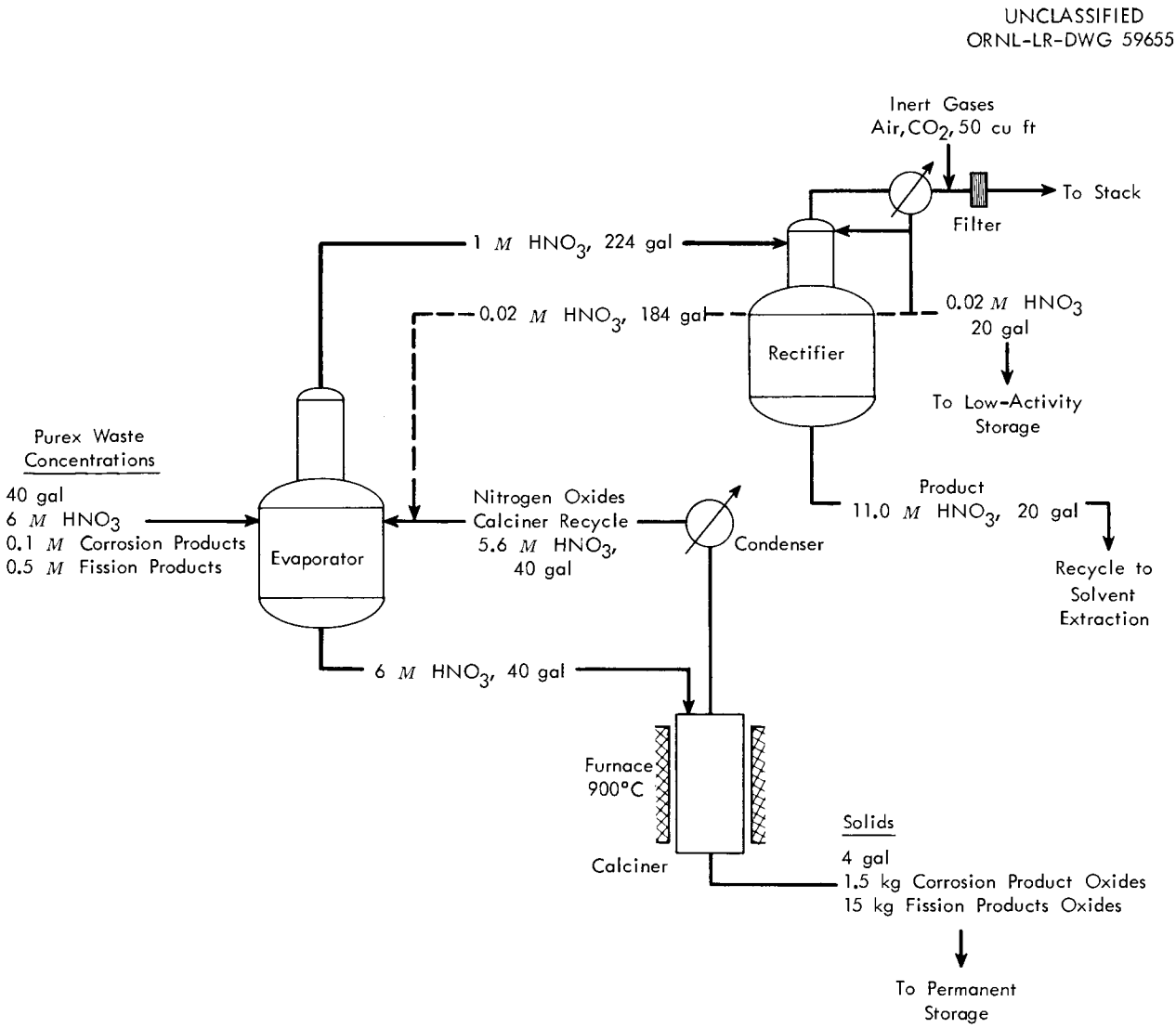

Fig. 1. Typical flowsheet for converting high-activity wastes to solids by pot calcination.

liquid storage. If either or both are neutralized, they must be reacidified to avoid, during calcination, the formation of solid sodium nitrate, which is not sufficiently stable in the presence of high temperatures and radiation for ultimate storage. Chemical compositions of acidic, neutralized, and reacidified (with sulfuric acid) Purex and Thorex wastes are given in Table 1. The compositions are not important to this study except as they affect the volume reduction factor in passing from the liquid to the solid phase.

Waste volumes per metric ton of fuel processed are listed for the waste types in Table 1. Specific volumes for liquid wastes entering the plant range from 50 gal/tonne for acid Purex to 770 gal/tonne for reacidified Thorex, and for wastes after calcination range from 7.1 gal/tonne for acid Purex to 133 for reacidified Thorex.

The processing cycle consists of three periods: (1) the solids deposition period, during which liquid waste is pumped into the vessel at a sufficient rate to maintain a constant liquid level near the top of the vessel and the walls are held at 900°C, so that the vessel fills with solids by evaporation; (2) the calcination period, during which the solid is heated to 900°C to drive off volatile constituents; and (3) change-out time, during which feed and off-gas lines are detached from a filled and calcined vessel, a storage fitting is welded on the top, the filled vessel is replaced by an empty one, and feed and off-gas lines are attached. Melting occurs during the calcination period with reacidified wastes due to the low melting point of Na_2SO_4 (884°C), so that following the calcination period only about the lower half of the vessel is occupied. It might be desirable with a reacidified waste to allow the melt to freeze after calcination and repeat the solids deposition and calcination parts of the cycle to improve utilization of space in the vessel.

Engineering studies of processing rates in 6- and 8-in.-dia by 7-ft-high-calcination vessels have been carried out with acidic Purex, Darex, and TBP-25 wastes and reacidified Purex waste (3-5). The TBP-25 waste is similar to Thorex waste, both being composed mostly of aluminum nitrate and nitric acid and both being about 1.5 M in aluminum. Hence the results of the experimental work with TBP-25 waste may be applied to the Thorex waste also. The engineering studies showed that the average processing rate during the filling period is directly proportional to the length of the calcination vessel and independent of the diameter.

Table 1. Compositions of Purex and Thorex Wastes

Component	Purex			Thorex		
	Acidic	Neutralized	Reacidified	Acidic	Neutralized	Reacidified
Volume, gal/ton	50	60	80	400	642	770
H^+, N	7.3	-	4.5	-	-	-
Na^+, N	0.7	8.4	6.3	-	7.1	5.9
Fe^{3+}, N	1.1	0.9*	0.7	-	-	-
NO_3^-, N	8.4	7.0	5.2	6.7	4.2	3.5
OH^-, N	-	1.7*	-	0.5**	1.4	0.2**
$SO_4^=$, N	0.7	0.6	6.3	-	-	5.9
Al^{3+}, N	-	-	-	7.2	-	3.7
AlO_2^-, N	-	-	-	-	1.5	-
Solids vol, gal/ton	7.1 (porous) Na_2SO_4 + Fe_2O_3	-	13.5 (melted) Na_2SO_4 + Fe_2O_3	60 (porous) Al_2O_3	-	133 (melted) Na_2SO_4 + Al_2O_3

*0.9 of the OH^- is precipitated with the Fe^{3+} as $Fe(OH)_3$.

**Acid deficient; OH^- actually present as $Al(OH)(NO_3)_2$.

The calcination vessel height was fixed at 10 ft for this study, with the lower 8 ft designated as active heat transfer surface and the upper 2 ft as a vapor-liquid disengaging space. From processing rate considerations, the vessel should be as long as practicable, but a length exceeding 10 ft was considered impracticable for handling, shielding, and transportation during and after calcination. From the engineering studies an average processing rate of 26.7 liters/hr was calculated for acidic and reacidified Purex and Thorex wastes for a vessel with an active height of 8 ft and in which the solids deposition period is terminated when the active volume is 90% filled with solids. This processing rate and the specific waste volumes in Table 1 were used to calculate the number of calcination vessels required per year and the number of calcination units working in parallel (or processing lines) for these four waste types for vessel diameters of 6, 12, and 24 in. Calcination and change-out times of 3 and 8 hr were assumed, both of which are thought to be conservative. A study of the effects of internal heat generation on processing rate showed that Purex waste after 2 years' decay would require less than 15 min for calcination (6).

The number of calcination vessels per year and number of processing lines were also calculated for the production of an acidic Thorex glass in 6-in.-dia cylinders, using British pilot plant information for the volume reduction factor and the processing cycle time (7). Other vessel diameters were not considered for the glass because the effect of diameter on cycle time was not given by the British work. The glass is a silica-borax-alumina type, containing about 30% Al_2O_3 and melting at 1050-1100°C. This composition corresponds to a specific volume of 78 gal/ton. A cycle time of 65 hr was assumed, based on the British estimate of 48 hr for a 5-ft-high vessel filled to 3.75 ft.

The numbers of calcination vessels required per year ranged from 58 for acidic Purex in 24-in.-dia vessels to 6170 for reacidified Thorex in 6-in.-dia vessels (Table 2).

The numbers of processing lines required for these wastes (allowing 15 to 20% downtime) ranged from 2 for acidic Purex in 12- and 24-in.-dia vessels to 16 for acidic Thorex glass in 6-in.-dia vessels (Table 2). An example calculation for reacidified Purex in a 12-in.-dia vessel follows:

Table 2. Numbers of Calcination Vessels per year and Process Lines Required for Wastes from 6-ton/day Processing Plant

Waste Type	Number of Calcination Vessels			Number of Lines		
	6-in.-dia	12-in.-dia	24-in.-dia	6-in.-dia	12-in.-dia	24-in.-dia
Acidic Purex	925	231	58	3	2	2
Reacidified Purex	3490	872	218	8	4	3
Reacidified Purex Filled Twice	2320	580	145	7	4	4
Acidic Thorex	1390	348	87	4	3	3
Acidic Thorex Glass	1800	-	-	16	-	-
Reacidified Thorex	6170	1540	386	13	7	5
Reacidified Thorex Filled Twice	4110	1028	257	13	7	6

Occupied volume of vessel = $\pi(0.5)^2(4)(7.48)$ = 23.3 gal

Filling rate = (26.7 liters liquid/hr)(13.5/80)(1 gal/3.79 liters)
= 1.19 gal solid/hr

Therefore the processing cycle is

Filling time	19.7 hr
Calcination	3
Change-out	8
	30.7 hr

Waste volume per year = (1500 tons/yr)(13.5 gal/ton) = 20,300 gal solid/yr

No. of vessels per year = (20,300)(1/23.3) = 872

No. of processing lines = (30.7 hr/vessel)(872 vessels/yr)(1 yr/8750 hr) = 3.06

∴ 4 lines required

In calculating the time cycle for filling twice, it was assumed that 2 hr was required for melting and freezing in between the two fillings. Thus the total filling time for reacidified Purex in a 12-in.-dia vessel filled twice would be 41.4 hr and the total cycle time 52.4 hr. The vessel would then have been filled to a 6-ft height.

A promising process for an acidic Purex glass is currently under development at ORNL (8). Phosphite ion is added to the waste to provide a reducing agent for ruthenium and to make a phosphate glass. Engineering studies have not yet been performed, so that a process cycle time cannot be predicted with reasonable certainty. However, from previous experience it is expected that the required number of vessels per year will be about the same as for acid Purex (if vessels can be filled twice) and that the number of processing lines will be about the same as for reacidified Purex.

4.0 CALCINATION VESSEL COSTS

The detailed design of the calcination vessel is somewhat speculative because a remotely operated pilot plant is only now in the preliminary design stage. Two possible designs which are thought to be realistic for cost estimating purposes are shown in Figs. 2 and 3. The flanged calcination vessel in Fig. 2 is very similar to those used in the engineering studies mentioned in Sect. 3.0. A photograph and drawing of a top flange containing instrument, off-gas, and liquid feed lines used during the filling and calcination period are shown in reference 2. This "feed flange" can be used many times. A storage flange might be attached after calcination, containing a

UNCLASSIFIED
D-34575

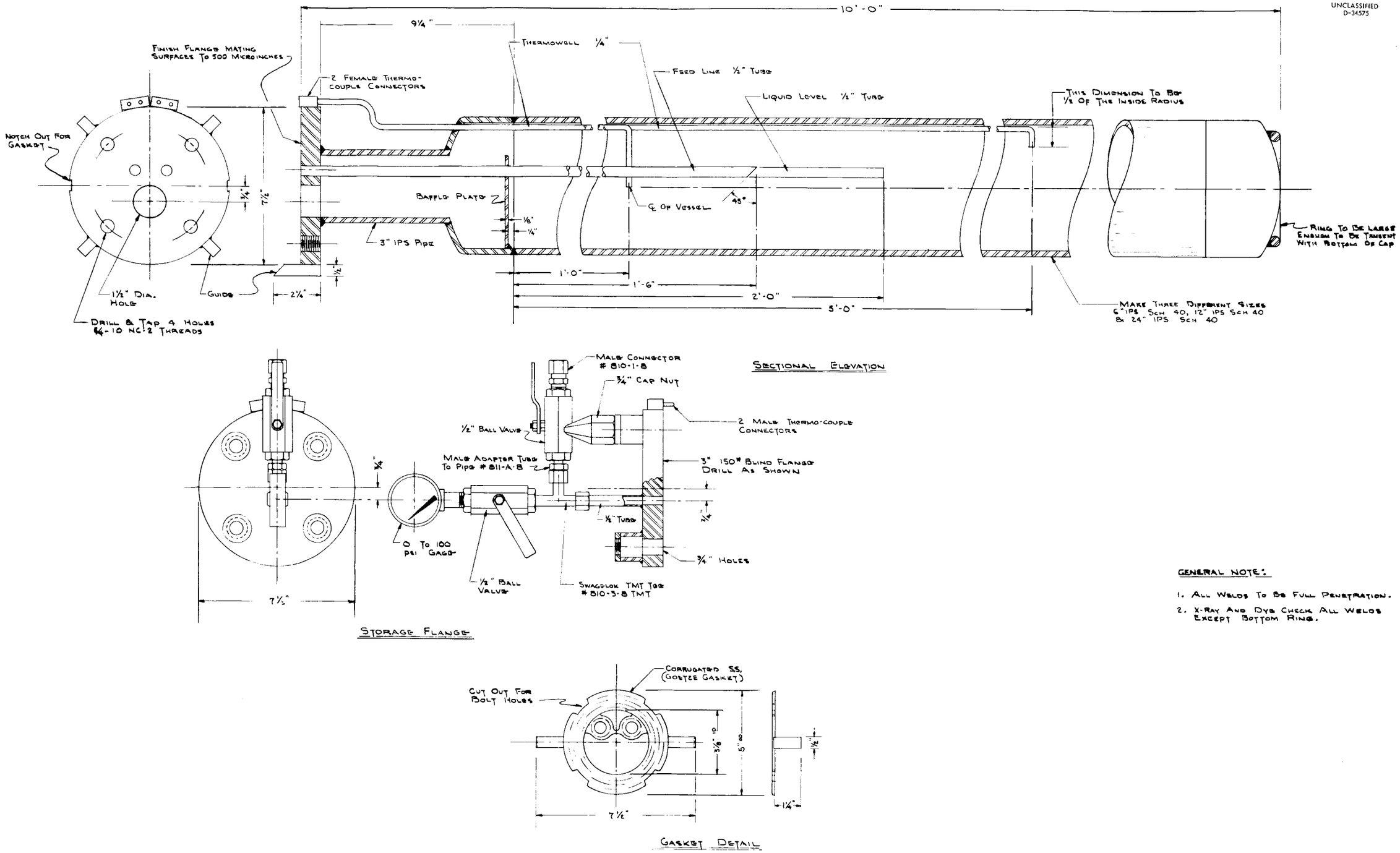

General Note:

1. All Welds To Be Full Penetration.
2. X-Ray And Dye Check All Welds Except Bottom Ring.

Fig. 2. Flanged calcination vessel.

UNCLASSIFIED
D-34578

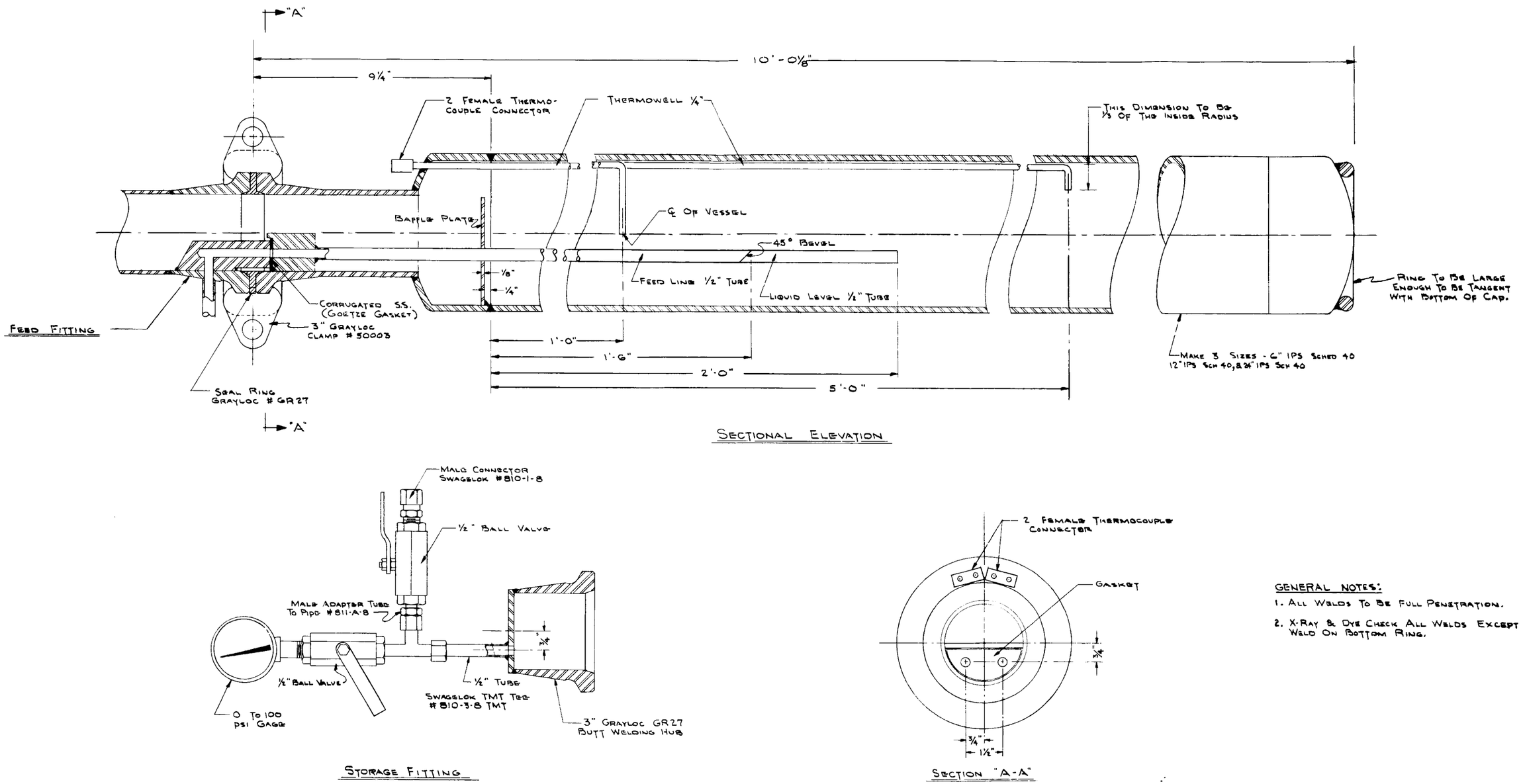

GENERAL NOTES:

1. All Welds To Be Full Penetration.
2. X-Ray & Dye Check All Welds Except Weld On Bottom Ring.

Fig. 3. Calcination vessel with grayloc closure.

pressure gauge and vent valve for use during observation and interim storage periods. Prior to ultimate storage a hood might be welded over the storage flange to the body of the vessel, or the storage flange might be replaced by a blind flange welded to the vessel. The tapered-cap nuts are for ease in use of remotely operated wrenches.

An alternative vessel design, not yet tested, has a Grayloc closure in place of flanges. Only two bolts would have to be tightened in making up this closure compared with four for the flanged vessel. Again, the "feed fitting" can be used many times.

The choice of schedule 40 pipe for the vessel proper would allow calciner vessels to withstand over 200 psi during calcination (applying a safety factor of 3 to the short-time tensile strength of 11,000 psi at 1000°C) without undergoing any deformation (9). Much higher pressures could be withstood during storage when the vessel walls are at lower temperatures. Thus the vessel designs presented are believed to be quite conservative from safety aspects.

Preliminary cost estimates were obtained through the ORNL Purchasing Department from a private company experienced in fabrication with stainless steel. Costs in lots of 100 vessels of flanged design were $575 each for 6-in.-dia, $925 for 12-in.-dia, and $2515 for 24-in.-dia. These costs include the storage flange but not the feed flange. Vessels with Grayloc closures would cost about $60 more each than flanged vessels. Purchase in lots of 1000 would decrease costs about $70 each for flanged vessels and $140 each for vessels with Grayloc closures. Thus the estimated costs differ less than 10% between the two designs if bought in lots of 100 and are almost identical if bought in lots of 1000. From the numbers of calcination vessels required per year given in Table 2, it appears reasonable to buy 6- and 12-in.-dia vessels in lots of 1000 at $500 and $855 each, and 24-in.-dia vessels in lots of 100 at $2515 each.

The costs of vessels per year for calcination plants using all combinations of wastes and vessel diameters are given in Table 3. Costs range from $365,000 per year for a plant processing both Purex and Thorex wastes in acidic form in 24-in.-dia vessels to $4,830,000 per year for a plant processing both wastes in reacidified form in 6-in.-dia vessels.

Table 3. Costs of Calcination Vessels Per Year as a Function of Combinations of Waste Types and Vessel Sizes

Combination of Types	Costs, 10^3 Dollars Per Year								
	6-in.-dia Purex 6-in.-dia Thorex	6-in.-dia Purex 12-in.-dia Thorex	6-in.-dia Purex 24-in.-dia Thorex	12-in.-dia Purex 6-in.-dia Thorex	12-in.-dia Purex 12-in.-dia Thorex	12-in.-dia Purex 24-in.-dia Thorex	24-in.-dia Purex 6-in.-dia Thorex	24-in.-dia Purex 12-in.-dia Thorex	24-in.-dia Purex 24-in.-dia Thorex
Acidic Purex-Acidic Thorex	1,157	759	681	892	494	416	841	443	365
Acidic Purex-Acidic Thorex Glass	1,362	-	-	1,097	-	-	1,046	-	-
Acidic Purex-Reacidified Thorex	3,547	1,779	1,433	3,282	1,514	1,168	3,231	1,463	1,117
Acidic Purex-Reacidified Thorex Filled Twice	2,517	1,341	1,108	2,252	1,076	843	2,201	1,025	792
Reacidified Purex-Acidic Thorex	2,440	2,042	1,964	1,440	1,042	964	1,243	845	767
Reacidified Purex-Acidic Thorex Glass	2,645	-	-	1,645	-	-	1,448	-	-
Reacidified Purex-Reacidified Thorex	4,830	3,062	2,716	3,830	2,062	1,716	3,633	1,865	1,519
Reacidified Purex-Reacidified Thorex Filled Twice	3,800	2,624	2,391	2,800	1,624	1,391	2,603	1,427	1,194
Reacidified Purex Filled Twice-AcidicThorex	1,855	1,457	1,379	1,191	793	715	1,060	662	584
Reacidified Purex Filled Twice-Acidic Thorex Glass	2,060	-	-	1,396	-	-	1,265	-	-
Reacidified Purex Filled Twice-Reacidified Thorex	4,245	2,477	2,131	3,581	1,813	1,467	3,450	1,682	1,336
Reacidified Purex Filled Twice-Reacidified Thorex Filled Twice	3,215	2,039	1,806	2,551	1,375	1,142	2,420	1,244	1,011

5.0 CAPITAL COSTS

The processing plant cell block was considered to be made up of three areas: (1) calcination area, (2) evaporator and off-gas equipment area, and (3) testing and decontamination area. The required cell floor area for calcination was assumed to be directly proportional to the number of processing lines and independent of vessel diameter, and was taken to be 100 sq ft per process line. An evaporator and off-gas cell area of 200 sq ft for a single processing line was assumed. Since the evaporator and off-gas equipment duty peaks sharply during the operation of a single processing line, the peaks were assumed to be staggered at equal time intervals, and a plant peak load factor was obtained from a normalized typical duty profile to which a coincidence factor was added as a conservative measure (details in Appendix A). The required area for evaporator and off-gas equipment was then assumed proportional to the square root of this plant peak load factor. The required cell floor area for decontamination and testing was taken to be 200 sq ft plus 9 sq ft per vessel for a 3-day production holdup.

Total cell floor areas for all 90 combinations of Purex and Thorex waste types in the three vessel diameters were calculated (Table 4). The range is from 1090 sq ft for an acidic Purex—acidic Thorex plant with 24-in.-dia calcination vessels for both waste types to 3490 sq ft for a reacidified Purex—acidic Thorex glass plant with 6-in.-dia calcination vessels for both. Fractions of the three subareas correlated well with total cell area and were roughly independent of waste type and vessel size, so that three total cell areas spanning the range could be chosen for cost estimation, with costs of intermediate plant sizes to be obtained from a plot. The three plant sizes are 1200, 2300, and 3200 sq ft (Table 5).

Table 5. Cell Floor Areas of Pot Calcination Plants Chosen For Cost Estimation

Items	Area, sq ft		
	Case 1	Case 2	Case 3
Calcination	600	1380	1920
Evaporator and Off-Gas	360	460	480
Testing and Decontamination	240	460	800
Total	1200	2300	3200

Table 4. Total Cell Block Area for Various Combinations of Waste Types and Pot Diameters

Combination of Types	Area, sq ft								
	6-in.-dia Purex 6-in.-dia Thorex	6-in.-dia Purex 12-in.-dia Thorex	6-in.-dia Purex 24-in.-dia Thorex	12-in.-dia Purex 6-in.-dia Thorex	12-in.-dia Purex 12-in.-dia Thorex	12-in.-dia Purex 24-in.-dia Thorex	24-in.-dia Purex 6-in.-dia Thorex	24-in.-dia Purex 12-in.-dia Thorex	24-in.-dia Purex 24-in.-dia Thorex
Acidic Purex-Acidic Thorex	1450	1270	1250	1300	1120	1100	1290	1110	1090
Acidic Purex-Acidic Thorex Glass	2790	-	-	2640	-	-	2630	-	-
Acidic Purex-Reacidified Thorex	2720	1780	1500	2570	1630	1340	2560	1620	1330
Acidic Purex-Reacidified Thorex Filled Twice	2590	1760	1610	2440	1610	1460	2430	1600	1440
Reacidified Purex-Acidic Thorex	2150	1970	1950	1560	1380	1360	1410	1230	1210
Reacidified Purex-Acidic Thorex Glass	3490	-	-	2900	-	-	2750	-	-
Reacidified Purex-Reacidified Thorex	3410	2470	2180	2820	1880	1590	2670	1730	1440
Reacidified Purex-Reacidified Thorex Filled Twice	3290	2460	2310	2700	1870	1710	2550	1720	1560
Reacidified Purex Filled Twice-Acidic Thorex	1970	1800	1780	1550	1370	1350	1510	1340	1320
Reacidified Purex Filled Twice-Acidic Thorex Glass	3310	-	-	2890	-	-	2850	-	-
Reacidified Purex Filled Twice-Reacidified Thorex	3240	2300	2010	2710	1870	1580	2780	1830	1550
Reacidified Purex Filled Twice-Reacidified Thorex Filled Twice	3120	2290	2130	2690	1860	1700	2650	1830	1670

Operating areas were assumed to be 15 ft wide and to extend the full length and on both sides of the cell block (Figs. 4 and 5). For plants with various total cell areas the width was assumed constant, and only the length of the building was allowed to vary.

Shielding calculations (Appendix B) showed that wall thicknesses of 5-7.4 ft of ordinary concrete arerequired for processing Purex wastes decayed from 30 years to 120 days (Fig. 6). Building costs were obtained by cost-estimating the following items for each of the three plant sizes with 5-, 6-, and 7-ft shielding walls: (1) cell blocks (figured at $100 per cubic yard of concrete in place); (2) operating areas, including crane house (operating areas figured at $1.50/cu ft, crane house $1/cu ft); (3) cell windows (zinc bromide figured at $225 per cu ft installed; windows 2 ft square on operating side and 4 ft square on cell side for 5-ft-thick wall and proportionally larger on cell side for thicker walls, windows spaced approximately 8 ft on centers); (4) bridge crane (100 ton, to lift 24 x 10 x 5 ft roof plug); (5) lead doors (figured at 30¢/lb installed); (6) stainless steel cell lining on all cell floors and walls ($10/sq ft); (7) sampling stations (three for each waste type, six total); (8) cell ventilation and exhaust (assumed one cell block air change per 10 min); (9) stack for cell ventilation and off-gas (2 ft i.d. by 200 ft high); (10) site preparation and service facilities. To the totals of the above 10 items were added 40% for construction overhead, 15% for engineering, and 20% for contingencies. Total building costs thus ranged from $\$1.7 \times 10^6$ for a 1200-sq ft cell block with 5-ft-thick walls to $\$3.9 \times 10^6$ for a 3200-sq ft cell block with 7-ft-thick walls. Building costs were amortized over 50 years at 4% interest, resulting in annual costs ranging from $79,000 to $181,000. A breakdown of the building costs for the three plant sizes is shown in Table 6.

Process equipment items were separated into two groups, those amortized over 20 years and those over 10 years. Twenty-year items estimated were: (1) feed and off-gas equipment (includes storage tanks, pumps, evaporators, and condenser, and does not vary with the number of processing lines); (2) furnaces (one per processing line at $12,000 each regardless of diameter since average processing rate is independent of calcination vessel diameter); (3) remote welder; (4) remote manipulators (General Mills model 550 plus 3-ton hoist at $80,000 each); (5) pipe, valves, fittings, etc. (figured at

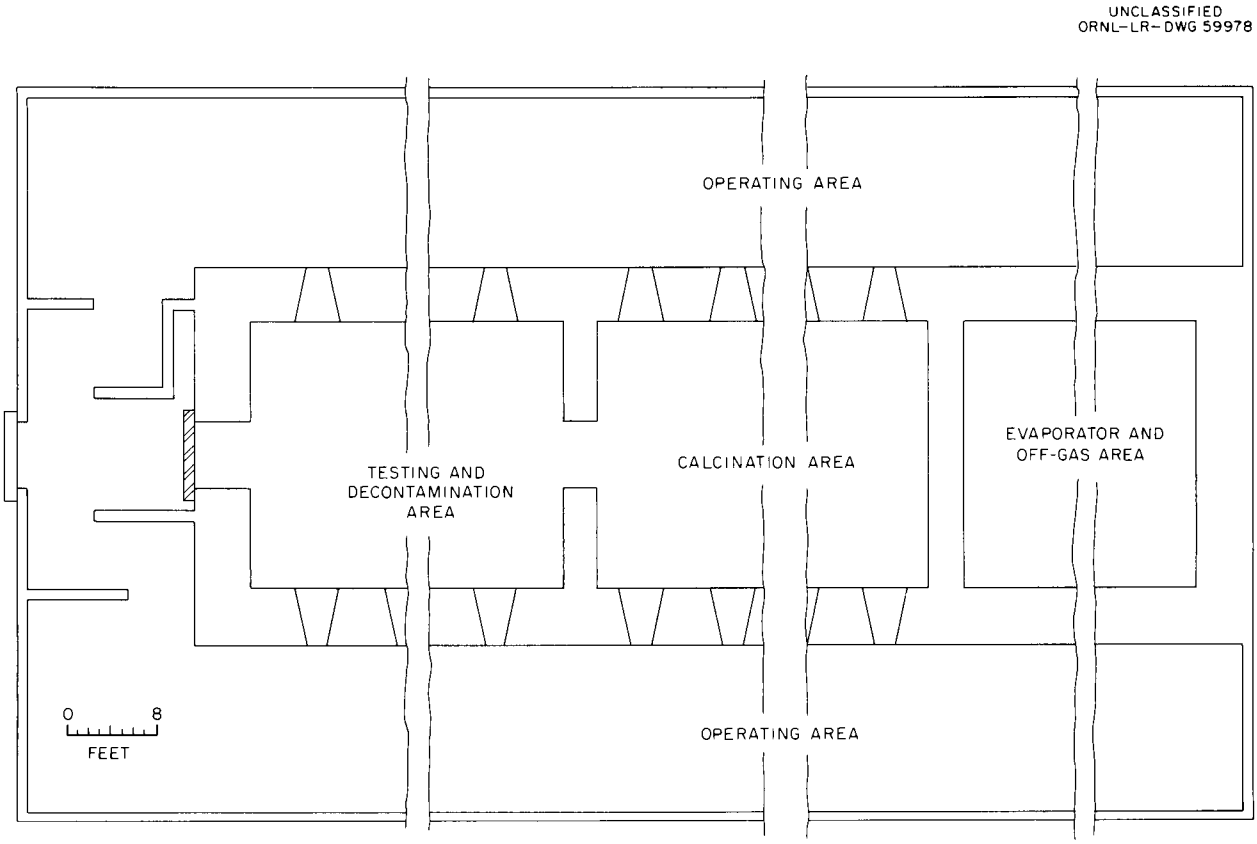

Fig. 4. Plan sketch of calcination plant building.

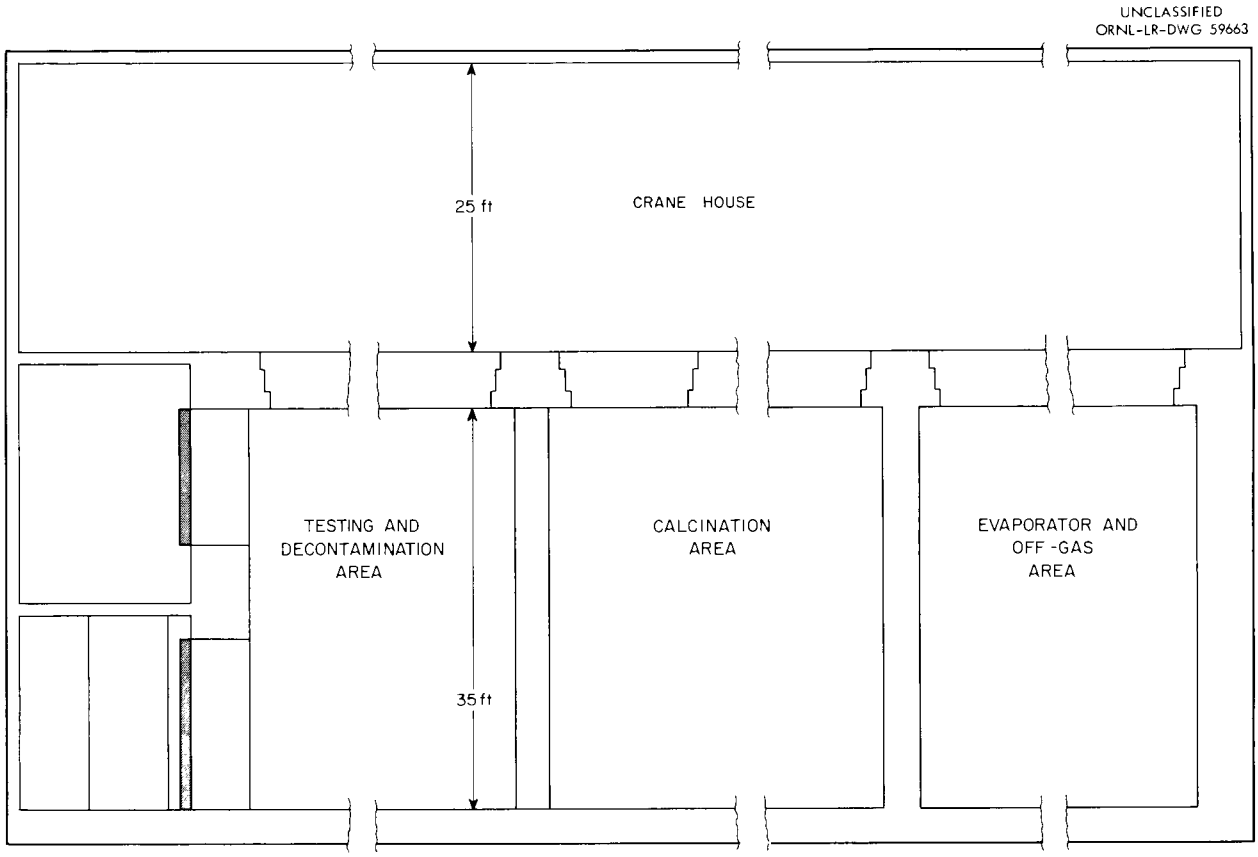

Fig. 5. Elevation sketch of calcination plant building.

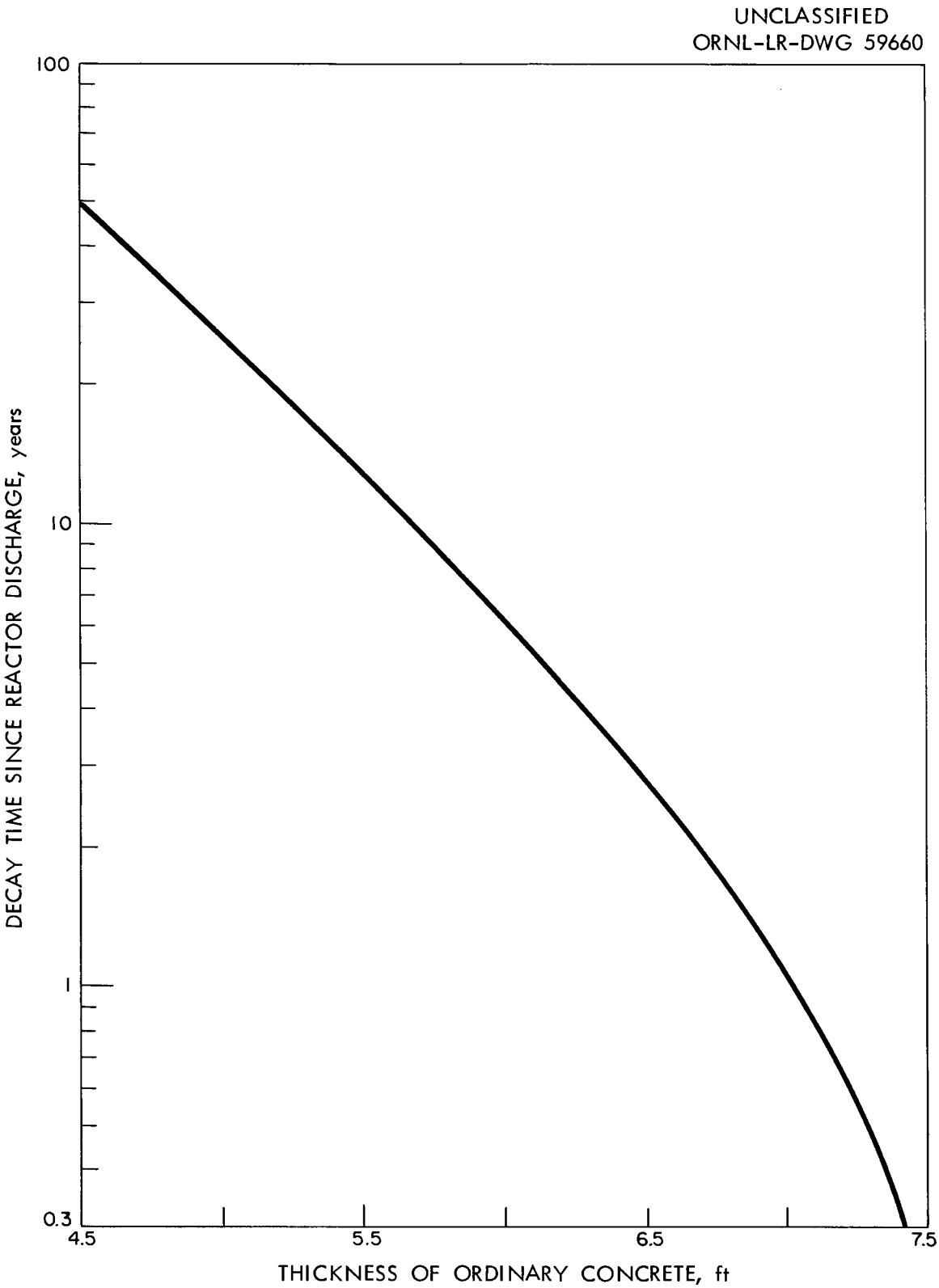

Fig. 6. Required thickness of shielding wall as a function of decay time.

Table 6. Costs of 50-year Items as a Function of Shielding Wall Thickness and Total Cell Floor Area (All figures in dollars)

	5-ft Shielding			6-ft Shielding			7-ft Shielding		
	1200 ft^2	2300 ft^2	3200 ft^2	1200 ft^2	2300 ft^2	3200 ft^2	1200 ft^2	2300 ft^2	3200 ft^2
Concrete Cell Blocks	200,000	310,000	390,000	242,000	370,000	471,000	283,000	431,000	550,000
Operating Areas	210,000	312,000	394,000	210,000	312,000	394,000	210,000	312,000	394,000
Cell Windows	90,000	200,000	315,000	131,000	295,000	457,000	180,000	405,000	630,000
Bridge Crane	100,000	100,000	100,000	100,000	100,000	100,000	100,000	100,000	100,000
Lead Doors	45,000	45,000	45,000	54,000	54,000	54,000	63,000	63,000	63,000
Cell Lining	97,000	140,000	175,000	97,000	140,000	175,000	97,000	140,000	175,000
Sampling Stations	70,000	70,000	70,000	70,000	70,000	70,000	70,000	70,000	70,000
Cell Ventilation and Exhaust	45,000	65,000	75,000	45,000	65,000	75,000	45,000	65,000	75,000
Stack	30,000	30,000	30,000	30,000	30,000	30,000	30,000	30,000	30,000
Site Preparation and Service Facilities	80,000	113,000	140,000	80,000	113,000	140,000	80,000	113,000	140,000
Subtotal	967,000	1,385,000	1,734,000	1,059,000	1,549,000	1,966,000	1,158,000	1,729,000	2,227,000
Construction Overhead	387,000	552,000	692,000	424,000	620,000	788,000	464,000	692,000	892,000
Engineering	145,000	207,000	259,000	159,000	232,000	295,000	174,000	259,000	334,000
Contingencies	193,000	276,000	346,000	212,000	310,000	394,000	232,000	346,000	446,000
TOTAL	1,692,000	2,420,000	3,031,000	1,854,000	2,711,000	3,443,000	2,028,000	3,026,000	3,899,000
Total Cost Per Year	78,800	113,000	141,000	86,000	126,000	160,000	94,400	141,000	181,000

70% of total of the first three items); (6) electrical (10% of total of first four items), (7) insulation (5% of total of first four items); (8) sampling equipment. To the above items were added 40, 15, and 20% for construction overhead, engineering, and contingencies, respectively. Total 20-year equipment costs ranged from $865,000 for a 1200-sq ft cell block to $1,715,000 for a 3200-sq ft cell block. Amortized over 20 years at 4% interest, the annual costs ranged from $64,000 to $126,000. In Table 7 is a breakdown of the 20-year process equipment costs.

Canned rotor pumps and instrumentation were assumed to be 10-year items. For purposes of cost estimation, instruments were grouped as health physics and process instrumentation, and instruments directly associated with control and monitoring of the calcination vessel. Both health physics and process instrumentation were assumed to be independent of plant size. Processing line instrumentation was figured at $10,000 per line. Yearly costs were $26,500, $46,000, and $58,000 for the three hypothetical plants (Table 8).

Total capital costs per year were figured as the totals of the 50-, 20-, and 10-year items taken from Tables 6 through 8. The costs are summarized in Table 9 for the three hypothetical plant sizes with 5-, 6-, and 7-ft-thick shielding walls. The data are plotted in Fig. 7. Total capital costs per year ranged from $169,000 for the 1200-sq ft cell area plant with 5-ft-thick walls to $365,000 for the 3200-sq ft plant with 7-ft-thick walls.

6.0 OPERATING AND TOTAL COSTS

Of the conventional operating costs, only labor costs were not negligible when compared with calcination vessel and capital costs. The labor force was broken down into six occupations: (1) manipulator operators; (2) process line operators (one operator to monitor and control two process lines); (3) remote welder operator; (4) instrument mechanic; (5) health physics technician; and (6) supervisor. Labor costs were estimated for three plant sizes spanning the range 1200, 2300, and 3200 sq ft and were plotted against plant size for use in obtaining labor costs of intermediate-sized plants.

A breakdown of the labor force for the three plant sizes is given in Table 10, showing a total of 41 men for a 1200-sq ft plant with six processing lines and 84 men for a 3200-sq ft plant with 19 processing lines. For

Table 7. Process Equipment Costs Amortized over 20 Years

Item	Cost, Dollars		
	1200-sq ft Plant	2300-sq ft Plant	3200-sq ft Plant
Feed and Off-gas Equipment	70,000	70,000	70,000
Furnaces	70,000	170,000	230,000
Remote Welding Equipment	15,000	15,000	15,000
Manipulators with Hoists	160,000	240,000	320,000
Pipe, Valves, Fittings, etc.	110,000	180,000	220,000
Electrical	30,000	50,000	65,000
Insulation	15,000	25,000	35,000
Sampling	20,000	20,000	20,000
Subtotal	490,000	770,000	975,000
Construction Overhead	200,000	310,000	390,000
Engineering	75,000	115,000	150,000
Contingency	100,000	155,000	200,000
Total	865,000	1,350,000	1,715,000
Cost Per Year (4% interest)	63,700	99,300	126,000

Table 8. Process Equipment Costs Amortized over 10 Years

Item	Cost, Dollars		
	1200-sq ft Plant	2300-sq ft Plant	3200-sq ft Plant
Canned Rotor Pumps	6,000	14,000	19,000
Instrumentation			
Process line	60,000	140,000	190,000
Process	35,000	35,000	35,000
Health Physics	20,000	20,000	20,000
Subtotal	120,000	210,000	265,000
Construction Overhead (40%)	50,000	85,000	110,000
Engineering (15%)	20,000	35,000	40,000
Contingency (20%)	25,000	45,000	55,000
Total	215,000	375,000	470,000
Cost Per Year (4% interest)	26,500	46,200	57,900

Table 9. Total Capital Costs Per Year (Dollars)

	1200-sq ft Plant			2300-sq ft Plant			3200-sq ft Plant		
	5-ft wall	6-ft wall	7-ft wall	5-ft wall	6-ft wall	7-ft wall	5-ft wall	6-ft wall	7-ft wall
50-year Items	79,000	86,000	94,400	113,000	126,000	141,000	141,000	160,000	181,000
20-year Items	63,700	63,700	63,700	99,300	99,300	99,300	126,000	126,000	126,000
10-year Items	26,500	26,500	26,500	46,200	46,200	46,200	57,900	57,900	57,900
Total	169,000	176,000	185,000	258,000	271,000	286,000	325,000	344,000	365,000

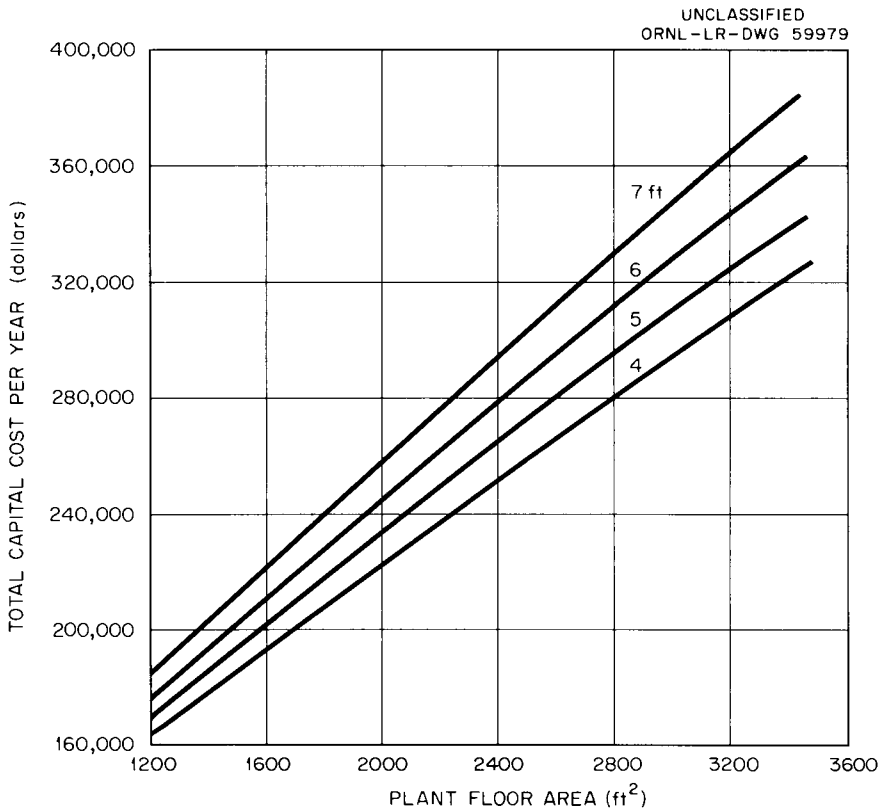

Fig. 7. Total capital cost per year as a function of shield wall thickness and plant floor area.

Table 10. Labor Force and Costs as a Function of Plant Size

Item	Number of Men		
	1200-sq ft Plant	2300-sq ft Plant	3200-sq ft Plant
Manipulator Operators	10	15	20
Process Line Operators	15	35	48
Remote Welder Operator	5	5	5
Instrument Mechanic	5	5	5
Supervisor	5	5	5
Health Physicist	1	1	1
Total	41	66	84
	Annual Costs		
Salaries ($7500/year)	$307,000	$ 495,000	$ 630,000
Maintenance (10% of 10 and 20-Year Capital Items)	126,000	202,000	258,000
Overhead (50%)	216,000	348,000	444,000
Total	$650,000	$1,050,000	$1,330,000

each round-the-clock job, 5 man-years/year were assumed. Thus, for example, 10 men would be required to operate the two manipulators in the 1200-sq ft plant, and 15 men would be required to operate the six process lines. Average salaries of $7500 per year were assumed. Yearly maintenance and repair costs for the equipment (in addition to the instrument mechanic's salary) were estimated at 10% of the capital invested in process equipment. An overhead charge of 50% was added, giving operating costs ranging from $650,000 per year for a 1200-sq ft plant to $1,330,000 per year for a 3200-sq ft plant. These costs are plotted as a function of plant size in Fig. 8.

Total annual costs of plants handling all 12 combinations of waste types of ages 120 days and 1, 3, 10, and 30 years in all nine combinations of vessel diameters were calculated. For a given combination of waste types and vessel diameters, the yearly cost of calcination vessels was obtained from Table 3, and the required plant floor area from Table 4. After choosing an age for the waste, shield wall thickness was obtained from Fig. 6. Total capital costs were then obtained from Fig. 7, and labor costs from Fig. 8. The sum of these three cost items gave a total cost per year, which was converted to mills/kwh_e by using the yearly electrical output of the assumed 15,000-Mw_e nuclear economy of 1.31×10^{11} kwh/year.

As an example, a plant processing 1-year-decayed acidic Purex and acidic Thorex wastes in 6-in.-dia vessels would require 7-ft-thick cell walls of ordinary concrete and would have the following yearly costs:

Calcination vessels	$1,157,000
Operating costs	745,000
Capital	208,000
Total	$2,110,000

This cost corresponds to 1.61×10^{-2} mill/kwh_e.

Some of the possible combinations of waste ages and vessel diameters are not permissible because of the excessive temperatures that would occur in the calcined solid wastes due to internal heat generation. Curves of specific heat generation rates as a function of time since reactor discharge (Fig. 9) were obtained from plots of total heat generation rate vs interim liquid storage time published in Part I of this study (1) and the known flow rates of processing wastes from the 6-ton/day plant. The temperature drop between the axis and wall of a solid cylinder with internal heat generation is given by

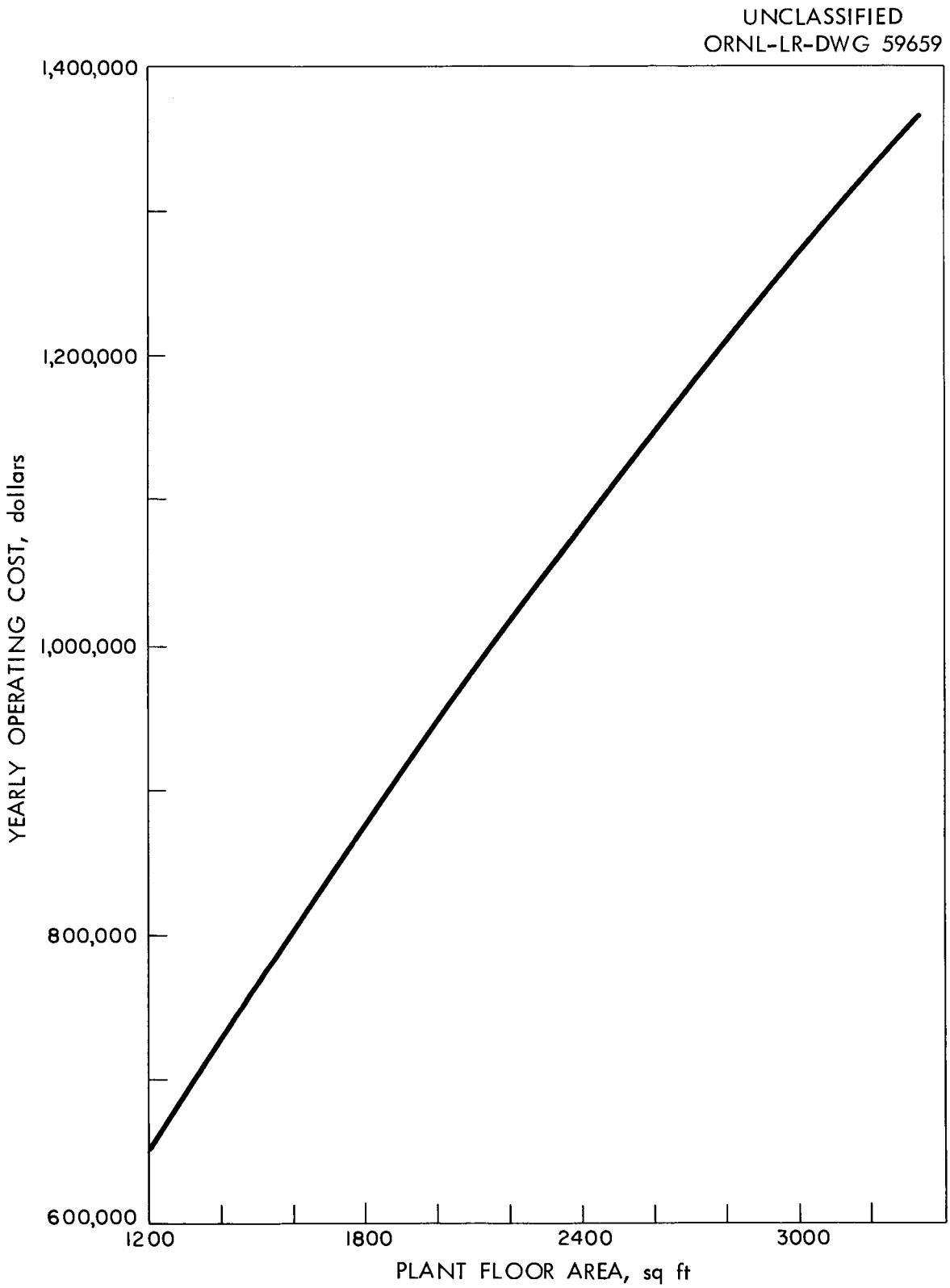

Fig. 8. Yearly operating costs as a function of plant floor area.

UNCLASSIFIED
ORNL-LR-DWG 59661 R1

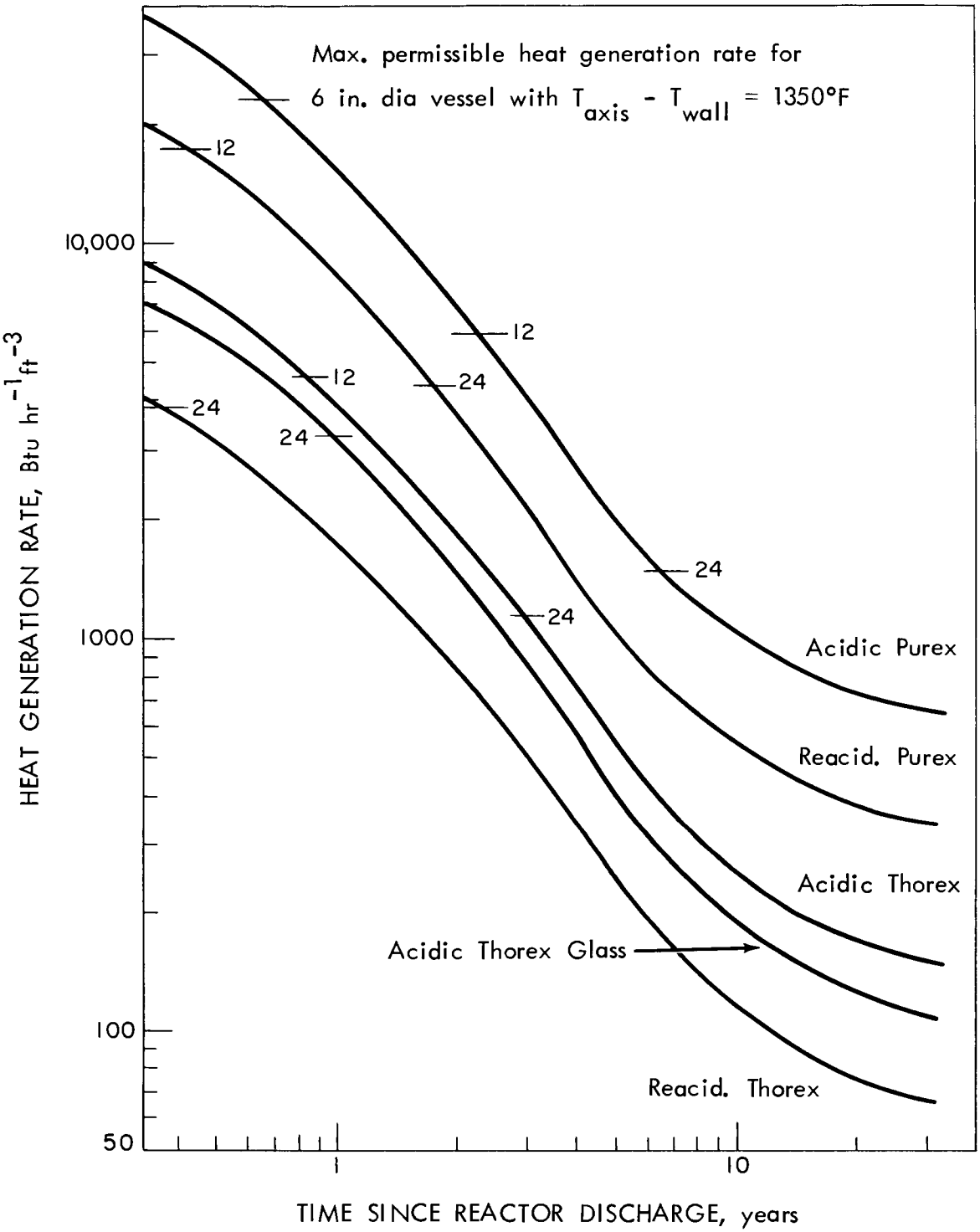

Fig. 9. Heat generation rate in calcined solid as a function of time since reactor discharge.

$$T_{axis} - T_{wall} = QR^2/4k$$

where T = temperature, ^oF

Q = heat generation rate, Btu hr^{-1} ft^{-3}

R = radius of cylinder, ft

k = thermal conductivity of solid, Btu hr^{-1} ft^{-1} $^oF^{-1}$

Assuming a maximum allowable temperature difference of 1350°F, which would allow the axis of the vessel to reach 1650°F, the maximum calcination temperature, while the surface was held at 300°F, maximum permissible heat generation rates were calculated for the three vessel diameters, using the following thermal conductivities for the calcined solids:

Waste Type	Thermal Conductivity, Btu hr^{-1} ft^{-1} $^oF^{-1}$
Acidic Purex	0.25
Reacidified Purex	0.75
Acidic Thorex	0.20
Reacidified Thorex	0.67
Acidic Thorex Glass	0.56

These maximum permissible rates are marked on Fig. 9.

Total costs in mills/kwh_e for plants handling all permissible combinations of waste types, vessel diameters, and decay times are given in Table 11. It was found that decay time prior to calcination had a negligible effect on costs except that it allowed larger diameter vessels to be used. For example, a plant processing acidic Purex and acid Thorex wastes in 6-in.-dia vessel could not be fed 120-day-old wastes because excessive temperatures would be produced in the Purex-containing vessel. The difference in costs of processing these wastes decayed 1 or 30 years in 6-in.-dia vessels decreases only from 1.61×10^{-2} to 1.59×10^{-2} mill/kwh_e. However, while 6-in.-dia vessels are the largest that can be used for the 1-year-decayed wastes, the 30-year-decayed wastes could be processed in 24-in.-dia vessels at a cost of 0.87×10^{-2} mill/kwh_e. The length of decay time for given waste types and vessel sizes is not important because it affects only capital costs, which were always small compared with operating and vessel costs.

The highest costs were for reacidified wastes in 6-in.-dia vessels at 5.0×10^{-2} mill/kwh_e, and the lowest costs were for acidic wastes in 24-in.-dia vessels. Seven years' decay is necessary in order to use 24-in.-dia vessels with acidic wastes.

Table 11. Total Costs of Pot Calcination for Various Combinations of Waste Types, Vessel Sizes, and Decay Times

Time Since Reactor Discharge	Costs, mills/kwh$_e$								
	6-in.-dia Purex 6-in.-dia Thorex	6-in.-dia Purex 12-in.-dia Thorex	6-in.-dia Purex 24-in.-dia Thorex	12-in.-dia Purex 6-in.-dia Thorex	12-in.-dia Purex 12-in.-dia Thorex	12-in.-dia Purex 24-in.-dia Thorex	24-in.-dia Purex 6-in.-dia Thorex	24-in.-dia Purex 12-in.-dia Thorex	24-in.-dia Purex 24-in.-dia Thorex
	Acidic Purex - Acidic Thorex								
120 days	-	-	-	-	-	-	-	-	-
1 year	1.61×10^{-2}	-	-	-	-	-	-	-	-
3 years	1.61×10^{-2}	1.24×10^{-2}	-	1.35×10^{-2}	0.98×10^{-2}	-	-	-	-
10 years	1.60×10^{-2}	1.24×10^{-2}	1.17×10^{-2}	1.35×10^{-2}	0.98×10^{-2}	0.91×10^{-2}	1.30×10^{-2}	0.93×10^{-2}	0.87×10^{-2}
30 years	1.59×10^{-2}	1.23×10^{-2}	1.16×10^{-2}	1.34×10^{-2}	0.97×10^{-2}	0.90×10^{-2}	1.30×10^{-2}	0.93×10^{-2}	0.87×10^{-2}
	Acidic Purex - Acidic Thorex Glass								
120 days	-	-	-	-	-	-	-	-	-
1 year	2.21×10^{-2}	-	-	-	-	-	-	-	-
3 years	2.21×10^{-2}	-	-	1.96×10^{-2}	-	-	-	-	-
10 years	2.19×10^{-2}	-	-	1.95×10^{-2}	-	-	1.91×10^{-2}	-	-
30 years	2.19×10^{-2}	-	-	1.94×10^{-2}	-	-	1.90×10^{-2}	-	-
	Acidic Purex - Reacidified Thorex								
120 days	-	-	-	-	-	-	-	-	-
1 year	3.86×10^{-2}	2.20×10^{-2}	1.84×10^{-2}	-	-	-	-	-	-
3 years	3.85×10^{-2}	2.19×10^{-2}	1.84×10^{-2}	3.60×10^{-2}	1.94×10^{-2}	1.57×10^{-2}	-	-	-
10 years	3.84×10^{-2}	2.19×10^{-2}	1.84×10^{-2}	3.60×10^{-2}	1.93×10^{-2}	1.56×10^{-2}	3.55×10^{-2}	1.90×10^{-2}	1.53×10^{-2}
30 years	3.83×10^{-2}	2.19×10^{-2}	1.82×10^{-2}	3.59×10^{-2}	1.93×10^{-2}	1.56×10^{-2}	3.55×10^{-2}	1.89×10^{-2}	1.52×10^{-2}
	Acidic Purex - Reacidified Thorex Filled Twice								
120 days	-	-	-	-	-	-	-	-	-
1 year	3.03×10^{-2}	1.86×10^{-2}	1.63×10^{-2}	-	-	-	-	-	-
3 years	3.03×10^{-2}	1.85×10^{-2}	1.62×10^{-2}	2.78×10^{-2}	1.60×10^{-2}	1.37×10^{-2}	-	-	-
10 years	3.02×10^{-2}	1.85×10^{-2}	1.61×10^{-2}	2.77×10^{-2}	1.60×10^{-2}	1.37×10^{-2}	2.73×10^{-2}	1.56×10^{-2}	1.31×10^{-2}
30 years	3.01×10^{-2}	1.84×10^{-2}	1.61×10^{-2}	2.76×10^{-2}	1.59×10^{-2}	1.36×10^{-2}	2.72×10^{-2}	1.55×10^{-2}	1.31×10^{-2}
	Reacidified Purex - Acidic Thorex								
120 days	2.83×10^{-2}	-	-	-	-	-	-	-	-
1 year	2.83×10^{-2}	-	-	1.86×10^{-2}	-	-	-	-	-
3 years	2.83×10^{-2}	2.46×10^{-2}	-	1.86×10^{-2}	1.49×10^{-2}	-	1.66×10^{-2}	1.29×10^{-2}	-
10 years	2.82×10^{-2}	2.45×10^{-2}	2.38×10^{-2}	1.85×10^{-2}	1.49×10^{-2}	1.43×10^{-2}	1.65×10^{-2}	1.28×10^{-2}	1.18×10^{-2}
30 years	2.81×10^{-2}	2.45×10^{-2}	2.38×10^{-2}	1.85×10^{-2}	1.48×10^{-2}	1.42×10^{-2}	1.65×10^{-2}	1.28×10^{-2}	1.18×10^{-2}
	Reacidified Purex - Acidic Thorex Glass								
120 days	3.40×10^{-2}	-	-	-	-	-	-	-	-
1 year	3.39×10^{-2}	-	-	2.46×10^{-2}	-	-	-	-	-
3 years	3.38×10^{-2}	-	-	2.45×10^{-2}	-	-	2.27×10^{-2}	-	-
10 years	3.37×10^{-2}	-	-	2.44×10^{-2}	-	-	2.25×10^{-2}	-	-
30 years	3.36×10^{-2}	-	-	2.43×10^{-2}	-	-	2.24×10^{-2}	-	-
	Reacidified Purex - Reacidified Thorex								
120 days	5.04×10^{-2}	3.42×10^{-2}	3.06×10^{-2}	-	-	-	-	-	-
1 year	5.03×10^{-2}	3.41×10^{-2}	3.05×10^{-2}	4.10×10^{-2}	2.45×10^{-2}	2.09×10^{-2}	-	-	-
3 years	5.02×10^{-2}	3.40×10^{-2}	3.04×10^{-2}	4.10×10^{-2}	2.45×10^{-2}	2.08×10^{-2}	3.90×10^{-2}	2.25×10^{-2}	1.88×10^{-2}
10 years	5.01×10^{-2}	3.40×10^{-2}	3.04×10^{-2}	4.09×10^{-2}	2.44×10^{-2}	2.08×10^{-2}	3.89×10^{-2}	2.24×10^{-2}	1.87×10^{-2}
30 years	5.00×10^{-2}	3.39×10^{-2}	3.03×10^{-2}	4.08×10^{-2}	2.43×10^{-2}	2.07×10^{-2}	3.88×10^{-2}	2.23×10^{-2}	1.87×10^{-2}
	Reacidified Purex - Reacidified Thorex Filled Twice								
120 days	4.22×10^{-2}	3.08×10^{-2}	2.85×10^{-2}	-	-	-	-	-	-
1 year	4.22×10^{-2}	3.07×10^{-2}	2.85×10^{-2}	3.28×10^{-2}	2.11×10^{-2}	1.88×10^{-2}	-	-	-
3 years	4.21×10^{-2}	3.07×10^{-2}	2.85×10^{-2}	3.27×10^{-2}	2.11×10^{-2}	1.88×10^{-2}	3.08×10^{-2}	1.91×10^{-2}	1.69×10^{-2}
10 years	4.20×10^{-2}	3.06×10^{-2}	2.84×10^{-2}	3.27×10^{-2}	2.11×10^{-2}	1.88×10^{-2}	3.07×10^{-2}	1.91×10^{-2}	1.68×10^{-2}
30 years	4.19×10^{-2}	3.05×10^{-2}	2.83×10^{-2}	3.26×10^{-2}	2.10×10^{-2}	1.87×10^{-2}	3.06×10^{-2}	1.90×10^{-2}	1.67×10^{-2}
	Reacidified Purex Filled Twice - Acidic Thorex								
120 days	2.33×10^{-2}	-	-	-	-	-	-	-	-
1 year	2.32×10^{-2}	-	-	1.68×10^{-2}	-	-	-	-	-
3 years	2.32×10^{-2}	1.97×10^{-2}	-	1.68×10^{-2}	1.30×10^{-2}	-	1.56×10^{-2}	1.19×10^{-2}	-
10 years	2.31×10^{-2}	1.96×10^{-2}	1.88×10^{-2}	1.67×10^{-2}	1.30×10^{-2}	1.22×10^{-2}	1.55×10^{-2}	1.18×10^{-2}	1.11×10^{-2}
30 years	2.31×10^{-2}	1.95×10^{-2}	1.88×10^{-2}	1.66×10^{-2}	1.29×10^{-2}	1.22×10^{-2}	1.54×10^{-2}	1.18×10^{-2}	1.11×10^{-2}
	Reacidified Purex Filled Twice - Acidic Thorex Glass								
120 days	2.89×10^{-2}	-	-	-	-	-	-	-	-
1 year	2.89×10^{-2}	-	-	2.27×10^{-2}	-	-	-	-	-
3 years	2.88×10^{-2}	-	-	2.26×10^{-2}	-	-	2.15×10^{-2}	-	-
10 years	2.87×10^{-2}	-	-	2.25×10^{-2}	-	-	2.14×10^{-2}	-	-
30 years	2.86×10^{-2}	-	-	2.24×10^{-2}	-	-	2.13×10^{-2}	-	-
	Reacidified Purex Filled Twice - Reacidified Thorex								
120 days	4.55×10^{-2}	2.92×10^{-2}	2.56×10^{-2}	-	-	-	-	-	-
1 year	4.54×10^{-2}	2.91×10^{-2}	2.55×10^{-2}	3.88×10^{-2}	2.26×10^{-2}	1.89×10^{-2}	-	-	-
3 years	4.52×10^{-2}	2.90×10^{-2}	2.54×10^{-2}	3.88×10^{-2}	2.25×10^{-2}	1.89×10^{-2}	3.80×10^{-2}	2.14×10^{-2}	1.78×10^{-2}
10 years	4.52×10^{-2}	2.89×10^{-2}	2.54×10^{-2}	3.87×10^{-2}	2.24×10^{-2}	1.89×10^{-2}	3.79×10^{-2}	2.13×10^{-2}	1.77×10^{-2}
30 years	4.51×10^{-2}	2.87×10^{-2}	2.53×10^{-2}	3.86×10^{-2}	2.24×10^{-2}	1.88×10^{-2}	3.78×10^{-2}	2.13×10^{-2}	1.77×10^{-2}
	Reacidified Purex Filled Twice - Reacidified Thorex Filled Twice								
120 days	3.73×10^{-2}	2.57×10^{-2}	2.34×10^{-2}	-	-	-	-	-	-
1 year	3.72×10^{-2}	2.57×10^{-2}	2.34×10^{-2}	3.09×10^{-2}	1.92×10^{-2}	1.69×10^{-2}	-	-	-
3 years	3.72×10^{-2}	2.57×10^{-2}	2.33×10^{-2}	3.08×10^{-2}	1.92×10^{-2}	1.69×10^{-2}	2.97×10^{-2}	1.80×10^{-2}	1.57×10^{-2}
10 years	3.70×10^{-2}	2.56×10^{-2}	2.32×10^{-2}	3.07×10^{-2}	1.92×10^{-2}	1.68×10^{-2}	2.96×10^{-2}	1.79×10^{-2}	1.56×10^{-2}
30 years	3.69×10^{-2}	2.54×10^{-2}	2.32×10^{-2}	3.06×10^{-2}	1.91×10^{-2}	1.67×10^{-2}	2.95×10^{-2}	1.79×10^{-2}	1.56×10^{-2}

7.0 REFERENCES

1. R. L. Bradshaw, J. J. Perona, J. T. Roberts and J. O. Blomeke, "Evaluation of Ultimate Disposal Methods for Liquid and Solid Radioactive Wastes Part I. Interim Liquid Storage," ORNL 3128, Aug. 7, 1961.

2. The Second AEC Working Meeting on Fixation of Radioactivity in Stable Solid Media, Minutes of Sept. 27-29, 1960, meeting at Idaho Falls, Idaho, TID-7613.

3. "Chemical Technology Division, Unit Operations Section Monthly Progress Report for June, 1960," ORNL-CF-60-6-11, p. 81.

4. Ibid., for September, 1960, ORNL-CF-60-9-43, p. 53.

5. Ibid., for October, 1960, ORNL-CF-60-10-49, p. 43.

6. J. J. Perona, "The Effects of Internal Heat Generation on Pot Calcination Rates for Radioactive Wastes," ORNL-3163 (in press).

7. M. N. Elliot, J. R. Grover, W. H. Hardwick, and K. D. B. Johnson, "The Disposal of Fission Product Wastes by Incorporation into Glass," AERE-R-3610 (January 1961).

8. "Waste Treatment and Disposal Progress Report for April and May 1961," ORNL-CF-61-7-3.

9. A. P. Litman and C. H. Kearns, Jr., ORNL-CF-59-7-99 (July 22, 1959).

10. E. P. Blizard, "Nuclear Radiation Shielding," Section 7-3 of Nuclear Engineering Handbook, Harold Etherington, Editor, McGraw-Hill, New York, 1958.

11. E. D. Arnold, "Chemical Technology Division Training Program Shielding Lecture Notes," ORNL-CF-58-2-27 (Feb. 11, 1958).

12. J. O. Blomeke and M. F. Todd, "Uranium-235 Fission Product Production as a Function of Thermal Neutron Flux, Irradiation Time, and Decay Time," ORNL-2127 (Aug. 19, 1957).

8.0 Appendix A. EVAPORATOR AND OFF-GAS AREA CALCULATION

A typical normalized curve of the evaporator and off-gas equipment duty requirements for the filling of a single clacination vessel to 90% of its volume is given in Fig. 10. For maximum utilization of the equipment by a number of processing lines, peak loads should be staggered at equal time intervals. For example, a single evaporator and off-gas equipment system for a plant processing reacidified Purex waste is shown to require 1.33 times the peak capacity of a single process line. Plant peak load factors for other waste types are:

Waste Type	Factors
Acidic Purex	1.20
Reacidified Purex Filled Twice	1.56
Acidic Thorex	1.38
Acidic Thorex Glass	3.90
Reacidified Thorex	1.70
Reacidified Thorex Filled Twice	2.20

It may be seen that the larger the fraction of the process cycle which is due to filling the vessel, the higher the peak load factor.

To obtain the peak load factor for a plant processing both a Purex and a Thorex waste, the individual factors were totaled and a coincidence factor of 1.00 was added, in case two process lines should peak at exactly the same time due to mismanagement or maloperation of the plant. Further assumptions were that off-gas equipment for a single process line for any waste type would require 200 sq ft of building area, and that the area required was proportional to the square root of the peak load factor. As an example, the throughput factor for a plant processing acidic Purex and acidic Thorex wastes would be 3.58, and the evaporator and off-gas area required would be $(3.58)^{0.5}(200) =$ 378 sq ft.

9.0 Appendix B. SHIELDING CALCULATIONS

Shielding calculations were made by methods described by Blizard (10) and Arnold (11). The curves of Blomeke (12) were used to obtain gamma-ray source strengths as a function of gamma energy, irradiation time and flux, and decay time after irradiation. The calculations were done by hand after making certain simplifying assumptions and are thought to be reasonably accurate. More detailed machine calculations should be made before an actual plant is

UNCLASSIFIED
ORNL-LR-DWG 59662

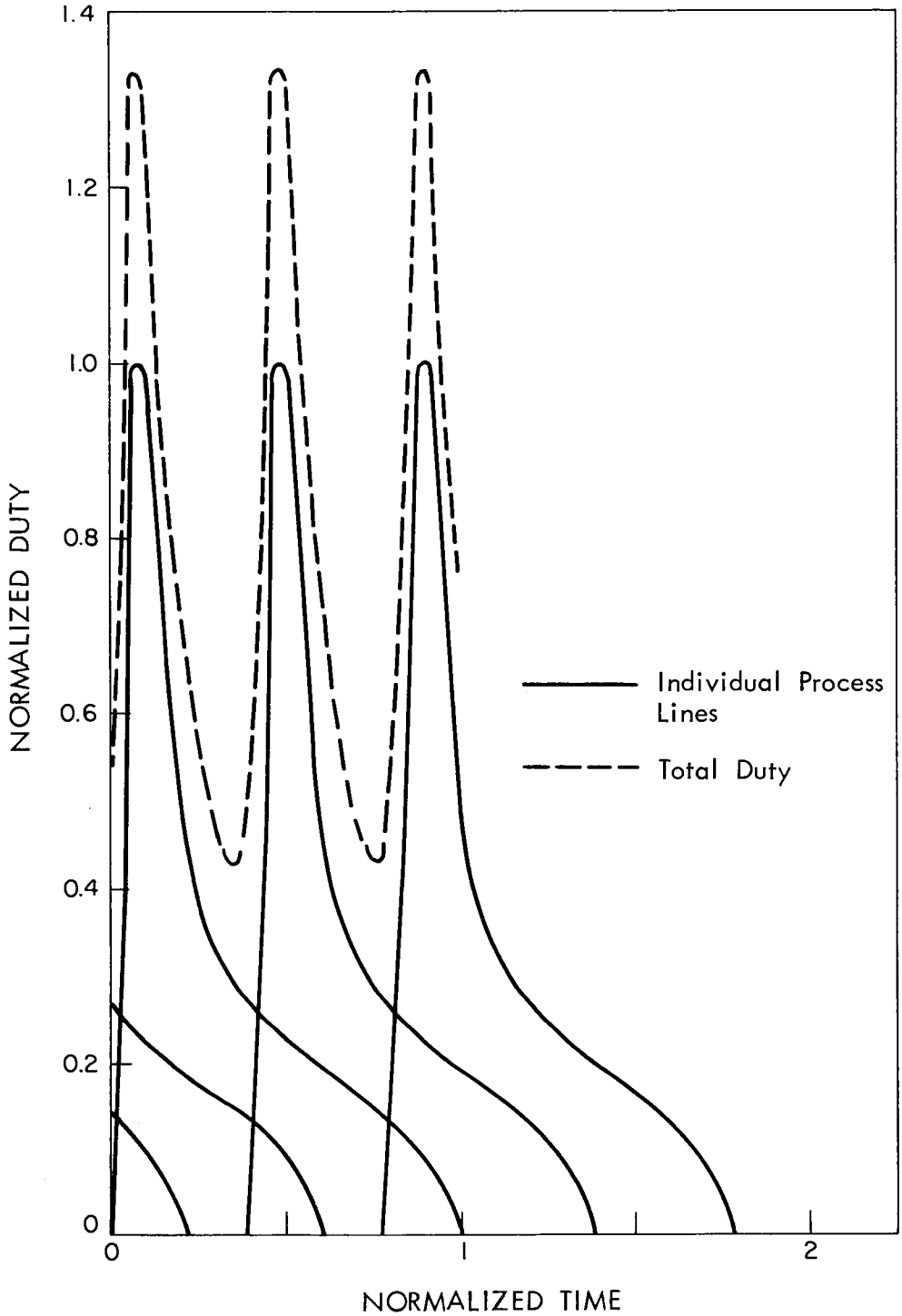

Fig. 10. Normalized evaporator and off-gas equipment duty for processing re-acidified Purex waste.

built, but these were not considered necessary for this study in which relative costs are more important than absolute and in which shielding thickness is not a very important cost variable.

B-1 Concrete Cell Wall Thickness

Source Strength and Geometry. In the assumed waste calcination plant the most concentrated source of gamma radiation would be the testing and decontamination cell. A 3-day holdup of calcined wastes was assumed for this cell (Sect. 5.0). The waste solids resulting from the calcination of acidic Purex and Thorex wastes would be more concentrated radiation sources than solids resulting from neutralized or glass-forming wastes. Large pots of solids are more concentrated radiation sources than small pots. Thus, as a conservative basis, the shielding was calculated for large pots of solids from calcination of acidic wastes.

The largest pots considered in this study are 24 in. dia, filled to 8 ft deep. For acidic Purex waste from processing 1500 tonnes/year of uranium, 58 such pots would be produced per year (Sect. 3.0). For acidic Thorex waste from processing 270 tonnes/year of thorium, 88 such pots would be produced per year. Thus a 3-day holdup would be 0.47 pot of Purex solids and 0.72 pot of Thorex solids, i.e. there would be a Purex pot in the cell 47% of the time and a Thorex pot in the cell 72% of the time. For simplicity in the shielding calculations it was desired to have a single source with a constant source strength equal to the time-averaged source strength of the actual sources. For this purpose a hypothetical 24-in.-dia pot filled 9.5 ft deep with 3 days production of mixed Purex and Thorex waste solids was chosen. This pot was assumed to be sitting against the inner surface of the shield, and the dose rate was calculated at the outer surface. A permissible dose rate of 0.25 mr/hr was assumed, corresponding to only 0.5 r/yr for a 40-hr/wk 50-wk/yr, exposure, i.e. only 10% of the 5 r/yr occupational exposure allowance.

The 24-in.-dia by 9.5-ft-high cylindrical volume source, located at the surface of the shield, was approximated by a 9.5-ft line source, with the same linear source strength as the cylinder, located 6 in. (one-half radius) from the shield surface. This approximation is reasonably good in this case, in which the self-attenuation in the source is fairly small and the attenuation in the shield quite large. A density of 1.0 g/cc was used for the waste solids and a density of 2.35 g/cc for the ordinary concrete shield. The gamma-dose

buildup factor and the gamma attenuation coefficient of the waste solids were assumed to be equal to what they would be for concrete of density 1.0 g/cc.

Gamma source strengths per atom of U-235 originally in the reactor fuel were obtained from ORNL-2127, Vol. 2, Figs. T-1 through T-56a (12), assuming that both the uranium and thorium were irradiated for $\tau = 3 \times 10^7$ sec (approximately 1 year) at a flux of $\phi = 3 \times 10^{13}$ n/cm^{-2}sec^{-1}. The original number of atoms of U-235 per tonne of uranium or thorium was chosen to give an irradiation level of 10,000 Mwd/tonne for the uranium fuel and 20,000 Mwd/tonne for the thorium. This gave $N_o^{25} = 5.1 \times 10^{25}$ atoms/tonne for the uranium fuel and 1.02×10^{26} for the thorium fuel.

Table 12 shows the source strengths for four gamma energy groups, per original atom of U-235, as read from ORNL-2127. The decay times after irradiation shown correspond roughly to 0.3, 1, 3, 10, and 30 years. Effective energies for the gammas of 0.125, 0.67, 1.6, and 2.4 Mev were used for groups I, II, III, and IV, respectively. From these energies, the energy source strength values shown in Table 12 were calculated, giving the gamma source strengths in terms of Mev/sec per tonne of uranium irradiated. The values for thorium would be just twice those shown for uranium.

Group I gammas were found to make a negligible contribution to the shielded dose rate over the range of interest. Group II gammas were found to account for a maximum of about 10% of the total dose rate, and that much only after about 30 years' decay time. The reason for this is, of course, that the softer gammas are more easily shielded and become important only after the shorter lived hard-gamma emitters have died out. The group III gammas were found to control the dose rate in the 30-year calculation, and the group IV gammas in the 0.3-, 1-, 3-, and 10-year calculations.

Table 13 shows the line source strengths used in making the shielding calculations. They were calculated from Table 12 on the basis that all the fission products in 3 days' production (12.3 tonnes of uranium plus 2.1 tonnes of thorium) were uniformly distributed along a 9.5-ft line. The dose at the outer surface of the shield was obtained by integrating the point-source kernel along the line source.

The dose attenuation kernel for a point source in an absorbing medium is

$$S_p B e^{-\mu x}/4\pi x^2$$

Table 12: Gamma Activity in Irradiated Fuel

Irradiation time, τ: 3×10^{7} sec

Flux, ϕ: 3×10^{13} n/cm^{-2}sec^{-1}

Time after shutdown, t: as shown

Group	Gamma Energy Range, Mev	γ Activity				
		$t = 1 \times 10^{7}$ sec	$t = 3 \times 10^{7}$ sec	$t = 1 \times 10^{8}$ sec	$t = 3 \times 10^{8}$ sec	$t = 1 \times 10^{9}$ sec
		d/sec per original atom U-235				
I	0-0.25	3.7×10^{-10}	1.1×10^{-10}	1.9×10^{-11}	1.7×10^{-12}	5.0×10^{-14}
II	0.25-1.0	1.0×10^{-9}	2.8×10^{-10}	2.7×10^{-11}	1.2×10^{-11}	1.0×10^{-11}
III	1.0-1.7	1.3×10^{-11}	2.9×10^{-12}	1.1×10^{-12}	3.4×10^{-13}	6.0×10^{-14}
IV	<1.7	5.0×10^{-12}	1.7×10^{-12}	4.0×10^{-13}	2.7×10^{-14}	$\ll 10^{-16}$
	Effective Gamma Energy, Mev	Mev/sec per tonne U				
II	0.67	3.4×10^{16}	9.4×10^{15}	9.4×10^{14}	4.1×10^{14}	3.4×10^{14}
III	1.6	1.1×10^{15}	2.4×10^{14}	9.0×10^{13}	2.7×10^{13}	5.0×10^{12}
IV	2.4	6.2×10^{14}	2.1×10^{14}	4.8×10^{13}	3.4×10^{12}	$\ll 1.2 \times 10^{10}$

Table 13: Effective Line Source Strengths Used in Shielding Calculations

Hypothetical source: 24-in.-dia cylinder, 9.5 ft long, containing 3 days' production of mixed Purex and Thorex waste solids (from processing 12.3 tonnes uranium plus 2.1 tonnes thorium)

Group	Effective Energy, Mev	Strengths Used, Mev cm^{-1} sec^{-1}				
		$t = 1x10^7$ sec	$t = 3x10^7$ sec	$t = 1x10^8$ sec	$t = 3x10^8$ sec	$t = 1x10^9$ sec
III	1.6	6.2×10^{13}	1.4×10^{13}	5.1×10^{12}	1.5×10^{12}	2.8×10^{11}
IV	2.4	3.5×10^{13}	1.2×10^{13}	2.7×10^{12}	1.9×10^{11}	$\ll 6.8 \times 10^{8}$

where B = dose attenuation factor, a function of μx, dimensionless

μ = attenuation coefficient, a function of gamma energy and shield composition and density, cm^{-1}

x = distance from source, cm

S_p = point source strength, photons/sec or Mev/sec

In order to make easier the integration of this kernel over a line source, $Be^{-\mu x}$ was replaced by $B^* e^{-\mu^* x}$,

where B^* = modified dose buildup factor, a constant

μ^* = modified attenuation coefficient, cm^{-1}

Values of B^* and μ^* were obtained empirically by plotting ln $Be^{-\mu x}$ vs x and fitting a straight line approximation to the curve. Figure 11 shows $Be^{-\mu x}$ as a function of x for ordinary concrete of density 2.35 g/cc. Values of B were calculated from the equation given in reference 1, pp. 7-99,

$$B(\mu x) = Ae^{-\alpha_1 \mu x} + (1 - A)e^{-\alpha_2 \mu x}$$

with values of μ, A, α_1 and α_2 interpolated from the table on pp. 7-100 of this reference. These values are shown in Table 14, as are also the empirical values of B^* and μ^* obtained. The modified self-attenuation coefficient for the waste solids, μ_c^*, was taken to be equal to $\mu^*/2.35$.

Table 14. Values of Coefficients Used in Shielding Calculations

Coefficient	0.66 Mev γ Energy	1.6 Mev γ Energy	2.4 Mev γ Energy
A	11.7	7.45	5.5
α_1	-0.10	-0.0735	-0.064
α_2	0.16	0.050	0.064
μ/	0.078	0.049	0.040
μ	0.183	0.115	0.094
μ_c	0.078	0.049	0.040
μ^*	0.159	0.105	0.086
μ_c^*	0.067	0.043	0.037
B^*	5.40	4.96	3.73
Energy flux, mev sec^{-1}-cm^{-2} for unit tissue dose of 1 mr/hr	5.4×10^2	6.4×10^2	7.3×10^2

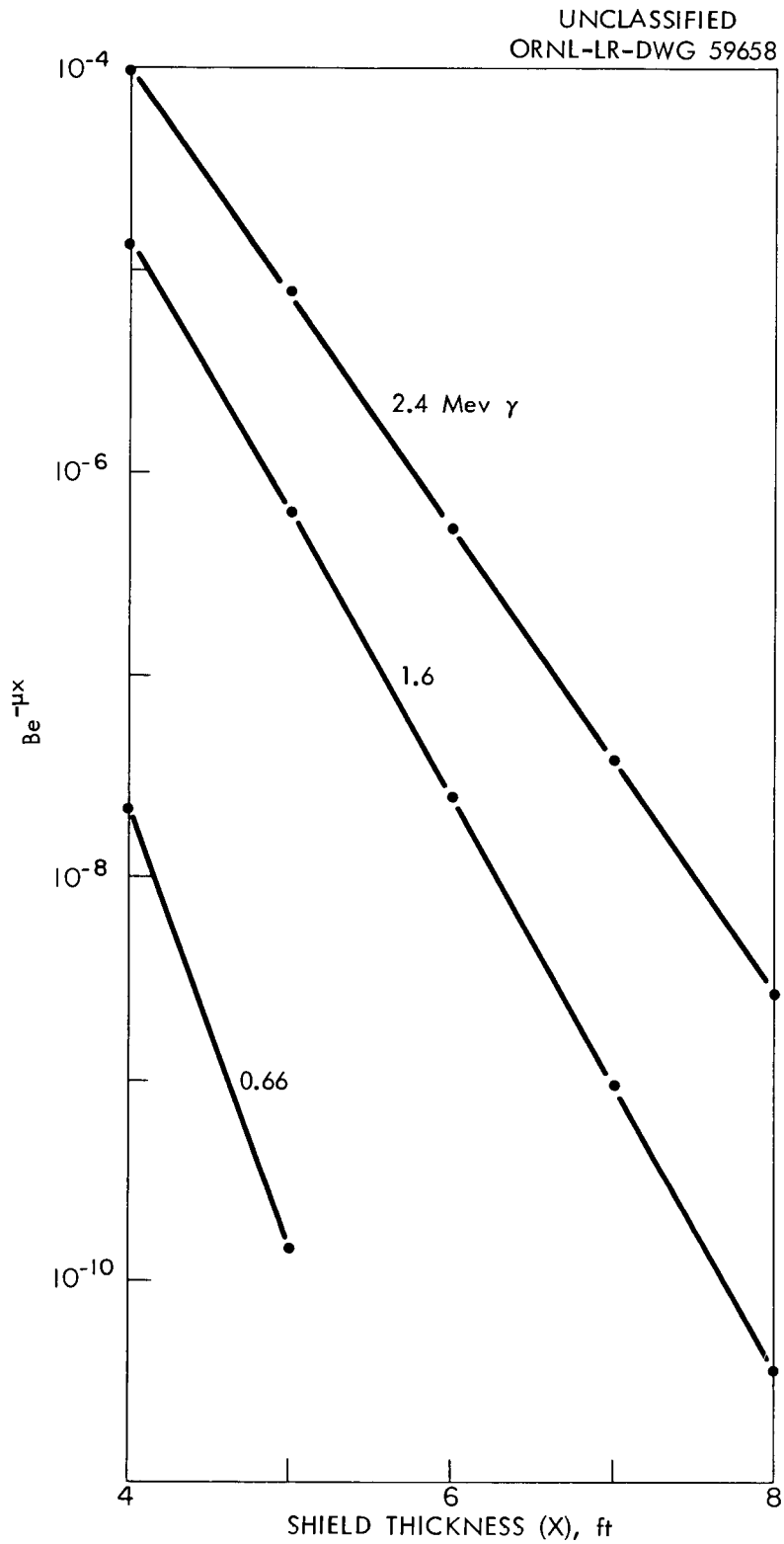

Fig. 11. Point-source gamma attenuation factors for concrete shielding. For ordinary concrete $\rho = 2.35$ g/cc.

Integrating the modified point-source kernel to get the dose at a point located a distance x from the center of a line source of half-length Y gives

$$\frac{S_L B^*}{2\pi} \int_{y=0}^{y=Y} \frac{e^{-\mu^*\sqrt{x^2 + y^2}}}{x^2 + y^2} dy$$

where S_L = line source strength, photons cm^{-1} sec^{-1} or Mev cm^{-1} sec^{-1}

y = variable of integration

This integral can be simplified to

$$\frac{S_L B^*}{2\pi x} \int_0^{\theta} e^{-\mu^* x \sec \sigma} d\sigma$$

where θ = arctan (Y/x)

σ = variable of integration

The integral in this form is known as the function $F(\theta,\mu^*x)$, values of which are presented graphically in reference 1, pp. 7-103, and in reference 2, pp. 65-70. The latter graphs were used in this calculation since they can be read more precisely. Thus, the shielding calculations were made by

$$\Gamma = \frac{S_L B^*}{2\pi(t_c + t)} F(\theta, \mu_c^* t_c + \mu^* t)$$

where Γ = maximum energy flux at outer surface of shield, Mev cm^{-2} sec^{-1}

S_L = line source strength, Mev cm^{-1} sec^{-1}

θ = arctan $(Y/t_c + t)$

Y = 145 cm (half of 9.5 ft)

t_c = self-absorption distance of cylindrical source of ~16 cm (approximately half of 12 in.)

t = thickness of shield, cm

S_L = values from Table 13

The calculations were done separately for gamma groups III and IV for shield thicknesses of 4, 5, 6, 7, and 8 ft. The energy fluxes were divided by the appropriate energy flux corresponding to a unit tissue dose of 1 mr/hr (Table 14), and added together to convert the results to total dose rate at the outer surface of the shield. The dose rate as a function of shield thickness and decay time is shown in Fig. 12. These results are cross-plotted in Fig. 13 to show the thickness of shield required as a function of decay time for dose rates of 0.25 and 2.5 mr/hr. The 0.25 mr/hr values were used for cost estimation purposes after adding a safety factor of about 0.4 ft.

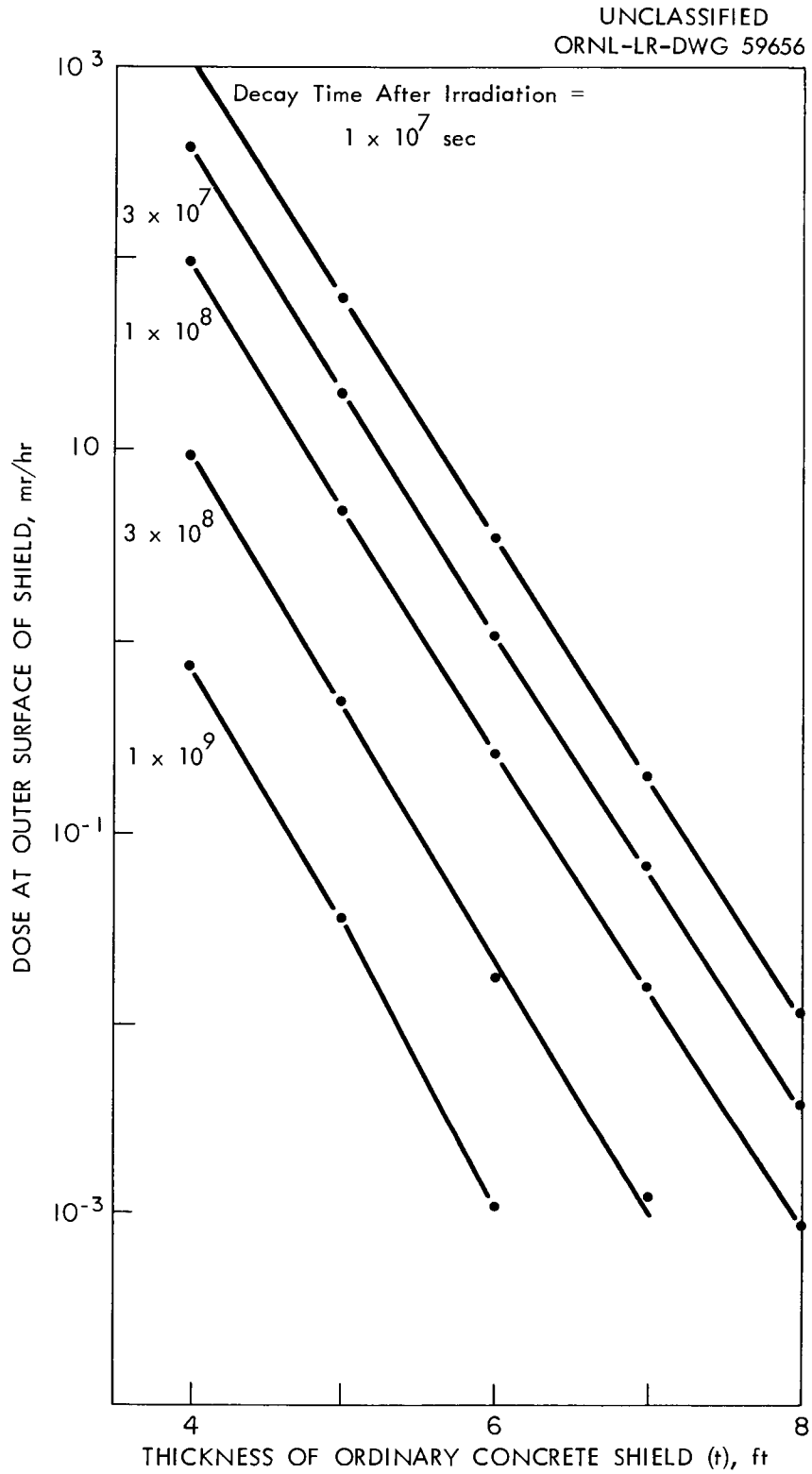

Fig. 12. Dose rate as a function of shield thickness and decay time. For ordinary concrete $\rho = 2.35$ g/cc.

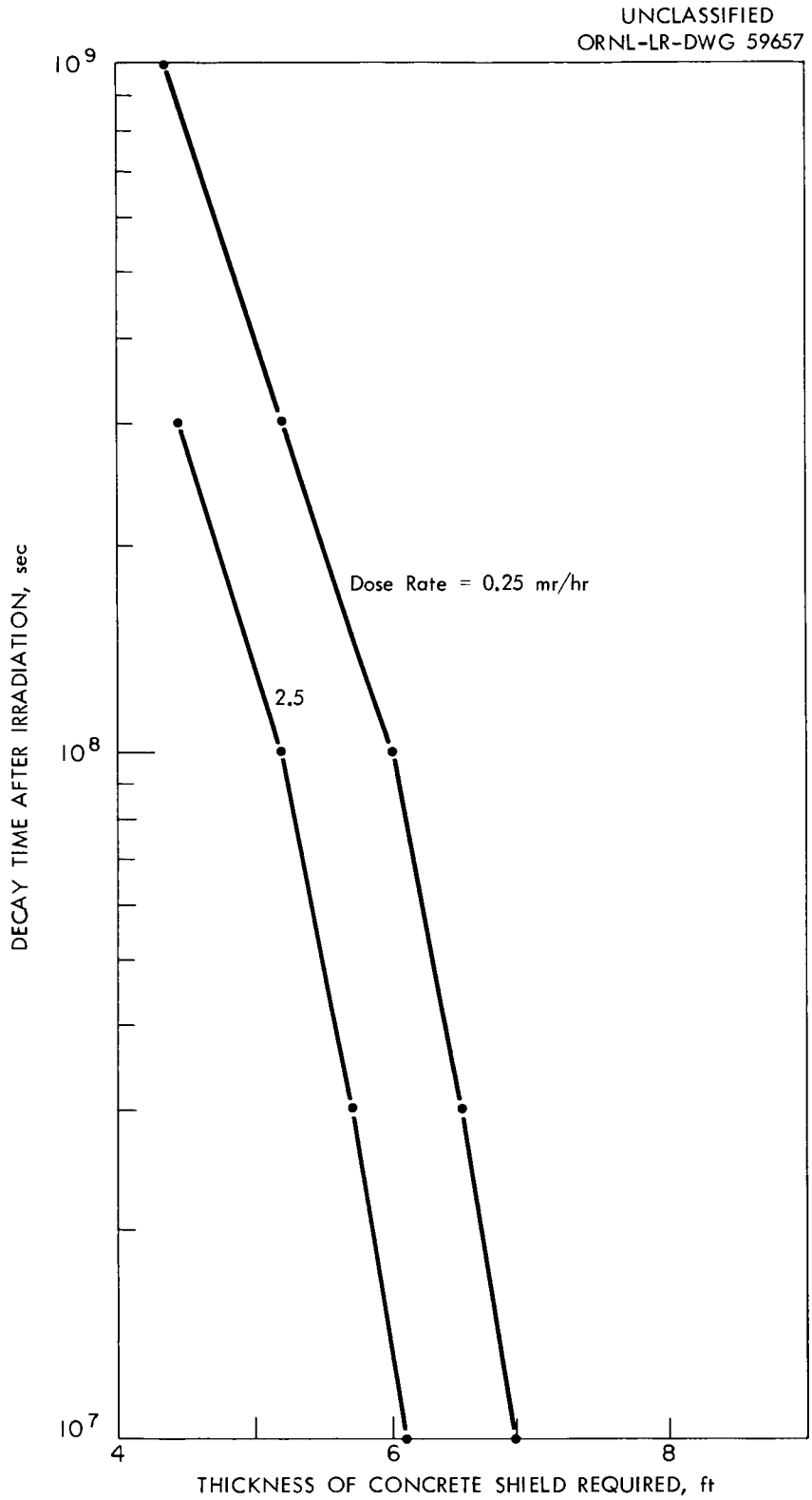

Fig. 13. Shield thickness required as a function of decay time and permissible dose rate.

ORNL-3192
UC-70 — Waste Disposal and Processing
TID-4500 (16th ed.)

INTERNAL DISTRIBUTION

1. Biology Library
2-3. Central Research Library
4. Reactor Division Library
5. ORNL — Y-12 Technical Library
Document Reference Section
6-25. Laboratory Records Department
26. Laboratory Records, ORNL R.C.
27. E. D. Arnold
28. S. I. Auerbach
29-30. R. E. Blanco
31. J. O. Blomeke
32. W. J. Boegly, Jr.
33. G. E. Boyd
34-36. R. L. Bradshaw
37. C. E. Breckinridge
38. J. C. Bresee
39. K. B. Brown
40. F. R. Bruce
41. T. H. J. Burnett
42. C. E. Center
43. W. E. Clark
44. W. B. Cottrell
45. K. E. Cowser
46-47. F. L. Culler
48. W. de Laguna
49. L. C. Emerson
50. F. M. Empson
51. M. F. Fair
52. D. E. Ferguson
53. J. H. Frye, Jr.
54. J. H. Gillette
55. H. W. Godbee
56. H. E. Goeller
57. A. T. Gresky
58. W. R. Grimes
59. C. E. Guthrie
60. C. W. Hancher
61. C. S. Harrill
62. A. Hollaender
63. L. B. Holland
64. J. M. Holmes
65. A. S. Householder
66. D. G. Jacobs
67. R. G. Jordan (Y-12)
68. W. H. Jordan
69. M. T. Kelley
70. J. A. Lane
71. T. A. Lincoln
72. S. C. Lind
73. R. S. Livingston
74. K. Z. Morgan
75. R. J. Morton
76. J. P. Murray (K-25)
77. M. L. Nelson
78-79. J. J. Perona
80. D. Phillips
81. M. L. Randolph
82. R. M. Richardson
83-84. J. T. Roberts
85. H. E. Seagren
86. M. J. Skinner
87. W. S. Snyder
88. W. G. Stockdale
89-113. E. G. Struxness
114. J. C. Suddath
115. J. A. Swartout
116. T. Tamura
117. E. H. Taylor
118. J. W. Ullmann
119. W. E. Unger
120. A. M. Weinberg
121. M. E. Whatley
122. C. E. Winters
123. R. G. Wymer
124. J. W. Youngblood
125. D. L. Katz (consultant)
126. C. E. Larson (consultant)
127. I. Perlman (consultant)
128. J. H. Rushton (consultant)
129. H. Worthington (consultant)
130. T. H. Pigford (consultant)
131. J. C. Frye (consultant)
132. W. H. Langham (consultant)
133. G. M. Fair (consultant)
134. R. E. Zirkle (consultant)
135. L. S. Taylor (consultant)
136. R. L. Platzman (consultant)

EXTERNAL DISTRIBUTION

137. J. I. Stevens, ICPP
138. B. M. Legler, ICPP
139. James A. Buckham, ICPP
140. C. M. Slansky, ICPP
141. C. P. Straub, Public Health Service, Robert A. Taft, Sanitary Engineering Center, Cincinnati, Ohio
142. Physics and Engineering Group, Balcones Research Center, RFD 4, Box 189, Austin, Texas
143. Vanderbilt University (Physics Library)
144. University of California (Gerhard Klein)
145. H. Le Grande, U.S. Geological Survey, Box 433, Albuquerque, N.M.
146. John I. Hopkins, Davidson College, Dept. of Physics, P. O. Box 327, Davidson, North Carolina
147-151. Division of Reactor Development, AEC, Washington (1 copy each to J. A. Lieberman, Arnold Joseph, Water Bettis, David Costello, and H. Bernard)
152. C. Orr, Georgia Institute of Technology, Atlanta, Georgia
153. E. F. Gloyna, Dept. of Civil Eng., University of Texas, Austin, Texas
154. A. A. Schoen, Biology Division, USAEC, Oak Ridge
155. D. W. Pierce, Manager, Chemical Effluents Technology, Chemical Research and Development, General Electric Co., HAPO, Richland, Washington
156-157. Hanford Atomic Products Operation (1 copy each to L. P. Bupp and E. Irish)
158. Leslie Silverman, Industrial Engineering, Department of Industrial Hygiene, School of Public Health, Harvard University, 55 Shattuck Street, Boston 15, Mass.
159. W. R. Thurston, Executive Secretary, Division of Earth Sciences, National Academy of Sciences, National Research Council, Washington
160. C. S. Shoup, Biology Division, USAEC, Oak Ridge
161. J. A. McBride, IDO
162. E. L. Anderson, AEC, Washington
163. J. Vanderryn, Oak Ridge, AEC
164. C. E. Dady, Watertown Arsenal, Ordnance Materials Research Office, Watertown 72, Mass.
165. R. D. Nininger, Assistance Director for Exploration, Division of Raw Materials, U.S. Atomic Energy Commission, Washington 25, D.C.
166. D. L. Everhart, Geological Advisor, Division of Raw Materials, U.S. Atomic Energy Commission, Denver Federal Center, Building 40, Denver
167. Manager, Grand Junction Operations Office, U.S. Atomic Energy Commission, Grand Junction, Colo.
168. S. Allen Lough, Division of Biology and Medicine, USAEC, Washington
169. James E. Turner, Division of Biology and Medicine, USAEC, Washington
170. Carnick A. Markarian, Captain USAF, MSC, Director
171. Division of Research and Development, AEC, ORO
172-758. Given distribution as shown in TID-4500 (16th ed.) under Waste Disposal and Processing category (75 copies – OTS)