MARTIN MARIETTA ENERGY SYSTEMS LIBRARIES
3 4456 0286814 5

ORNL-3070
UC-4 — Chemistry

A REVIEW OF GLOVE BOX CONSTRUCTION AND EXPERIMENTATION

C. J. Barton

OAK RIDGE NATIONAL LABORATORY
CENTRAL RESEARCH LIBRARY
DOCUMENT COLLECTION
LIBRARY LOAN COPY
DO NOT TRANSFER TO ANOTHER PERSON
If you wish someone else to see this document, send in name with document and the library will arrange a loan.

OAK RIDGE NATIONAL LABORATORY
operated by
UNION CARBIDE CORPORATION
for the
U.S. ATOMIC ENERGY COMMISSION

LEGAL NOTICE

This report was prepared as an account of Government sponsored work. Neither the United States, nor the Commission, nor any person acting on behalf of the Commission:

A. Makes any warranty or representation, expressed or implied, with respect to the accuracy, completeness, or usefulness of the information contained in this report, or that the use of any information, apparatus, method, or process disclosed in this report may not infringe privately owned rights; or

B. Assumes any liabilities with respect to the use of, or for damages resulting from the use of any information, apparatus, method, or process disclosed in this report.

As used in the above, "person acting on behalf of the Commission" includes any employee or contractor of the Commission, or employee of such contractor, to the extent that such employee or contractor of the Commission, or employee of such contractor prepares, disseminates, or provides access to, any information pursuant to his employment or contract with the Commission, or his employment with such contractor.

ORNL-3070

Contract No. W-7405-eng-26

REACTOR CHEMISTRY DIVISION

A REVIEW OF GLOVE BOX CONSTRUCTION AND EXPERIMENTATION

C. J. Barton

DATE ISSUED

MAY 3 1 1961

OAK RIDGE NATIONAL LABORATORY
Oak Ridge, Tennessee
operated by
UNION CARBIDE CORPORATION
for the
U.S. ATOMIC ENERGY COMMISSION

MARTIN MARIETTA ENERGY SYSTEMS LIBRARIES

3 4456 0286814 5

Abstract

A series of fires and explosions in U. S. Atomic Energy Commission facilities handling α-active materials during the last five years has resulted in reconsideration of safety problems associated with glove boxes and other equipment used to contain these materials. The literature on construction and operation of glove boxes for work with toxic inorganic materials not requiring biological shielding is reviewed as a contribution to this re-examination, with special emphasis on methods and equipment for working safely with plutonium and other α-active materials. An effort is made to point out the direction of current trends in this field. Detailed discussions of glove box designs and methods of experimentation in these enclosures are not included in this report but sufficient information is furnished to enable the reader to decide where to find needed details in the referenced material. Methods for the detection and measurement of α-active materials and of impurities in controlled atmospheres are discussed. In addition, the literature on controlled atmosphere enclosures, glove boxes for non-toxic inorganic materials, and the technique of experimenting with such enclosures is reviewed. It is hoped that this review will help to orient newcomers in the field of glove box experimentation and also be of service to those already in the field by providing a broad, although undoubtedly incomplete, view of the literature. Some previously unpublished developments which have been brought to the attention of the writer, principally by experimenters at the Oak Ridge National Laboratory, are reported here.

I. Introduction

II. Glove Boxes and Auxiliary Equipment for Handling Toxic Materials

1. Introductory comments

2. Glove box construction

A. Wall and floor materials

(1) Flexible plastic materials

(2) Rigid plastic materials

(3) Plywood

(4) Stainless steel

(5) Mild steel

(6) Aluminum

(7) Fiberglass reinforced plastic

(8) Summary

B. Protective coatings

C. Window materials

(1) Lucite and Plexiglas

(2) CR-39

(3) Homalite

(4) Cobex

(5) Safety glass

(6) Summary

D. Doors and locks

E. Gloves, glove ports and glove port closures

(1) Permeation of gases through glove materials

(2) Glove materials and design

(3) Glove ports and glove port closures

20

F. Assembly methods

(1) Frame and panels

(a) Gaskets

(2) Shell

(3) Double skin boxes

(4) Cylindrical glove boxes

G. Commercial glove boxes

H. Glove box assemblages

3. Filters and scrubbers

A. Filter and scrubber construction and use

B. Filter efficiency

C. Filter mounting and changing

4. Exhaust systems

A. Individual box exhaust

B. Fan exhaust for groups of boxes

C. Pressure measurement and control in sub-atmospheric pressure glove boxes

III. Laboratory Design

IV. Experimentation with Toxic Materials

1. Introductory comments

2. Technique of glove box operation

A. Glove change methods

(1) Single clamp

(2) Glove bead and clamp

(3) Clamp and O-ring

(4) One O-ring

(5) Two O-rings

(6) Two clamps

B. Transfer techniques

(1) Air locks

(2) Sphincter valves

(3) Ice-cream carton

(4) Plastic bag

C. Housekeeping and waste disposal

D. Decontamination

E. Dealing with glove box emergencies

(1) Fires and explosions

(2) Spills

(3) Criticality

F. Monitoring for escape of α-activity

(1) Gloves and other surfaces

(2) Air

(3) Personnel

G. Monitoring for external radiation

H. Laboratory clothing

3. Experimentation in glove boxes

A. Weighing

B. Heating

C. Centrifuging

D. Polarography

E. pH measurements and potentiometric titrations

F. Solvent extraction and ion exchange

G. Vacuum systems

H. Preparation of X-ray diffraction samples

I. Optical microscopy

J. Fluorination and hydrofluorination

K. Chlorination

L. Spectrophotometry

M. Spectrographic analysis

N. Thermal analysis

O. Calorimetry

Q. Density and viscosity measurements

R. Metal production

S. Electromagnetic separation of isotopes

T. Using burets and pipets

U. Miscellaneous techniques

V. Controlled Atmosphere Enclosures for Non-Toxic Materials

1. Introductory comments

2. Construction of non-commercial enclosures

A. Plastic bag enclosures

B. Glass enclosures

C. Metal boxes

3. Drying agents and purification systems

4. Techniques

A. Detection and measurement of gaseous impurities

(1) Qualitative tests

(2) Quantitative measurements

(a) Moisture

(b) Oxygen

B. Initial operation of inert atmosphere glove boxes

C. Leak testing

D. Introduction and removal of materials and equipment

E. Weighing in a dry atmosphere

F. Pressure control in atmospheric pressure glove boxes

A Review of Glove Box Construction and Experimentation

I. Introduction

There are two principal reasons for conducting chemical experiments in glove boxes. The first, historically, is to permit chemical manipulations with moisture or oxygen sensitive materials in a controlled atmosphere and the second is to protect the experimenter from exposure to radioactive or other types of toxic materials, which is usually accomplished by use of enclosures operated below atmospheric pressure to minimize the liklihood of movement of the toxic materials into the laboratory through small leaks. Although an overlap sometimes exists between these two purposes, as in the handling of plutonium metal in an inert atmosphere, glove box requirements and practices for experiments with non-toxic and highly toxic materials are sufficiently diverse to justify the division of the subject on this basis adopted for this discussion. Some features of glove boxes which are common to enclosures employed for both types of materials are discussed under only one heading. An excellent compilation of papers edited by Walton on methods of handling radioactive materials and on equipment designed for this purpose and reviews of plutonium handling practices by Steindler and by Shuck were published recently but a review of glove box use for handling both toxic and non-toxic materials has not previously appeared. Plutonium is mentioned frequently in the discussion of facilities and techniques for handling materials because the large number of publications on these subjects reflects the importance of this element. Facilities which are safe for experiments with plutonium are, in general, safe for work with other α-emitters and toxic, non-radioactive materials.

Glove boxes have been used in chemical laboratories for many years for experiments requiring operations in a dry atmosphere.* In fact, this usage of

---

*This statement cannot be documented at present. A search of the literature would seem to indicate that early dry box users either did not bother to describe their enclosures or that their descriptions were unnoticed by contemporary literature abstractors.

glove boxes has been so widespread that many workers refer to all glove boxes as dry boxes. However, the large increase in use of glove boxes during the last two decades has been principally due to the necessity of confining radioactive materials in a restricted working space rather than to the need of a dry atmosphere. The growing importance of beryllium, for which limits of air-borne material comparable to those of α-emitters have been established, emphasizes the need of enclosures for the safe handling of non-radioactive toxic materials. A need has also developed in recent years for glove boxes to facilitate safe experimentation with toxic biological materials such as viruses. Enclosures designed for this purpose are beyond the scope of this review.

Prior to the last few years, experimenters requiring glove boxes designed their own boxes. This was true both of small scale users and installations requiring large numbers of boxes which had their own shop facilities available to fabricate different types of boxes. More recently, there has been a growing tendency to employ commercially-built glove boxes. This has been due in part to rapidly increasing availability of well-built boxes at reasonable prices and to growing recognition of the fact that most glove box operations can be adapted to use of a relatively few standard design boxes. It is strongly recommended that anyone contemplating beginning glove box operations carefully consider the merits and prices of glove boxes offered by commercial producers before deciding whether they should build their own glove box or boxes.

Glove box materials generally supply adequate protection from the radiation emitted by α-active elements but this is something which should not be taken for granted. Techniques and equipment for working with β- and γ-active materials requiring biological shielding are excluded from this review. Coverage of the voluminous literature on handling α-active materials is designed to provide a representative view of the field rather than for completeness. Some publications on the metallurgy of plutonium describe techniques which may be useful in chemical experimentation and are included in the discussion.

II. Glove Boxes and Auxiliary Equipment for Handling Toxic Materials

1. Introductory Comments

A review of the literature on glove boxes employed for work with α-active materials, as compared to those designed for experimentation with non-toxic materials discussed in Section V, reveals the rather startling fact that those in the latter category are all made of non-flammable materials while many of those constructed for work with plutonium metal and plutonium compounds are made of flammable materials such as plywood and Lucite. The desire to meet the need of a large number of glove boxes as economically as possible through use of these cheap, readily available, and easily worked materials is understandable, but in hindsight, it appears to be an unwise choice when the boxes are to be used for operations with materials which are highly toxic and, in some cases, pyrophoric. There has been a wide diversity in glove box design and construction in U.S. Atomic Energy Commission installations due to the fact that no design criteria have been established for glove boxes employed with α-emitting materials. Designers at the different sites have been free to choose materials for the construction of glove boxes according to their own individual estimate of the hazards involved in their use and it is evident that differences of opinion exist. British glove box designs have been influenced to some extent by the belief that some maintenance operations on contaminated boxes and equipment are best performed in contaminated areas by men completely enclosed in protective suits.

In retrospect, it appears that the hazards resulting from fire and explosion in U.S. AEC α-handling facilities were not adequately assessed until a series of incidents in plutonium facilities reported in USAEC Serious Accident and Safety Reports convincingly demonstrated the need of further, careful consideration of the problem. This has resulted in a definite trend in the U.S. toward replacing flammable glove boxes and associated equipment such as filters with

more fire resistant materials and toward providing secondary containment facilities. Another result was the appointment of an AEC glove box committee, including representatives from AEC installations handling significant quantities of α-active materials, to gather information on glove box construction and practices and to bring recommendations on possible ways of improving the safety of glove box operations. None of the committee's findings have yet been published.

It should be pointed out that materials of construction are not the only factors affecting the safety of glove box enclosures and that, just as making boxes out of non-flammable materials does not automatically make operations performed in them safe, inclusion of flammable materials of construction in such enclosures does not necessarily mean that they are unsafe when employed under certain restricted conditions by qualified personnel. Establishment of proper operating and emergency procedures and training to assure that operating personnel are thoroughly familiar with these procedures are at least as important as type of construction material.

Health Physics aspects of experimentation with plutonium are discussed by Steindler, Bennellick, Kelman, et al., Dunster and Bennellick, and Shuck. Broader aspects of the problem of handling radioactive materials and techniques of radiation monitoring are reviewed by Morgan. Perhaps it will suffice to point out here that the maximum permissible body burden for Pu^{239} (0.04 μc) listed in U.S. Dept. of Commerce NBS Handbook 69, is equivalent to a sphere of PuO_2 approximately 55 microns in diameter while a similar calculation for Po^{210} indicates that a sphere of PoO_2 1.2 microns in diameter would supply the permissible body burden of this α-emitter. This should make it clear why great care is needed in the handling of these toxic materials. It is known that a much larger fraction of the plutonium taken into the body through inhalation

is retained in the body than that which is ingested, emphasizing the need of controlling or eliminating air-borne plutonium. Experiments performed at Argonne National Laboratory have demonstrated that microgram quantities of plutonium in wounds cause tumors in the wound sites, which indicates that great care needs to be observed to avoid breaking the skin with contaminated objects.

There appears to be a definite lack of agreement among experimenters as to the amount of plutonium permitted to be handled in open-front hoods. This disagreement is due in part to the fact that two important factors in the decision, technical competence of personnel and relative hazards of different types of manipulation, cannot be evaluated objectively. British practice reported by Dunster provides a reasonable basis of choice based on experience at Harwell in handling plutonium. He indicates that 10 millicuries for wet operations and 100 microcuries for dry operations are the maximum amounts of plutonium that should be handled in open-front hoods. (Approximately 160 and 1.6 mg of Pu^{239}, respectively). Discussion of this type of equipment and its use is considered beyond the scope of this review but it is the belief of the writer that the likelihood of accidental release of activity in the laboratory and of personnel contamination is much greater for hoods than for glove boxes in spite of the high air velocities customarily employed for hoods (120-150 lfm).

Because of the low permissible limits for air-borne α-activity listed in NBS Handbook 69, enclosures designed for such materials are nearly always operated at a lower pressure than that of the laboratory so that in case of leaks, which are considered inevitable, air-borne particles are unlikely to escape into the laboratory. Some experimenters have felt that because of the practice of keeping glove boxes under a negative pressure, it is not essential to have leak-tight enclosures. However, Kelman, et al., appear to express the

opinion of the majority of the workers in this field that the increased margin of safety provided by a tight enclosure in case of accidental loss of negative pressure more than compensates for the extra effort required to obtain leak-tightness.

2. Glove Box Construction

A. Wall and floor materials

(1) Flexible plastic materials

The ease with which thin plastic materials can be perforated has not encouraged extensive use of this type of material in glove box construction. A collapsible glove box consisting of a 20-mil thick polyvinyl chloride bag attached to a rigid plastic front panel and supported by a jointed metal frame is reported by Welsher. The principal advantage of this type of enclosure lies in the fact that it occupies very little space when not in use. It is recommended for low activity work such as the cleaning of lightly contaminated equipment and obviously should not be used for operations with larger amounts of α-activity without a secondary means of containment, e. g., an open-front hood with an adequate air flow rate. An enclosure of this type shown in Figure 1, is reported by Massey to be in use at the Oak Ridge National Laboratory for handling small amounts of α- and weak β-emitters in an argon atmosphere. Materials, equipment, and any needed tools are introduced through a circular opening in the bottom of the bag which is then sealed with a round piece of Lucite having a groove in its circumference. A rubber O-ring seated in the groove around the edges of the bag opening completes the seal. The bag is deflated around its contents to force air out through a tube cemented in the bag wall and then inflated with argon. These operations are repeated to obtain an inert atmosphere. Manipulations are performed in the box by use of gloves cemented to plastic sleeves which are, in

turn, cemented to the bag wall. When these low-cost enclosures, which are fabricated locally from plastic barrel liners, become contaminated, they are deflated and placed in active waste containers for burial. Commercial enclosures of this type, called isolation chambers, are made by the Synder Manufacturing Company, Inc.

(2) Rigid plastic materials

Lucite, Plexiglas, and similar plastics of varying thicknesses have been widely used for both wall and window materials because they are easily machined and lend themselves readily to low cost construction. However, it may be expected that future use of materials of this type, at least in the U.S., will be limited to low-activity enclosures having little or no fire hazard. Bakelite panels employed in a French installation and welded plastic enclosures at the same location are described by Grison and Pascard.

(3) Plywood

The low cost, ready availability and ease of construction afforded by plywood has led to widespread use of this material in glove boxes, often in conjunction with plastic windows. Garden stated in 1951 that there were over 400 Berkeley type boxes in the U.S. and apparently most of these were made of plywood and plastic. Application of suitable paints and other coating materials increases the durability and ease of decontamination of plywood. Kaulitz and Roake describe plywood boxes used at Hanford and Savannah River.

(4) Stainless Steel

The material most commonly used for construction of glove boxes is stainless steel. Schonfeld, Tate and Maraman report the use of 12-14 gauge 316-ELC, 321 and 347 types at Los Alamos, while Kelman, et al., mention the use of 14 gauge type 304 in an installation at the Argonne National Laboratory.

Widespread use of stainless steel for this purpose is due to ease of fabrication, ease of cleaning and decontamination and resistance to most corrosive atmospheric contaminants, chlorides being the principal exception.

(5) Mild Steel

Although not nearly so popular for glove box construction as stainless steel, some use has been made of mild steel. Schonfeld, Tate and Maraman indicate that coated mild steel is considered an acceptable material of construction at Los Alamos when atmospheres corrosive to stainless steel are present or for vacuum box construction where strength and economy must be considered. Lacey describes vacuum glove boxes built of mild steel but states that later experience has shown the use of stainless steel to be worth while. Ashburn, Elson and Welsher report that the AERE standard glove box Mark 1 is built of 1/8 inch thick mild steel.

(6) Aluminum

Aluminum glove boxes of a modular design employed in a large plutonium installation at Argonne National Laboratory are described by Shuck and Mayfield. Duraluminum has been used to some extent in France according to Grison and Pascard; Schonfeld, Tate and Maraman mention the use of this material at Los Alamos.

(7) Fiberglass reinforced plastic

A newer type of construction material is being tested by Hughes at Argonne National Laboratory where woven-glass reinforced plastic glove boxes are being developed because of a severe corrosion problem encountered with metal boxes. Hughes states that this material is similar in cost to stainless steel when fabricated and it seems to be attractive at present only where HCl or other reagents which attack stainless steel are used in glove box work.

(8) Summary

There is no single wall material that meets all requirements and the choice will depend to a large extent upon the application. Stainless steel is a good choice for most situations but when corrosive atmospheres are encountered coated mild steel is just as good and woven-glass reinforced plastic may be better.

B. Protective Coatings

Paints suitable for use in glove boxes and other radioactive contaminated areas are discussed by Burns, Clarke and Wells. They recommend a four-coat system of titanium-pigmented, chlorinated-rubber-based paint as a non-removable covering for wood or metal surfaces and state that this gives protection from attack by corrosive media or fumes and can be easily decontaminated from medium amounts of activity. For strippable systems, they recommend the application of two coats of strip lacquer over two coats of shellac knotting and use of two coats of titanium-pigmented chlorinated-rubber-based paint to cover the strip lacquer. They also suggest the use of protective base coats such as one coat of rubber-base primer and one coat of chlorinated-rubber-base paint underneath the strippable coating as added protection in case of mechanical failure or against possible contamination of the wood or metal surface during stripping. They report the use of strippable systems based on vinyl co-polymer resins and state that reasonable film thicknesses of such coatings should be employed, especially with α-active materials. Cold-catalyzed epoxide resin-based paints are said to be resistant to solvents, shock, heat to 150°C, alkalies, non-oxidizing acids, and to give an adherent, hard, non-absorbent surface coating. They also state the belief that when chlorides are employed in

the glove box it is better to use mild steel covered with a suitable paint covering rather than stainless steel.

Kaulitz and Roake report that Amercoat 1574 is used to provide a chemically resistant, non-absorbent surface on their plywood glove boxes and that Shell 4A varnish provides a corrosion resistant coating for black iron parts exposed to the glove box atmosphere.

C. Window Materials

(1) Lucite and Plexiglas

The use of Lucite, a polymerized acrylic plastic, and similar plastic or window materials, were mentioned in Section A(2) above. Kelman, et al., state that the advantages of Lucite include sufficient flexibility to adjust to slightly curved seating surfaces; resistance to slight impact; and ease of machining. It has been used in preference to glass in some glove boxes in which HF is employed. Its disadvantages are said to be lack of resistance to scratching and attack by organic materials, including oil; tendency to flow when clamped; permeability to helium, hydrogen, and moisture; and it ruptures comparatively easily on heavy impact and explosions. None of these disadvantages appears to be serious judging from extensive operating experience but its lack of heat resistance is causing this material to lose favor for use in glove boxes containing significant amounts of α-activity.

(2) CR-39

The alkyl diglycol carbonate polymer designated CR-39 is reported by Kelman, et al., to be the window material used in the Fuel Fabrication Facility at ANL. Its advantages are said to be a high degree of resistance to scratching, impact, stress crazing, and chemical attack. It is harder to machine than Lucite.

(3) Homalite

The polymerized polyester resin known as Homalite is reported by Schonfeld, Tate and Maraman to offer higher scratch resistance than Lucite. Kaulitz and Roake describe the large scale use of this material for windows in plywood glove boxes at Hanford and Savannah River. They state that it possesses surfaces comparable to polished plate glass in smoothness, luster, and chemical resistance. It is also more difficult to machine than Lucite and it tends to crack when it is seated on slightly curved surfaces.

(4) Cobex

The rigid vinyl co-polymer plastic of British manufacture known as Cobex is used in some British glove boxes when greater fire resistance than that afforded by Lucite is desired, according to Ashburn, Elson, and Welsher.

(5) Safety Glass

Safety glass has been used rather extensively in glove boxes because it is more fire-resistant than existing plastic materials. Its principal disadvantages are its lack of flexibility and impact resistance. More care is required in attaching glass panels to glove boxes in order to avoid cracking. Other advantages quoted by Kelman, et al., for safety glass are that it remains clear and smooth, it is easier to clean and purge than plastic windows, it is impermeable to gases, and cracks do not usually extend through the flexible "sandwich" material.

(6) Summary

There is no glove box window material that meets all requirements, as Schonfeld, Tate and Maraman have pointed out. Several workers in this field have expressed a desire for vigorous research and development efforts to

produce improved window materials. Despite its drawbacks, safety glass is the presently preferred window material in the U.S. for applications having any possible fire hazard in handling significant quantities of highly active α-emitters.

D. Doors and Locks

Doors are used in glove boxes to provide access to locks, interconnecting chambers or directly to an adjoining glove box. The principal types are: hinged, sliding and clamp-on. The degree of tightness required of a door depends on the area to which the door opens. Obviously, a door which opens to expose a contaminated lock to the laboratory must provide a more positive seal than one which separates two contaminated glove boxes. It has been found to be rather difficult to design a door which will give a tight seal with a single latch and two or more latches or one latch with supplementary clamps are sometimes provided where a tight seal is required. Kelman, et al., describe a rectangular door made of dished heavy sheet metal with stiffening ribs. It is hung on floating hinges and has a quick acting sliding cross bar with central loading for sealing against a restrained neoprene rectangular section gasket. Doors between boxes, vertically operated by compressed air, are described by Metz and this same design was adopted for use in an installation at Argonne National Laboratory described by Shuck and Mayfield. This ingenious type of door closure is undoubtedly more expensive than some of the simpler types but it may be worth considering where space and time saving are sufficiently important. It is provided in some commercial glove boxes (Blickman). Discussion of safety aspects of use of air locks is found in Section IV-2-B(1).

E. Gloves, Glove ports, and Glove port Closures

(1) Permeation of gases through glove materials

The problem of glove box atmosphere contamination from oxygen and moisture diffusing through glove walls has been recognized by a number of

investigators but there have been only a few attempts to provide quantitative data on diffusion rates. Rowan compares the relative rates of diffusion of water through several glove materials at two different humidities and at two temperatures, and he reports that butyl rubber is the least permeable of the materials tested. Davis, Ayer, and Mayfield provide data comparing the water permeability of two types of neoprene rubber and two types of butyl rubber and confirm the superiority of the latter. A more thorough study of the permeability of rubber materials to gases is reported by Van Amerongen who measured the permeability and diffusivity of 9 kinds of rubber with H_2, O_2, N_2, CO_2, CH_4 and He at five temperatures ranging from 17 to 50°C. He concludes that the activation energy of diffusion increases approximately in proportion to the size of the gas molecules.

(2) Glove materials and design

Although butyl rubber is clearly superior to other glove materials with regard to permeability, manufacturing difficulties mentioned by Davis, Ayer, and Mayfield have apparently limited availability of gloves made of this material. Natural rubber has been used to some extent where maximum sensitivity was required but short glove life under many glove box conditions makes such gloves unreliable. The most widely used glove material appears to be neoprene.

Browning, Adams and Hemphill report discovery of the presence of sulfur in their glove box atmosphere which was introduced by the gloves employed in their inert atmosphere enclosure when the box was evacuated. They state that it is necessary to use sulfur-free gloves under these circumstances in order to avoid the possibility of contaminating sulfur-sensitive materials.

Davis, Ayer, and Mayfield discuss design considerations that led to the adoption of two standard glove designs, one for an 8-inch glove port and one for

a 5-inch port, for use at the Argonne National Laboratory. The preferred glove material is said to be milled neoprene, the recommended thickness for general purpose gloves is 0.030 inches and the standard length is 30 inches for the 8-inch cuff size and 27 inches for the smaller diameter glove. At the University of Rochester, the need of glove box gloves permitting greater sensitivity than the aforementioned general purpose gloves was met by the development of thin (0.008 inch) gloves made from a specially compounded low-porosity neoprene material. Wilson reports that these gloves, which have a "neutral" thumb in order to fit either hand comfortably, are available in medium and large sizes, 39 to 40 inches in length and with tapered cuffs for glove ports ranging in diameter from 5 to 9 inches.

Gloves are manufactured either in one piece or in two pieces with the hands and sleeves made separately and cemented together. One piece construction may be considered preferable for handling α-active materials because of the possibility of leaks developing in welded seams.

British glove box glove experience and glove specifications are reported by Catherall. It appears that British glove box users have made more use of natural rubber gloves and correspondingly less use of neoprene gloves than have American experimenters, but neither material is considered ideal for glove box use and efforts have been made to produce improved gloves by use of various combinations of materials. These efforts apparently have met with only limited success.

Perspiration which accumulates in the gloves within a short time after beginning glove box experimentation, especially in a warm room, not only is a source of discomfort for the operator, but also, as Rowan points out, greatly increases the rate of penetration of water through the gloves. Location of glove

boxes in an air-conditioned room is considered almost essential when it is necessary to use them for more than a few minutes at a time in hot weather. The use of surgical rubber gloves on the experimenter's hands helps to alleviate the moisture-penetration problem but does nothing for the comfort of the operator. Light weight cotton gloves, changed frequently when perspiration is excessive, have been used extensively at the Oak Ridge National Laboratory. Sherfey and Herring sought to minimize the perspiration problem by flushing air through the gloves by means of a rubber tube taped to the back of the glove hand and with smaller tubes carrying the air to the tip of each finger. This technique does not appear to have received wide acceptance.

(3) Glove ports and glove port closures

The term glove port includes the circular or oval shaped holes in the glove box face and the protuberances around these holes which facilitate attachment of gloves. These protuberances may be an integral part of the glove box or attached by bolting or cementing to the glove box face. Circular glove ports vary in diameter from a minimum of 5 inches to a maximum of about 10.5 inches but the 8-inch diameter seems to be most popular in the U.S. at the present time. Oval openings 6-1/2 x 9-1/2 inches are used in some commercially available boxes (Blickman-Los Alamos type). Separate rings have been made from a number of materials but plastics and metals, both machined and cast, are commonly used. Latham and Murtagh say that many glove port designs have been tried and that the more complicated they are, the more trouble they give. They also state that the simplest and most effective design which they have tried is a double groove molded Perspex ring which is welded directly onto the Perspex (Lucite) window of the box. DuTemple, Smith and Schraidt report development of the Argonne 8-inch moulded plastic glove ring.

Glove port closures may be either of the exterior type reported by Gibb, Sherfey, Kelman, et al., and by Latham and Murtagh, or of the interior type such as that reported by Ashburn, Elson and Welsher. The latter authors state that one reason for the development of this type of port closure was to eliminate the necessity of tying gloves together to keep them out of the box while they are not in use. They also mention that these closures provide a secondary barrier to air ingress or activity escape. Further discussion of the importance of glove box closures is found in Section IV-2-E(1) in connection with glove box emergencies. Since non-flammable gloves do not exist at the present time, properly designed and used closures can materially reduce the safety hazards of glove box fires.

F. Assembly Methods

(1) Frame and panel construction

Shuck and Mayfield describe a large glove box installation in which panels are attached to metal frames. Because of the large number of glove boxes involved, it was feasible to manufacture a number of aluminum extrusions which facilitate assembly of the enclosures and permit a considerable degree of flexibility. A recent report by Malecha, et al., describes a modular glove box concept involving frames formed by welding together curved stringers, spherical corners and mullions reinforced with Unistrut. The frame is made of 1/8 inch steel sheet metal while the side and top panels are of 3/8 inch laminated safety glass attached to the box frame by means of neoprene weather strip. The floor is 1/2 inch steel plate and the end panels are made of 3/8 inch sheet steel. A perspective view of the Cenham module is shown in Fig. 2.

(a) Gaskets

The problem of obtaining leak-tight seals on glove boxes has received a great deal of attention and several ingenious gasketing and window

mounting arrangements are reported by Shuck and Mayfield and by Kelman, et al.

Neoprene is the most widely used gasket material but Grison and Pascard mention the use of pure rubber window gaskets in some French glove boxes. Restrained gaskets, i. e., gaskets set in narrow channels that restrict their spread have been reported by Kelman, et al., for both door and window seals.

(2) Shell construction

Sheet materials are formed into suitable shapes and assembled without the use of frames to make a shell structure. The large majority of glove boxes, both metal and non-metal, has been constructed in this manner. When sheet metal is used for the bottom, sides and back of the glove box, it is possible to make rounded corners which facilitate cleaning of the interior of the box. Since metal sheet joints are welded, the metal shell is essentially one piece to which the windows, glove ports, and access lock must be attached.

(3) Double-skin glove boxes

The high specific activity of Po^{210} caused British investigators to design a double-skin glove box, essentially a glove box within a glove box, for work with this material. Bagnall (1958) reports that early experience with polonium showed that escape of activity was mainly by penetration of the material through rubber gloves in use at that time and from the transfer boxes while moving materials into or out of the active area. Later experience has shown that both of these sources of activity release can be eliminated, the first by use of neoprene gloves which are more resistant to penetration of polonium than natural rubber, and the second by use of improved transfer methods discussed later. The principal disadvantages of this type of glove box would appear to be loss of sensitivity occasioned by the double glove thickness and

diminished freedom of manipulation resulting from the double wall. Bagnall(1958) indicates that the double-skin box is no longer considered essential for experimentation with polonium.

Ball describes a glove box design offering double-wall protection without the inconvenience of working with double glove thickness. An intermediate chamber is provided between the inner and outer glove boxes through which gloves attached to the outer box pass. The pressure in this intermediate chamber is maintained below that of the inner or the outer glove box by means of a fan which draws air into the intermediate chamber and exhausts it through a filter. Ball states that any activity reaching the intermediate chamber from the inner box cannot spread to the outer glove box because it is opposed by gas flow and consequently any activity is confined to the inner box or the intermediate chamber and its attached filter. This system was further developed by use of three separate sheets of rubber with horizontal slits arranged in staggered fashion so that there is no continuous slit through the screen. This arrangement permits a considerable amount of lateral motion of the gloves within the inner box and still restricts transfer of activity to such an extent that Ball feels that no special transfer boxes are necessary for moving materials from the laboratory into the intermediate chamber and thence into the inner box.

(4) Cylindrical glove boxes

One of the problems connected with glove box operation mentioned elsewhere in this review is the small working space of approximately 6 sq. ft. available to an operator through a single pair of gloves. The usual method of supplying a larger glove box working area is to build either larger boxes with a number of suitably located gloves or an interconnected series of small boxes.

Another solution to the problem is to build cylindrical boxes having a rotating floor to make different portions of the floor area accessible to a single pair of gloves and to permit a series of manipulations to be performed in a single box which would otherwise require a much larger floor area and a number of material transfers. Dolphin reports a large rotary unit for carrying out a sequence of production operations. Bagnall, et al., describe a cylindrical glove box 4-1/2 feet in diameter designed for the performance of a sequence of laboratory-type manipulations on a rotating floor which is said to make 14 sq. ft. of floor area accessible to a single pair of gloves. A double window system is used and the plane inner window carrying glove ports is held against a neoprene gasket on an extension to the wall of the box while the outer window is bolted to a wide flange welded to this window extension. In operation, the space between the windows is maintained at a slightly reduced pressure. Boxes are connected together by a 6-inch square tunnel in which an electric trolley runs to transfer materials from one box to another.

G. Commercial glove boxes

A considerable number of companies build special glove boxes according to design drawings and specifications furnished by the customer but only a relatively few companies offer standard design glove boxes for sale. (See Nucleonics, November 1960 issue for addresses of manufacturers of glove boxes and glove box equipment.) Only a few of the many glove box designs now available will be mentioned here.

S. Blickman, Inc., offers a stainless steel glove box shown in Figure 3 which has glove ports set in a safety glass front which is sloped at 15° from vertical. These units which are available in 3 or 4 foot lengths can be used either singly or as a part of a system of inter-connected boxes. This company

also manufacturers several types of vacuum boxes, one of which is shown in Figure 4 and this box is also available in 3 and 4 foot lengths. It is capable of being evacuated to a pressure of 50 microns with a mechanical vacuum pump.

The CMR double face, controlled atmosphere glove box manufactured by Kewaunee Scientific Equipment Company, shown in Figure 5, is built of stainless steel covered with a baked phenolic resin finish for additional corrosion resistance. Use of two pairs of opposing gloves makes a much larger working space available within a single enclosure. An evacuation balloon is available to help remove air from the box by use of the technique described by Sherfey.

The Berkeley type glove box offered by Scientific Services, Inc., equipped with angle front for vertical viewing, is shown in Figure 6. The basic construction material for glove boxes of this type is plywood faced on both sides with Masonite but they are also available in steel covered with vinyl paint or other finish. Thin plastic sheeting which can be removed when it becomes contaminated, may be employed to cover the interior of these boxes.

The Eringard enclosure manufactured by Dublin, Industries, Inc., a recent addition to the list of glove box manufacturers, is shown in Figure 7. This box, normally built of mild steel and covered with corrosion resistant paint both inside and out, is also available in stainless steel. The sloping safety glass windows, mounted in the box by a rubber gasket, hold 8-inch diameter fiberglass or aluminum glove rings. These boxes can be obtained equipped with a centrifuge well.

H. Glove box assemblages

Maraman discusses the Los Alamos method of building glove trains utilizing 32-inch wide, 28-inch deep and 48-inch high modules fabricated from standard front, top, bottom and end sections which are flanged and bolted

together over neoprene gaskets. The joints are further sealed with epoxy resin for tightness. Maraman states that although a glove train normally does not contain partitions between box units, one or more modules may be partitioned off to protect equipment from a corrosive atmosphere.

Kelman, et al., describe a modular design utilizing O-rings covered with a thin layer of Apiezon-N vacuum grease to obtain tight seals. They state that leak tightness should be achieved during construction and that sealing compounds or mastic tape should be employed only when a leak develops after a box becomes contaminated. Kaulitz and Roake describe methods of connecting standard 36-inch wide plywood glove box units together to form glove trains. Metz describes arrangements of glove boxes designed to facilitate analysis of α-active material. Glanville, Grant and Strachan report chemical analysis and other operations performed in a very compact suite of four inter-connected boxes.

Schonfeld, Tate and Maraman report the design of a glove box assemblage for the preparation of metallographic specimens at Los Alamos Scientific Laboratory while Cramer and Schonfeld discuss the operation of this equipment. Wick and Thomas describe the Hanford plutonium metallurgy laboratory and pilot plant. British facilities for plutonium work at the Atomic Weapons Research Establishment are discussed by Lord and Waldron, including the "Arcade" and "Island" cell arrangements for permitting maintenance work on equipment in contaminated glove boxes by men in pressurized suits. They state that although American experience indicates that it is possible to operate a plutonium laboratory without a pressurized suit area, British opinion is that some form of pressurized suit area is a valuable adjunct to the free-standing glove box system but that its size should be kept small for price reasons.

A line of glove boxes for chemical research which affords more than the usual amount of head room and also allows access from both front and rear faces

is reported by Schonfeld, Tate and Maraman. The Fuel Fabrication Facility at Argonne National Laboratory described by Shuck and Mayfield is the most extensive glove box assemblage reported to date. The Cenham module recently described by Malecha, et al., is said to permit construction of low cost assemblages. It combines features incorporated in previously developed glove boxes at the Argonne National Laboratory.

3. Filters and Scrubbers

A. Filter and scrubber construction and use

The importance of highly effective filtration methods in glove box work with plutonium and other α-emitting materials is emphasized by the previously mentioned extremely small size of particles equivalent to maximum permissible body burden values. In addition to the requirement of high filtering efficiency, glove box filters should be made of non-flammable materials. They should also have a reasonably low pressure drop and long life. A common practice is to provide a primary or roughing filter in the box exhaust line, either within the box or very near it, and a second, more efficient, filter to remove most of the remaining air activity. The roughing filter meets one of the requirements set forth by Silverman by keeping most of the active material close to its source instead of allowing it to spread through the exhaust ducts in an uncontrolled manner. This greatly reduces the hazards of removing or replacing exhaust duct lines. In addition to exhaust filters, inlet filters are provided mainly to prevent escape of activity through the inlet in case the glove box is accidently pressurized and to increase the useful life of the exhaust filters by removing dust from the inlet air.

Early types of glove box filters such as the CWS (Chemical Warfare Service) paper filters and the British resin-impregnated wool filters gave good service, in general, but lacked fire resistance. More recently, most glove box users

have demanded filters which will withstand reasonably high temperatures for use as exhaust filters in glove boxes. A filter of this type developed by A. D. Little Company is said to be suitable for use at temperatures up to 500°F or higher and is resistant to corrosive fumes. It is made up of 3-micron diameter glass fibers (80%) and asbestos fibers or very fine glass fibers. It will withstand frequent wetting and drying. A pleated glass fiber filter is described by Catlin and Allison who report that this filter type is superior to earlier filters with regard to clogging rate. The pleated filter arrangement affords a very large filtering area in a small volume so that a high degree of filtration efficiency can be obtained with a nominal pressure drop. Maraman reports an edge type filter consisting of compressed stacks of circular sheets of Dynel fibers which is said to have an adjustable pressure drop. As the pressure drop increases with use, it can be brought to its original value by decreasing the pressure applied to the filter assembly. Three sizes of Fiberglas air filters employed at the Hanford Atomic Products Operations for filtering exhaust air from individual hoods and glove boxes are described by Gifford. These filters, which were designed for disposability and low cost, do not meet present-day standards of fire resistance.

Thaxter describes a method of mounting a pleated mat of very fine(1.3 micron) glass filaments lightly bonded with synthetic resin. Since the mounting employed for this filter arrangement is wood, this would not be usable where fire hazards exist. Thaxter, Cantelow and Burk review former methods of off-gas treatment from glove boxes employed at the University of California Radiation Laboratory and report the development of a multiple purpose filter-scrubber unit used to remove acid and ammonia fumes, as well as particulate matter, from recirculating glove box air. Humidity control is said to be achieved by refrigerating the scrubber solution (1.0 M NaOH and 1.0 M KH_2PO_4 at

pH of 2.0 to 7.0). It would appear that the expense involved in such an installation, together with the need for periodically disposing of quantities of contaminated scrubbing solution, is justified only when a severe fume problem exists within the glove box.

B. Filter Efficiency

The efficiency of both wet and dry filter media in removing air-borne radioactive material from contaminated air and gas effluents is discussed by Silverman. He indicates that several methods have been employed for the determination of the efficiency of filters including the methylene blue test which provides a median particle size less than 0.5 microns, the dioctylphthalate test (DOP) which is said to give a uniform particle diameter of 0.3 microns, and counts of air-borne radioactive material of unspecified particle size. The highest efficiency shown in the table of high efficiency filters reported by Silverman is 99.997% obtained with a compressed glass fiber filter. Commercial filters having an efficiency of 99.95% by the DOP test are now available but filters having a lower efficiency are frequently employed for use as roughing filters.

C. Filter Mounting and Changing

The importance of proper mounting of filters is emphasized by Smith. He states: "All the effort to achieve perfection in a filter is lost if the unit is finally placed in a mounting that leaks, or if the filter is imperfectly sealed and allows any air to flow by it." Smith also says that bolts or clamps should be employed to depress a rubber gasket on the filter face.

Some glove box installations employ primary filters mounted outside of the glove box but an arrangement such as that reported by Kelman, et al., in which the filters are mounted within the glove box is preferred because filters

can be changed without losing the glove box negative pressure or opening the box. Since used filters must be removed from the box as contaminated waste, it is necessary to provide a removal port sufficiently large to accomodate the filters. Filter holders external to the glove box should be designed in such a manner that contaminated filters can be transferred directly into plastic bags without exposing personnel to air-borne contamination. A filter change system of this type is described by Blomgren.

4. Exhaust Systems

A. Individual Box Exhaust

Where only a few glove boxes are in use, it may be desirable to employ a separate exhaust system for each glove box. This can be either the once-through type in which the air drawn from the box is delivered to a hood exhaust system after filtration or the recirculating type described by Thaxter, Cantelow, and Burk. In the U.S., small, electrically driven fans are sometimes employed to pull air from glove boxes while most British investigators seem to prefer compressed air ejectors for maintaining a negative pressure in their enclosures. One reason expressed for their preference is the desire to avoid the maintenance problem involved in using motor-driven fans enclosed in a glove box. When large amounts of α-active materials are handled in an enclosure, there is a possibility of escape of activity through the motor spindle gland of an exhaust fan mounted outside the box. It appears that the likelihood of this eventuality is diminished by filtering the exhaust air before it reaches the exhaust fan. A separate enclosure maintained at a negative pressure may be supplied for the fan and motor.

Catlin, et al., compare the air ejector and motor-driven fan exhaust systems as to their reliability and performance and state the belief that running costs are very much less for ejectors. A non-return valve is usually provided on the suction side of the ejector to avoid the possibility of pressurizing the glove box.

They also report the determination of the ratio between vent and venturi size required to give the maximum rate of air flow with minimum applied air pressure and describe the construction of a simple glass air ejector. Reynolds and Welsher report that use of metal air ejectors constructed at low cost from standard fittings eliminates a possible health hazard from breakage of the glass ejector.

B. Fan Exhaust for Groups of Boxes

Gresham compares air ejectors with fans for providing exhaust for 50 glove boxes and states that a single fan of 200 cubic feet per minute capacity driven by a 1/4 h.p. motor is adequate for 50 boxes while 7 h.p. is required to operate 50 air ejectors. This appears to contradict the above-mentioned opinion expressed by Catlin, et al. He also states that pressurization of glove boxes has occurred through use of an ejector and that fan exhaust systems are inherently safer than air ejectors. It is certainly advisable, as Gresham makes clear, to provide sufficient exhaust capacity so that a large linear air velocity will be provided in case large openings in the glove box occurs as, for example, accidental loss of one or more gloves or rupture of a window. He recommends the use of filters capable of passing 20 to 40 cu. ft. per minute and a minimum diameter of 2 inches for the exhaust duct.

Exhaust ducts are usually made of metal, the material choice being dependent to a large extent upon whether corrosive fumes are expected to be produced in the glove boxes. Under some conditions it may be necessary to use plastic ducts and to install scrubbers to remove corrosive or potentially explosive materials from the exhaust air before it is discharged to the duct system as described by Metz, and by Thaxter, Cantelow and Burk. Roberts discusses the general problem of air supply and exhaust system in laboratories handling radioactive materials and reports details of the exhaust systems employed in the chemistry building at Argonne National Laboratory.

Flexible rubber hose connections are frequently employed to connect glove boxes to a metal exhaust system. These hose connections could burn through in case of a glove box fire, resulting in loss of glove box vacuum. Development of fire-resistant flexible connections for this purpose is very desirable.

An emergency power source such as that reported by Love, et al., is needed to keep a negative pressure in glove boxes containing high levels of α-activity when the normal power source fails. The change-over to the emergency power source should occur automatically. In the installation at the Oak Ridge National Laboratory, an exhaust fan driven by a D.C. motor drawing its power from a large bank of batteries starts automatically if the A.C. power fails. At the same time, a motor-driven generator starts charging the batteries. While tight glove boxes will minimize the liklihood of release of activity in case of loss of negative pressure, it is not considered good practice to rely on complete containment under these conditions, especially where large amounts of α-active materials are present in the boxes.

C. Pressure Measurement and Control in Sub-atmospheric Pressure Glove Boxes

The most commonly used operating pressure range for glove boxes is 0.5 to 1.0 inch of water below that of the room and manual adjustment of exhaust valves usually provides adequate pressure control. While manometers have been used to indicate the internal pressure of glove boxes employed for handling non-toxic materials, pressure measuring devices less susceptible to breakage have been favored for use when α-active materials are present in the boxes. The Magnehelic gage, which is available in several different pressure ranges, is a simple and reliable gage which has been rather widely employed on glove boxes. Gages equipped with an adjustable set-point switch are available for use where it is considered desirable to have an audible alarm sounded if the pressure in the glove box exceeds a chosen value.

Cantelow (1959) describes a simple device designed to protect pressure measurement gages from corrosive fumes and active material in glove boxes. The isolating seal consists of a long, thin, polyethylene bag contained in a 12-inch length of Lucite tubing. The bag transmits pressure changes within the glove box to the gage but contains active material. It permits the gage to be disconnected from the system without danger of release of activity to the atmosphere.

Controlled atmosphere systems operated at sub-atmospheric pressures require an automatic pressure control method. Pascard and Fabre describe equipment employed to regulate the pressure in glove boxes filled with purified argon. A compressor and two electro-magnetic valves are actuated by the top and bottom contacts of a water manometer mounted on the box. Glove box pressure is transmitted to the manometer through 1 mm I.D. copper tubing. A reservoir acts as a volume buffer.

Kelman, et al., report that the pressure in a recirculating helium atmosphere system is controlled between -0.5 and -1.5 inch by means of a pressure sensitive switch which actuating valves which cause helium to be added to or removed from the system. Coleman, et al., describe a control system involving a differential pressure switch operating solenoid valves which control admission of helium gas to the system.

Peck describes a control system employing a flexible plastic bellows, which is an integral part of the activity enclosure, and a specially designed control valve.

North reports the development of a simple and practical control valve that gives proportional control of both inlet and outlet flows so that the further the box pressure is from its set value, the greater is the restoring force.

III. Laboratory Design

Although toxic materials are sometimes handled in glove boxes placed in laboratories designed for other purposes, it should be recognized that it is almost as important to have a properly designed glove box laboratory as it is to have properly designed glove boxes. If it is built and used properly, the laboratory can serve as a secondary line of containment when active material escapes from a glove box.

In order to serve effectively for this purpose, the laboratory must be sufficiently tight so that it can be maintained at a lower pressure than adjacent areas without an excessive air flow rate and the air must be exhausted through efficient, non-flammable, filters. In addition, the walls and floor should be finished in a manner that will facilitate decontamination. Terrill discusses floor coverings and wall finishes suitable for a radiochemical laboratory while Mackintosh discusses the layout of laboratories of this type.

There are differences of opinion on the question whether glove box laboratories should be kept small to limit the spread of contamination or large to facilitate the furnishing of an air exhaust system and other services to a number of glove boxes. Obviously, neither arrangement will meet all possible needs. One suggestion is to limit the glove boxes in a single laboratory to the number required to complete the necessary manipulations on material without the necessity of removing the material from the glove train.

IV. Experimentation with Toxic Materials

1. Introductory Comments

Examination of the literature indicates that there are few chemical or metallurgical operations which have not been performed in glove boxes with α-active materials, and it is obviously impossible to deal adequately with all

of the published information in this field in a review of this type. In addition to the extensive literature on operations performed in glove boxes, a great deal of attention has been devoted to the technique of working with glove boxes containing these highly-toxic materials because of the extreme care needed to avoid release of activity. Some general rules for experimenting with plutonium and other α-active materials of comparable toxicity are listed below, which are based in part on a list of rules suggested by Kelman, et al., for safe handling of metallic plutonium. A more detailed list is given by Jette and Coffinberry.

(1) Solid compounds and contaminated materials are never exposed to the atmosphere of the laboratory.

(2) Contaminated glove boxes are kept at a lower pressure than that of of laboratory at all times.

(3) Glove boxes are not opened to the laboratory after they have become contaminated without first being thoroughly decontaminated and monitored.

(4) Volatile solvents and other combustible materials are kept to a minimum in contaminated glove boxes. Solvents are used only in boxes constructed of fire-resistant materials and provided with fire-resistant closures for the glove ports; an automatic fire alarm or fire extinguishing system is employed and only the active material currently being processed is allowed in the box.

(5) Sharp objects capable of perforating gloves and the skin of the operator are kept to a minimum and used only with great care where their use is essential. Supplementary puncture resistant gloves, either on the hands of the operator or over the glove box gloves, are employed when it is necessary to work with such tools.

(6) Similarly, exposure of hot objects within the glove box capable of burning through gloves and the skin of the operator is avoided if possible.

(7) Eating and smoking are not allowed in the laboratories.

(8) Equipment and apparatus likely to require servicing is placed outside of glove boxes, insofar as possible, with only those parts requiring contact with active material inside the box.

2. Technique of Glove Box Operation

A. Glove change methods

(1) Single clamp

Schonfeld, Tate and Maraman report that the elliptical glove ports on some Los Alamos glove boxes make it necessary to use a glove change method requiring two operators and momentary opening of the glove box to the laboratory. They indicate that this practice is not considered desirable and that circular ports designed to facilitate change without opening the glove boxes are preferred.

(2) Beaded glove and clamp

Dunster and Bennellick describe a glove change method employed on British glove boxes having circular ports with two external grooves. An O-ring at the shoulder end of the glove fits in the groove nearest the glove box face and a clamp is employed to hold the glove in place while it is being used. When the glove is to be changed, the clamp is removed and the bead of the old glove is moved to the outer groove, the bead of the new glove is slipped over the old glove to the inner groove and the old glove is then pulled into the box and the clamp replaced.

(3) O-ring and clamp

Kelman, et al., describe a glove change method similar to that above. A three-groove port is employed with the glove bead in the inner groove, a steel clamp ring in the middle groove and a neoprene O-ring in the outer groove when the glove is in use. To change the glove, the steel clamp ring is removed, the end of the glove containing the bead is folded back over the O-ring, the new glove, turned inside-out, is placed over the old glove which is then pulled into the glove box along with the O-ring. The steel clamp ring is replaced and a new O-ring fitted in the outer groove to complete the operation.

(4) One O-ring

This method is similar to that described in (3) above but the clamp is not used. A two-groove port is employed with an O-ring in the inner groove when the glove is in use. To change a glove, the O-ring is moved to the outer groove, the shoulder end of the glove doubled back over the O-ring, the new glove slipped over the old glove and fastened in place with a new O-ring. The old glove and O-ring are then pulled into the box.

(5) Two O-rings

This method is also similar to that described in (3) above with the clamp replaced by a second O-ring.

(6) Two clamps

Schonfeld, Tate and Maraman describe the use of two clamps in changing gloves. The glove port in this case is a smooth metal ring approximately 1-inch wide which can be welded directly to the glove box when the glove port section of the box is a part of the metal shell. To change gloves, the expander clamp on the inside of the glove port is first removed and placed in the shoulder of the new glove which is then pulled through the clamp, turning it to the position it occupied when not in use outside of the box. The expander clamp and new glove are next placed in position with about

4 inches of the new glove extending out from the clamp and the compression clamp is removed from the outside of the glove port ring. The end of the old glove is removed and the new glove pulled around it to the proper position on the port ring and the compression clamp is returned to its place around the end of the new glove. The expander clamp is loosened to permit the old glove to be drawn into the glove box and then re-tightened to complete the operation. It will be noted that one clamp remains in place at all times when this method is employed. It appears, therefore, that this method offers a greater degree of security than methods (2), (3), (4), and (5), where some care must presumably be employed to avoid pulling the glove loose while it is retained only by the glove bead or neoprene O-ring. Bennellick states that bad practice includes relying on an O-ring alone to keep gloves and transfer pouches secured to their ports and reports an incident in which a glove secured only by an O-ring was pulled off its port when the operator thrust his arm into the glove. In addition to its use at Los Alamos Scientific Laboratory, the two-clamp method has been successfully employed in glove boxes at the Oak Ridge National Laboratory, described by Love, et al. The low cost of the simple glove port ring required for this method of glove retention is offset to some extent by the added cost of providing two clamps. Another disadvantage is that it is more difficult to use a glove port closure plug because of the expander clamp.

B. Transfer Techniques

(1) Air lock

It is much easier to transfer materials into a glove box than to remove them because objects entering the box are generally clean while those coming out must be considered to be contaminated. Schonfeld, Tate and Maraman state that air locks and sphincter valves are ordinarily employed for this purpose at Los Alamos Scientific Laboratory. They say that on their small

glove boxes the air lock usually consists of a stainless steel box 16 x 12 x 14-1/2" equipped with two doors, one of which is always closed when the lock is used to prevent the escape of large amounts of radioactive material from the glove box. The safety of this method of introducing objects into a glove box is increased by use of an inlet air filter in one wall of the air lock so that an air flow away from the lock is effected when the door into the contaminated area is opened. Provision of a "buffer zone" between the air lock and the high level contamination area, consisting of a low contamination box area, is also helpful in preventing spread of activity. In general, use of air locks for material transfers is not considered to be a safe operation when there is very much active material involved.

(2) Sphincter valve

The same authors describe a sphincter valve for introducing cylindrical objects into contaminated glove boxes. This consists of six flat neoprene washer-shaped gaskets separated by spacers, having an inside diameter slightly smaller than the diameter of the cylindrical objects to be pushed through the valve, thus effecting a tight seal around the entering cylinder. In the version employed at Argonne National Laboratory, the cylindrical object consists of an aluminum can approximately 4 inches in diameter in which small objects can be placed for transfer into the glove boxes. One can is always left in the valve to seal it.

(3) Ice-cream carton

The ice-cream carton technique reported by Metz is useful both for introducing and removing small objects which will fit in a pint ice cream carton which serves as an inexpensive container. A specially designed metal can equipped with a bayonet-catch lid, with its gasketed lid removed and with the object to be transferred into the box contained in a carton, is attached to

the underneath side of the glove box with the bayonet catch. A 4-inch diameter gasketed plate set flush with the glove box floor is then removed and the contents of the metal can transferred into the glove box. The metal transfer can remains in place until it is necessary to remove something from the box. Metz states that this transfer method solves the problem of transfers in and out of glove boxes which are part of an assemblage. He also describes a modification of this technique in which larger objects are transferred through a 12-inch hole in the bottom of the glove box to or from a portable glove box mounted on a cart. A jack is used to raise the box into position to seal against the bottom of a cylinder extending down from the bottom of the glove box.

(4) Plastic bag

A number of investigators report use of plastic bags for transferring materials both in and out of contaminated enclosures and this appears to be the best method devised to date for removing materials from such enclosures. However, thin plastic enclosures are quite susceptible to rupture and care must be exerted to avoid accidental opening of contaminated bags.

Maraman describes the twist-sealing technique employed at Los Alamos Scientific Laboratory and this method is also used in the installation at Oak Ridge National Laboratory, described by Love, et al. Material to be removed from an enclosure is placed in a thin plastic bag which is twisted. Several inches of the twisted area are wrapped with masking tape and then a cut is made through the middle of the taped region. Both ends of the cut are immediately covered with additional masking tape. By use of a long sleeve pushed up on a metal tube extending down from the bottom of the glove box, several removals can be effected before it becomes necessary to put on a new sleeve. Use of two clamps on the metal tube permits the end of the old sleeve to be enclosed in a new sleeve without opening the glove box to the laboratory.

The use of dielectric heating for sealing plastic bags used for transferring materials in and out of glove boxes is discussed by Ashburn, Elson, and Welsher and by Kelman, et al. A simple R. F. sealing device is reported by Maton. The British workers apparently make a single seal and cut through the middle of it while those at Argonne National Laboratory prefer to make three parallel seals and cut through the center seal, which appears to be a safer procedures. Kelman, et al., state that they have used 12 and 20-mil thick vinyl plastic made into pouches with an O-ring sealed into the open end and that a 2-kw dielectric sealing power unit is adequate to seal pouches up to 15 inches in diameter. They also discuss methods employed to avoid transferring air and moisture into inert atmosphere enclosures along with other materials. One method is to transfer the materials first into an air box and then into a vacuum lock separating the inert atmosphere boxes from the air box. A gas-tight door is used to cover the pouch which is a 3-groove port like the Argonne National Laboratory glove port mentioned above (See Section II-2-E(3).)

Boyle discusses precautions to be observed in preparing welded pouches from polyvinyl chloride sheet. He states that an imperfect seal results if the bag is not kept free from wrinkles while the welding operation is performed. Leuze reports that it is important that no external stress be applied to the bag while it is being sealed.

Moulthrop summarizes developments made at Hanford Works in the application of 12-mil vinylite bags and sheeting for operation and maintenance across a contamination barrier. Dielectric heating is employed to effect a seal in 10 seconds and a coaxial cable 10 feet long is said to improve portability of the sealing unit.

Resistance heating devices for effecting plastic bag seals are reported by Dean and Ritchie, Susskind, and by Cantelow, Miles and Abram. That described

by the latter authors appears to be very easy to operate and inexpensive. Although the jaws are only 5 inches long, bags 12 inches wide or larger can be sealed by folding the plastic sheet to a size accomodated by the sealer. It is said to be easily modified for remote operations.

Commercial heat sealing apparatus, both resistance and dielectric types, is available.

C. Housekeeping and Waste Disposal

Some housekeeping rules are included in Section IV-1. Miles discusses the subject of housekeeping and decontamination in handling radioactive materials. Some suggestions which he offers include: (1) maintain a high standard of cleanliness and tidiness; (2) cover the floor of the glove box with thin plastic sheeting and, for some operations, cover this with a layer of blotting paper which can be discarded if active material is spilled on it; (3) store active material in double containers; (4) heat flasks and beakers in water or oil baths rather than directly on hot plates; (5) use small equipment where possible, which can be discarded when it becomes contaminated; and (6) use robust apparatus which will not be easily broken to spill active material. Employment of oil baths in glove boxes presents a fire hazard. A recent USAEC (1960) report indicates that a glove box fire resulted from an overheated oil bath. Use of blotting paper in glove boxes also violates rule (4) of Section IV-1.

The importance of item (1) above is emphasized by Wick and Thomas who report that contaminated glove boxes have been found to present a surface dose rate over their window area of 6-8 mr per hour due to the distribution of plutonium-containing dust over the internal surfaces of the box. Leuze states that it is difficult to prevent escape of some active material from the glove and bag portsof highly contaminated glove boxes.

Kelman, et al., say that it is important to keep the amounts of plutonium metal waste in any one place to a minimum and that small chips, powder and saw files must be brushed up and put into gas-tight containers as soon as possible after they are produced. However, Cramer and Schonfeld report that pyrophoric products sometimes form when plutonium is stored in sealed containers for long periods so that it is advisable to dispose of such wastes promptly. Cramer and Schonfeld did not offer an explanation for this phenomenon but it may be due to a cyclic series of reactions involving the formation and decomposition of plutonium hydride.

Schonfeld, Tate and Maraman say that their experience has proved that time spent daily in routine clean-up and waste removal is amply repaid in many ways. They feel that the safety and convenience of operation are increased and that better data can be obtained by application of clean-up procedures. They recommend use of a tool board to keep tools off the floor of the glove box as a safety measure and as a convenience.

Almost all workers remove solid waste material and contaminated equipment from glove boxes by the plastic bag technique discussed in Section IV-2-b(4). A few precautions to be observed may be noted here. Solid active compounds or metals should be placed in double containers before putting them in the removal bag to minimize the chance of the compound being spread around in the bag by breakage of the container or accidental removal of the lid. Broken glass, sharp pointed tools and other objects which can perforate the thin plastic bags are placed in suitable containers, or wrapped with an adhesive tape before removal. Solids wetted with liquids which may attack the plastic bag material should be placed in a container. Liquids containing active material can be handled in several ways: they can be evaporated to dryness; the active

material can be separated by precipitation; they can be evaporated to a volume that can be conveniently handled and transferred to a bottle before placing in the disposal bag; or they can be drained from the box into a plastic bag-enclosed bottle for recovery operations or disposal. Final disposal of contaminated equipment and other active wastes is generally by burial in an approved, controlled area. McNeese and Maraman describe an incinerator for radioactive residues which permits safe drying and burning of contaminated wet rags or other organic material.

D. Decontamination

Burns and Wells summarize Harwell experience and research on decontaminating glove boxes and other equipment. Wells, Aitken and Wallis report some of the experimental studies of the decontamination of stainless and mild steel surfaces included in the previously mentioned summary. They state that most strongly acidic reagents like nitric and hydrochloric acids increase the surface area of ferrous surfaces, although they are very effective in removing contamination. They report that a mixture of Sequestrol "M" and citric acid at pH 4.0 is more effective than either reagent alone and they recommend use of such a mixture plus a surface active agent when strong acids cannot be utilized. They recommend initial treatment of ferrous surfaces with a 10% solution of a surface active agent in water, preferably warm, followed by application of inhibited phosphoric acid, either as a solution or mixed with an adsorbent earth such as Kieselguhr. Burns and Wells report that ethylene diamine tetracetic acid (EDTA) is the most efficient complexing agent tested at Harwell but that for certain applications the cheaper polyphosphates incorporated in proprietary built detergents may serve effectively for removing lightly held contamination. Dilute solutions of sulfuric acid containing a wetting agent are also reported to be effective in decontaminating stainless steel, presumably by removal of the surface oxide coating.

Cox and Barker discuss procedures and formulas employed for removal of plutonium contamination from various types of surfaces. R. L. Curtis reports a literature survey on decontamination.

E. Dealing with Glove Box Emergencies

Various recommendations for avoiding emergencies in glove box work are included in Section IV-1 and elsewhere in the previous discussion but experience has shown that emergencies do occur in this type of work as well as in other types of laboratory investigation. It is advisable, therefore, to carefully consider various types of emergencies which may occur in each experiment and the measures to be used in dealing with such occurrences. Such consideration frequently leads to suggestion of methods of minimizing the expected hazards of the consequences of accidental release of activity, but occasionally it becomes necessary to perform some operations in glove boxes which are inherently less safe than others. Several types of emergencies are considered below.

(1) Fire and explosions

Apart from the possibility of direct injury to operating personnel resulting from a fire and/or explosion in an enclosure containing significant quantities of α-active material, the principal cause of concern is the possibility that the material may be distributed to the environment in such a manner that the safety of a number of people will be endangered and a large decontamination problem will result. Shuck discusses methods employed for safe handling of plutonium metal which presents a special hazard because it is pyrophoric in certain forms. He states that while fairly large pieces of unalloyed plutonium may be handled with reasonable safety, fire hazards arise from finely divided turnings and powders, plutonium hydride formed by exposure

of metal to atmospheric moisture, pyrophoric alloys and intermetallic compounds, and impure metallic residues. Commonly used fire extinguishers such as water and carbon dioxide are not effective for dealing with plutonium metal fires and may introduce additional hazards such as the possibility of a hydrogen explosion in the case of water and pressurization of the glove box when CO_2 is used. Marchbanks describes a method employed at a British installation in which the rate of gas removal is automatically increased to maintain a constant pressure differential when CO_2 is discharged into a glove box to combat a fire. Data on reaction rates of plutonium and CO_2 at different temperatures apparently are not available at present but studies of the reaction of uranium and CO_2 reported by Parker, et al., suggest that plutonium may react rather vigorously with CO_2 at elevated temperatures, supporting the previously expressed belief that CO_2 is not acceptable for combating metallic plutonium fires. A program designed to provide a better understanding of factors affecting the burning of plutonium and plutonium alloys is underway at Argonne National Laboratory and some preliminary results of the investigation are reported by Schnizlein and Fischer. Oxidation rate studies for plutonium in air are reported by Dempsey and Kay.

Experience gained from a small plutonium fire (USAEC-1955) and a later, much larger, plutonium fire (USAEC-November, 1957) in USAEC installations emphasizes some of the problems encountered in such occurrences. In the smaller fire, an attempt was made to extinguish the fire by means of carbon tetrachloride which resulted in pressurization of the enclosure from evaporation of the volatile reagent and a violent reaction. In the second incident, a large amount of CO_2 was applied to the fire without observable effect and it was eventually extinguished by means of a water spray, an experience reminiscent of the Windscale incident discussed by Dunster, Howells, and Templeton. These incidents point to a need to carefully consider fire extinguishing materials for

plutonium fires and to educate operating personnel in the proper methods of application of such agents. The only systematic experimental investigation of glove box fires and extinguishing agents reported to date is that of Jackson, et al. Their studies enable predictions to be made of the consequences of glove box fires of varying magnitude and lead to the conclusion that dry powders are the best extinguishing agents for the fires of this type. The main drawbacks to the use of powder extinguishers are said to be the mechanics necessary for application of the powder and the mess it leaves. Dry powdered materials such as sodium chloride, graphite, sand and magnesium oxide are also suggested by the USAEC* (1955) for use as extinguishing agents with plutonium metal fires but the statement is made that they cannot be relied upon in all cases to extinguish a plutonium fire. They are said to aid in reducing dispersion of plutonium oxide and to provide thermal insulation needed to expedite handling of the burning metal. The hazards involved in handling burning plutonium metal in a glove box would seem to justify this procedure only in cases where failure to do so would result in a definite likelihood of personnel exposure. Consideration of the practice of supplying automatic fire detection and control devices is recommended by the USAEC (1955). A part of the contamination problem and radiological hazards resulting from plutonium fires is due to the fact that plutonium oxide is generally produced in a finely divided form and consequently may be widely dispersed. Another observation connected with the smaller fire mentioned above, which could have been predicted from phase diagrams of plutonium with structural materials such as iron, was that low melting eutectic alloys may form from contact of burning plutonium with steel. Consequently, a definite possibility exists that a hole may form if a large piece of burning

*Current recommendations on procedures for dealing with glove box fires can be obtained from the Health and Safety Division, U. S. Atomic Energy Commission, Washington, D. C.

plutonium comes in contact with the thin shell of a stainless steel box and means of preventing such a direct contact should be provided.

Since oxygen is needed to support combustion of plutonium, inert atmosphere glove boxes are employed in a number of laboratories engaged in handling plutonium metal and alloys in the manner described by Shuck, Kelman, et al., Schonfeld, Tate and Maraman, and others.

Special consideration should be given to glove port closures since the loss of gloves in the event of fire is the most likely mode of exposure of glove box contents to the atmosphere. Bennellick states that glove ports should be kept closed with internal bungs except when the gloves are being used and that external bungs lined with asbestos or other fire-resistant material should be kept available in the event of a fire. However, Jackson, et al., point out that clamped-on gloves may serve to help relieve excessive positive or negative glove box pressure by expanding outside or inside of the box and they say that they consider a burst glove as preferable to a burst panel. An alternate method of pressure relief, such as that described below, should be provided in boxes equipped with glove port closures.

Obviously, explosions in glove boxes are to be avoided at all costs but in glove boxes in which even a remote possibility of such an occurrence exists, it may be advisable to provide a blow-off valve such as that described by Bagnall (1957). This consists of a thin, spring-loaded, aluminum plate mounted in a glove port on top of the box which releases the pressure in the glove box when it rises to about 1 inch water gage (w.g.) above atmospheric pressure and allows the excess air to discharge through a tube into the building exhaust system. A similar pressure relief system is reported by Bagnall, et al. A pressure release valve consists of a 7-1/2 inch diameter rubber ball which closes a port in the center of the domed top of the cylindrical glove box. When the pressure in the box exceeds 1 inch w.g., the ball rises to allow excess air in the box to discharge through a flexible plastic sleeve into the exhaust system. In addition to explosions,

pressurization of glove boxes may occur from supplying gas to a glove box from a high pressure source without providing automatic pressure control and from rapid evaporation of volatile material such as liquid nitrogen. The latter occurrence is unlikely except in boxes maintaining essentially a static atmosphere and the former set of circumstances is considered poor practice.

(2) Spills

Dunster and Bennellick list emergency measures to be observed in event of release of 10 μc of plutonium or more in the laboratory and/or occurrence of wounds from contaminated objects. These include:

(a) Clear everyone out of the laboratory.

(b) Permit re-entry only for urgent action and this only with adequate personnel protection, including breathing apparatus.

(c) Monitor affected personnel before they disperse.

(d) Wash contaminated wounds with a rapid flow of water directly into the wound. Encourage bleeding. Get medical aid immediately and preserve the object causing the wound for monitoring if possible.

(e) Set up a contamination control point at the approach to the affected area. Provide shoe-change and monitoring facilities.

(f) Start new air samples in the contaminated area.

(g) Take great care in undressing anyone who has been in the contaminated area. In serious cases, leave the breathing apparatus on until the outer clothing is removed.

(h) Control entry into the area until it has been decontaminated.

(j) Inquire into the cause of the accident. <u>It was probably avoidable</u>.

(3) Criticality

Experimentation with fissionable species, including Pu^{239}, U^{233}, and U^{235}, requires consideration of the possible hazard of an un-controlled nuclear excursion. Shuck discusses methods of dealing with this hazard in glove box work. These are, briefly, the always safe shape and always safe mass methods. The latter method, which involves keeping the amount of fissionable material in a glove box or an inter-connected series of glove boxes below the minimum value required to produce a chain reaction, regardless of its shape or environment, is recommended for glove box work. Henry reports critical and safe amounts of fissionable materials in different conditions, some of which are quoted by Shuck. Employment of the always safe shape method of avoiding criticality is needed only in production type operations and will not be considered here.

F. Monitoring for Escape of α-activity

(1) Gloves and other surfaces

Gloves which are in regular use should be monitored daily by means of a portable survey counter. This provides a sensitive test for small holes in the gloves, which should be changed if activity is found. Regular checking of gloves on the hands of the operators also helps to detect flaws in the glove box gloves. Floors, exterior surfaces of glove boxes, shelves, etc., should be checked at regular intervals by swiping with filter paper and making an α-count on the paper. The principal hazard from activity which can be removed from a surface in this manner is due to the fact that it may become air-borne. Many factors such as particle size, nature of the contaminated surface, and velocity of air movement past the surface determine the fraction of surface activity that becomes air-borne and it is not possible to predict the value of this fraction in any particular situation. Common sense dictates that such contamination should be kept at a low level. Cardwell reports that 30

disintegrations per minute per 100 sq. cm. of surface area is the level above which decontamination procedures must be applied in a facility of the Oak Ridge National Laboratory, described by Love, et al., which handles various plutonium isotopes. Some other installations are known to have adopted higher tolerance values for removable surface contamination. Foot monitoring helps to prevent spread of activity and to indicate when removable activity is present on the floor of the laboratory.

(2) Air Monitoring

Detection of air-borne α-activity is usually accomplished by pulling a measured volume of air through filter paper and counting the filter paper with a suitable α-counter. The task of detecting very low levels of air contamination is complicated by the fact that natural radioactivity present in the air in the form of radon and thoron result in the presence of radioactive daughters on the filter paper in amounts equivalent to many times that of the MPC (maximum permissible concentration) of 2×10^{-12} $\mu c/cm^3$ for Pu^{239}.

Fortunately, this naturally-occurring activity is relatively short-lived so that after about 24 or 48 hours, the activity remaining on the filter paper is mostly material having a long half-life. This obviously is not very helpful when it is necessary to know quickly whether an excessive amount of α-active material is present in the atmosphere. A number of instruments and procedures have been devised to deal with this situation. They include:

(a) Pulling a large volume of air through a filter paper in a short time and comparing the α-count obtained on counting the sample with a similar count for an equal volume of air known to contain only natural radioactivity. Since the natural activity in air varies considerably this procedure is not useful except to indicate when fairly large concentrations of α-activity are present in the laboratory.

(b) An instrument designed to continuously carry out the comparison indicated in Section (a) and to improve the accuracy of the determination by eliminating the uncertainty due to variation in natural radioactivity is described by Rainey.

(c) Sawle describes a continuous α-air monitor which operates on the principle that when air is drawn through filter paper, the radon daughters reach equilibrium after a short time and upon reaching equilibrium, 95% of the particles are 7.68 Mev. By discriminating electronically between these and the lower-energy, longer-lived activity, it is claimed that the resulting air monitor has a fast response and good sensitivity. When uranium is present, the instrument is said to give a positive indication by the time the operator has received 1/2 of the maximum permissible daily dose while with plutonium the figure is five times the M.P. daily dose.

(d) Instruments which measure continuously the total α-activity in the air will give an early indication of release of activity since changes in natural radioactivity in the air are said to be slow. The sensitivity of such devices is not known but Leuze states that it is probably adequate to provide an indication of the presence of 100 times the MPC for Pu^{239} within 10 minutes, during which time a person breathing this air would receive about 40% of the weekly MPL.

(e) Jehanno, et al., report an α-air monitor using two α-detectors to survey a continuous strip of filter paper, one while the air is being drawn through the paper at a rate of 150 liters per minute and the other 1 to 8 hours later, after partial decay of the natural radioactivity. It is said to be sufficiently sensitive to detect the MPC for plutonium but only about three hours after its appearance.

(f) Jehanno, et al., also report the development of a special plutonium detector using a method of estimating the count due to radon and

thoron activities by β-α coincidences characterizing RaC' and ThC'. With strong air contamination of 100 times maximum permissible dose of plutonium air, this instrument is said to alert personnel before they have accumulated one daily dose. With a very high level of air contamination, 10,000 times MPD, personnel are alerted before receiving 9.4 daily doses. When a low concentration of plutonium is present, ($\leq$ 1 MPD), the instrument sounds an alarm after accumulating 0.3 daily dose.

(g) Chubakov, Polikarpov, and Kuleshova report use of a two-channel alpha detector to discriminate between the natural radioactivity and air-borne α-contamination. They use a ZnS scintillation α-detector in their instrument but indicate that they were searching for detectors with higher resolution. They also mention a device designed to identify low-level α-activity by its α-emission energy.

(h) Collins reports use of a slit-type impactor to reject radon daughters by selectively depositing the heavier plutonium particles on a moving tape which carries them under a scintillation detector. He states that the instrument can detect 1 MPC of plutonium in air within 10 minutes and a burst of high activity within two minutes and that the monitor operates for a week without attention. Tait describes use of an annular impactor for discontinuous measurements of air-borne α-contamination and states that an efficiency of 90% for collection of plutonium particles and only 10% for natural activity was obtained. This method of separating different types of air activity was apparently first suggested by Wilkening.

(i) An α-monitor which employs electrical resistances to balance out the α- and β-activity of the natural air activity is described by Spaa (1958). Air is drawn through glass fiber filter tape which moves step-wise. A later publication by Spaa (1960) gives data on the performance of this

instrument which indicate that it can detect the MPC for plutonium in several hours.

(j) Perry summarizes work accomplished at Harwell toward the development of instruments for the continuous monitoring and rapid detection of air-borne particulate radioactive contamination. The most sensitive method which he describes for α-activity monitoring uses a two-channel system for comparison of the activity in the fresh air supply with that of the laboratory. An electrostatic precipitator is employed to deposit active particles on continuously moving aluminized paper foil. The minimum detection level for Pu^{239} in a 10 minute sampling period is stated to be 4.5 times the MPL for this α-emitter.

(k) Development of a continuous α-air monitor which operates on the same principle as that described in section (f) is reported by Gupton and Youngblood. In this instrument, equalization of the counting rates from α- and β, γ-detectors mounted above and below a continuously moving paper tape is accomplished by mechanically adjusting the sample area scanned by the two detectors. In addition to these two detectors, a second β-γ detector is employed to provide compensation for background activity of the type not due to natural radon and thoron. A second α-detector is also employed which counts the activity remaining on the tape after a four-hour decay period. This allows most of the radon daughter activity to decay and increases the sensitivity of detection of long-lived emitters. This instrument is said to be capable to detecting five times the MPC for Pu^{239} in one hour. At this concentration, a person could breath the contaminated air for 8 hours before exceeding one week's MPL of exposure.

(l) A commercially-built continuous air monitor is offered by Nuclear Measurements Corporation which records the α- and β-γ activity and the ratio of the β-γ to α-activity. An alarm system is also provided with this

instrument. In addition to the measurement of the α-activity in the laboratory air by one of the above-mentioned methods, determinations of the α-activity in the filtered exhaust air should be made at regular but less frequent intervals as a check on the effectiveness of the filter medium. Discontinuous sampling methods, with sufficient time allowed for decay of the natural air activity, are adequate for this type of air monitoring.

(3) Personnel

Since the reason for all of the previously discussed precautions is the need to keep plutonium or other α-active material out of people, the final test of the effectiveness of the precautions is the amount of toxic material in the exposed personnel; it is not possible to monitor personnel directly for α-activity because of the low penetration of tissues by α-rays but indirect methods based on experimentally determined rates of elimination are available. Routine analyses of 24-hour urine samples should be performed on people working with α-active materials once a month or quarterly and as soon as possible after air monitors or other means of detection indicate over-tolerance amounts of α-activity released to the laboratory. In cases where ingestion or inhalation of significant amounts of α-active material is known or strongly suspected, analyses of feces should also be performed. A number of cases have been reported of people who received more than the present maximum permissible body burden of plutonium, but it is somewhat heartening to note that no fatality directly attributable to an over-exposure to α-active material has been reported to date. Roesch and Baum report the development of a very sensitive detector for plutonium in wounds. Schwendiman and Healy discuss a sensitive analytical method for the determination of plutonium in human beings.

G. Monitoring for External Radiation

Schulte and Meyer report that the X-rays from plutonium, of which

that at 17 Kev is most abundant, are not a problem for ordinary laboratory-scale work but that when kilogram quantities are being handled, monitoring must be performed by means of film badges or dosimeters specially calibrated for radiation of this energy range. Leuze states that similar monitoring methods are required for work with Am^{241}. Schulte and Meyer also point out that fast neutrons are released by the α-n reaction when plutonium or other α-emitters are intimately associated with light elements. A portable survey instrument for detecting fast neutrons is described by Hurst, Ritchie, and Wilson.

H. Laboratory Clothing

It is customary to provide company issue clothing for employees working with α-active materials. This is frequently referred to as protective clothing but, as Schulte and Meyer point out, this is a misnomer. It is protective in a very limited sense in that it keeps α-activity from contaminating the employee's street clothes and helps to keep it from contact with his skin. The minimum issue is a laboratory coat and gloves for the employee's hands. Some installations also require shoe covers which are put over the shoes on entering the laboratory and discarded on leaving. The purpose of the shoe covers is to avoid accidentally spreading activity from the laboratory to other areas. It appears that placing reliable and convenient foot monitors at the entrance, as presently practiced in some plutonium laboratories at Argonne National Laboratory, will serve the same purpose and in addition will give an earlier indication of α-activity on the floor of the laboratory.

Some installations require a complete change of clothing for employees working with plutonium and also require a shower before donning street clothing. Contaminated clothing cannot be sent to commercial laundries.

3. Experimentation in Glove Boxes

A. Weighing

Problems encountered in weighing in a dry atmosphere are discussed

in Section V-4-E. The more general problem of operating a balance enclosed in a glove box will be briefly considered here. It is stated in Section IV-1 that apparatus designed or chosen for use in glove boxes should take into consideration the limitations of glove box use and this is certainly true of balances. Those types which employ push buttons, knobs or similar means of applying weights built into the balance are preferred to those requiring use of tweezers to change weights. It should also be kept in mind that in boxes not equipped with full-length front windows it may be more difficult to observe the position of the pointer or vernier than it is outside the glove box. It is inherently more difficult to provide a vibrationless balance support in a glove box than in the open laboratory and careful design of the box, its support, and connection to adjoining glove boxes may be necessary to provide the stability required for accurate weighing in some locations. For research with highly active α-emitters like Po^{210} it is sometimes necessary to weigh microgram quantities of materials accurately. Goode describes the Mound Laboratory quartz-fiber balance which is a modification of that reported by Kirk, et al (1947). This balance is said to permit 12 weight determinations per hour, and an accuracy of 0.1 μg of polonium. Williamson, Poole and Marples mention use of a balance which applies weights less than 1 g. by means of a chain with an accuracy of 5 mg.

Glanville, Grant and Strachan describe modifications made on a Stanton semi-microbalance to make it more suitable for glove box use. They state that, since the normal tubular glove box support is not sufficiently rigid for accurate weighing, the glove box is bolted to a solid concrete plinth and the balance is also mounted on an anti-vibration table.

A continuous reading balance reported by Dempsey is an improved version of a balance described earlier by Dempsey and Kay. This balance employs a

crossed beryllium-copper alloy spring suspension and is said to be sensitive to mass changes of the order of 50 to 100 μg. It is also said to be quite robust and otherwise quite suitable for glove box work for which it was designed.

B. Heating

The problem of heating materials in glove boxes is complicated by the previously mentioned need to avoid possible contact of gloves and the operator's hands with hot objects. Heating of the glove box atmosphere and walls is another problem that needs to be considered. The rate of air removal which is often as low as 5 cfm needs to be increased to several times this value when heating devices are employed in the box. When conventional furnaces are used, they should either be of a type which is so well insulated that the outer jacket is cool enough to avoid damage to gloves when the furnace is at operating temperature or a cooling coil may be employed around the outer jacket to keep it cool. Muffle furnaces fitted with suitable corrosion resistant liners and placed in compartments attached to the bottom or back of stainless steel glove boxes are employed in an Oak Ridge National Laboratory installation described by Love, et al. Cooling is provided by copper coils soldered to the exterior wall of the glove box extensions. Replacement of heating elements in this type of furnace is a very troublesome and time-consuming operation. One method of avoiding this difficulty is to keep the furnace outside the glove box by use of a design such as that reported by Barton. A diagram of this arrangement is shown in Figure 8 . In addition to avoiding the furnace maintenance problem, this scheme also conserves valuable floor space in the glove box and minimizes heating of the glove box atmosphere even when the furnace contents are heated to a temperature of 1000°C with the help of an auxiliary heater described by Barton and Strehlow. The exterior furnace alone is capable of heating materials in the

inside container to 800°C. The disadvantages of this method of heating are the undesirably high exterior wall temperatures required to heat samples to 1000°C or higher temperatures and the large temperature gradients that exist in the heated region. The latter effect can be minimized by increasing the length of the tubular glove box extension.

Commercial hot plates are frequently employed in glove boxes but some means of preventing possible contact of gloves with the heating surface should be provided. A simple, home-made hot plate provided with a replaceable aluminum cover is described by Bagnall and Spragg.

Moore, Wright and Martin describe a small tantalum resistance furnace for heating and quenching small metal samples in vacuum at temperatures up to 1200°C. The crucible can be raised from room temperature to 1000°C in 3 minutes. Radiation shields eliminate the need of insulating material so that there is no outgassing problem.

Williamson, Poole and Marples report the design of a nichrome resistance furnace for heating alloys in a vacuum or inert atmosphere to a maximum temperature of 1000°C. They also describe a water-cooled arc furnace for temperatures in the 1000-2000°C range. The temperature of specimens contained in a tantalum boat is measured by means of an optical pyrometer to $\pm$ 50°C through a large silica window provided in one side of the furnace wall.

Maraman mentions use of induction heating in the melting and casting of metallic plutonium in a glove box. Lee, at al., describe apparatus in which the melting and casting of plutonium is performed in a single steel vacuum enclosure. The furnace contains an internally-wound spiral heating element and molybdenum radiation shields keep power requirements down to 1 kw at 1300°C.

Engle, Endebrock and Cox indicate that induction heating was used with an experimental Pyrex polonium still but do not give details.

C. Centrifuging

For glove box work, separation of solids and liquids may be performed more rapidly and conveniently by centrifuging than by filtering. Metz reports an arrangement employed at Los Alamos in which a centrifuge is supported beneath a glove box with only the interior of the bowl exposed to contamination. This illustrates a principle mentioned in Section IV-1 since the centrifuge motor which is the part most likely to require servicing remains uncontaminated. However, the entire centrifuge can be easily removed, if necessary, without opening the glove box proper.

D. Polarography

Metz describes a method of performing polarographic determinations in a glove box. The constant temperature bath and polarographic cells are placed within the box while the polarograph is placed adjacent to the box and connected to the cells by means of extended shielded leads. The mercury reservoir is also located in the box with the levelling adjustment extended outside the box.

E. pH Measurements and Potentiometric Titrations

A slightly different arrangement is employed at Los Alamos for making pH measurements in glove boxes, according to Metz. A pH meter is supported directly underneath a plastic panel in the bottom of a glove box, near the front where it can be easily seen by the operator. Leads and controls are brought through O-ring seals in the plastic panel which protects the meter from contamination. The meter is said to be employed for potentiometric titrations but obviously can be used for pH measurements also.

F. Solvent Extraction and Ion Exchange

Both of these techniques are very important for separation and purification of actinide elements but very little has been published on

performing these operations in glove boxes. This may be due to the fact that much of the research on separation methods has been carried out at tracer level and to the fact that most researchers have apparently been more concerned with reporting results than techniques. Leuze states that glove box extensions similar to the glass enclosure described by Ketchen, et al., are employed at the Oak Ridge National Laboratory to provide additional headroom for ion exchange columns enclosed in glove boxes. Gloves are said to be useful for sealing the top ends of 6 or 8-inch diameter glass pipes. Maraman reports the use of modified Schiebel extraction columns in a three-section modular glove box train for large scale purification of plutonium. Hyde reviews separation methods for the actinide elements and Stewart discusses ion exchange separation methods and describes exchange columns suitable for separation of small quantities of materials both at room temperature and higher temperatures. The early literature in this field is reported by Seaborg, Katz and Manning and by Seaborg and Katz. Gram quantities of Np^{237} were separated by Hindman, Cohen and Sullivan using a mixer-settler arrangement for extraction-purification.

Prevot, Corpel and Regnaut describe solvent extraction and ion change processes employed in France for the purification of plutonium. Extraction of plutonium with tributyl phosphate is performed in a bank of mixer-settlers.

G. Vacuum Systems

Some of the literature on vacuum systems in glove boxes is reviewed by Steindler. Both glass and metal vacuum systems have been employed but because of the difficulties and hazards associated with glass blowing in glove boxes, glass systems have had rather limited use. Bagnall (1957) reports research carried out with polonium in glass equipment. He indicates that glass blowing is performed in a separate compartment adjacent to the double-skin

vacuum system box. Engle, Endebrock and Cox describe glass and metal containers employed at Mound Laboratory for vacuum distillation of polonium. Vacuum pumps are normally located outside of the glove boxes, sometimes within separate sealed compartments, and they are usually vented to the glove box exhaust system. Some workers, however, prefer to have their complete vacuum system located inside a glove box. Although vacuum pump oil apparently traps plutonium particles rather effectively, a filter should be provided in vacuum lines within the glove box in order to prevent contamination of exterior vacuum lines and the vacuum pump. Steindler reports that limestone traps employed to trap experimental quantities of fluorine allow the passage of only trace amounts of plutonium. Granular NaF traps employed by Barton to trap small quantities of HF probably served the same purpose, but the efficiency of their retention of plutonium particles was not determined. Barton also mentions use of a metal filter unit in the vacuum line. The welded unit provided with Swagelok fittings for easy insertion in the metal vacuum line contains a sintered nickel filter medium (0.0004 inch porosity). Apparatus employed for melting and casting metallic plutonium in a vacuum is described by Maraman and by Lee, et al. Vacuum apparatus including a glass bell-jar seating on an O-ring vacuum seal capable of providing a vacuum of 5×10^{-5} cm of mercury is described by Moore, Wright and Martin.

H. Preparation of X-ray Diffraction Samples

Examination of solid samples of highly active α-emitters is nearly always performed with small portions of the material sealed in thin-wall capillaries. Loading and sealing of the capillaries is performed either in a glove box or a well-ventillated hood but clean, sealed capillaries can be examined in ordinary X-ray diffraction equipment. Steindler gives details of a method of preparing X-ray diffraction capillaries employed at Argonne National

Laboratory. Moore, Wright and Martin describe the technique employed at the Atomic Weapons Research Establishment for sealing active metals in a silica capillary either under vacuum or in an inert atmosphere. A small platinum resistance furnace is used to melt the silica tube while it is attached to the vacuum system by means of a black wax seal to a larger piece of tubing. This decreases the hazard of the sealing operation by eliminating the need of an open flame and a transfer operation to an open-front hood. A technique similar to that described by Steindler is employed at Los Alamos Scientific Laboratory. However, there the flared end of the capillary is inserted through a hole in a rubber stopper and the stopper placed in a glass test tube to protect the outside of the capillary from contamination and breakage during the loading operation in a glove box and during transfer to an open-front hood. The stopper is carefully removed from the test tube in the hood, the capillary is grasped with a clean pair of tweezers and flame sealed, separating it from the contaminated loading end.

Williamson, Poole, and Marples describe an adaptation of the Guinier focusing camera which permits X-ray diffraction examination of α-active metal samples enclosed in an extension of a glove box. The X-ray tube, monochromater, and film holder are located outside of the glove box and thus do not become contaminated.

I. Optical Microscopy

Microscopes have been mounted in glove boxes by a number of investigators to permit examination of metallographic specimens and powdered samples of α-emitter materials. Metz shows a picture of a Bausch and Lomb polarizing microscope mounted in a rectangular glove box with the ocular lens tube protruding through the top of the box. A flexible bellows arrangement permits

vertical movement of the ocular tube while providing a tight seal to prevent escape of activity from the box.

The Los Alamos microscope arrangement requires the observer to bend over the box which can be rather tiring. A modification permitting use of a sloping front glove box is reported by Barton and is shown in Figure 9. A Zeiss polarizing microscope is supported on a transparent plastic support attached to the Lucite front panel, affording maximum visibility. A stainless steel pan covering most of the painted plywood floor of the box facilitates cleaning.

Williamson, Poole and Marples report the use of a 10-mil thick clear polyvinyl chloride bag attached to a glove box to contain metallographic samples while they are examined by means of a binocular microscope. A drop of immersion oil on the face of the specimens is said to improve optical contact between the specimen and plastic container. The authors state that modification of this arrangement would permit photomicrographs to be made.

Barton mentions use of a low-power, long-focal-length binocular microscope mounted on a small chamber attached to the front of a stainless steel glove box for observing small objects mounted underneath a window on top of the chamber.

Grison, et al., report the employment of microscopes in glove boxes in connection with the metallurgical examination of plutonium and plutonium alloys.

J. Fluorination and Hydrofluorination

Treatment of plutonium compounds with HF to produce PuF_3 or PuF_4 has long been a process of considerable importance because these compounds have been the ones most generally employed for the preparation of plutonium metal. Morgan, et al., describe apparatus employed in the Los Alamos Plutonium Metal Production Plant for the conversion of plutonium oxide to PuF_4. They use aqueous NaOH to scrub excess HF from the effluent gas stream.

The preparation of milligram quantities of PuF_3 and PuF_4 is described by Dawson, et al., who report observations of the behavior of these materials in different atmospheres over a range of temperatures. Earlier studies of the preparation and high temperature behavior of PuF_3 and PuF_4 are reported by Fried and Davidson. Barton employs ammonium bifluoride to prevent hydrolysis of PuF_3 in fluoride mixtures and it appears that the use of this reagent may provide a convenient means of converting small amounts of oxides to fluorides in glove box work without the necessity of using gaseous HF. Barton uses two traps in series containing granular NaF to remove HF from the effluent gas stream before discharging it into the glove box exhaust system. The first trap is maintained at 100°C to prevent formation of semi-solid higher NaF-HF complexes.

Studies performed at Los Alamos on the preparation, identification and vapor pressure of PuF_6 are reported by Florin, Tannenbaum and Lemons. Similar studies performed at Harwell are reported by Mandelberg, et al., who describe the preparation of PuF_6 by fluorinating PuF_3, PuF_4 and PuO_2 and studies of several variables affecting the rate of reaction. They also report determinations of vapor pressure, melting point, rate of radiation decomposition and reactions with water and sulfuric acid. Weinstock and Malm compare the properties of UF_6, NpF_6 and PuF_6 and describe methods and apparatus used in the preparation of NpF_6.

Hyde and O'Connor describe a nickel furnace tube said to be suitable for both fluorination and hydrofluorination of 1-20 gm. quantities of materials. They employ copper feed and effluent lines with AERE vacuum fittings gasketed with Teflon or Kontite. Graphite or nickel sample boats are said to be suitable for the hydrofluorination reaction but only nickel is usable in a fluorine atmosphere. To dispose of unreacted HF, they condense it in an all-polyethylene

condenser and allow it to syphon into a polyethylene bottle containing saturated KOH. Excess fluorine is burned with coal gas in a hood and the reaction product gases are absorbed in 10% NaOH solution.

Recent interest in PuF_6 has been stimulated by the hope that a method of separating plutonium and uranium by the volatility process might be found. Steunenburg and Vogel report that gaseous PuF_6 can be transferred in nickel apparatus which has previously been treated with fluorine. Steindler, Steindl and Steunenburg report details of the equipment and techniques employed in this research.

K. Chlorination

Methods and equipment employed in the preparation of plutonium chlorides and oxychlorides are discussed by Abraham, et al., who indicate that CCl_4 and $CoCl_2$ are the most efficient chlorinating agents for plutonium. Vapor phase chlorination of PuO_2 can be performed with CCl_4 and Cl_2 at 280°C in a sealed bomb.

A study of the liquid phase chlorination of various plutonium compounds with hexachloropropene (HCP) is reported by Christensen and Mullins who state that they got most complete conversion of plutonium to the chloride (98%) by heating freshly prepared plutonium oxalate, dried with alcohol, with at least ten times its weight of HCP for 18 hours with vigorous stirring at temperatures in the range 180 to 190°C. A modification of this procedure is reported by Freeman, Hill and Smith, who melt the chlorination product under an inert atmosphere and convert it into 2 g. billets to make the hygroscopic material easier to handle. Another modification of the HCP procedure is employed by Case and Barker to effect more complete conversion of plutonium to the chloride. They boil off the HCP and pass phosgene over the residue while increasing its temperature to a maximum of about 600°C.

L. Spectrophotometry

Several types of spectrophotometers lend themselves readily to glove box use by permitting the cell carrier to be mounted inside the glove box while the remainder of the instrument remains outside the box. Glanville, Grant and Strachan describe the use of a Unicam model S.P. 500 spectrophotometer in this manner for measurements at room temperature and with solutions sealed in 3-mm I.D. glass ampoules at temperatures up to 180°C. Spectrophotometric studies of solutions of plutonium and other actinide elements have been very useful because differences in the absorption spectra of the various valence states afford a very convenient method of identification of the valence of the element in solution.

M. Spectrographic Analysis

Metz reports performance of spectrographic analyses of α-active materials at Los Alamos Scientific Laboratory by means of equipment located in a glove box but does not give details of the arrangement. As was the case in spectrophotometric analysis, it is only necessary to locate that part of the apparatus which must become contaminated in the glove box. Conway and Moore describe spectrographic equipment having an arc-spark chamber mounted in a glove box for the determination of the impurities in high-level radioactive α-emitting elements. They state that the equipment can also be used in the spectrographic analysis of various other toxic materials.

N. Thermal Analysis

Westrum and Eyring describe apparatus used to determine the melting point of microgram quantities of neptunium metal. The minute globule of metal is held in the jaws of a tungsten spring so that the jaws close when the sample melts. An iron-constantan thermocouple spot-welded to the spring

near the sample measures the sample temperature. The spring is surrounded by a tantalum radiation shell and enclosed in a Pyrex glass bulb attached to a high vacuum system. A copper coil around the Pyrex bulb, connected to a 300-watt oscillator supplies the heat. The sample is observed by means of a low power binocular microscope through a polished Pyrex viewing port in the end of the Pyrex bulb.

Westrum and Wallman report the determination of the melting point of PuF_3 in a 10-mm O.D. furnace constructed by winding 0.6 mm tungsten wire around a beryllia furnace block. The sample container is a tantalum crucible having a thermocouple shield extending from the bottom to the center of the crucible. A thermal analysis experiment conducted with a 350-mg. sample of PuF_3 is described using a platinum/platinum-10% rhodium thermocouple and an optical pyrometer to measure the temperature. The furnace assembly is contained in a bulb which can be evacuated and filled with argon.

Ball and Lord describe apparatus used for early thermal analysis studies with 0.05 cm^3 plutonium samples heated by a molybdenum wire furnace. The furnace is surrounded by molybdenum heat shields and is enclosed in a bell-jar which can be evacuated. The sample is contained in a ceramic crucible having a hole drilled in the bottom which permits the thermocouple to be separated from the sample by only 3-5 mils thickness of ceramic material. A differential thermal analysis method is employed with the difference between the sample and reference thermocouple junction being amplified 100X.

Martin and Edwards report the development of thermal analysis apparatus designed for studies with beryllium and its alloys in a vacuum but this apparatus could undoubtedly be employed for work with more toxic metal. It employs a tantalum cylinder as the heating element and molybdenum radiation shields. Pearce and Mardon discuss apparatus that automatically records thermal

analysis and dilatometer data simultaneously on small metallic samples at temperatures up to 1200°C. Two identical sets of apparatus, including the vacuum system, are mounted in a single standard-size glove box. A nichrome furnace is said to be preferred for lower temperature studies while a molybdenum-wound furnace is employed at high temperature with somewhat unsatisfactory results attributed to vaporization of molybdenum oxide.

Thermal analysis studies performed at Los Alamos Scientific Laboratory with $PuCl_3$ systems are reported by Bjorklund, et al., and by Benz, Kahn and Leary. They describe apparatus employed to obtain differential thermal analysis data. Great care is necessary in handling $PuCl_3$ to avoid water absorption by this highly hygroscopic material.

Thermal analysis apparatus employed at the Oak Ridge National Laboratory to study phase relations in PuF_3 systems is described by Barton and Strehlow and by Barton, Redman and Strehlow. The heating system described in section IV-3-B was employed to provide a part of the heat needed in these studies.

Rhinehammer, Etter and Jones report a differential thermal analysis technique employed for studies of plutonium alloy system.

O. Solubility Measurements

Apparatus used for the determination of the solubility of plutonium in mercury at temperatures in the range 20-325°C is described by Bowersox and Leary. The plutonium-mercury mixture is equilibrated under a helium atmosphere for 24 hours or longer and then a sample of the liquid is filtered through a fritted glass filter. The plutonium content of the mixture is determined by analysis.

Apparatus for the determination of the solubility of plutonium trifluoride in various mixed fluoride solvents in the temperature range of 500-700°C is reported by Barton. The measurements are made by equilibrating about 6g. of

solvent mixture with an excess of PuF_3 under a helium atmosphere at the desired temperature and then forcing a portion of the liquid through a small, sintered nickel filter disc welded in the end of a length of nickel tubing. The plutonium content of the filtrate is determined by chemical analysis after cooling the apparatus to room temperature.

P. Calorimetry

Rogers discusses calorimeters developed at Mound Laboratory for the assay of α-emitting isotopes, especially those incorporated into neutron and α-sources. He states that a precision of 0.1% is attained with quantities of activity ranging from 0.1 curie to several hundred curies and that one person can assay 5 samples a day with a resistance bridge calorimeter. Construction details are reported for a differential-bridge calorimeter and the constant temperature bath in which measurements are performed. The determination of the half-life of Po^{210} by means of the resistance-bridge calorimeter is reported by Eichelberger, et al.

Q. Density and Viscosity Measurements

Freid and Davidson describe a technique employed to measure the density of a 40-μg sample of metallic neptunium. A weighed sample is placed in a capillary tube containing butyl phthalate and the displacement of the meniscus is observed. This method was employed earlier by Kirk, et al., (1943) for the determination of the density of plutonium metal and also has been used by Westrum and Eyring for the determination of the density of neptunium and americium.

Dilatomers have been employed by a number of investigators to measure the density of metallic plutonium at different temperatures. This rather unusual metal exists in six different allotropic modifications which makes the study of its density as a function of temperature quite interesting. Some of the early

measurements are discussed by Ball and Lord, and by Loeb, et al., Pearce and Mardon report an automatically recording dilatometer which undoubtedly makes such measurements less tedious than the earlier visual recording method. French apparatus employed for dilatometer studies of plutonium and plutonium alloys is described by Grison, et al.

Cramer and Schonfeld state that the density of plutonium and plutonium alloy specimens is measured by loss of weight in bromobenzene using balances mounted in glove boxes. A torsion balance is used for samples of 1 gram or less while a modified analytical balance is employed for measurements with larger samples.

Wittenburg, Ofte and Jones discuss methods for measuring the density and viscosity of liquid plutonium and plutonium alloys at temperatures up to 1000°C. They use a vacuum pycnometer technique for density determinations with tantalum pycnometers and an oscillating cup viscosimeter for viscosity measurements. Earlier determinations of the density of liquid plutonium are reported by Comstock and Gibney.

R. Metal Production

The production of plutonium metal has progressed from the microgram scale reported by Kirk, et al., to as large a scale as is consistent with nuclear safety. Morgan, et al., discuss the large scale production of Pu metal in remotely controlled equipment. Plutonium tetrafluoride is reduced by calcium with iodine added as a booster in a bomb fitted with a ceramic liner. Ball and Lord state that the first method employed by British investigators was lithium vapor reduction of PuF_3 but this soon gave way to the calcium reduction of PuF_4. They report that it is possible to follow the course of the reduction by monitoring the neutron output of the charge. This method depends on the fact that the α,n

reaction occurs only when an α-emitting element is intimately associated with a light element, in this case fluorine. After the reduction is complete and the Pu metal is separated from the slag, neutron production is very low. This points to one of the problems associated with present methods for the large scale production of metallic plutonium. It is rather difficult to provide effective shielding for the fast neutrons produced by the α,n reaction.

Production of other actinide elements such as neptunium and americium also started on the microgram scale, as reported by Fried and Davidson and by Westrum and Eyring. The methods employed are similar to those for making plutonium metal but the latter investigators used barium to reduce NpF_3 and AmF_3. The low melting point of these metals, as compared to uranium and thorium, makes it much easier to obtain the metal in a coherent button or globule.

S. Electromagnetic Separation of Isotopes

Although the size and complexity of equipment required for the electromagnetic separation of plutonium isotopes does not encourage attempts to carry out the operations involved completely in glove boxes, there is a great deal of glove box work involved in certain phases of the operation. British investigators have chosen the "frog suit" arrangement for this purpose in the "Hermes" process briefly described by Paulsen. Operators fully enclosed in rubber or plastic suits are supplied with air from outside the contaminated area in which they work. Several British writers have mentioned the difficulties connected with working in these suits, such as limited working time for operators, clumsiness and danger of exposing operators while getting out of a contaminated suit. Freeman, Hill and Smith report details of construction and operation of the 90° sector electromagnetic separator and discuss the first year's operational experience with the equipment.

Love, et al., discuss the quite different approach to this problem employed at the Oak Ridge National Laboratory, with particular regard to the safety aspects of the operations. Since the electromagnetic separation itself is performed in a vacuum-tight enclosure, there is very little hazard connected with this operation. Only about 5% of the plutonium charge material is deposited in receiver pockets from which the separated isotopes are recovered, and most of the remaining 95% of the charge is deposited on the inner surfaces of the large calutron tank. This is enclosed in a large vinyl plastic bag while it is transferred to the work area where it is washed thoroughly to recover the plutonium for recycle. The dilute wash solution is concentrated, the plutonium purified by extraction in a mixer-settler arrangement, precipitated and then converted back to the chloride in an inter-connected suite of glove boxes to complete the cycle.

T. Using Burets and Pipets

Many operations which are very simply performed in the open laboratory are much less conveniently carried out in glove boxes. Techniques for using burets and pipets in glove boxes are described by Glanville, Grant and Strachan. A modification of a commercial device called the "Propipette" is employed with pipets for measuring macro amounts of solutions (1-50 ml) while a syringe type micropipet is employed for smaller volumes. They also describe a means of supporting a buret in a glove port type opening in the top of the box. The buret passes through a rubber stopper which is supported by a clamping plate held in place by wing nuts. A plastic bag is attached to the top of the box and near the top of the buret to prevent escape of activity and to allow the buret to be raised and lowered as desired.

U. Miscellaneous Techniques

Glanville, Grant and Strachan describe a simple arrangement for

preventing escape of corrosive fumes into a glove box. An inverted glass funnel is connected to the hood exhaust through a filter. They also report apparatus permitting use of ozone in glove boxes. Glanville and Grant describe a cell for electrolytic oxidations and reductions. Cantelow reports a method of safely disconnecting "hot" hose lines from glove boxes. Leary, et al., discuss pyrometallurgical methods for removing fission products from plutonium or plutonium alloys.

V. Controlled Atmosphere Enclosures for Non-toxic Materials

1. Introductory Comments

It would appear feasible, at first glance, to discuss dry boxes and inert atmosphere boxes separately but a review of the literature revealed that many investigators found it convenient to provide a dry atmosphere within their glove boxes by use of an inert gas so that it is difficult to separate the discussion of these subjects. A variety of enclosures described in the literature are reviewed here in an effort to provide a wide choice of equipment for varied experimental needs. Some enclosures which do not employ gloves are included in the discussion without further apology because they serve the same purpose as glove boxes, permitting manipulations to be performed in a controlled atmosphere. Six statements regarding glove box work are listed below. While these statements are not to be regarded as axiomatic, they may serve as useful guides. The first three apply specifically to controlled atmosphere enclosures while the last three apply to any type of glove box experimentation.

(1) Some oxygen and moisture will diffuse through glove materials, gaskets and small leaks in the box. In order to maintain concentrations of these impurities at a low level in the box atmosphere, continuous flushing, recirculation through an efficient purification system, or another removal method is required.

(2) An entrance lock must be provided for enclosures which depend on flushing for their purification. Such a lock must be fitted for flushing by an inert gas or, preferably, for evacuation and filling with an inert gas.

(3) Commercial inert gases can be obtained which are sufficiently pure so that improvement in their purity can only be obtained by rather elaborate and sophisticated purification systems.

(4) It is less expensive, whenever it is possible to do so, to design equipment to permit the employment of commercially available glove boxes rather than to construct boxes to fit around one's apparatus.

(5) The average length of the human arm is the factor that determines the size of small boxes and the location of extra glove ports in larger boxes.

(6) Most operations are more difficult to perform in a glove box than in the open laboratory and apparatus should be designed or chosen to facilitate glove box operation.

2. Construction of Non-commercial Enclosures

A. Plastic bag enclosures

Franklin and Voltz describe the construction and use of a bag made by heat-sealing plastic storm window material. This inexpensive equipment is recommended by its developers for procedures requiring the transfer of materials under dry conditions. A dry atmosphere within the bag is obtained by passing dry nitrogen through the bag for several hours before it is used. Water adsorption by magnesium perchlorate in the bag was observed to be only 7% of that of the same material outside of the bag. The low cost of this type of enclosure may make it attractive to some experimenters who are considering only a few manipulations requiring a moderately dry atmosphere but it appears to have very limited utility.

Webb and Softky report use of two polyethylene bags, one within the other, to provide a larger and more elaborate enclosure than that described by Franklin and Voltz. Gloves are attached to the bags by aluminum rings and Scotch electrical tape. A dry atmosphere, determined to be in the range 1 to 5% R.H., is provided by evaporation of liquid nitrogen contained in a large Dewar flask. The bags are collapsed around their contents initially to remove most of the contained air and then inflated with nitrogen to a pressure slightly above that of the atmosphere and continuously flushed, allowing nitrogen to escape from the bags by bubbling through an oil bath. Visibility in this type of enclosure should be excellent if transparent plastic sheeting is used rather than opaque material requiring attachment of transparent windows.

A. Hughes uses the collapsibility of a thin polyethylene glove box to speed the attainment of an inert atmosphere needed for the sampling and analysis of alkali metals. His calculations indicate that three successive deflations and inflations with an oxygen-free gas will reduce the oxygen content of the glove box to about 10 ppm.

B. Glass enclosures

A small compact "dry box" consisting of an inverted 150 mm glass funnel is described by Fiebig, Spencer and McCoy. All operations are conducted through an open 16 x 50 mm slit cut in the side of the funnel and entrance of air is said to be prevented by an outward flow of commercial nitrogen gas. This apparatus obviously has limited usefulness but was apparently employed successfully for sampling moisture-and oxygen-sensitive materials.

Rowland and Whiting describe a miniature dry box used to investigate the electrical characteristics of semiconductor devices in controlled atmospheres. The enclosure consists of a glass tube with openings at both ends and a short side tube through which a micromanipulator is inserted. The supply of controlled

atmosphere is admitted through one end of the tube while the sample support table underneath the micromanipulator is moved by means of a rod inserted through an opening in the other end of the enclosure. The authors state that the apparatus can be swept out rapidly because of its small volume, permitting comparison of the effect of changes in gaseous ambiant over short time intervals.

Bloomer and Keenan patented a cylindrical glass glove box enclosure similar in shape to the small enclosure described by Rowland and Whiting but large enough (6" I.D.) so that gloves can be inserted through two of the three openings. Suitable valves are provided for evacuating the container so that it can be filled with a dry, inert gas.

An enclosure consisting of an 18-inch length of Pyrex glass pipe, 12 inches in diameter, fitted with cadmium-plated steel plates on the ends is described by Ketchen, et al. The end caps are clamped to the glass pipe and a gas-tight seal is effected by means of neoprene gaskets. Gloves are sealed in 6-inch openings in the end caps by means of a gas-tight ring and gasket arrangement and access to the enclosure is obtained by removing one of the end caps. A dry, inert atmosphere is provided by evacuating the container and gloves to 2 or 3 microns and filling with dry helium. This inert atmosphere box is said to be useful for handling alkali metals and other extremely hygroscopic materials.

C. Metal boxes

A small glove box constructed by welding a 10-inch length of 13-inch diameter iron pipe to a 17 x 17 inch steel base plate is described by Cassatt and Meinke. Two short lengths of 6-inch diameter pipe welded in the side of the larger pipe serve as glove ports. A clamp ring, fastened by long bolts to the base plate, holds a glass cover on top of the box. A moisture-proof seal is effected by use of a neoprene gasket lubricated with Dow-Corning stopcock grease between the glass cover plate and the machined top edge of the iron pipe. Flanges

welded to the glove port pipes permit dry box glove clamps to be bolted on. The cost of this box is said to be $85.

An apparatus for controlled atmosphere research is reported by Thomas and Lichtin. A metal bell jar 24-inches in diameter and 24-inches high is sealed to a 29 x 29 x 3/4 inch base plate by means of an O-ring and 4 locking bolts. Two sight ports are provided, one in the side for use when the operator is seated and one in the top for the standing operator. The bell jar is raised by means of a 1/4 ton hoist to permit insertion of material and equipment in the box. A number of threaded holes in the base plate allows introduction of needed services and removal of samples from the box. Cover plates are provided for the glove ports so that the gloves and the bell jar can be evacuated simultaneously. Both vacuum and controlled atmosphere operations can be performed in this apparatus but, of course, the gloves cannot be used while a vacuum exists within the box.

Tyree describes a box constructed of stainless steel, with a safety glass window, for weighing and other operations with hygroscopic materials. Dry nitrogen is introduced through a perforated stainless steel tube along the bottom of the box and leaves through a valve near the top of the box. The exit gas is monitored for dryness by means of a dew point meter described below.

Johnson reports the construction of a dry box made of 1/8" sheet steel having a vacuum-tight entrance port consisting of an 18-inch length of 8-inch diameter cast iron pipe. Hinged doors at each end of the entrance port are sealed by means of O-rings fitted in grooves in the doors and C-shaped clamps tightened by a handscrew through the center of the clamp.

A detailed description of an inert atmosphere glove box designed for chemical operations is reported by Sherfey. His box, shown in Figure 10 , is constructed around a welded-aluminum frame 34-inches high, 72-inches wide,

and 24 inches deep with plate glass or sheet-aluminum sides. Aluminum glove ports are inserted through the plate glass front of the box. The antechamber for introducing or removing materials and equipment is also made of aluminum and can be evacuated and filled with dry, inert gas. It is provided with a removable extension for introducing long articles into the box without opening both doors of the antechamber simultaneously. Many useful details of construction and operation and a list of manufacturers of commercially available parts and materials are included in this article.

Herring describes a box similar to that reported by Sherfey both in construction and operation. Both boxes require a pressure control system to maintain the pressure within the box near atmospheric pressure. This box is said to have been successfully used in operations connected with the synthesis of inorganic polymers from metal hydrides, halides, organo-metallic reagents, etc. An all-welded steel dry box described by Gibb and by Gibb, Goan and Damon is equipped with safety glass windows and a vacuum entrance lock which is provided with electrical leads for an electric heater so that it can be used as a vacuum oven. Exterior glove port covers are provided when the box is unused in order to minimize diffusion of air into the box and an interior port cover is used when gloves are changed.

A small, stainless steel glove box designed by Clampitt for evacuation and filling with an inert atmosphere has been very useful for high temperature work with molten salt mixtures at the Oak Ridge National Laboratory. One distinctive feature of this glove box design shown in Figure 11 is the cylindrical chamber extending downward from the floor of the glove box which may be heated externally, eliminating the need of a furnace within the glove box.

3. Drying Agents and Purification Systems

A few investigators report enclosures which provide only moderately dry atmospheres but most experimenters using glove boxes to obtain a dry

atmosphere require a sufficiently low moisture content so that low-efficiency drying agents are excluded from consideration. Tyree flushes his dry box with nitrogen dried by passage through concentrated H_2SO_4 and two P_2O_5 drying tubes. He also uses open dishes of P_2O_5 in the box and reports dew points of the order of $-50^{\circ}C$. Gibb reports the use of P_2O_5 on borosilicate glass wool, presumably to increase the surface area of P_2O_5 exposed to the gas. One problem connected with the use of P_2O_5 in a dry box, particularly when used in dishes, is that the powdered P_2O_5 soon becomes coated with sirupy phosphoric acid if much moisture is present in the box so that the atmosphere of the box is no longer in equilibrium with P_2O_5 but with another, less efficient, drying agent. Disposal of partially spent P_2O_5 is also a rather messy operation.

Booth and McIntyre report that BaO is a very efficient dèsiccant, with only about 1 mg of H_2O not absorbed in 10,000 liters of air. Blumer, Engelder and Silverman show that BaO is effective in absorbing water until it is completely exhausted. Coarse, granular BaO is converted by moisture to a fine powder of $Ba(OH)_2$ and this property has been utilized at the Mound Laboratory, Monsanto Chemical Company, and more recently, at the Oak Ridge National Laboratory, by suspending the BaO on a coarse screen over a pan. The unused BaO is thus kept separated from $Ba(OH)_2$ which drops into a pan and the experimenter can tell at a glance when more BaO must be supplied to the box. The only problems encountered in routine use of BaO as a desiccant in dry boxes is dispersion of finely divided $Ba(OH)_2$ and disposal of the $Ba(OH)_2$. Burial seems to be the most practical disposal method. Ketchen, et al., dried their helium by passing the gas at a pressure of 1000 lbs. per square inch through a charcoal trap cooled with liquid nitrogen. A commercial helium purification trap operating on this principle is available from A. D. Little

Company. They also used potassium or NaK (sodium-potassium eutectic alloy) exposed in the glove box as a getter.

Linde Molecular Sieves are reported by Breck, et al., to be effective adsorbents of moisture, oxygen and other atmospheric impurities. According to information furnished by the manufacturer, they are superior to activated alumina and silica gel in regard to water capacity, ultimate dryness and drying ability at high temperatures. Under static conditions, it would appear possible to dry gases to approximately 1.0 ppm H_2O, by volume. The Molecular Sieves have an advantage as compared to barium oxide in that they can be regenerated, but they share this advantage with other desiccants such as silica gel, activated alumina and magnesium perchlorate. The latter desiccant has been used rather extensively in laboratory work but has apparently not been used in dry boxes very much, possibly because of its cost.

A number of methods have been reported for removing oxygen from glove box atmosphere and some of the recommended methods remove moisture as well. Peak and Ritter report the use of a pool of NaK skimmed by a blade operated by an electric windshield wiper in order to keep the surface free of an oxide film. Gibb reports the use of NaK in a tower also containing Drierite to increase the surface area of the NaK and describes a liquid absorbent formed by adding 1 gm of sodium dispersed in mineral oil to 4 gms of benzophenone in a liter of mineral oil. The resulting blue colloidal suspension turns yellow when its oxygen capacity is exhausted. Gibb also details the use of a high voltage arc to provide finely divided sodium dust or smoke particles to react with gaseous impurities in the circulating glove box atmosphere. This purification method not only removes water and oxygen but hydrogen, carbon monoxide, and acidic gases as well. One charge of 75 gms of sodium is said to last 2-3 weeks.

When removal of nitrogen from the glove box atmosphere is desired, lithium is substituted for sodium. Johnson and Sherfey report the use of similar circulating purification systems for their glove boxes utilizing activated alumina, as the drying agent and hot copper (550-600°C) as the de-oxidizer. Gibb says that this copper purification method leaves gaseous impurities in the atmosphere which react with finely divided uranium. Johnson states that 20 minutes operation of his purification system reduced the dew point to -65°C but neither investigator reports data on the oxygen content of the glove box atmosphere. Sherfey and Herring used traps containing 4-8 mesh soda lime to remove acidic gases from the glove box atmosphere. Carbon dioxide is also removed by this trap. Herring also mentions heating calcium hydride to 400 or 500°C on a hot plate in the dry box to remove nitrogen from the atmosphere but gives no data on the effectiveness of this method of purification. Pascard and Fabre recommend the use of titanium-zirconium alloy (50 at %) turnings heated to 800°C. This treatment presumably is effective in removing nitrogen as well as oxygen from argon or helium atmosphere. Other purification systems for inert gases are discussed by Pascard and Fabre and by Kelman, et al.

4. Techniques

A. Detection and Measurement of Gaseous Impurities

(1) Qualitative tests

Herring reports use of $TiCl_4$ to give an indication of the presence of water vapor (white fumes) and yellow phosphorus, freshly deoxidized with CS_2, to test for the presence of oxygen. Gibb considers the use of $TiCl_4$ in a glove box objectionable and reports testing for moisture by means of a thin film of P_2O_5. He warms white phosphorus on a spatula to test for the presence of oxygen (white smoke) and also observes the time necessary for a film

to appear on a NaK surface as an indication of the purity of the glove box atmosphere. Keilholtz and Webster report the practice of using the appearance of white smoke of tungsten oxide from a heated tungsten filament as an indication of the presence of oxygen in their glove box atmosphere. Browning, Adams and Hemphill employ a polished copper surface to test for the presence of sulfur.

(2) Quantitative measurements

(a) Moisture

Tyree describes a dew point meter having a polished copper surface attached to a long copper tube. The temperature at which moisture condenses on the copper surface can be measured by means of a thermocouple attached to the underside of the polished disc. A portable, commercial dew point meter useful for the range room temperature to -80°F is available. An electrolytic method readily adaptable to continuous measurement and recording of moisture concentrations of a few parts per million is reported by Keidel. Only a few gaseous impurities such as ammonia and hydrogen fluoride interfere with moisture determinations by this method. Commercial instruments based on Keidel's development are available.

(b) Oxygen

Brady describes a colorimetric method for continuously measuring oxygen concentrations in an inert gas stream, but the sensitivity of his method under continuous flow conditions is much less than that attainable in discontinuous analyses. Cohn describes a continuous analysis method based on addition of hydrogen to the impure gas stream and measuring the difference in temperature before and after passage through a catalyst bed. He reports a limit of detection of 0.0002% oxygen but states that his apparatus was generally used in the range 0 to 0.1% or 0 to 0.2% oxygen by volume. A galvanic method

originated by Hersch was further developed by Bomyer and Hutt who report that oxygen in the range 0 to 600 ppm can be determined by this method to within 1/2 ppm, or 5%, whichever is greater. This method appears to be very promising for continuously monitoring low oxygen concentrations in an inert atmosphere glove box. Several commercial oxygen analyzers are available.

B. Initial Operation of Inert Atmosphere Glove Boxes

Glove boxes built for evacuation present no special difficulty in obtaining an inert atmosphere, provided adequately pure gas is available to fill the box after it is evacuated. It is generally considered desirable to empty and fill a vacuum glove box with inert gas several times after it has been open to the atmosphere. The removal of air from a box which must be maintained at or near atmospheric pressure is a more difficult problem. Cohen and Peele performed an investigation to determine the optimum procedure for obtaining an inert atmosphere in a glove box by sweeping an inert gas through the box. They report that argon and other gases heavier than air should be introduced at the bottom of the box and removed at the top while the reverse is true for helium and other gases lighter than air. They also state that purging efficiency increases with increasing gas flow rate and is reduced by use of a circulating fan to mix the gases within the box. Their data show that 1.5 to 5 box volumes of argon, depending on the flow rate used, were required to reduce the oxygen content of their box to 0.1% and that about 4 to 5 box volumes of helium would give the same degree of atmosphere purification. No data are given in this report concerning the ultimate purity obtainable by the purging method but it would appear that a rather large volume of inert gas would be required to attain a high degree of glove box atmosphere purity in this manner. Boxes equipped for recirculation of the glove box atmosphere through a purification system require a method for avoiding over-loading the purification system after the box is open

to the atmosphere. Sherfey, Gibb and others report the use of a balloon inflated inside the glove box to expel most of the air. The balloon is deflated by admission of inert gas in the space between the balloon wall and the interior wall of the glove box.

C. Leak Testing

Inert atmosphere glove boxes need to have a very low leak rate in order to minimize contamination of the glove box atmosphere. W. K. Curtis reports a specification of 0.05 to 0.5% of box volume per hour leak rate when the box is subjected to a negative pressure of 4 in. w.g. Several investigators have leak tested their vacuum enclosures by filling them with freon and using a freon sniffer on the outside of the box to find leaks. Others have reversed this procedure, particularly for testing boxes under vacuum conditions, by placing a halogen detector inside the box and painting suspected joints with chloroform or other volatile halogen-containing solvent. Helium "sniffers" have also been used to leak test glove boxes pressurized with helium. A leak testing technique based upon accurate determinations of the oxygen content of a glove box atmosphere is described by Smith and Sheridan and the AERE direct leak test is discussed by Bicknell.

D. Introduction and Removal of Materials and Equipment

Most glove boxes are provided with locks, and the size of equipment that can be introduced into the box without the necessity of removing a window is limited by the size of the lock. Sherfey reports the use of a removable extension for the antechamber of his glove box shown in Figure 9 , which permits the introduction of long objects through the lock. He also describes the use of an ingenious storage device which consists essentially of a counter-balanced elevator mounted on top of the glove box. In order to minimize the introduction of air into an inert atmosphere glove box during transfers into and out of the

box, transfer locks are generally equipped for evacuation and filling with an inert gas. Gibb discusses some of the precautions to be observed in using vacuum locks, including opening or evacuating containers which will not withstand an internal pressure of one atmosphere, and introducing volatile solvents only in containers which will prevent their vaporization within the box. Dry box locks are sometimes equipped for flushing with a dry gas and a dry air atmosphere may also be obtained by allowing the atmosphere in the lock sufficient time to come to equilibrium with an open dish of P_2O_5 or other drying agent. This procedure requires more patience for effective use than most investigators possess.

E. Weighing in a Dry Atmosphere

Tyree discusses problems encountered in operating an analytical balance in a dry atmosphere (dew point -50°C or less). He states that electrostatic charges persist on glassware and other insulators in a dry atmosphere and that Pyrex glassware is worse in this respect that Kimble ware. He employs a Reco Neutro-stat over the balance pan to discharge the static electricity and also grounds the dry box and working parts of the balance.

F. Pressure Control in Atmospheric Pressure Glove Boxes

Sherfey mentions the use of a combination oil manometer-pressure relief device on his glove box to prevent pressure differences greater than 0.5 lb/sq. in. between the box and the surrounding atmosphere. Herring maintains a constant pressure in his glove box by means of a mercury-filled U-tube differential pressure switch system. Johnson uses electrical switches mounted at knee level to activate magnetic switches connecting the glove box to a tank of nitrogen or to a vacuum pump.

Bibliography

Abraham, B. M., B. B. Brady, W. R. Davidson, F. Hageman, I. Karle, J. J. Katz, and M. J. Wolf, "Preparation and Properties of Plutonium Chlorides and Oxychlorides", Paper 6.7 in The Transuranium Elements, G. T. Seaborg, J. J. Katz, and W. M. Manning, Editors, NNES Series, Div. IV, Vol. 14B, McGraw-Hill Book Company, Inc., New York (1949).

Ashburn, A. G., A. W. Elson, and R. A. G. Welsher, Chapter 2, Section I, in G. N. Walton, Ed., Glove Boxes and Shielded Cells, Butterworths, London (1958).

Bagnall, K. W. and W. T. Spragg, Atomics, 6, 71, 125 (1955).

Bagnall, K. W., Chem. Soc. London Quart. Rev., 11, 30 (1957).

Bagnall, K. W., Chapter 7, Section I, in G. N. Walton, Ed., Glove Boxes and Shielded Cells, Butterworths, London (1958).

Bagnall, K. W., D. S. Robertson, S. J. G. Parkes, P. S. Robinson, and M. A. A. Stewart, Nucl. Eng., 4, 373 (1959).

Ball, J. G. and W. B. H. Lord, J. Inst. Metals, 86, 369 (1958).

Ball, J. G., UKAEA Report AERE-C/R-958, G. R. Hall, Editor, March 3, 1952.

Barton, C. J., R. A. Strehlow, and W. R. Grimes, USAEC Report ORNL-2530, June 11, 1958.

Barton, C. J., J. Phys. Chem., 64, 305 (1960).

Barton, C. J. and R. A. Strehlow, J. Inorg. Nucl. Chem., in press.

Barton, C. J., R. A. Strehlow, and J. D. Redman, "Phase Relations in the Systems NaF-PuF_3 and NaF-CeF_3", paper presented at Southeastern Meeting of the American Chemical Society, Birmingham, Alabama, November 3, 1960.

Bennellick, E. J., Chapter 1, Sections III and IV, in G. N. Walton, Ed., Glove Boxes and Shielded Cells, Butterworths, London (1958).

Benz, R., M. Kahn, and J. A. Leary, J. Phys. Chem., 63, 1983 (1959).

Bicknell, J. H., Chapter 2, Section III, in G. N. Walton, Ed., Glove Boxes and Shielded Cells, Butterworths, London (1958).

Bjorkland, C. W., J. G. Beavis, J. A. Leary, and K. A. Walsh, J. Phys. Chem., 63, 1774 (1959).

Bloomer, J L. and C. W. Keenan, U. S. Patent 2,862,307, December 2, 1958.

Blomgren, R. A. USAEC Report TID-7599, p. 543, December, 1960.

Blumer, M., C. J. Engelder and A. Silverman, Ind. Eng. Chem., Anal. Ed., 4, 339 (1932).

Bomyer, P. and E. C. Hutt, UKAEA Report AERE-D-14/54, February 22, 1954.

Booth, H. S. and L. H. McIntire, Ind. Eng. Chem., Anal. Ed., 2, 12 (1930).

Boyle, J. G., Chapter 13, Section III, in G. N. Walton, Ed., Glove Boxes and Shielded Cells, Butterworths, London (1958).

Breck, D. W., W. G. Eversole, R. M. Milton, T. B. Reed and T. L. Thomas, J. Am. Chem. Soc., 98, 5963 (1956).

Browning, W. E., R. E. Adams, and H. L. Hemphill, USAEC Report ORNL-2413, p. 119, August 31, 1957.

Burns, R. H. and H. Wells, Chapter 4, in G. N. Walton, Ed., Glove Boxes and Shielded Cells, Butterworths, London (1958).

Burns, R. H., J. H. Clarke, and H. Wells, Chapter 3, Section I, in G. N. Walton, Ed., Glove Boxes and Shielded Cells, Butterworths, London (1958).

Bowersox, D. F. and J. A. Leary, J. Inorg. Nucl. Chem., 9, 108 (1959).

Brady, L. J,, Anal. Chem., 20, 1033 (1948).

Cantelow, H. P., Chem. Eng., 64, 294 (1957).

Cantelow, H. P., Chem. Eng., 66, 188 (1959).

Cantelow, H. P., L. E. Miles, and D. B. Abram, Trans. Am. Nucl. Soc., 3, (2) 568 (1960).

Cardwell, A., Oak Ridge National Laboratory, private communication.

Case, F. N., USAEC Report Y-659, September 1, 1950.

Case, F. N. and F. M. Scheitlin, Oak Ridge National Laboratory, unpublished work.

Case, F. N. and J. T. Barker, Oak Ridge National Laboratory, unpublished work.

Cassatt, W. A., Jr. and W. W. Meinke, Nucleonics, 13 (5) 63, (1955).

Catherall, A., Chapter 3, Section II, in G. N. Walton, Ed., Glove Boxes and Shielded Cells, Butterworths, London (1958).

Catlin, J. R., L. Coward, D. Darling, W. T. Spragg, and C. G. Webb, UKAEA Report AERE-C/M-152, 1952.

Catlin, J. R. and F. Allison, UKAEA Report AERE-ES/R-1895, 1956.

Christensen, E. L. and L. J. Mullins, USAEC Report LA-1431, October 15, 1952.

Chubakov, A. A., V..I. Polikarpov, and V. A. Kuleshova, Proc. of 2nd U.N. Int. Conf. on Peaceful Uses of Atomic Energy, Geneva, Vol. 23, 354 (1958).

Clampitt, B. H., formerly of the Oak Ridge National Laboratory, unpublished work.

Coffinberry, A. S. and M. B. Waldron, "A Review of the Physical Metallurgy of Plutonium", Chapter 4 in H. M. Finniston and J. P. Howe, Eds., Metallurgy and Fuels. Progress in Nuclear Energy, Series V, McGraw-Hill Book Company, New York (1956).

Coleman, L. F., J. H. Schraidt, R. L. Breyne, and J. V. Natale, Trans. Am. Nucl. Soc., 3 (2) 566 (1960). See also USAEC Report TID-7599, December, 1960.

Comstock, A. A. and R. B. Gibney, USAEC Report LA-1348, January 21, 1952.

Collins, D. C., USAEC Report DP-188, November, 1956.

Cramer, E. M. and F. W. Schonfeld, Proc. of the 2nd U.N. Int..Conf. on Peaceful Uses of Atomic Energy, Geneva, Vol. 17, 668 (1958).

Conway, J. G. and M. F. Moore, Anal. Chem., 24, 413 (1952).

Cohn, G., Anal. Chem., 19, 833 (1947).

Cohen, S. I. and J. M. Peele, USAEC Report ORNL-CF-55-10-132, October 25, 1955.

Cox, E. J. and R. F. Barker, USAEC Report LA-1530, June 12, 1953.

Curtis, R. L., USAEC Report Y-964, May 19, 1953.

Curtis, W. K., Nucl. Eng., 2, 381 (1957).

Dawson, J. K., R. M. Elliot, R. Hurst, and A. E. Truswell, J. Chem. Soc. (London), 1954, 558.

Davis, D. A., J. E. Ayer, and R. M. Mayfield, USAEC Report ANL-5743, May, 1957.

Dean, J. and A. B. Ritchie, UKAEA Report AERE-C/R-958, G. R. Hall, Ed., March 3, 1952.

Dempsey, E. and A. E. Kay, J. Inst. Metals, 86, 379 (1958).

Dempsey, E., J. Sci. Instr., 36, 84 (1959).

Dolphin, R. J. V., Chapter 12, Section I, in G. N. Walton, Ed., Glove Boxes and Shielded Cells, Butterworths, London (1958).

Dunster, H. J. and E. J. Bennellick, Atomics, 6, 312 (1955).

Dunster, H. J., Chapter 1, Section I, in G. N. Walton, Ed., Glove Boxes and Shielded Cells, Butterworths, London (1958).

Dunster, H. J., J. Howells, and W. L. Templeton, Proc. of 2nd U.N. Int. Conf. on Peaceful Uses of Atomic Energy, Geneva, Vol. 18, 296 (1958).

DuTemple, O. J., H. O. Smith, and J. H. Schraidt, Paper presented at Sixth Hot Laboratories and Equipment Conf., Chicago, Illinois, March 19-21, 1958.

Eichelberger, J. F., K. C. Jordan, S. R. Orr and J. R. Parks, USAEC Report AECD-3515, February 10, 1953.

Engle, P. M., R. W. Endebrock, and G. C. Cox, "Polonium from Irradiated Bismuth: Studies on Separation by Distillation", in H. V. Moyer, Ed., Polonium, USAEC Report TID-5221, July, 1956.

Fiebig, E. C., E. L. Spencer, R. N. McCoy, Anal. Chem., 29, 861 (1957).

Florin, A. E., I. R. Tannenbaum, and J. F. Lemons, J. Inorg. Nucl. Chem., 2, 368 (1956).

Franklin, A. F. and S. E. Voltz, Anal. Chem., 27, 865 (1955).

Freeman, J. H., K. J. Hill and M. L. Smith, UKAEA Report AERE-R-3043, August, 1959.

Fried, S. and N. Davidson, J. Am. Chem. Soc., 70, 3539 (1948).

Fried, S. and N. R. Davidson, "Studies on the Dry Chemistry of Plutonium", Paper 6.11 in The Transuranium Elements, G. T. Seaborg, J. J. Katz, and W. M. Manning, Eds., NNES Series Div. IV, Vol. 14B, McGraw-Hill Book Company, Inc., New York (1949).

Fried, S., J. Am. Chem. Soc., 73, 416 (1951).

Garden, N. B., Building Research Advisory Board, Nat. Res. Council Report NP-3875, May, 1952. See also Proc. of 1st Int. Conf. on Peaceful Uses of Atomic Energy, Geneva, Vol. 7, 62 (1956).

Goode, J. M., "Quartz Fiber Microbalance" in H. V. Moyer, Ed., Polonium, USAEC Report TID-5221, p. 239, July, 1956.

Gibb, T. R. P., Jr., E. J. Goon and E. B. Damon, USAEC Report NYO-3916, June 15, 1954.

Gibb, T. R. P., Jr., Anal. Chem., 29, 583 (1957).

Gruen, D. M., S. Fried, P. Graf, and R. L. McBeth, Proc. of 2nd U.N. Int. Conf. on Peaceful Uses of Atomic Energy, Geneva, Vol. 28, 112 (1958).

Gifford, J. F., Nucleonics, 12, (11), 54 (1954).

Glanville, D. E., D. W. Grant, and G. L. Strachan, UKAEA Report AERE-C/R-2188, February 28, 1957.

Glanville, D. E. and D. W. Grant, UKAEA Report AERE-C/R-2155, May, 1957.

Grange, A. and W. B. H. Lord, Chapter 10, Section II, in G. N. Walton, Ed., Glove Boxes and Shielded Cells, Butterworths, London (1958).

Gresham, A. T., Chapter 2, Section IV, in G. N. Walton, Ed., Glove Boxes and Shielded Cells, Butterworths, London (1958).

Grison, E., R. Abramson, F. Anselin and N. Monti, French Atomic Energy Commission Report CEA-786, January, 1958.

Gupton, E. D. and J. W. Youngblood, Oak Ridge National Laboratory, unpublished work.

Henry, H. F., USAEC Report K-1380, August 14, 1958.

Herring, D. L. Naval Ordinance Laboratory Report NOLC-318, January 13, 1956.

Hersch, R., Nature, 169, 792 (1952).

Hindman, J. C., D. Cohen, and J. C. Sullivan, Proc. of 1st Int. Conf. on Peaceful Uses of Atomic Energy, Geneva, Vol. 7, 345 (1956).

Holliday, A. K., UKAEA Report AERE-C/R-958, p. 8, G. R. Hall, Ed., March 3, 1952.

Hurst, G. J., R. H. Ritchie, and H. N. Wilson, Rev. Sci. Inst., 22, 981 (1951).

Hughes, A., UKAEA Report IGO-TM-CA-015, November, 1957.

Hughes, J., Argonne National Laboratory, private communication.

Hyde, E. K., Proc. of 1st Int. Conf. on Peaceful Uses of Atomic Energy, Geneva, Vol. 7, 281 (1956).

Hyde, K. R. and D. J. O'Connor, Nucleonics, 15 (1) 68 (1958).

Jackson, C., T. W. Hodge, D. H. Swingler and A. J. Smith, UKAEA Report AERE-R-3067, October, 1959 and AERE-R-3276, April, 1960.

Jehanno, C., A. Blanc, C. Lallement and G. Roux, Proc. of 2nd U.N. Int. Conf. on Peaceful Uses of Atomic Energy, Geneva, Vol. 23, 372 (1958).

Jette, E. R. and A. S. Coffinberry, "Plutonium and its Alloys", Chapter 1.15 in C. R. Tipton, Ed., General Properties of Materials, The Reactor Handbook, Vol. 3, Section 1, AECD-3647, March, 1955.

Johnson, R. E., J. Chem. Educ., 34, 80 (1957).

Kaulitz, D. C. and W. E. Roake, USAEC Report HW-26500, February 6, 1955.

Keidel, F. A., Anal. Chem., 31, 2043 (1959).

Keilholtz, G. W., Oak Ridge National Laboratory, and C. C. Webster, formerly of the Oak Ridge National Laboratory, unpublished work.

Ketchen, E. E., F. A. Trumbore, W. E. Wallace and R. S. Craig, Rev. Sci. Instr., 20, 524 (1949).

Kelman, L. R., W. D. Williamson, A. D. Shuck, and R. C. Goertz, USAEC Report ANL-5509, December, 1955. See also Nucleonics, 14, No. 3, p. 61 ; No. 4, p. 65; and No. 5, p. 77, 1956.

Kirk, P. L., R. S. Rosenfels, S. Fried and H. L. Baumbach, USAEC Report CK-1145, December, 1943.

Kirk, P. L., R. Craig, J. E. Gullberg, and R. Q. Boyer, Anal. Chem., 19, 427 (1947).

Lacey, P. M. C., Chapter 6, Section IV, in G. N. Walton, Ed., Glove Boxes and Shielded Cells, Butterworths, London (1958).

Latham, R. L. and P. B. Murtagh, Chapter 12, Section III, in G. N. Walton, Ed., Glove Boxes and Shielded Cells, Butterworths, London (1958).

Lawroski, S., R. C. Vogel, and V. H. Munuecke, USAEC Report ANL-6183, p. 135, 1960.

Lee, J. A., P. G. Mardon, J. M. North and M. B. Waldron, Chapter 10, Section I, in G. N. Walton, Ed., Glove Boxes and Shielded Cells, Butterworths,

Leary, J. A., K. Benz, D. B. Bowersox, C. W. Bjorklund, K. W. R. Johnson, W. J. Maraman, L. J. Mullins, and J. G. Reavis, Proc. of 2nd U. N. Int. Conf. on Peaceful Uses of Atomic Energy, Geneva, Vol. 17, 376 (1958).

Leuze, R. E., Oak Ridge National Laboratory, private communication.

Linde Air Products Company, "Technical Information on Desiccants and on Drying of Gases and Liquids".

Little, A. D., Company, USAEC Report NYO-4527, August 18, 1953.

Loeb, D. B., A. E. Martin, P. C. Nothaft, S. L. Simons, and J. R. Wilson, USAEC Report LA-502, August 15, 1947.

Lord, W. B. H., and M. B. Waldron, J. Inst. Metals, 86, 308 (1958).

Love, L. O., W. A. Bell, J. E. Keeton, W. K. Prater, and F. M. Scheitlin, "Protective Measures in Connection with Electromagnetic Separation of Radioisotopes at the ORNL", in F. Viehbock, Ed., Proc. of the Symposium on Electromagnetic Separation of Radioactive Isotopes, Vienna, May, 1960.

Mackintosh, A., Building Research Advisory Board, National Research Council Report NP-3875, May, 1952.

Mandelberg, C. J., H. K. Rae, R. Hurst, G. Long, D. Davies, and R. E. Francis, J. Inorg. Nucl. Chem., 2, 358 (1956).

Martin, A. J. and K. L. Edwards, J. Sci. Instr., 36, 170 (1959).

Massey, B. J., Oak Ridge National Laboratory, private communication.

Maton, W. R. E., UKAEA Report AERE-C/R-1004, August 16, 1952.

McNeese, W. D. and W. J. Maraman, Ind. Eng. Chem., 52 (2) 79a (1960).

Metz, C. F., Proc. of 2nd U. N. Int. Conf. on Peaceful Uses of Atomic Energy, Geneva, Vol. 17, 681 (1958).

Maraman, W. J., Proc. of 2nd U. N. Int. Conf. on Peaceful Uses of Atomic Energy, Geneva, Vol. 17, 676 (1958).

Malecha, R. F., H. O. Smith, J. H. Schraidt, J. V. Natale, N. E. Ross, and H. O. Brown, Jr., Trans. Am. Nucl. Soc., 3 (2) 565 (1960). See also Report TID-7599, December, 1960.

Marchbanks, M. J., Chapter 1, Section V, in G. N. Walton, Ed., Glove Boxes and Shielded Cells, Butterworths, London (1958).

Miles, G. L., UKAEA Report AERE-C/R-958, G. R. Hall, Ed., March 3, 1952.

Moore, A., D. B. Wright, and A. J. Martin, J. Sci. Instr., 35, 301 (1958).

Morgan, A. N., Jr., R. D. Baker, W. C. Hazen, A. V. Hendrickson, W. D. McNeese and R. L. Thomas, Proc. of 2nd U.N. Int. Conf. on Peaceful Uses of Atomic Energy, Geneva, Vol. 17, 537 (1958).

Morgan, K. Z., "Techniques of Personnel Monitoring and Radiation Surveying", in A. H. Snell, Ed., Handbook on Nuclear Instruments and Techniques, Nat. Res. Council, in press.

Moulthrop, H. A., USAEC Report HW-25108, October 24, 1952.

North, J. M., Nucl. Eng., 3, 293 (1958).

Parker, G. W., G. E. Creek, W. J. Martin, and C. J. Barton, USAEC Report ORNL-CF-60-6-24, June, 1960.

Pascard, R. and R. Fabre, Chapter 6, Section I, in G. N. Walton, Ed., Glove Boxes and Shielded Cells, Butterworths, London (1958).

Paulsen, F. R., Atomics, 8, 178 (1957).

Peak, R. and D. M. Ritter, Rev. Sci. Instr., 27, 109 (1956).

Peck, J. S., Trans. Am. Nucl. Soc., 3 (2) 567 (1960).

Pearce, K. H. and P. G. Mardon, J. Sci. Instr., 36, 457 (1959).

Prevot, I.,J. Corpel, and P. Regnaut, Proc. of 2nd U.N. Int. Conf. on Peaceful Uses of Atomic Energy, Geneva, Vol. 17, 96 (1958).

Rainey, C. T., USAEC Report UCRL,1391, June 8, 1951.

Reynolds, P. G., UKAEA Report AERE-C/M-152, 1952, Appendix.

Rhinehammer, T. B., D. E. Etter and L. V. Jones, "Phase Studies of Plutonium-Copper and Plutonium-Copper-Cerium Systems by Differential Thermal Analysis", paper presented at 1st Conf. on Nuclear Reactor Chemistry, Gatlinburg, Tennessee, October, 1960.

Roberts C. P., Building Research Advisory Board, National Research Council, Report NP-3875, May, 1952.

Roesch, W. C. and J. W. Baum, Proc. of 2nd U.N. Int. Conf. on the Peaceful Uses of Atomic Energy, Geneva, Vol. 23, 142 (1958).

Rogers, A. J., "Calorimetry", Chapter 10, in H. V. Moyer, Ed., Polonium, USAEC Report TID-5521, July, 1956.

Rowan, J. H., Anal. Chem., 28, 402 (1956).

Rowland, R. P., and G. W. Whiting, J. Sci. Instr., 34, 207 (1957).

Sawle, D. R., USAEC Report UCRL-4556, August, 1955.

Schnitzlein, J. G. and D. F. Fischer, "Plutonium Ignition Studies", in USAEC Reports ANL-6145 and ANL-6183, 1960.

Schnitzlein, J. G., P. J. Pizzolato, H. A. Porte, J. D. Bingle, D. F. Fischer, L. W. Mishler and R. C. Vogel, USAEC Report ANL-5974, April, 1959.

Schonfeld, F. W., R. E. Tate and W. J. Maraman, Chapter 9, Section I, in G. N. Walton, Ed., Glove Boxes and Shielded Cells, Butterworths, London (1958).

Schulte, H. F. and D. D. Meyer, Proc. of 2nd U.N. Int. Conf. on Peaceful Uses of Atomic Energy, Geneva, Vol. 23, 206 (1958).

Seaborg, G. T., J. J. Katz, W. M. Manning, Eds., The Transuranium Elements; Research Papers, Vol. 14B, Div. IV, National Nuclear Energy Series, McGraw-Hill Book Company, New York (1949).

Schwendiman, L. C. and J. W. Healy, Proc. of 2nd U.N. Int. Conf. on Peaceful Uses of Atomic Energy, Geneva, Vol. 23, 144 (1958).

Seaborg, G. T. and J. J. Katz, The Actinide Elements, Vol. 14A, Div. IV, National Nuclear Energy Series, McGraw-Hill Book Company, Inc., New York (1954).

Sherfey, J. M., Ind. Eng. Chem., 46, 435 (1954).

Shuck, A. B. and R. M. Mayfield, USAEC Report ANL-5499, January, 1956. See also Nucl. Energy Engineer, 13, 361 (1959).

Shuck, A. B., Nucl. Energy Engineer, 13, 411 (1959).

Silverman, L., Building Research Advisory Board, Nat. Res. Council Report NP-3875, p. 40, May, 1952.

Smith, S. E. and M. B. Sheridan, Chapter 6, Section III, in G. N. Walton, Ed., Glove Boxes and Shielded Cells, Butterworths, London (1958).

Smith, W., Building Res. Advisory Board, Nat. Res. Council Report, NP-3875, p. 43, May, 1952.

Spaa, J. H., Health Physics, 4(1) 25 (1960).

Spaa, J. H., Proc. of 2nd U.N. Int. Conf. on Peaceful Uses of Atomic Energy, Geneva, Vol. 21, 169 (1958).

Staritzky, E. and A. L. Truitt, "Optical Properties of Some Compounds of Uranium, Plutonium and Related Elements", Chapter 19, in G. T. Seaborg and J. J. Katz, Eds., The Actinide Elements, NNES Series, Div. IV, Vol. 14A, McGraw-Hill Book Company, Inc., New York (1954).

Steunenberg, R. K. and R. C. Vogel, Proc. of 2nd U.N. Int. Conf. on Peaceful Uses of Atomic Energy, Geneva, Vol. 17, 438 (1958).

Steindler, M. J., D. V. Steindl, and R. K. Steunenberg, USAEC Report ANL-5874, June, 1958.

Steindler, M. J., USAEC Report ANL-6021, June, 1959.

Stewart, D. C. Proc. of 1st Int. Conf. on Peaceful Uses of Atomic Energy, Geneva, Vol. 7, 321 (1956).

Susskind, H., Nucleonics, 12 (11) 61 (1954).

Tait, G. W. C., Nucleonics, 14, (1) 53 (1956).

Terrill, J. G., Building Research Advisory Board, National Research Council, Report NP-3875, May, 1952.

Thaxter, M. D., H. P. Cantelow, and C. Burk, USAEC Report UCRL-3635, January 7, 1957.

Thomas, G. R. and N. N. Lichtin, Rev. Sci. Instr., 23, 738 (1952).

Tyree, W. Y., Jr., J. Chem. Educ., 31, 603 (1954).

USAEC Accident and Fire Prevention Information, Issue No. 21, October 28, 1955.

(a) USAEC Serious Accident Reports, Issue No. 92, December 14, 1955.

(b) USAEC Serious Accident Reports, Issue No. 129, October 28, 1957.

(c) USAEC Serious Accident Reports, Issue No. 130, November 27, 1957.

(d) USAEC Serious Accident Reports, Issue No. 169, November 25, 1960.

U.S. Dept. of Commerce, Nat. Bureau of Standards Handbook 69, June 5, 1959.

Van Amerongen, G. J., J. Appl. Phys., 17, 972 (1946).

Waine, P., Chapter 5, Section II, in G. N. Walton, Ed., Glove Boxes and Shielded Cells, Butterworths, London (1958).

Webb, L. A. and S. I. Softky, Rev. Sci. Instr., 24, 472 (1953).

Welsher, R. A. G., UKAEA Report AERE-E/M-78, See also Chapter 2, Section I, in G. N. Walton, Ed., Glove Boxes and Shielded Cells, Butterworths, London (1958).

Welsher, R. A. G., UKAEA Report AERE-E/M-70, June 30, 1953.

Westrum, E. F., Jr., and L. Eyring, J. Am. Chem. Soc., 73, 3399 (1951).

Westrum, E. F., Jr. and L. Eyring, J. Am. Chem. Soc., 73, 3396 (1951).

Westrum, E. F., Jr., and J. C. Wallman, J. Am. Chem. Soc., 73, 3530 (1951).

Wells, H., I. Aitken and G. Wallis, UKAEA Report AERE-E/R-1022, August, 1952.

Wick, O. J. and I. D. Thomas, Proc. of 2nd U.N. Int. Conf. on Peaceful Uses of Atomic Energy, Vol. 17, 531 (1958).

Weinstock, B. and J. G. Malm, Proc. of the 2nd U.N. Int. Conf. on Peaceful Uses of Atomic Energy, Geneva, Vol. 28, 125 (1956).

Wittenberg, L. J., D. Ofte, and L. V. Jones, "Density and Viscosity of Liquid Plutonium and its Alloys", paper presented at 1st Conf. on Nuclear Reactor Chemistry, Gatlinburg, Tennessee, October, 1960.

Williamson, G. K., D. M. Poole, and J. A. C. Marples, UKAEA Report AERE-M/R-1990, June, 1956.

Wilson, R. H., Univ. of Rochester Atomic Energy Report UR-265, July 29, 1953.

Wilkening, M. H., Rev. Sci. Instr., 23, 13 (1952).

Acknowledgements

The author wishes to thank several of his colleagues at the Oak Ridge National Laboratory, including R. E. Leuze, G. W. Keilholtz, and W. E. Browning, who reviewed the manuscript of this paper and made helpful suggestions. He also wishes to acknowledge help received through discussions on several topics with M. J. Steindler and C. H. Youngquist at the Argonne National Laboratory; W. J. Maraman, C. F. Metz, J. A. Leary, and others at Los Alamos Scientific Laboratory; and F. N. Case and J. C. White at the Oak Ridge National Laboratory. Finally, this review would not have been possible without the active encouragement of W. R. Grimes, Director of the Reactor Chemistry Division, Oak Ridge National Laboratory.

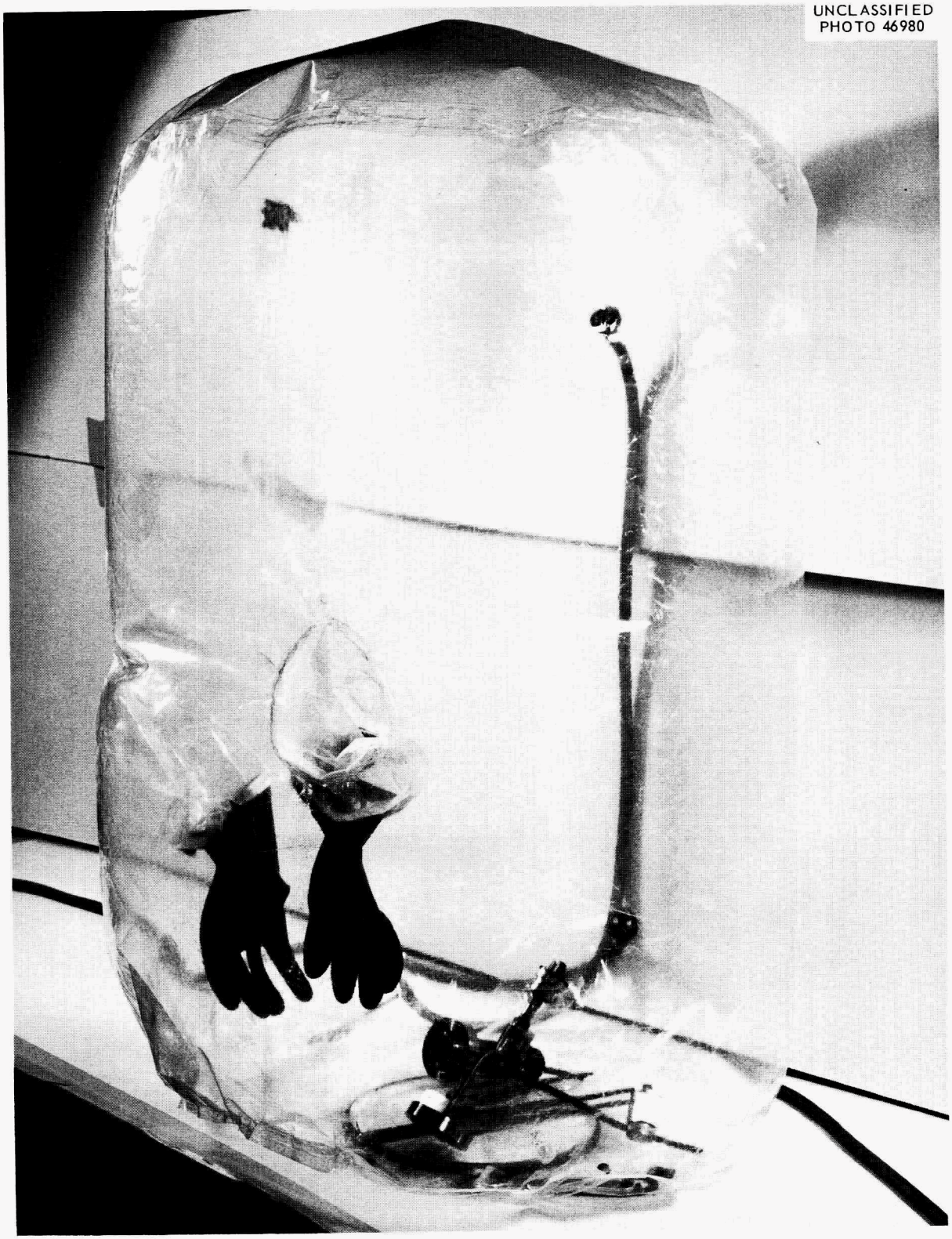

Figure 1. Flexible plastic enclosure for handling small amounts of α- and β-active materials.

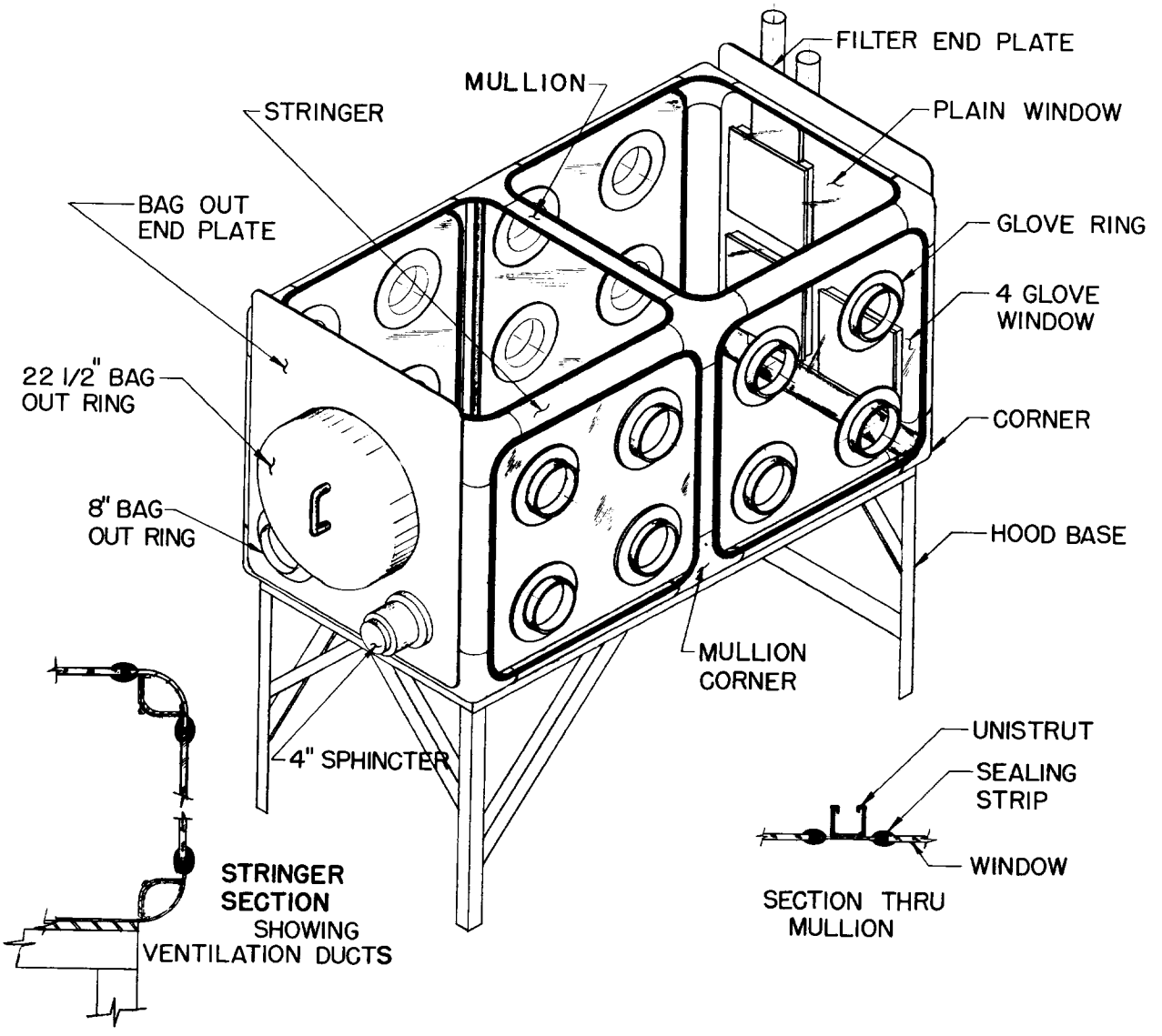

Figure 2. Cenham-2 Module Unit Developed at Argonne National Laboratory.

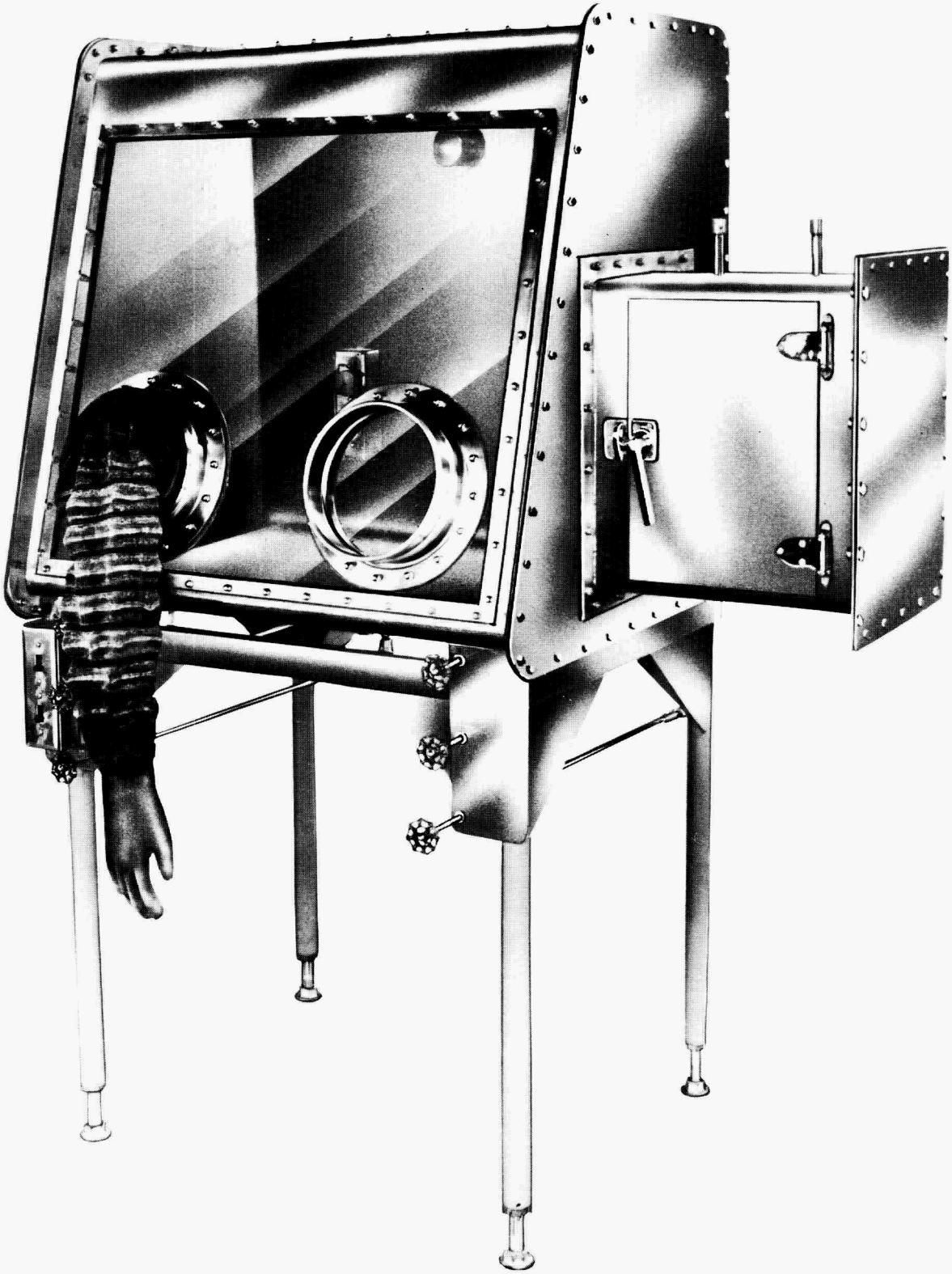

Figure 3. S. Blickman, Inc., clear view sloping front safety enclosure.

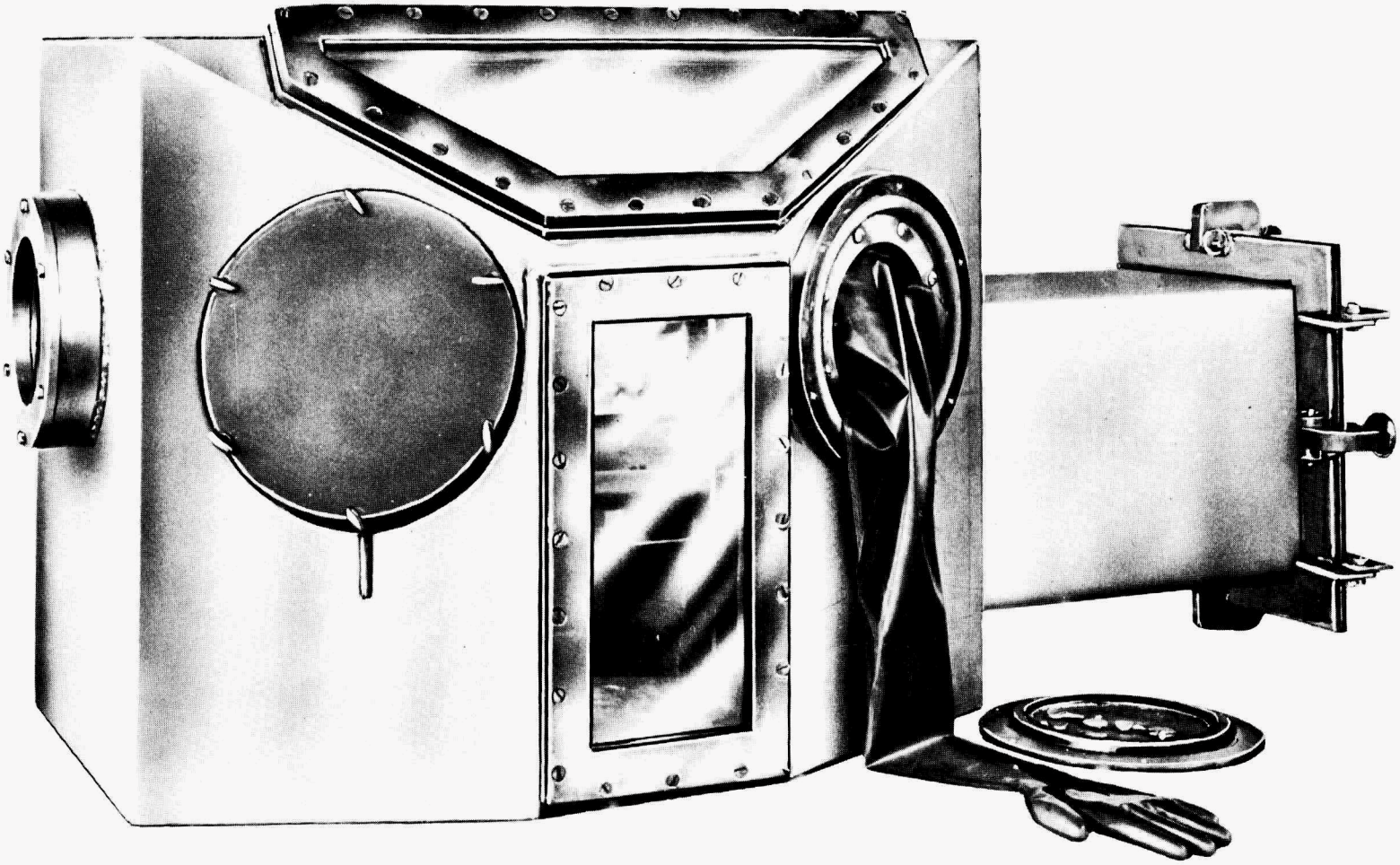

Figure 4. S. Blickman, Inc., stainless steel vacuum dry box.

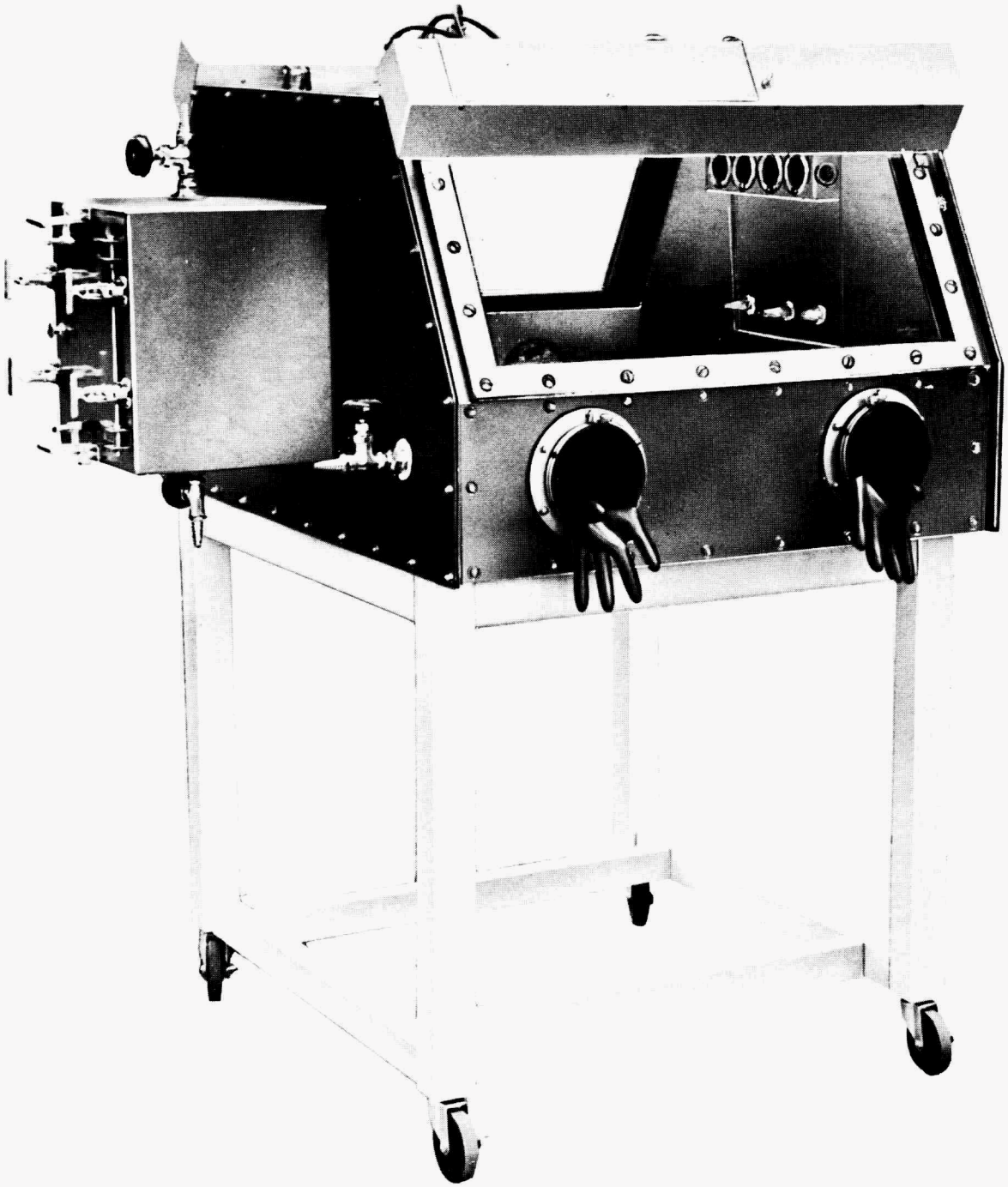

Figure 5. Kewaunee Manufacturing Company double face controlled atmosphere glove box.

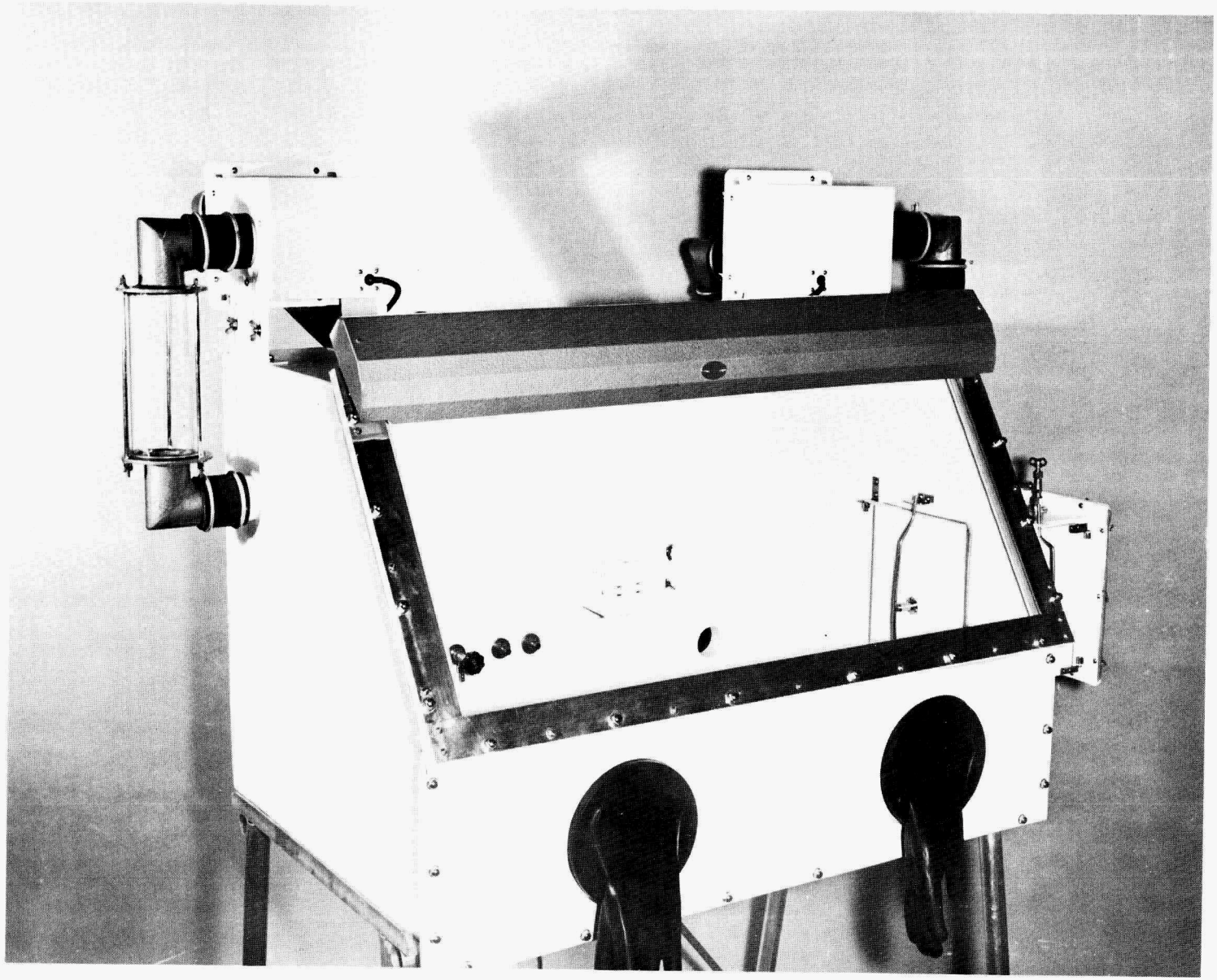

Figure 6. Scientific Service, Inc., Berkeley type glove box.

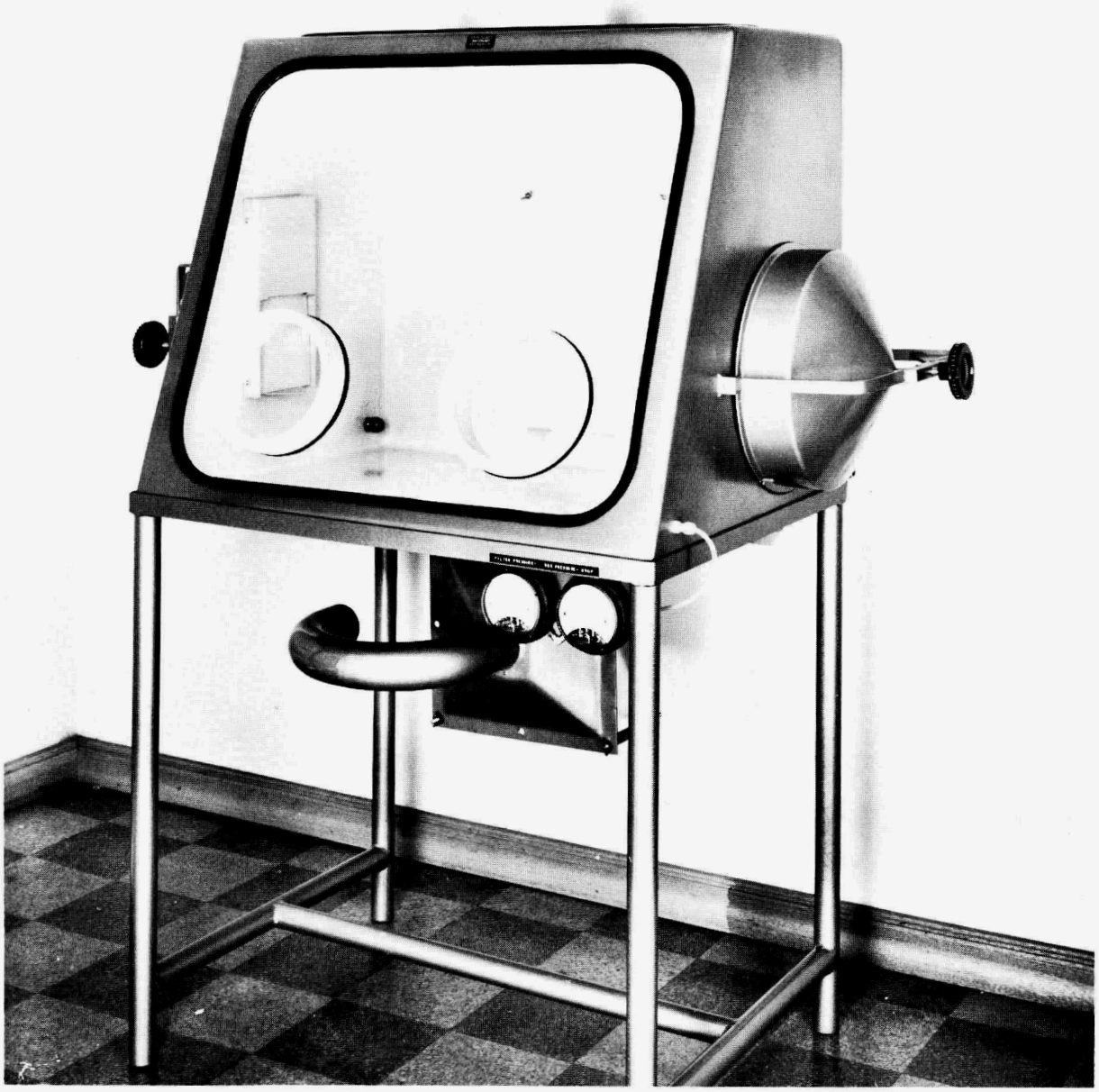

Figure 7. Dublin Industries, Inc., Eringard enclosure.

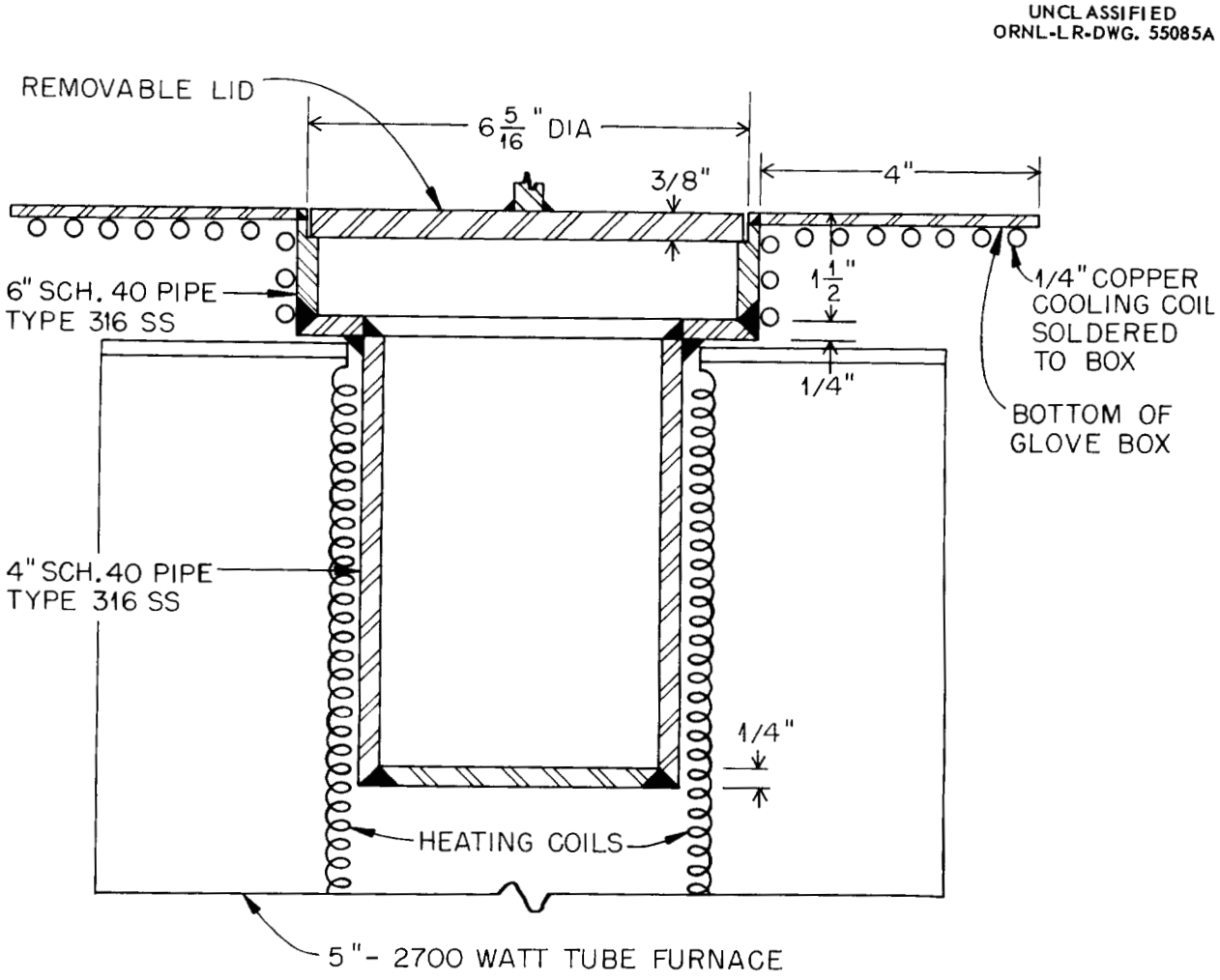

Figure 8. Heating compartment extension of an ORNL stainless steel glove box.

UNCLASSIFIED
PHOTO 34101

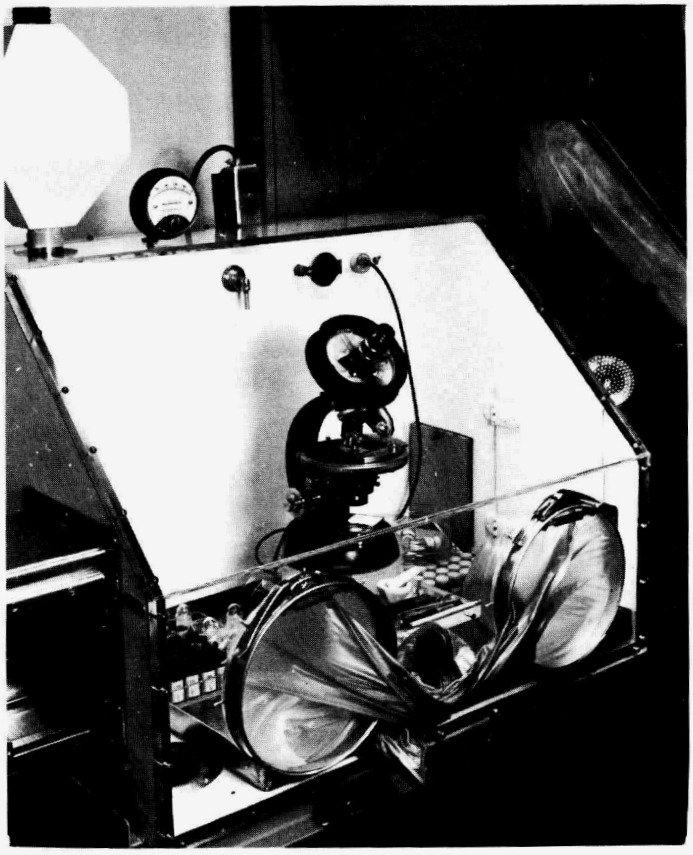

Figure 9. Glove Box for Examination of α-Active Material with a Zeiss Polarizing Microscope.

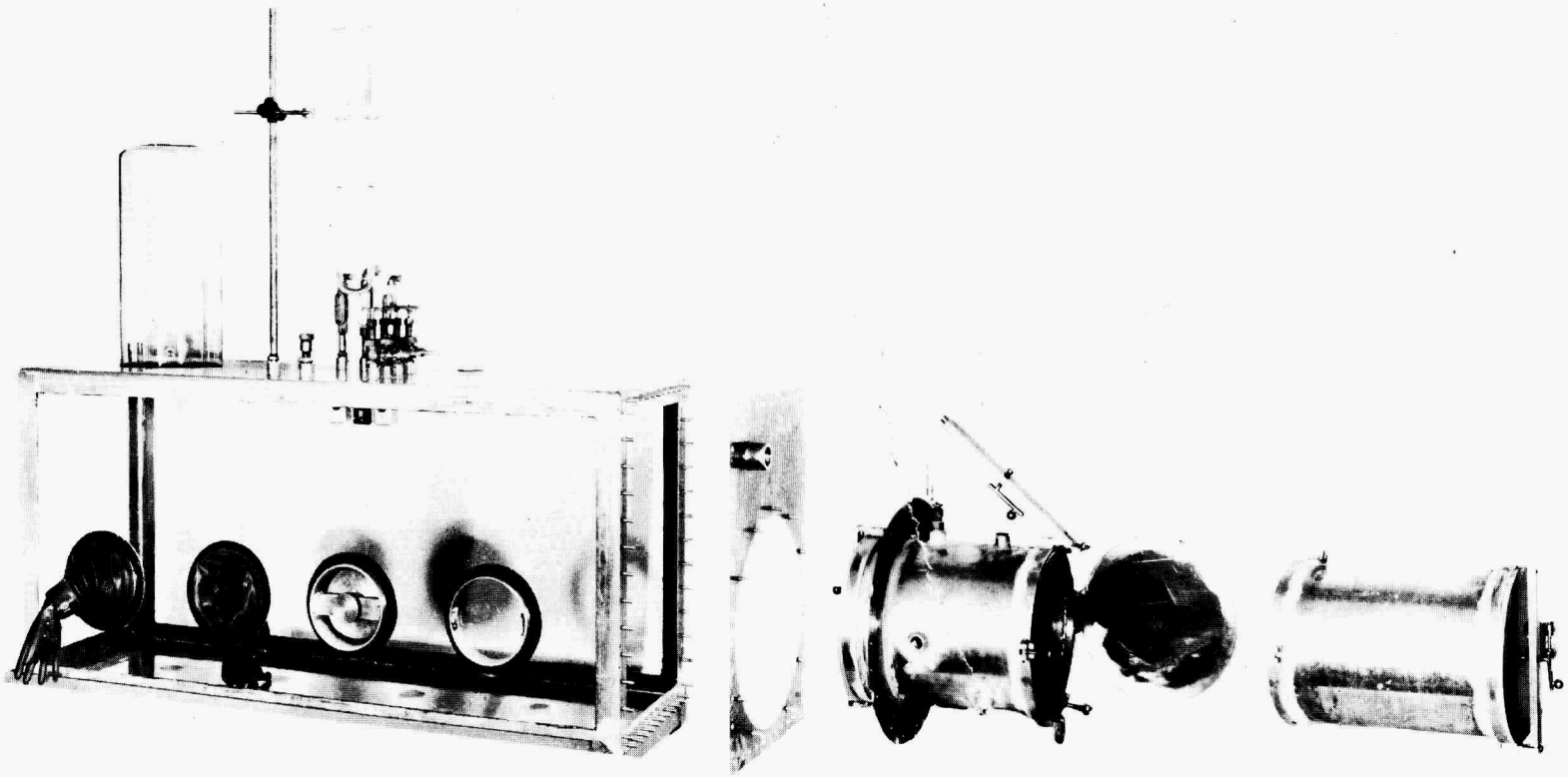

Figure 10. Controlled atmosphere glove box developed at the National Bureau of Standards.

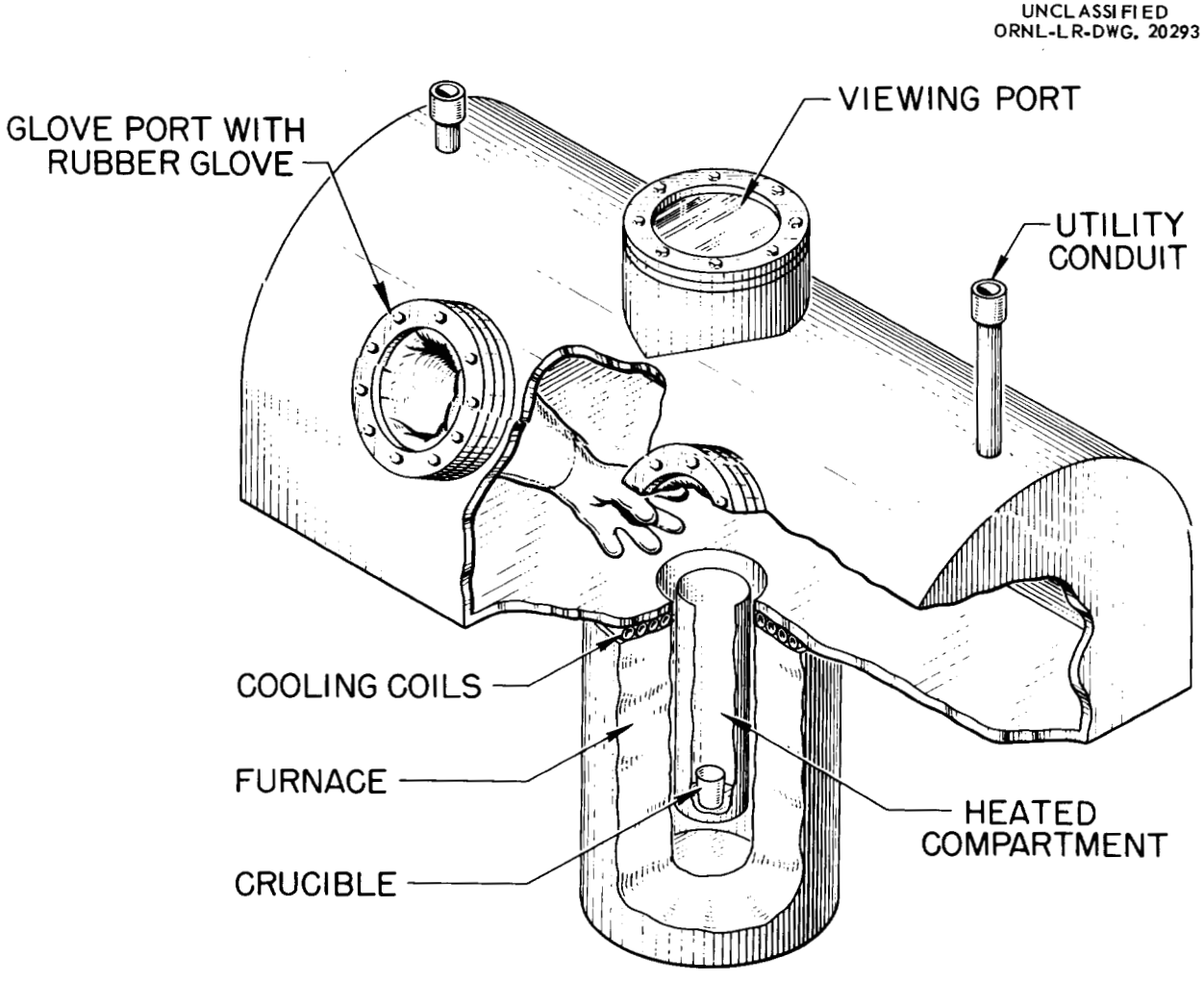

Figure 11. Small stainless steel controlled atmosphere enclosure equipped with heating chamber extension.

ORNL-3070
UC-4 — Chemistry
TID-4500 (16th ed.)

INTERNAL DISTRIBUTION

1. Biology Library
2. Health Physics Library
3-4. Central Research Library
5. Reactor Division Library
6. ORNL - Y-12 Technical Library
Document Reference Section
7-26. Laboratory Records Department
27. Laboratory Records, ORNL, R.C.
28-37. C. J. Barton
38. E. G. Bohlmann
39. W. E. Browning
40. T. J. Burnett
41. F. N. Case
42. C. E. Center
43. R. A. Charpie
44. R. S. Cockreham
45. Esther Cohn
46. J. H. Cooper
47. L. T. Corbin
48. F. L. Culler
49. D. R. Cuneo
50. W. R. Grimes
51. E. D. Gupton
52. H. L. Hemphill
53. A. Hollaender
54. A. S. Householder
55. L. N. Howell
56. T. W. Hungerford
57. R. G. Jordan (Y-12)
58. W. H. Jordan
59. J. E. Keeton
60. G. W. Keilholtz
61. C. P. Keim
62. O. L. Keller
63. M. T. Kelley
64. L. R. Kelman
65. J. A. Lane
66. R. E. Leuze
67. T. A. Lincoln
68. S. C. Lind
69. R. S. Livingston
70. L. O. Love
71. H. F. McDuffie
72. C. E. Miller
73. K. Z. Morgan
74. J. P. Murray (K-25)
75. M. L. Nelson
76. G. W. Parker
77. D. Phillips
78. P. M. Reyling
79. H. E. Seagren
80. F. M. Scheitlin
81. R. P. Shields
82. E. D. Shipley
83. J. H. Simms (Y-12)
84. M. J. Skinner
85. A. H. Snell
86. J. E. Strain
87. J. A. Swartout
88. E. H. Taylor
89. G. M. Watson
90. A. M. Weinberg
91. C. E. Winters
92. J. W. Youngblood
93. F. T. Gucker (consultant)
94. F. Daniels (consultant)
95. F. T. Miles (consultant)

EXTERNAL DISTRIBUTION

96. Division of Research and Development, AEC, ORO
97-99. AEC, Washington (1 copy each to Christian Beck, F. L. Brannigan, and S. D. Chittenden)
100-105. Argonne National Laboratory (1 copy each to J. Hughes, R. F. Malecha, A. B. Shuck, M. J. Steindler, D. C. Stewart, C. H. Youngquist)
106-108. Los Alamos Scientific Laboratory (1 copy each to J. A. Leary, W. J. Maraman, and C. F. Metz)
109-110. Mound Laboratory (1 copy each to L. J. Wittenberg and L. V. Jones)
111. Boeing Aircraft Co., Wichita, Kansas (B. H. Clampitt)
112. National Bureau of Standards, Washington (J. M. Sherfey)
113-629. Given distribution as shown in TID-4500 (16th ed.) under Chemistry category