MARTIN MARIETTA ENERGY SYSTEMS LIBRARIES
3 4456 0361401 5

CENTRAL RESEARCH LIBRARY
DOCUMENT COLLECTION

ORNL-2770
UC-4 - Chemistry

PRODUCTION OF URANIUM METAL FROM UF_6 BY DIRECT REDUCTION WITH LITHIUM OR SODIUM AMALGAM

O. C. Dean

CENTRAL RESEARCH LIBRARY
DOCUMENT COLLECTION
LIBRARY LOAN COPY
DO NOT TRANSFER TO ANOTHER PERSON
you wish someone else to see this
cument, send in name with document
the library will arrange a loan.

OAK RIDGE NATIONAL LABORATORY
operated by
UNION CARBIDE CORPORATION
for the
U.S. ATOMIC ENERGY COMMISSION

Printed in USA. Price $0.50. Available from the

Office of Technical Services
Department of Commerce
Washington 25, D.C.

LEGAL NOTICE

This report was prepared as an account of Government sponsored work. Neither the United States, nor the Commission, nor any person acting on behalf of the Commission:

A. Makes any warranty or representation, expressed or implied, with respect to the accuracy, completeness, or usefulness of the information contained in this report, or that the use of any information, apparatus, method, or process disclosed in this report may not infringe privately owned rights; or

B. Assumes any liabilities with respect to the use of, or for damages resulting from the use of any information, apparatus, method, or process disclosed in this report.

As used in the above, "person acting on behalf of the Commission" includes any employee or contractor of the Commission, or employee of such contractor, to the extent that such employee or contractor of the Commission, or employee of such contractor prepares, disseminates, or provides access to, any information pursuant to his employment or contract with the Commission, or his employment with such contractor.

ORNL-2770

Contract No. W-7405-eng-26

CHEMICAL TECHNOLOGY DIVISION

PRODUCTION OF URANIUM METAL FROM UF_6 BY DIRECT REDUCTION WITH LITHIUM OR SODIUM AMALGAM

O. C. Dean

DATE ISSUED

APR 18 1961

OAK RIDGE NATIONAL LABORATORY
Oak Ridge, Tennessee
operated by
UNION CARBIDE CORPORATION
for the
U.S. ATOMIC ENERGY COMMISSION

MARTIN MARIETTA ENERGY SYSTEMS LIBRARIES

3 4456 0361401 5

ABSTRACT

On a 3-16 g of uranium per batch scale, at 25 to 50°C, 86% of the UF_6 vapor carried in argon was reduced to UHg_4 by lithium amalgams containing 133 to 150% of the stoichiometric lithium requirement. The UHg_4 was decomposed in a vacuum retort to mercury and massive uranium metal. Two tentative flowsheets for continuous production of uranium metal by lithium amalgam reduction were proposed and demonstrated on a 10-g of uranium scale.

In the sodium amalgam reduction of UF_6, the maximum conversion to UHg_4 was 40%.

The uranium amalgam produced in one run from the reduction of UF_6 by lithium amalgam was processed through all stages to recover 13 g of massive metal, representing 81% of the uranium in the original UF_6. With the exception of mercury, the concentration of all impurities attributable to the method was lower than for electrolytic-grade metal.

CONTENTS

		Page
1.0	Introduction	4
2.0	Process Description	4
3.0	Reduction of UF_6 with Alkali Amalgams	8
3.1	Reduction of UF_6 to UHg_4 by Lithium Amalgam	8
3.2	Reduction of UF_6 to UHg_4 by Sodium Amalgam	10
3.3	Reduction of UF_4 to Sodium Amalgam	13
3.4	Separation of Reduction by-products from Uranium Quasi Amalgam	13
3.5	Recovery of Uranium from Quasi Amalgam	16
3.6	Recovery and Recycle of Unreduced Uranium, Spent Lithium, and Mercury	16
3.7	Preparation of 2.3 M Lithium Amalgam Feed	20
3.8	Recycle of Spent Lithium	20
4.0	Apparatus and Procedure for Study of the Reduction Step	21
4.1	Apparatus	21
4.2	Run Procedure	23
5.0	References	23

1.0 INTRODUCTION

The study reported here was undertaken to determine the feasibility of developing a process for producing uranium metal from UF_6 by reduction of UF_6 with sodium or lithium amalgam. In the present method, UF_6 is reduced to UF_4 in an efficient, continuous process by hydrogen. The UF_4 product is batch-reduced to metal by either calcium or magnesium in a magnesia-lined steel bomb. While the magnesium reduction of large quantities of unenriched UF_4 is reasonably efficient and low-cost, reduction of small batches of enriched UF_4 is relatively inefficient and costly. The major items in the cost are the price of calcium, the difficulty of separating small amounts of uranium from large amounts of insoluble CaF_2 or MgF_2 slags, made more acute by the $>99.9\%$ recovery requirement, and the increased solids handling imposed by small batch reduction. In the amalgam reduction process, costs can be lowered by substituting low-cost alkali amalgams for calcium or magnesium as reducing agents, by substituting for CaF_2 a water-soluble alkali fluoride slag from which recycled uranium can be easily recovered, by replacing a batch by a single-step continuous process which could be scaled to a small or a large operation, and by decreasing corrosion through operation at low temperature (25°C) in cases where corrosive materials (fluorides) are in contact with stainless steel.

The feasibility of the one-step sodium or lithium amalgam reduction of UF_6 to metal was established on a laboratory scale, involving 1 to 100 g of uranium. Uranium hexafluoride was reduced to uranium amalgam; uranium metal was recovered from the amalgam; unreduced uranium was recovered from the by-product alkali fluorides; and mercury was recovered and recycled through the electrolytic cell. Optimum conditions for the reduction were established and tentative flowsheets were drawn.

Morrison and Blanco[1] and this author[2] studied the reduction of UF_6 by sodium amalgam on a laboratory scale. These investigations were continued and the results are summarized in this report.

In a previous study[3] the feasibility of recovering uranium from uranium amalgams was demonstrated. In the present investigation, the uranium in an amalgam produced in a single reduction run was recovered as massive metal and evaluated.

Acknowledgments are made to C. T. Thompson and E. R. Johns, who performed the laboratory work, and to G. R. Wilson and W. R. Laing and their staffs of the Analytical Chemistry Division who performed the analytical work which made this study possible.

2.0 PROCESS DESCRIPTION

In the concentrated lithium amalgam process for reduction of UF_6 to metal (Fig. 2.1), a slurry of 2-3 moles of lithium mercuride per liter of mercury is mixed with UF_6 vapor carried in a stream of argon at 25°C under

UNCLASSIFIED
ORNL-LR-DWG 51875

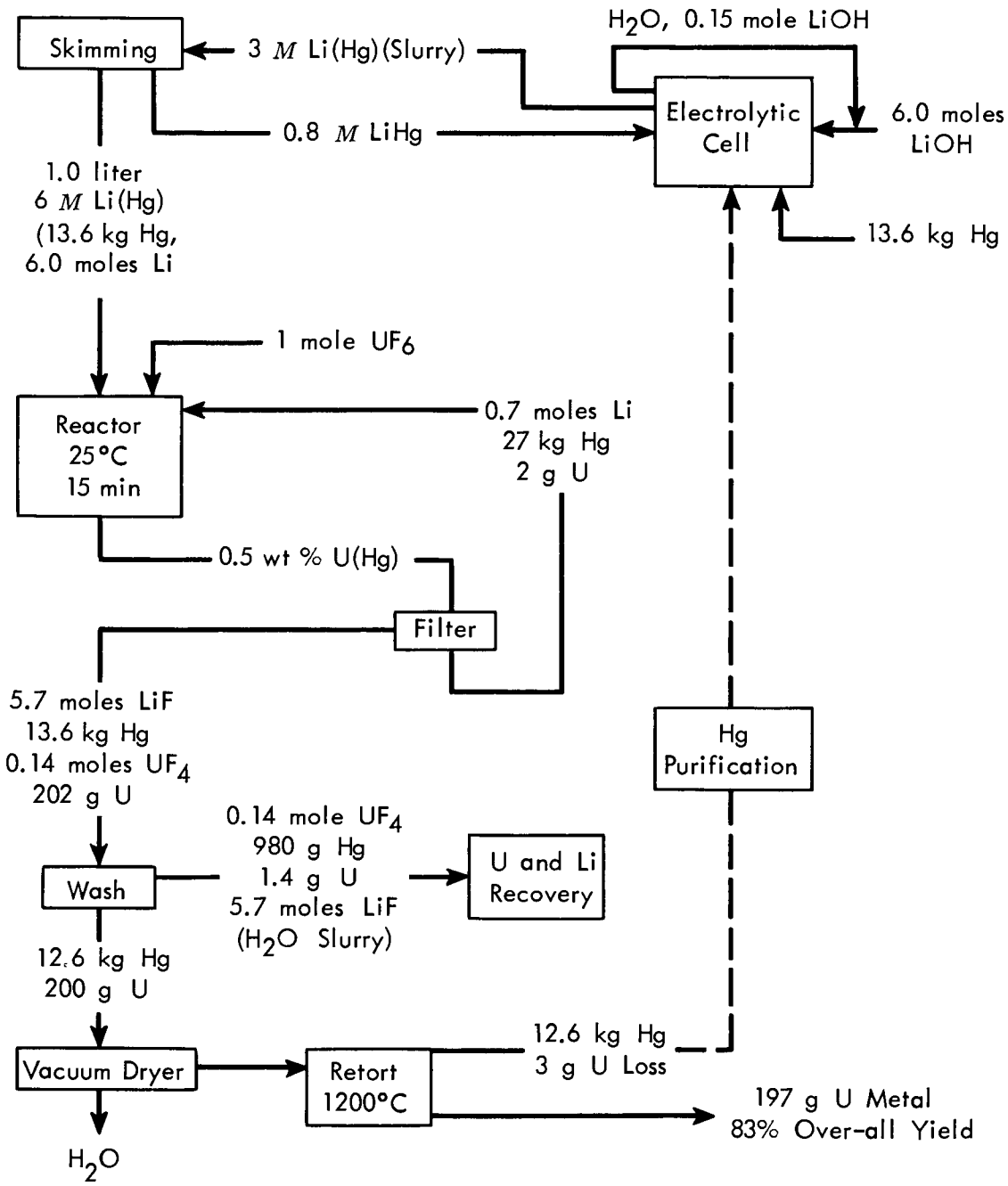

Fig. 2.1. Reduction of UF_6 to uranium metal by lithium amalgam. Basis: 1 mole of uranium. Reducing agent: concentrated lithium amalgam.

the high-shear conditions of a Rushton or Abbé Dispersall turbomixer. The primary reduction reaction is

$$UF_6 + 6LiHg_3 \longrightarrow UHg_4 + 6LiF + 14Hg$$

Approximately 86% of the UF_6 is converted to UHg_4, which is wetted by the excess mercury, and the balance to UF_4 which is not wetted by mercury. The reactor is cooled to dissipate heat of reaction and mixing. The product amalgam is a slurry containing ~0.5% uranium as UHg_4, unreduced UF_4, and by-product LiF in ~0.7 M lithium amalgam. Vacuum filtration retains the UHg_4, UF_4, LiF, and some excess mercury while passing spent (~0.7 M) lithium amalgam along with 50-100 ppm uranium. The UF_4 and LiF are aqueously washed from the quasi amalgam residue and recovered (Sect. 3.5). The spent amalgam filtrate, enriched up to ~2 M lithium with 6 M Li(Hg) concentrate from the electrolytic cell, is returned to the reductor.

In a second method (Fig. 2.2), the UF_6 is reduced with dilute lithium amalgam under conditions otherwise like those of the first. The yield of UHg_4 is approximately the same, but the product amalgam contains only ~0.15% uranium and only 0.03 to 0.1 M lithium. The entire uranium amalgam product is washed free from the by-products with deionized water prior to filtration. The uranium in the washed amalgam is concentrated to ~3 wt % by filtration to produce a quasi amalgam from which uranium metal is recovered.

This alternative method was designed to use spent lithium amalgams from another process, where it may be economical to eliminate lithium recovery. One disadvantage is that even as little as 1 ppm of residual uranium in the mercury cathode prevents the electrolytic reduction of LiOH to $LiHg_3$. A mercury distillation step would be necessary before mercury from this process could be cycled to an amalgamaker. In the concentrated lithium amalgam process, only distilled mercury from the retort is returned to the amalgam production cell.

For both processes the washed uranium quasi amalgam phase, which makes up 33% of the mercury stream and contains 2-3 wt % reduced uranium as UHg_4, carries more than 99% of the reduced uranium. It is vacuum-dried or decanted from amalgamated phase separators to remove washing reagents and residual impurities.

Mercury is removed by distillation under 0.5 atm of argon in the upper section of a combined retort and melting furnace at 400°C to produce uranium sponge. As the charge moves vertically down the furnace to a crucible, the sponge melts at 1150-1200°C, and may be tapped off as molten uranium metal.

The aqueous slurry from the amalgam washing step for both processes contains soluble LiOH from the decomposition of unreacted lithium amalgam, and, per liter, ~1.2 g of soluble LiF, ~2 g of insoluble UF_4, ~7 g of insoluble LiF, and 50 g of insoluble particulate mercury. The pH of the slurry is adjusted to 8, and the solids are separated by centrifugation.

UNCLASSIFIED
ORNL-LR-DWG 51876

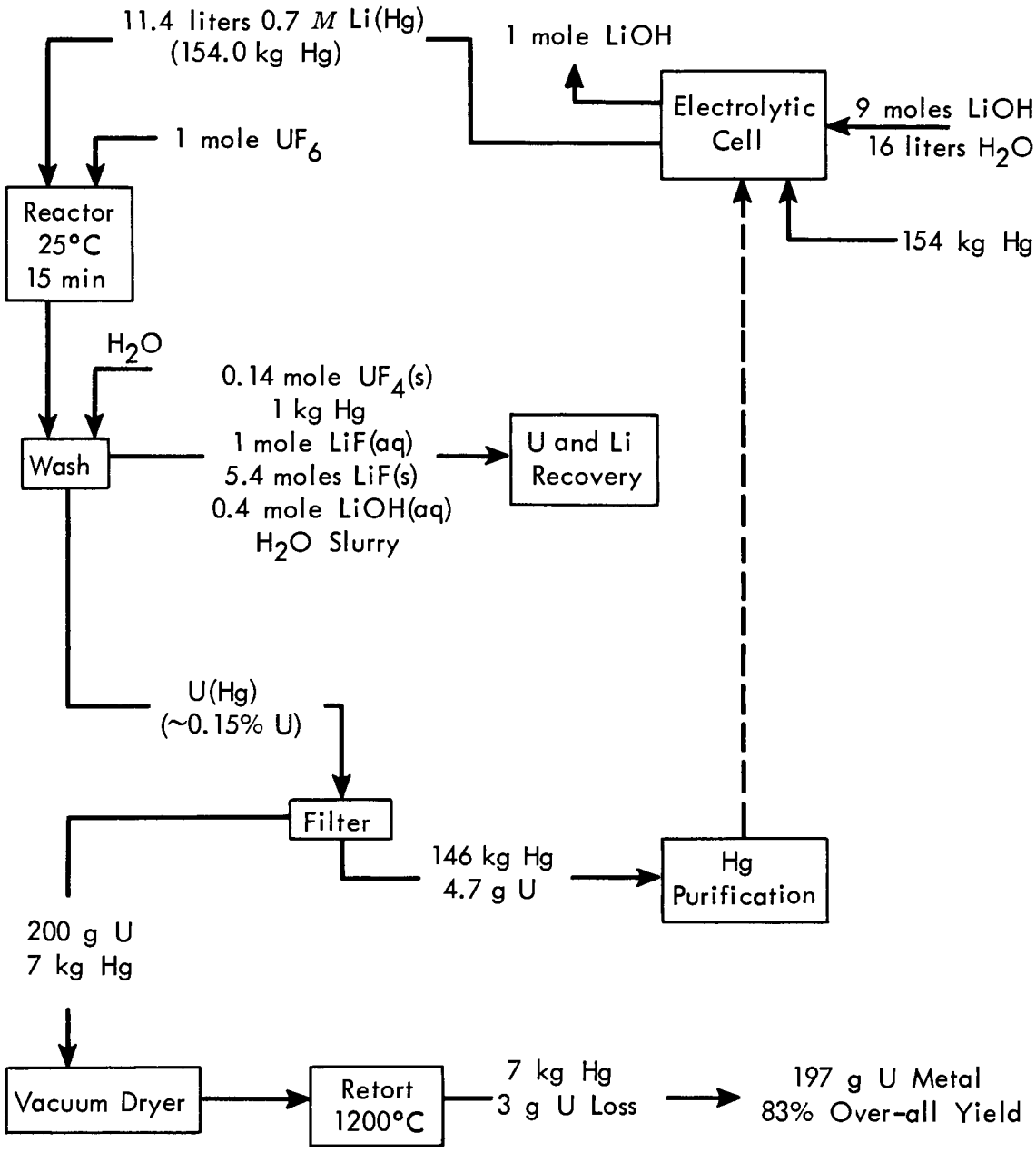

Fig. 2.2. Reduction of UF_6 to metal by lithium amalgam. Basis: 1 mole of uranium. Reducing agent: dilute lithium amalgam.

Water and mercury are removed from the solids by calcination at 360°C, and UF_4 is reconverted to UF_6 by fluorination. The residual LiF and that in the supernatant from centrifugation are converted to soluble LiOH and insoluble CaF_2 by lime treatment. The LiOH solution is separated by sedimentation, evaporated to 2 M, and returned to the electrolytic cell. Since lithium as lithium fluoride is very expensive, ~$4 per pound of lithium, recovery is desirable.

In the electrolytic cell, 2 M LiOH is electrolyzed over a mercury cathode to produce 3 M lithium amalgam slurry. The limit of solubility of lithium in mercury at 25°C is only 0.83 M, but continuation of the electrolysis at a slightly elevated voltage produces crystals of $LiHg_3$ which separate from the amalgam. By raising the temperature of 3 M lithium amalgam to 100°C, the $LiHg_3$ sludge can be dissolved and the amalgam dried. By an alternative method the amalgam can be dried at room temperature with anhydrous methanol. The solution is separated from the resulting small amount of oxide slag by bottom decantation and allowed to cool. The separated crystals are skimmed as a 6 M sludge and added to the spent amalgam to enrich it before the reduction reactor is recharged. The liquid bottoms are returned to the electrolytic cell. This procedure makes it possible to maintain only clean mercury in the lithium amalgam cell, since all recycle mercury has been distilled. The cost of the reducing agent is therefore the cost of operation of the electrolytic cell plus the cost of mercury inventory and replacement and the cost of lime precipitation and LiOH makeup.

3.0 REDUCTION OF UF_6 WITH ALKALI AMALGAMS

Experimental work was performed to determine the feasibility of the desired reductions

$$UF_6 + 6LiHg_3 \longrightarrow UHg_4 + 6LiF + 14Hg$$

and

$$UF_6 + 6NaHg_4 \longrightarrow UHg_4 + 6NaF + 20\ Hg$$

and the optimum conditions for their completion. A limited amount of work was done on the recovery of lithium, uranium, and mercury from the amalgam wash stream. Massive uranium was recovered from washed and filtered uranium amalgam produced in a single reduction run. Mercury was removed by vacuum distillation, and the resulting uranium sponge was melted to a button.

3.1 Reduction of UF_6 to UHg_4 by Lithium Amalgam

The highest conversions of UF_6 to UHg_4 were 85 to 87% when Li/U mole ratios were >8 (i.e., the lithium amount was >133% of the stoichiometric requirement for complete reduction) the temperature was 25 to 50°C, and UF_6 was agitated with lithium amalgam at a high rate of shear for 12.5 to 30 min (Table 3.1). The reason for less than 100% reduction to metal is not known with certainty, but may be due to locally ineffective mixing of UF_6 and lithium or to the slow kinetics of reduction of UF_4 by lithium.

Table 3.1 Reduction of UF_6 with Lithium Amalgam

UF_6 fed to reactor in a stream of inert gas

Run No.	Amalgam Li Conc, M	Amalgam Vol, ml	Amalgam Li/U Mole Ratio[b]	U in UF_6 Feed, g	Temp, °C	Reactor Type	Agitation Rate, rpm	Residence Time, min	Reduction, % To UF_4	Reduction, % To UHG_4
1	1.4	265	13.3	4.93	200	Turbomixer	1100	30	29.1	68
2	2.0	232	11.5	9.6	100	Turbomixer	1100	30	21.4	78.0
3	2.33	260	9.0	16.1	25-50	Turbomixer	1100	30	13.5	86.5
4	1.35	280	16.5	4.74	25-50	Turbomixer	1100	30	17.7	82.2
5	1.4	245	4.4	18.9	-16-0	Turbomixer	1100	30	90.0	9.6
6	0.78	247	8.1	5.65	25-50	Turbomixer	1100	12.5	14.5	84.5
7	1.74	168	12.3	5.47	25-50	Turbomixer	1200	22.5	16.8	83.2
8	1.14	240	20.0	3.25	25-50	Turbomixer	1100	12.5	15.0	83.2
9	1.11	194	5.7	9.15	100	Turbomixer	1100	81	18.6	76.5
10	1.7	275	11.0	10.13	25-50	Gas-sparged		30	32.1	55.2
11	0.80	292	11.4	4.87	25-50	Spray		15	12.6	11.0
12	0.81	166	13.5	2.37	25-50	Spray + agitator		3.6	9.6	39.4
13[a]	1.13	240	24.0	2.72	25-50	Turbomixer	1100	30	39.1	53.0

[a] 7 moles of NaF per mole of uranium added.

[b] The percentage of stoichiometric lithium requirement may be obtained by dividing the mole ratio by 6 and multiplying by 100.

Temperatures below 100°C, at least 30% excess lithium, and efficient mixing of the UF_6 vapor with the lithium amalgam and a residence time between 12 and 30 min appeared to be the optimum conditions for high reduction yields.

In runs 11 and 12 (Table 3.1), an attempt was made to increase metal reduction yields by contacting the UF_6-argon vapor stream with a single-pass spray of lithium amalgam. It was thought that this method of contacting would furnish high excesses of lithium to all UF_6 entering the reactor, thus minimizing the tendency of local excesses of UF_6 to reoxidize the UHg_4 to UF_4. Contrary to expectation, this method proved to be markedly less efficient than turbomixer agitation, and resulted in a decrease in percentage of uranium converted to metal, an increase in UF_4 production, and a marked increase in the amount of UF_6 passed through the reactor unreduced.

In run 13, the metal yield was shown to be decreased by the presence of NaF. The run was conducted under otherwise optimum conditions.

3.2 Reduction of UF_6 to UHg_4 by Sodium Amalgam

The use of sodium amalgam as a reducing agent would be advantageous because of low cost. Earlier studies by Morrison and Blanco[1] had shown reduction of UF_6 to uranium metal by sodium amalgam to be feasible. The study was continued as a part of this investigation. In runs where the sum of the percentages of UF_6 reduced to UF_4 and UHg_4 were less than 100 (Table 3.2), it was assumed that UF_6 had passed unreduced through the reactor.

The conditions that produced the highest yield of UHg_4 were: reactor temperature, 100°C; 6.0 M sodium in the amalgam; Na/U ratio of 12; and high shear agitation (run 6, Table 3.2). All runs conducted at temperatures below 100°C gave comparatively high yields of UHg_4 (runs 6-11). High-shear agitation of a flat-bladed turboagitator rotating at 1600 rpm was less effective for high-reduction yield at 25°C than gas sparging the feed (UF_6 + argon) through the amalgam (runs 10 and 11; 1 and 2; 4 and 5). The cause was thought to be an increase in the rate of oxidation of UHg_4 by UF_6 induced by improvement of contact between these reactants with increased shear.

Considerable experimental evidence indicated that the presence of sodium fluoride, a by-product of sodium reduction of UF_6, strongly inhibited reduction of UF_6 to uranium metal. In run 10 (Table 3.2) the UF_6 feed was added to the amalgam as a solid UF_6-NaF complex, and the slight decomposition of the complex at 300°C was depended on to furnish UF_6 to the amalgam at a slow and uniform rate. The low metal yield (1.6%) indicated that the high concentration of sodium fluoride inhibited the metal reduction reaction. In another experiment (run 13, Table 3.1), the addition of sodium fluoride to lithium amalgam decreased the UHg_4 yield to about 65% of that expected for other conditions of the run.

The probable reactions in the system UF_6-argon-sodium amalgam are

$$UF_6 + 6NaHg_4 \rightarrow UHg_4 + 6NaF + 20Hg \quad (a)$$

$$UF_6 + 2NaHg_4 \rightarrow UF_4 \cdot 2NaF + 8Hg \quad (b)$$

$$UF_6 + 3NaF \rightleftharpoons UF_6 \cdot 3NaF \quad (c)$$

$$UF_6 \cdot 3NaF + 2NaHg_4 \rightarrow UF_4 \cdot 3NaF + 2NaF + 8Hg \quad (d)$$

$$UHg_4 + 2UF_6 + 6NaF \rightarrow 3(UF_4 \cdot 2NaF) + 4Hg \quad (e)$$

Reaction a is the desired reaction, and b, d, and e are parasitic. All are feasible from the standpoint of free energy of reaction at 25 to 360°C. Complete reversal of reaction c is favored above 360°C, and ~50% reversal at 300°C. In run 1 of the sodium reduction runs (Table 3.2) the solid products of reaction were isolated and examined by x-ray diffraction and found to be NaF, $UF_4 \cdot 2NaF$ and $UF_4 \cdot 3NaF$. Although the free energies of formation of the $UF_4 \cdot NaF$ complexes (eqs. b, d, and e) are not known, they must be considerably negative in the 25 to 356°C range, since UF_4 alone was never isolated in the products. The stability of these compounds was thought to be the most important reason for the low metal yields and the depressing effect of added NaF on metal yields.

Parasitic reaction e, which represents the attack of UF_6 on UHg_4, could be minimized by having an excess of sodium at all points of contact between UF_6 and amalgam at all times. To achieve this condition, two experiments were performed. In one, UF_6 was dissolved in C_7F_{16} to the extent of ~160 mg/ml (~20 mole %)[2] and mixed with 3.8 M sodium amalgam initially at 25°C. The mixture reacted with considerable evolution of heat and congealed to a semi-solid mass in 1 min. When the amalgam was washed and separated more solids were found than could be accounted for by the UF_4-NaF complex produced. Only 8.6% of the uranium was reduced to metal and the remainder to a UF_4-NaF complex. The procedure was repeated under the same conditions except that the amalgam was chilled to -20°C during mixing in order to distribute UF_6 uniformly, surrounding each particle with an excess of sodium before much reaction could take place. After 5 min mixing the mixture was brought to 83°C to distill off the fluorocarbon, further heated for 1 hr at the boiling point of mercury to dissolve any uranium produced, and vacuum-filtered. Again, much carbon-containing solid material was formed. The recovery of liquid fluorocarbon was only 73%. The character of the fluorocarbon was shown by gas chromatography to be entirely changed at a temperature between -20 and 83°C. A metal yield of less than 1% was realized; the rest of the uranium had been reduced to U(IV). A contact between 3.8 M sodium amalgam and the C_7F_{16} used in the previous experiments, but containing no uranium at room temperature, produced carbon-containing solids which also contained sodium fluoride, but no sodium chloride, and the sodium concentration of the amalgam used was decreased 25%. This indicated an attack of sodium amalgam on the fluorocarbon, and showed that the fluorocarbon contained no chlorine residue that might have accounted for this degradation. The

Table 3.2 Reduction of UF_6 with Sodium Amalgam

UF_6 fed to reactor in a stream of inert gas

UF_6-amalgam contact time: 2-3 hr

Run No.	Amalgam Na Conc, M	Amalgam Vol, ml	Amalgam Na/U Mole Ratio	U in UF_6 Feed, g	Temp, °C	Reactor Type	Agitation Rate, rpm	Reduction, % To UF_4	Reduction, % To UHg_4
1	3.5	262	6.2	35.3	356	Gas-sparged		75	19.6
2	3.4	400	8.1	39.9	300	Turbomixer	1600	90	0
3	2.4	220	62.6	3.2	200	Gas-sparged		65.6	19.0
4	3.7	375	5.2	93.5	130	Turbomixer	1600	70.0	11.0
5	5.3	480	12.2	56.2	100	Turbomixer	1600	52.0	40.0
6	6.0	140	6.0	15.5	100	Turbomixer	1160	67.8	32.1
7	2.8	278	9.0	20.6	85	Turbomixer	1600	62.0	34.0
8	2.8	217	7.6	25.6	25	Turbomixer	1500	69.6	30.3
9	5.4	173	4.8	32.8	25	Gas-sparged		49.0	35.8
10[a]	3.8	202	3.3	34.1	300	Turbomixer	1160	79.0	1.6
11	3.8	490	6.4	100.2	80	Turbomixer	1600	64.0	26.0

[a] UF_6 fed as solid UF_6-NaF complex.

attack of the amalgam on the fluorocarbon was thought to be an important reason for low metal yields in these experiments.

In another attempt to surround UF_6 with excess sodium amalgam before much reaction could occur, a UF_6-argon mixture was fed to 3.8 M sodium amalgam at -20°C while agitating. Considerable UF_6 passed through the reactor and into the off-gas trap during the mixing, showing that the reduction, even to U(IV), is very slow at this temperature. At the end of the mixing period (1 hr), the UF_6 feed was discontinued but the argon was continued while the amalgam was heated quickly to boiling and kept there for 1 hr to dissolve any uranium metal formed. The metal yield was only 5.8%. Eighty-seven percent of the uranium retained in the reactor was reduced to UF_4. None of the attempts to surround UF_6 with excess sodium gave any improvement in metal yields.

The results of these attempts to minimize reaction of UHg_4 with UF_6 indicated that it was unimportant as a parasitic reaction by comparison with reactions b and d in which stable sodium fluoride complexes of UF_4 were formed.

3.3 Reduction of UF_4 by Sodium Amalgam

The reaction $UF_4 + 4NaHg_4 \rightarrow UHg_4 + 4NaF + 12Hg$ is thermodynamically feasible. In three runs (Table 3.3) UF_4 prepared by dry hydrofluorination of UO_2 at a final temperature of 600°C and also by the Excer process at 95°C was contacted with sodium amalgam, but with no metal being formed. A fourth run, in which the UF_4 was dehydrated in vacuum by 2,2-dimethoxypropane at 25°C prior to reduction, gave a metal yield of 8%. A low temperature in the preparation of UF_4 appeared to be the most important factor in increasing its reactivity with sodium amalgam, but the total surface area appeared to be unimportant at 100°C.

Qualitative evidence from other reduction runs supports the belief that the rate of reaction of UF_4 with sodium and lithium amalgams at 0 to 360°C is extremely slow. If the mechanism of reduction of UF_6 by sodium amalgam is $U(VI) \longrightarrow U(IV) \longrightarrow U$, the effect of temperature on reactivity of UF_4 might explain the higher metal yields obtained at lower temperatures.

3.4 Separation of Reduction By-products from Uranium Quasi Amalgam

The product of reduction of UF_6 by lithium amalgam is a free-flowing slurry of UHg_4, LiF, and UF_4 in spent lithium amalgam (0.05 to 0.7 M lithium). The density of thickened, ~3%, uranium quasi amalgam is 16.0 to 17.0 g/cm^3, while that of the bulk of the amalgam is ~13.4 g/cm^3. The density of the LiF-UF_4 mixture is ~2 g/cm^3, but occluded mercury increases this to 4-5. Four techniques for separation were studied.

Filtration and Washing. In filtration of the dry product amalgam through an "E" porosity stainless steel filter, fluorides and UHg_4 were retained and the lithium amalgam passed through. This was the most

Table 3.3 Reduction of UF_4 with Sodium Amalgam

3.8 M Na(Hg); UF_4 agitated at 1100 rpm at 100°C for 3 hr with sodium amalgam in turbomixer with Rushton-type agitator

Source of UF_4	Pretreatment	H_2O Content of UF_4, %	Surface Area of UF_4, m^2/g	Conversion to UHg_4, %
Regular production, hydrofluorination of UO_2 at 600°C	None	---	---	0
Excer process, 95°C	None	3.5	2.1	0
	Vacuum dehydrated at 100°C	2.0	1.1	0
	Vacuum-dried, at room temperature after treatment with 2,2-dimethoxy-propane	0.95	0.36	8

Table 3.4 Recovery of UHg_4 from Product Amalgam by Filtration

UF_6 reduced at 25°C to UHg_4 by 3 M Li(Hg)
Unwashed amalgam filtered through an "E" porosity stainless steel filter of 12 μ average effective pore size

Filtration No.	Concentration Factor, Total Product Weight / Filter Cake Weight	Residual Li in Filtrate, M	Fluoride in Filtrate, ppm based on Hg	Recovery of UHg_4 in filter cake, %
1	4.5	1.13	95	57
2	25	0.86	45	73
3	15.4	0.85	100	100
4	7.1	1.02	-	98

satisfactory method for recovering UHg_4 from reduction product amalgams of the concentrated lithium reduction process (Fig. 2.1). In four filtration runs (Table 3.4) the UHg_4 product was concentrated in the filter cake by factors of 4.5 to 25 (average ~10); 57 to 100% of the UHg_4 produced was collected in the filter cake in a single filtration; the amalgam that passed through the filter contained 45-100 ppm of fluoride and 0.85 to 1.13 moles of residual $LiHg_3$ per liter.

A filter of smaller pores (~3 μ) is recommended to consistently recover a high percentage of UHg_4. Calculation from the concentration factors shows that immediate recycle of 80 to 90% of the mercury to the reactor is possible with no distillation step if it is butted up with Li(Hg) concentrate.

The filter cake is a thixotropic solid, which becomes liquid when agitated with water. Fluorides and unreacted lithium were removed by three or four washings, each wash using three volumes of water per volume of amalgam. The washed amalgam product was composed of mercury plus 1.5-2% uranium as UHg_4.

When the dilute lithium amalgam flowsheet (Fig. 2.2) was used, the whole amalgam product was washed before filtration because the filtered amalgam, containing little lithium, was not recycled to the reduction reactor, but to the electrolytic cell. It must be freed from fluorides and uranium before being returned to the amalgam cell because these interfere with lithium amalgam production, even when present in only a few parts per million. Filtration of the washed amalgam is like that of the dry product and produces a similar UHg_4 concentrate.

Water-washing. The method used in the earlier laboratory reduction studies consisted in washing the entire uranium amalgam product with deionized water. This procedure decomposed the residual lithium mercuride to mercury and lithium hydroxide and separated the by-product lithium fluoride from the mercury phase partly by dissolution and partly by slurrying. The UF_4, a product of incomplete reduction, was washed from the amalgam into the aqueous phase. Some UHg_4, imperfectly wetted by mercury, was decomposed to mercury and UO_2 and was also washed into the aqueous phase with four to seven washings; fluorides were so completely washed from the uranium amalgam that they could not be detected by analysis.

While this method was successful in complete separation of by-products from the amalgam, it was wasteful of lithium amalgam when used in the concentrated lithium amalgam flowsheet (Fig. 2.1). In the dilute lithium amalgam flowsheet, where the concentration of lithium in the product amalgam is very low (Fig. 2.2), washing the entire product is the recommended procedure.

Centrifugation. In three reduction runs centrifugation was tested as a means of separating by-products from product amalgam. Centrifugation at 700 G for 20 min separated the bulk product into three phases: a bottom quasi-amalgam phase containing 2-3% uranium and occupying 15% of the volume; a floating phase composed of UF_4, LiF, and about 50 wt % occluded mercury, occupying ~5% of the volume; a liquid phase consisting of spent lithium amalgam, containing in two cases 0.8 M and in one other, 0.2 M lithium, occupying the remainder of the volume.

In no centrifugation experiment was the separation of fluorides or lithium from the UHg_4 (bottom) phase or UHg_4 from the fluoride (top) phase complete. In the product where the residual lithium concentration was low (0.2 M), 85% of the UHg_4 was found in the bottom phase, ~10% in the top with the fluorides, and 5% in the middle or bulk amalgam. The bottom phase contained ~20 ppm of fluoride. For the high-lithium (0.7 M) products 61% of the UHg_4 and 4-6% of the fluoride was found in the bottom phase. In one case none of the fluoride phase floated. These results showed that centrifugation could not separate by-products from uranium amalgam completely, particularly when the lithium concentration was high.

Gravity Settling. Separation by settling was also shown to be unsatisfactory for separation of fluorides from UHg_4 when the lithium concentration in the amalgam was > 0.2 M. Both fluorides and UHg_4 tended to float, but only 31% of the UHg_4 was found in the floating phase.

3.5 Recovery of Uranium from Quasi Amalgam

The continuous removal of mercury and melting of the resulting uranium sponge has been demonstrated in the Hermex process (Fig. 3.1) on a 30-g scale.[3] Uranium quasi amalgam was introduced continuously to the top of the retort. The mercury was volatilized in the upper section where the temperature gradient from top to bottom was 200-800°C, producing a uranium sponge of about 50% of the theoretical uranium density. In the lower section the sponge was melted and consolidated to massive metal at 1225°C. The uranium quasi-amalgam product of a single reduction run, weighing 568 g and containing 16.25 g of uranium, yielded three buttons of uranium metal with a total weight of 13.5 g. The concentration of all impurities except mercury was very low (Table 3.5). It is thought that when the retort was cooled, some of the mercury from the atmosphere condensed on the surface of the uranium metal and alloyed with it.

3.6 Recovery and Recycle of Unreduced Uranium, Spent Lithium, and Mercury

In the concentrated lithium amalgam reduction process (Fig. 2.1), for each mole of uranium fed to the reduction step, 5.7 moles of LiF and 0.14 mole of UF_4 are produced. These materials are retained by filtration of the reduction product, along with 0.86 mole of UHg_4 and 13.3 kg of free mercury. The filter cake is washed with approximately 20 liters of deionized water to separate the fluorides and unreacted lithium from the mercury and UHg_4.

UNCLASSIFIED
ORNL-LR-DWG 14698 A

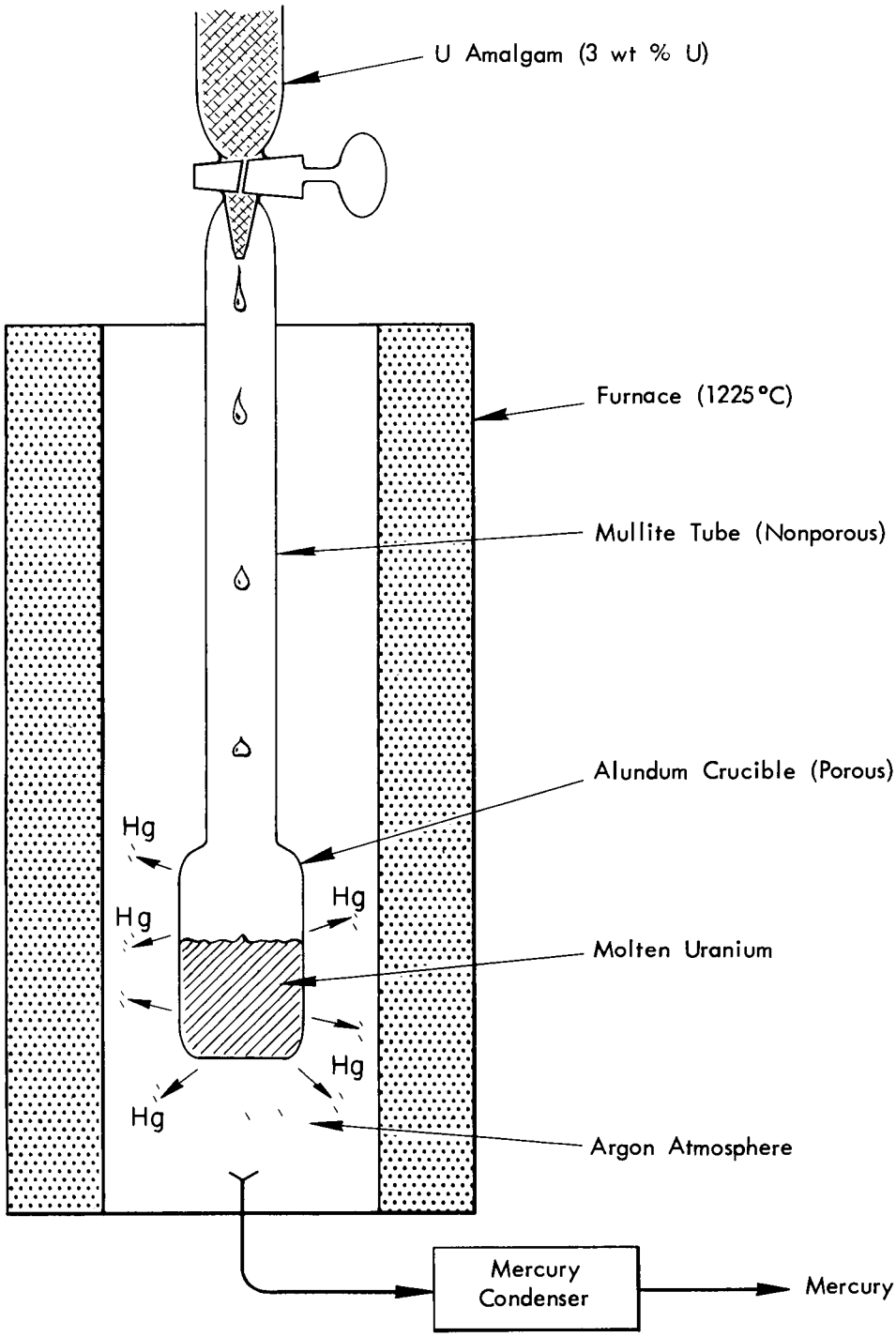

Fig. 3.1. Continuous removal of mercury from uranium quasi amalgam and consolidation of uranium to massive metal.

Table 3.5 Impurities in a Typical Uranium Product from Lithium Amalgam Reduction of UF_6

Impurity	Concentration, ppm
Lithium	10
Fluoride	20
Mercury	282
Iron	10
Oxygen	17
Hydrogen	2
Nitrogen	76

In the dilute lithium amalgam process (Fig. 2.2), the amalgam washing step is applied to the entire reactor product. The aqueous wash stream from either process is a suspension of finely divided particles containing, per liter, 2.2 g of insoluble UF_4, 1.2 g of dissolved LiF, 7 g of insoluble LiF (solubility of LiF = 1.2 g/liter), and 50 g of insoluble mercury. The uranium and mercury are recovered by centrifuging with lithium hydroxide, drying the solids, and then fluorinating or dissolving and solvent extracting. Treating the supernatant containing lithium fluoride with calcium hydroxide precipitated CaF_2 and converted LiF to soluble LiOH (Fig. 3.2).

Separation of Solids. Centrifugation produced the most rapid separation of the solids from the lithium fluoride solution, giving a settled volume of 2.5 and 5% of the initial volume in 3 min, and was the most effective means found for removing UF_4 from the slurry (Table 3.6). If complete removal of solids from the slurry is desirable, adjustment of the pH to 8 by the addition of lithium hydroxide is necessary. It appears possible, from the results of one experiment, to leave all the lithium in the supernatant by centrifugation at pH 6, but is not known whether or not this can be consistently accomplished and whether or not uranium losses to the supernatant can be reduced to less than 0.32% of that initially present in the wash slurry.

Separation of Mercury and Water from Solids. When the wet solids from the centrifugation step were heated to 360°C, more than 99.9% of the mercury and water were volatilized. The uranium loss by volatilization was $<0.1\%$. When no entrainment trap was used, 14% of the LiF was lost, but it was caught by a Corning C filter in the vapor stream.

Separation of UF_4 from LiF by Fluorination. In one experiment the solid residue from the mercury- and water-removal step were fluorinated at 500°C. The UF_6 was caught on a NaF trap. The fluorinated solids retained 0.17% of the uranium initially present, and 95.3% of the uranium initially present was accounted for in the NaF trap. The residual solid was white LiF.

UNCLASSIFIED
ORNL-LR-DWG 52335

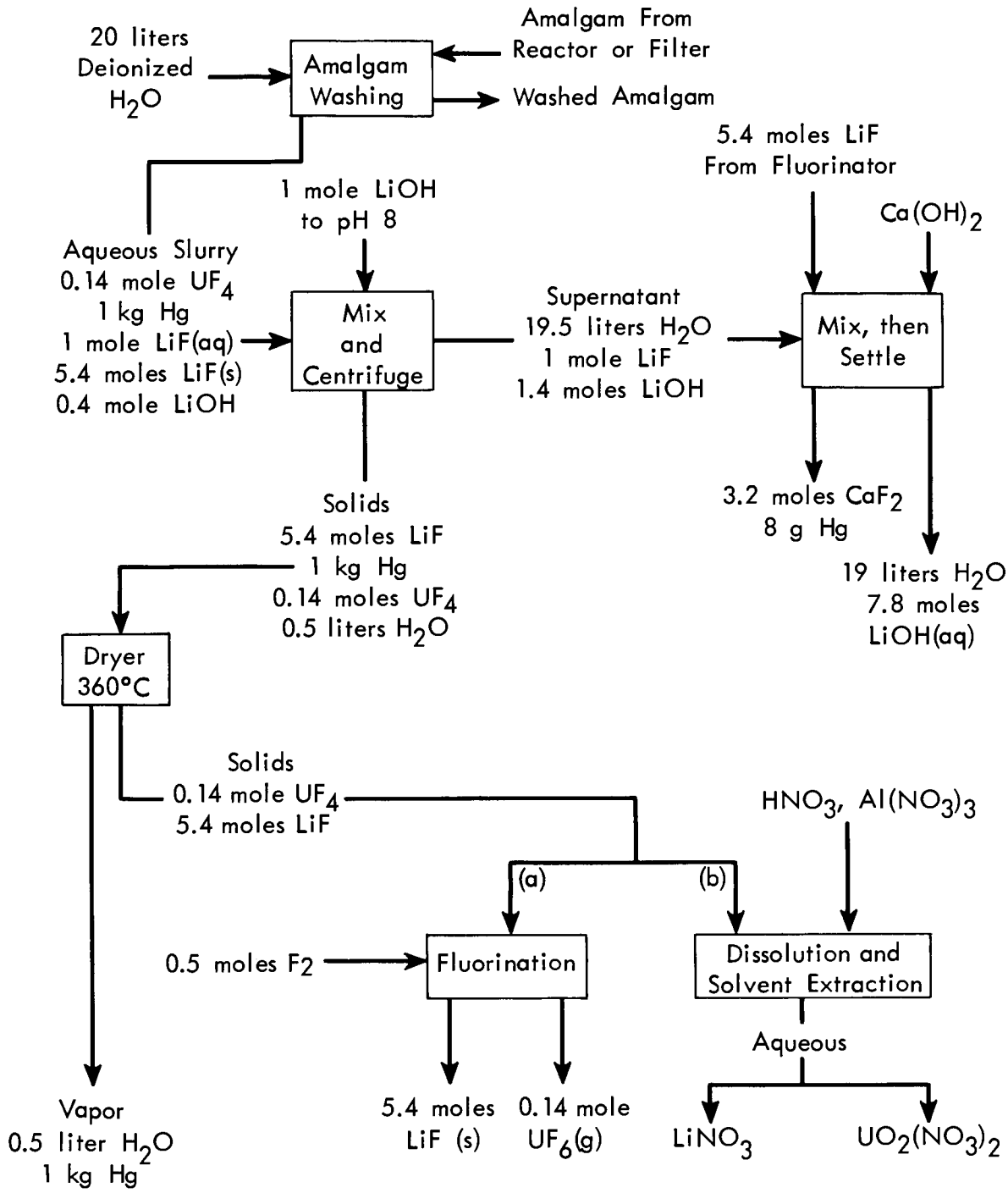

Fig. 3.2. Recovery of uranium, lithium, and mercury from amalgam wash slurries, showing alternative (a and b) lithium recovery methods.

Conversion of LiF to LiOH by $Ca(OH)_2$. This step was not demonstrated, since the precipitation of fluorides by lime is a well-known operation.

3.7 Preparation of 2.3 M Lithium Amalgam Feed

Lithium amalgam for the reduction in this study was prepared by electrolysis of aqueous 2 M LiOH over a mercury cathode. The limit of solubility of lithium in mercury at room temperature is 0.8 to 0.9 M. In order to decrease the Hg/U ratio in the reactor to a minimum value and to provide the 33% excess lithium found optimum for reduction yields, the lithium concentration in the amalgam should be at least 2.3 M. Slurries of 3 to 4 moles of lithium per liter of amalgam [$LiHg_3$ (s) + 0.8 M Li(Hg)] were prepared by continuing the electrolysis of lithium hydroxide solution at 8 volts, instead of the usual 5, past the saturation point at room temperature.

A floating sludge [~6 M Li(Hg)]accumulated and was skimmed from the cathode, and the underflow [~0.8 M Li(Hg)], butted up with clean mercury, was returned to the electrolytic cell for further lithium amalgam slurry production. The sludge was dried in anhydrous methanol and added to the 0.7 M amalgam filtrate from a previous reduction to butt it up to 2.3 M. The electrolytic production of lithium amalgam requires that the mercury cathode be free of such metals as uranium, zirconium-niobium, and iron, and therefore only distilled mercury entered the electrolytic cell.

3.8 Recycle of Spent Lithium Amalgam

The recycle of amalgam filtrates from the uranium amalgam reduction product filtration step to the reduction reactor appears feasible. In three experiments, filtered spent amalgams from reduction runs, containing 0.02 to 0.1 wt % uranium,

Table 3.6 Separation of Solids from Aqueous Amalgam Wash Wastes

Vol of wash slurry per run: ~1 liter
Initial slurry: uranium as UF_4, 2.2 g/liter; LiF, 8 g/liter; mercury, 50 g/liter; pH ~6.0
pH adjusted with lithium hydroxide

Methods	pH	Average Settling or Filtration Rate	Percent of Initial Components Appearing in Supernatant or Filtrate		
			U	Hg	Li
Settling	Unadjusted	2 vol % per hour	1.07	0.001	87.5
Settling	8	3.2 vol % per minute	0.24	0.001	84.0
Centrifugation, 15 min, 2000 rpm	Unadjusted	No measurable rate; supernatant turbid, white	0.32	0.001	100.0
Centrifugation	9	32 vol % per minute	0.001	0.001	80.0
Centrifugation	8	32.5 vol % per minute	0.23	0.001	79.5
Filtration	Unadjusted	0.73 $ml/cm^2/hr$	2.7	0.001	76.0
Filtration	8	Very slow; 16 hr required for 1 liter	-	-	-

45 to 100 ppm fluoride, and 0.85 to 1.13 M unreacted lithium, were reinforced with 6 M $LiHg_3$-Hg sludge to 2.3 M Li(Hg) and used in subsequent UF_6 reduction runs. Seventy-three to 85% of the uranium in the UF_6 feed was converted to UHg_4. It was concluded that recycling spent amalgam back to the reactor would not decrease metal yields.

4.0 APPARATUS AND PROCEDURE FOR THE STUDY OF THE REDUCTION STEP

4.1 Apparatus

The apparatus used for the study of the reduction step is shown schematically in Fig. 4.1. Five variations in reactor design were tested but only the turbomixer is shown, since it produced the maximum UHg_4 yields.

Uranium hexafluoride, held as an unstable complex on a bed of 12-20 mesh NaF pellets, was heated in a stream of argon at 325°C to decompose the complex at a uniform rate so that a steady and predictable feed of UF_6 to the reactor could be obtained.[4] The NaF bed was loaded with UF_6 from a storage cylinder at 60°C.

In the turbomixer reactor UF_6-argon mixture was delivered to a point within the central draft tube immediately above the amalgam. With the agitator turning, the flow of amalgam in the draft tube was downward along the agitator shaft toward the agitator blades. The vortex, which was created by the agitation action, mixed the gases with the amalgam. The shearing action provided by the agitator blades turning at 1100 rpm at close proximity to and inside the sharp-edged baffles caused intimate mixing of the fluorides with the lithium amalgam.

In the gas-sparged reactor, the UF_6-argon mixture was introduced beneath the surface of the amalgam. There was no agitator, baffles, or draft tube, and the only agitation provided was the sparging action of the gases passing through the amalgam.

Three types of amalgam spray reactors were tried. In one, the amalgam was sprayed through perforations in a sprinkler head downward through the gases, which were introduced near the bottom above the amalgam surface. This type did not operate well because solids, which tended to form at the amalgam entrance, blocked the spray head and interfered with the dispersal of the amalgam. In a second spray type the amalgam was dropped on an agitator, while UF_6 and argon were passed through the reactor countercurrent to the amalgam flow. In this type, the amalgam tended to be thrown against and adhere to the reactor walls. The third spray type was like the second, except that baffles were used to increase the spray. This produced the best results of any of the spray reactors, but none were as efficient as the turbomixer. One of the features of spray reactors was that reacted amalgam was not brought into any significant second contact with incoming UF_6, and hence the oxidizing action of UF_6 on UHg_4 was minimized. In all spray reactors more than 50% of the UF_6 passed through the reactor unreduced.

Off-gases from the reactor were passed first through a trap of solid soda lime and then through 3 M NaOH to absorb any UF_6 that passed through the reactor unreduced. The residual argon was metered in a wet test meter to measure total flow and rate of flow.

UNCLASSIFIED
ORNL-LR-DWG 52334

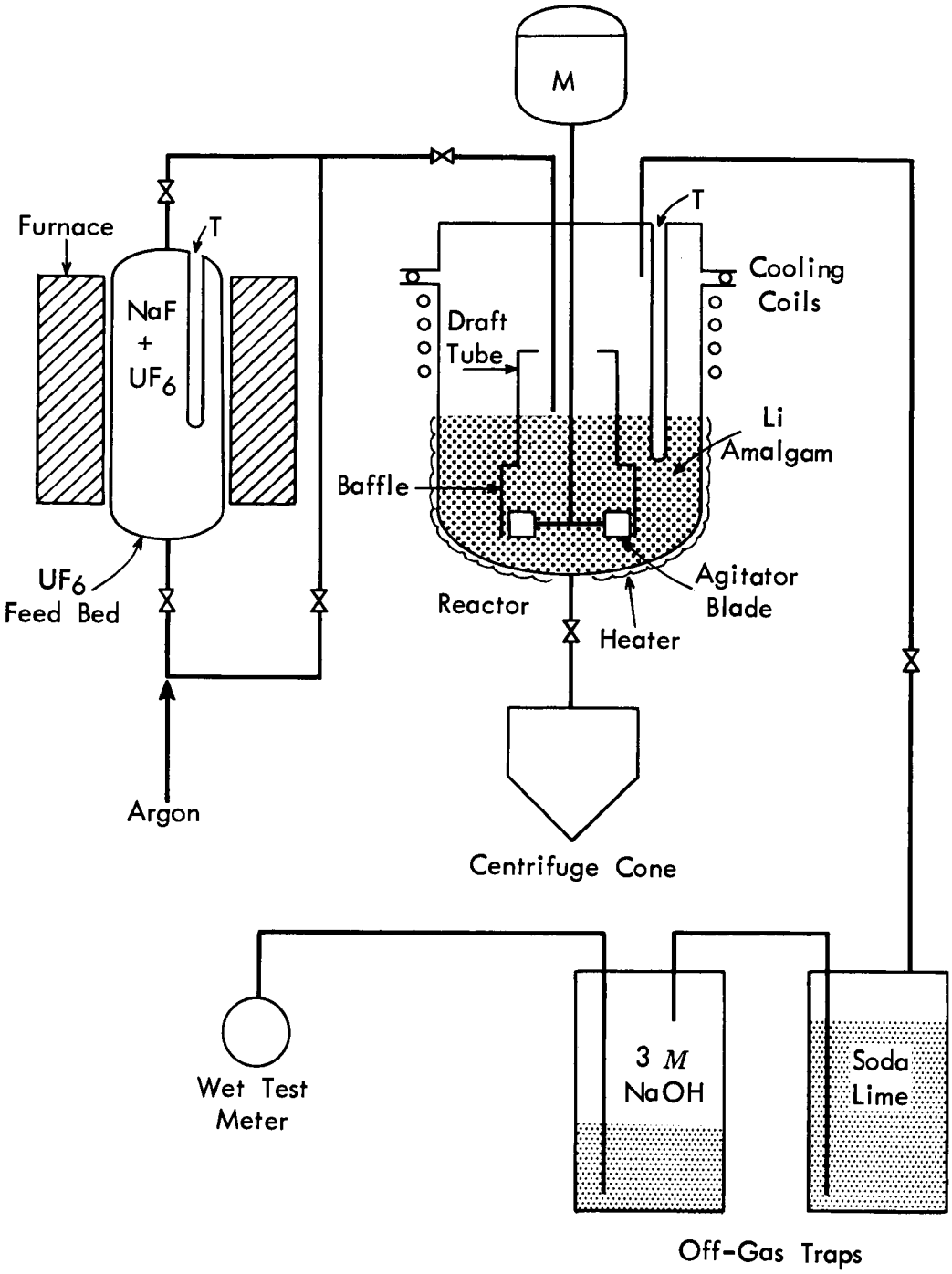

Fig. 4.1. Laboratory apparatus for amalgam reduction of UF_6.

4.2 Run Procedure

After assembly, the apparatus was swept overnight with a slow stream of argon to purge out air. About 250 ml of amalgam was charged to the reactor, and the argon purge was continued for one more hour. The agitator was turned on and the argon flow was directed through the NaF feed bed as the furnace heated it to 325°C. Approximately 10 min was required to attain this temperature. The temperature of the reactor was controlled by heating electrically or by water cooling. When runs were made below 100°C, cooling was required to dissipate the heat of mixing and heat of reaction. Passage of 5 liters per hour of argon through the NaF feed bed at 325°C carried 12 ± 0.5 g of UF_6 to the reactor in 30 min. The average contact time for this period was considered to be 15 min. For 30 min contact time, agitation of the amalgam was continued 15 min beyond the feed period. The quantity of UF_6 feed was obtained by weight difference of the NaF bed before and after the run. The UF_6 retained by the reactor was obtained by difference in weight between feed and UF_6 found in the soda lime trap. No uranium was carried to the NaOH trap.

At the end of the agitation the amalgam product was withdrawn under argon to centrifuge tubes and batch-centrifuged at ~700 G for 15 min or to a filter and filtered under argon. When the product was centrifuged, the top, or salt, phases were skimmed from each tube and combined. The middle, or spent, liquid amalgams were poured off and combined; and the bottom quasi amalgam phases were combined. Each of three combined phases was weighed and washed separately. When the product of the reduction was filtered, the residue on the filter was washed. The aqueous phases contained insoluble solids which settled. The supernatants were sampled for uranium, fluoride, and lithium determinations. The solids were dissolved in concentrated nitric acid and the solutions sampled for uranium. All mercury phases were composite-sampled, and the sample was dissolved in nitric acid. The nitric acid solutions were analyzed for uranium by a colorimetric method. A sample of the spent liquid amalgam was analyzed by a flame photometer method for unreacted lithium.

5.0 REFERENCES

1. R. E. Blanco and B. H. Morrison, "Reduction of UF_6 to Metal with Sodium Amalgam," TID-7518, Part 2, p. 211 (1956).

2. O. C. Dean, "Proposed Program in Feed Materials Processing for Fiscal Years 1958 and 1959," ORNL-CF-58-4-61 (April 1958).

3. O. C. Dean, E. Sturch, B. H. Morrison, and R. E. Blanco, "Status of the Hermex Process," ORNL-2242 (1957).

4. G. I. Cathers, "Uranium Recovery from Spent Fuel by Dissolution in Fused Salt and Fluorination," Nuclear Sci. Eng. 2:768 (1957).

ORNL-2770
UC-4 – Chemistry
TID-4500 (16th ed.)

INTERNAL DISTRIBUTION

1. Biology Library
2. Health Physics Library
3-4. Central Research Library
5. Reactor Division Library
6. ORNL - Y-12 Technical Library
7-26. Laboratory Records Department
27. Laboratory Records, ORNL R.C.
28. E. D. Arnold
29. R. E. Blanco
30. G. E. Boyd
31. J. C. Bresee
32. K. B. Brown
33. F. R. Bruce
34. C. E. Center
35. R. A. Charpie
36. R. S. Cockreham
37-38. F. L. Culler
39. W. K. Eister
40. O. C. Dean
41. D. E. Ferguson
42. J. H. Frye, Jr.
43. H. E. Goeller
44. A. T. Gresky
45. C. E. Guthrie
46. C. W. Hancher
47. C. S. Harrill
48. A. Hollaender
49. A. S. Householder
50. R. G. Jordan (Y-12)
51. W. H. Jordan
52. C. P. Keim
53. M. T. Kelley
54. J. A. Lane
55. T. A. Lincoln
56. S. C. Lind
57. R. S. Livingston
58. K. Z. Morgan
59. J. P. Murray (K-25)
60. M. L. Nelson
61. D. Phillips
62. P. M. Reyling
63. H. E. Seagren
64. E. D. Shipley
65. M. J. Skinner
66. A. H. Snell
67. J. A. Swartout
68. E. H. Taylor
69. J. W. Ullmann
70. W. E. Unger
71. A. M. Weinberg
72. M. E. Whatley
73. C. E. Winters
74. R. G. Wymer
75. J. W. Youngblood
76. D. L. Katz (consultant)
77. C. E. Larson (consultant)
78. I. Perlman (consultant)
79. J. H. Rushton (consultant)
80. H. Worthington (consultant)
81. T. H. Pigford (consultant)

EXTERNAL DISTRIBUTION

82. Division of Research and Development, AEC, ORO
83-674. Given distribution as shown in TID-4500 (16th ed.) under Chemistry category (75 copies - OTS)