MARTIN MARIETTA ENERGY SYSTEMS LIBRARIES
3 4456 0361455 0

CENTRAL RESEARCH LIBRARY
DOCUMENT COLLECTION

ORNL-2855
UC-10 – Chemical Separations Processes
for Plutonium and Uranium

LABORATORY DEVELOPMENT OF A TRIBUTYL PHOSPHATE SOLVENT EXTRACTION PROCESS FOR PROCESSING 20% ENRICHED URANIUM ALLOY FUEL

J. H. Goode
J. R. Flanary

CENTRAL RESEARCH LIBRARY
DOCUMENT COLLECTION
LIBRARY LOAN COPY
DO NOT TRANSFER TO ANOTHER PERSON
If you wish someone else to see this document, send in name with document and the library will arrange a loan.

OAK RIDGE NATIONAL LABORATORY
operated by
UNION CARBIDE CORPORATION
for the
U.S. ATOMIC ENERGY COMMISSION

Printed in USA. Price $0.50. Available from the

Office of Technical Services
Department of Commerce
Washington 25, D.C.

LEGAL NOTICE

This report was prepared as an account of Government sponsored work. Neither the United States, nor the Commission, nor any person acting on behalf of the Commission:

A. Makes any warranty or representation, expressed or implied, with respect to the accuracy, completeness, or usefulness of the information contained in this report, or that the use of any information, apparatus, method, or process disclosed in this report may not infringe privately owned rights; or

B. Assumes any liabilities with respect to the use of, or for damages resulting from the use of any information, apparatus, method, or process disclosed in this report.

As used in the above, "person acting on behalf of the Commission" includes any employee or contractor of the Commission, or employee of such contractor, to the extent that such employee or contractor of the Commission, or employee of such contractor prepares, disseminates, or provides access to, any information pursuant to his employment or contract with the Commission, or his employment with such contractor.

ORNL-2855

Contract No. W-7405-eng-26

CHEMICAL TECHNOLOGY DIVISION

CHEMICAL DEVELOPMENT SECTION B

LABORATORY DEVELOPMENT OF A TRIBUTYL PHOSPHATE SOLVENT EXTRACTION PROCESS FOR PROCESSING 20% ENRICHED URANIUM ALLOY FUEL

J. H. Goode
J. R. Flanary

DATE ISSUED

MAY 16 1961

OAK RIDGE NATIONAL LABORATORY
Oak Ridge, Tennessee
operated by
UNION CARBIDE CORPORATION
for the
U.S. ATOMIC ENERGY COMMISSION

MARTIN MARIETTA ENERGY SYSTEMS LIBRARIES

3 4456 0361455 0

ABSTRACT

A preliminary chemical flowsheet was developed on a laboratory scale for the preparation of feed and two solvent extraction cycles for the processing of silicon-containing aluminum-uranium alloy, 20% enriched, fuel elements. Major process steps include dissolution of the fuel assembly in mercury-catalyzed nitric acid, removal of silica by coagulation during feed clarification, and recovery of uranium and plutonium by extraction with a tributyl phosphate solvent and selective stripping. Criticality control in existing process equipment is maintained by the use of internal neutron poisons and concentration control throughout the process.

CONTENTS

		Page
1.0	Introduction	4
2.0	Flowsheet	4
3.0	Process Development	5
3.1	Dissolvent Concentrations	5
3.2	Inactivation or Removal of Silica	9
3.3	Feed Clarification	9
3.4	First Solvent Extraction Cycle	11
3.5	Second Solvent Extraction Cycle	19
3.6	Nuclear Safety	19
4.0	References	23
5.0	Appendix	23

1.0 INTRODUCTION

The studies reported here cover laboratory development of feed preparation and solvent extraction flowsheets for research reactor fuel assemblies of the MTR box type, scheduled to be processed at ORNL. These assemblies are a stack of 12 aluminum-clad fuel elements, 0.060 in. thick, brazed to aluminum side plates and end sections. The core of the fuel plates is 48% uranium, as uranium dioxide, up to 3% silicon, and the balance aluminum; the uranium is enriched to 20% U-235.[1] Design burnup is about 17%. Each unirradiated assembly will contain 5.10 kg of aluminum, 900 g of uranium, and up to 110 g of silicon; after irradiation the spent elements will contain roughly 84% aluminum, 15% uranium, 1% silicon, and about 5 g of plutonium per kilogram of total uranium.[2] Since the research reactor fuel elements being studied are of the uranium-aluminum alloy type, a TBP-25 process type of solvent extraction flowsheet was chosen.[3]

The flowsheets were designed for maximum throughput in existing equipment in the ORNL Pilot Plant, Building 3019. A basic consideration in the flowsheet development was the use of Thorex first and second cycle equipment with minimum changes. All work was done on prototype unirradiated fuel elements.

The authors acknowledge the assistance of L. A. Byrd and R. C. Shipwash, who carried out many of the laboratory manipulations, and the various groups of the Analytical Chemistry Division, under J. H. Cooper, W. R. Laing, and G. R. Wilson, who performed the analyses required in the flowsheet development.

2.0 FLOWSHEET

Figure 1 summarizes the feed preparation and first solvent extraction cycle flowsheet for the processing of one partially enriched uranium-aluminum alloy fuel assembly.* The irradiated fuel assembly is charged to the dissolver vessel and completely dissolved at about 100°C in 126 liters of 7.5 M HNO_3—0.005 M $Hg(NO_3)_2$—0.05 M H_3BO_3; the mercuric nitrate is a catalyst for the dissolution of the aluminum and the boric acid is a neutron poison for criticality control with the partially enriched uranium. The dissolver product is cooled to 85°C, 1.3 liters of 1% gelatin solution is added, and the whole is digested for 1 hr at 85°C to coagulate the silica-gelatin polymer. A total of 2 g of Johns-Manville No. 545 Celite filter aid per liter is added as a water slurry and mixed, and the mixture is filtered through a 30-mesh Ottawa sand bed precoated with No. 545 Celite filter aid to remove the silica-gelatin polymer. The filter cake is washed with 27.4 liters of 0.1 M HNO_3 to remove uranium and plutonium. The 157.5 liters of

*Based on early 1958 design data for a Euratom reactor.[10] Flowsheet variations must be made for each reactor core being processed. Reference 12 summarizes the ranges of compositions for various reactor fuels.

UNCLASSIFIED
ORNL-LR-DWG 53079

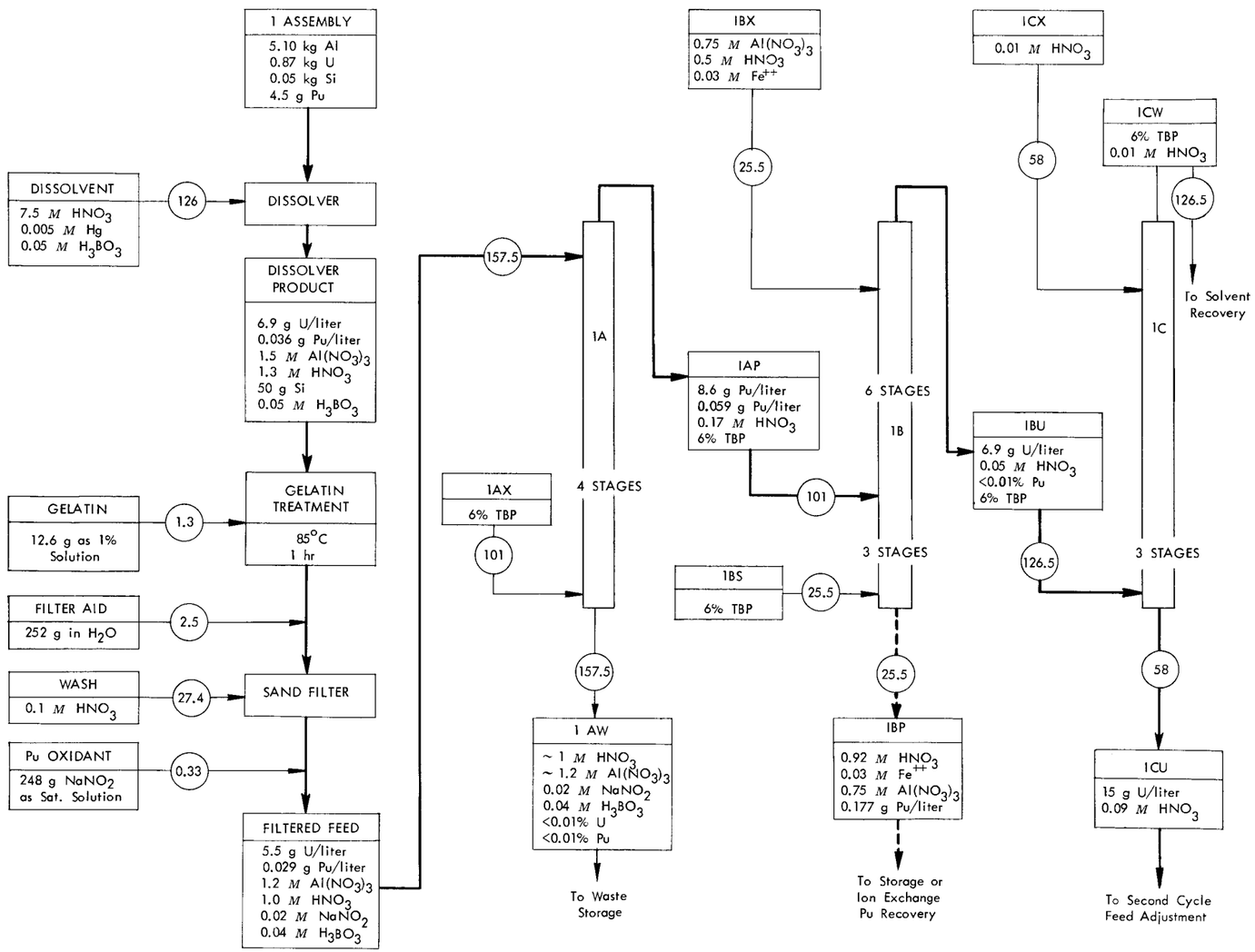

Fig. 1. First cycle of processing flowsheet for silicon-containing aluminum-uranium alloy fuel elements.

filtered feed is made 0.02 M in sodium nitrate, to oxidize plutonium to Pu(IV), and is then fed to the top of the 1A column, in which the uranium and plutonium are countercurrently extracted in 4 theoretical stages into 101 liters of 6% TBP in Amsco 125-82 diluent. The aqueous raffinate, containing about 1 M HNO_3, 1.2 M $Al(NO_3)_3$, most of the fission products, and less than 0.01% of the uranium and plutonium, goes to waste storage.

The solvent phase passes to the 1B (partitioning) column, where the plutonium and the rest of the fission products are separated, in 6 stages, from the uranium by the 1B aqueous scrub stream, which contains ferrous sulfamate to reduce the plutonium to the non-organic-extractable Pu(III). Traces of uranium are scrubbed from the plutonium stream by 25.5 liters of 6% TBP in 3 stages. The plutonium product (1BP) is stored for further solvent extraction processing, or it may be purified and concentrated by ion exchange. Figure 9, in the appendix, is an untested alternative flowsheet involving 80% recycle of the plutonium for the purpose of increasing the plutonium concentration in the 1BP product stream.

The uranium-bearing 1BU passes to the 1C column where the uranium is stripped from the solvent in less than 3 stages into dilute nitric acid. The 58 liters of uranium product (1CU) is continuously adjusted to second cycle feed concentrations by the addition of nitric acid, aluminum nitrate, and ferrous sulfamate (Fig. 2), and is then metered to the 2A extraction-scrub column in which the uranium is re-extracted in about 3.5 theoretical stages by 6% TBP and scrubbed free of fission products and plutonium by the 2AS stream. This second cycle aqueous scrub stream contains a high (1.8 M) concentration of aluminum nitrate in order to provide maximum salting strength when mixed with the feed in the extraction section of the column. The uranium product is stripped from the solvent in the 2C column by dilute nitric acid in about 3 stages and passes to a silica gel column for removal of zirconium-niobium or to a third solvent extraction cycle.

3.0 PROCESS DEVELOPMENT

3.1 Dissolvent Concentrations

The solvent extraction feed should have a maximum nitrate salting strength at a critically safe uranium concentration, taken here as 6 g of uranium per liter, and about 1.2 M aluminum. The dissolver product must be slightly more concentrated to allow for feed clarification and adjustment. In a series of experiments with prototype fuel plate, a dissolvent nitric acid concentration of 7.5 M was shown to produce a dissolver product containing 1.2 M HNO_3, and 1.5 M aluminum (Table 1, Fig. 3).

UNCLASSIFIED
ORNL-LR-DWG 53080

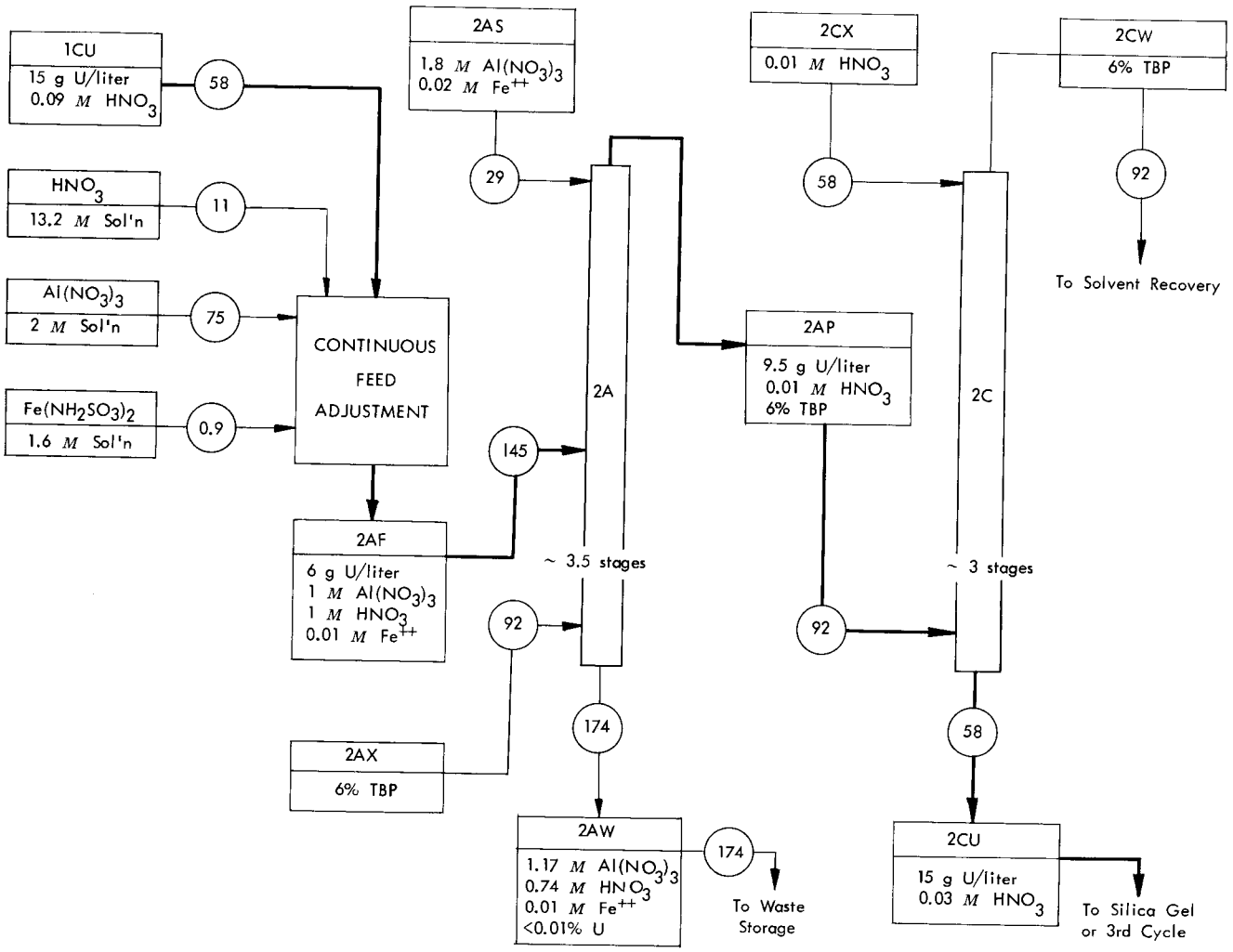

Fig. 2. Second cycle of processing in flowsheet for silicon-containing aluminum-uranium alloy fuel elements. Basis: 1 assembly; volumes in liters.

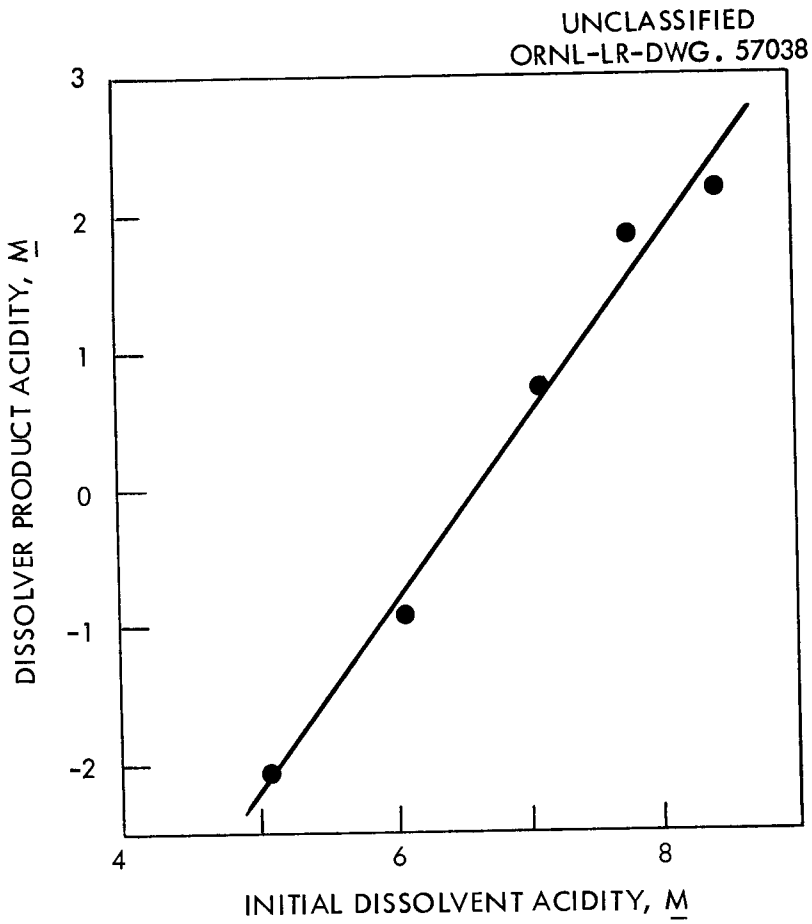

Fig. 3. Effect of initial dissolvent acidity on final acidity of 1.5 M $Al(NO_3)_3$ dissolver product.

Table 1. Effect of Dissolvent Acidity on Dissolver Product Concentrations

Catalyst: 0.005 M Hg^{++}

Expt. No.	Fuel, g	Dissolvent Vol, ml	Dissolvent HNO_3, M	Dissolution Rate, $mg/cm^2 \cdot min$	Dissolver Product H^+, M	Dissolver Product Al, M	Dissolver Product U, mg/ml
1	14.5	290	5.1	10.9	2.1 AD	1.8	--
2	12.7	250	6.1	10.4	0.9 AD	1.8	--
3	14.5	290	7.2	9.0	0.7	1.6	--
4	13.0	260	7.8	8.8	1.8	1.6	--
5	14.5	290	8.4	7.9	2.2	1.6	--
6	34.5	700	8.0	----	2.0	1.4	7.3
7	50.0	1000	8.2	----	1.3	1.5	4.2

3.2 Inactivation or Removal of Silica

A Thorex-type feed adjustment—dehydration step,[4] in which the dissolver product is evaporated to a small volume, could not be used because of the criticality hazard with concentrated solutions of enriched uranium. The TBP-25 process[3] uses a high-acid silica dehydration step, but this was not considered after it was found (Sect. 3.4a) that uranium recovery was higher at low acidities. The gelatin treatment developed at the Savannah River Laboratories[5] for removing silica was adopted. The method involves adjustment of the solution to 0.5-1.5 M H^+, addition of 100 mg of gelatin, as a 1% solution, per liter, digestion at 85°C for 30-60 min, and filtration or centrifugation of the polymer from the solution. In scouting experiments with high-silica uranium-aluminum alloy, specimens were dissolved in 8 M HNO_3—0.005 M $Hg(NO_3)_2$ and treated with gelatin, and the solution was equilibrated with an equal volume of 6% TBP in Amsco 125-82. Filtered gelatin-treated feed settled to a clear interface in about 20 sec, which is more than adequate for pulsed column operation. Unfiltered gelatin-treated feed settled very slowly, and untreated feed formed a near-stable emulsion.

Uranium and Plutonium Losses. Material balances from a spiked dissolver product to the combined filtrate and wash solutions showed no loss of uranium and plutonium to the gelatin-silica polymer. For the tests 34.5 g of prototype fuel plate was dissolved in 700 ml of 8 M HNO_3—0.005 M $Hg(NO_3)_2$, and the dissolver product was spiked with plutonium nitrate solution to 6.39×10^5 Pu α c/m/ml. Then 7 ml of a 1% gelatin solution was added, the solution was digested at 85°C for 1 hr, and filtered through 1 in. of sea sand on a medium-porosity fritted glass filter, and the filter was washed with 100 ml of 0.1 M HNO_3 to remove occluded uranium and plutonium.

Radiation Stability of Gelatin-Silica Polymer. Calculations based on 15% burnup of partially enriched uranium-aluminum alloy fuel and 120 days' decay indicated that an adjusted feed solution would have a total fission product power density of 0.38 watt/liter.[6] Irradiation in a Co-60 γ source to levels of 2.5 and 5 times the expected dose during processing had no apparent effect on the settling time of the polymer. Samples of dissolver product containing the gelatin-silica polymer were irradiated and both these and a control sample were filtered and equilibrated with 6% TBP. Settling times were of the order of 21 sec for all samples.

3.3 Feed Clarification

A sand filter has the advantages of a low capital investment, ease of remote operation, less chance of plugging by silica slimes, and simplicity of discharge of the filter cake and/or filter medium to waste by fluidization and jetting.[7,8] Gravity filtration through a 30-mesh precoated sea sand filter clarified the feed at a reasonable rate, >1 ml/cm^2/min, when 1 g of Johns-Manville Celite 545 filter aid per liter was added to the feed (Fig. 4). In the absence of filter aid, the flow started at a relatively high rate but decreased rapidly

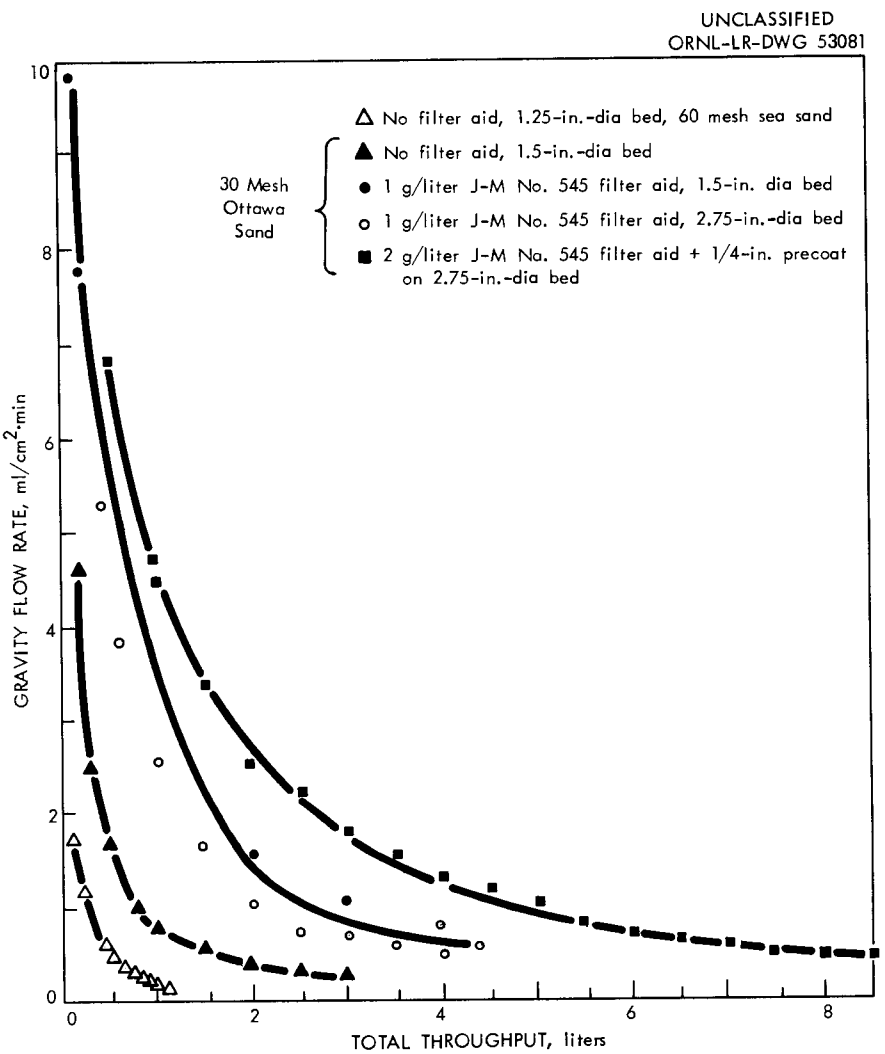

Fig. 4. Filtration of gelatin-treated high-silicon uranium-aluminum alloy solutions through sand; 6-in. constant head of solution above the beds.

as the cake became plugged with polymer and fines. The flow rate was to some extent dependent on the amount of filter aid used, and was essentially independent of the bed diameter. With 60-mesh sand the filtration rate became prohibitively low (<0.5 ml/min/cm^2) after less than 500 ml of gelatin-treated feed (about 1 bed volume) had been passed.

Raw feed solutions for the sand filtration experiments were prepared by dissolving sections of a prototype fuel element in mercury-catalyzed nitric acid. A typical dissolution of 1555 g of fuel element in 50 liters of 6.4 M HNO_3—0.005 M $Hg(NO_3)_2$ gave a product containing 5.6 mg of uranium per milliliter, 0.95 M aluminum, and 3 M HNO_3. This solution was adjusted to flowsheet conditions, 1.2 M aluminum, and 0.5-1.0 M HNO_3, by dissolution of additional 2S aluminum. The adjusted solution, green in color, was cloudy with suspended matter and contained copious amounts of colorless silica and heavy, black, insoluble fines. To it was added 0.1 g of gelatin, as a 1% solution, per liter of solution, and it was digested at 85°C for 1 hr and allowed to settle. A floc of gelatin-silica polymer partially clarified the solution as it slowly settled. Two laboratory-scale sand filters were prepared from 1.25-in.-dia glass burets holding about 10 in. of graded sand on glass wool plugs. Two experiments were made in a 2.75-in.-dia by 8-in.-deep 30-mesh Ottawa sand bed. With a dip tube extending to within 1/2 in. of the sand, the filter cake could be fluidized by backwashing and removed without disturbing the sand bed. Flow rates in the regenerated bed were comparable to those in new beds.[9]

Vacuum Filtration. The results of two experiments on vacuum filtration were unsatisfactory. A 4-in.-dia by 12-in.-deep bed of 20- to 40-mesh Ottawa sand was used to filter 50 liters of gelatin-treated dissolver product, using vacuum to pull the solution downflow through the bed in about 50 min. After about 20 liters of clear filtrate had been obtained, black fines and gelatin polymer broke through the bed. A 1/2-in.-deep "Superfiltrol" filter aid cake on top of the sand was pulled through the filter bed in a second experiment.

3.4 First Solvent Extraction Cycle

Effect of Solvent Concentration and Feed Acidity on Uranium and Plutonium Extraction. Data from equal-volume equilibrations indicated that 6% TBP would be a better extractant than 2.5% for uranium and Pu(IV) from feed solutions of acidities from 0.5 to 4 M (Table 2, Fig. 5a). The higher distribution coefficients and lower HETS values would give higher throughputs in existing equipment. The 2.5% TBP was tested as a possible means of criticality control through limitation of the uranium concentration in the organic phase. The aqueous phase in these experiments was filtered feed solutions prepared from prototype reactor fuel plate and adjusted to 5.2 mg U/ml, 1 M $Al(NO_3)_3$, 5×10^5 Pu α c/m/ml, 0.01 M $NaNO_2$, and varying nitric acid concentrations.

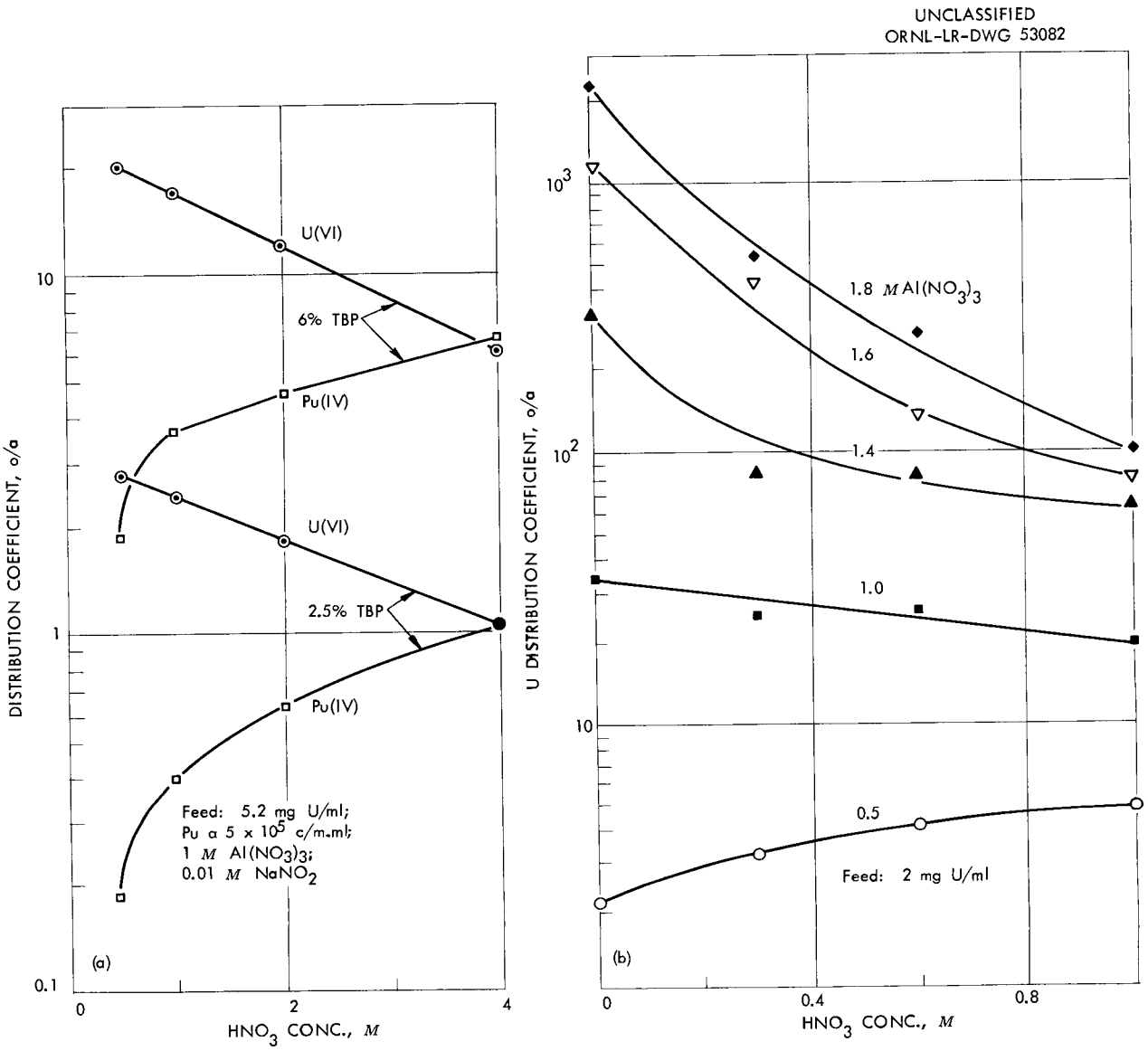

Fig. 5. Effect of (a) acidity and TBP concentration (in Amsco 125-82) on uranium and Pu(IV) distribution and (b) acidity and aluminum nitrate concentration on uranium distribution to 6%-TBP. Equal-volume equilibrations of aqueous feed and organic solvent.

The twofold effect of the nitric acid in the aqueous phase is particularly emphasized in Fig. 5a, where it may be seen depressing the extraction of the macro amounts of uranium through formation of the $HNO_3 \cdot TBP$ complex, while at the same time it enhances extraction of Pu(IV) through its salting effect.

Effect of Aluminum Nitrate and Nitric Acid Concentrations on Uranium Extraction. Published distribution data (Fig. 5b), however, have shown that highest uranium distribution coefficients in mixed nitric acid-aluminum nitrate systems were obtained at low acidities.[3] Recent experiments gave uranium distribution coefficients, in equal-volume equilibrations with 6% TBP and 1 M $Al(NO_3)_3$—5.2 mg U/ml solutions of varying acidities, of 20 at 0.5 M HNO_3 down to 6 at 4 M HNO_3.

Extraction-Column Equilibria. Use of an extraction-only A column in the Pilot Plant required determination of uranium equilibria. The data from a batch countercurrent experiment (Table 3, Fig. 6a) show that about 4 theoretical stages are required to hold uranium losses to less than 0.01%. Extrapolation of plutonium loss data to full level plutonium concentration (10^8 α c/m/ml) indicates that losses to the aqueous raffinate would be negligible. This estimate will be confirmed in mixer-settler experiments in the near future, with fully irradiated fuel specimens.

Partitioning Column Equilibria. A batch countercurrent experiment, using a Purex-type partitioning solution, i.e., 0.5 M HNO_3—0.03 M $Fe(NH_2SO_3)_2$, established equilibrium data for a partitioning column for the separation of plutonium from the solvent cascading from the extraction-only column. Uranium reflux was excessive in the partitioning section because of the low salting strength of the plutonium partitioning solution.

Partitioning-Scrub Column Equilibria. Adaptation of the solvent extraction flowsheet for the processing of 20% enriched uranium fuel to the Bldg. 3019 Pilot Plant necessitated changes to provide for an extraction-only A column and a combined scrubbing-partitioning B column in order to fit existing equipment. Equilibrium data for the revised B column conditions showed that about 6 partitioning and 3 scrub stages were required for the uranium/plutonium separation (Table 4). The change in the B conditions decreased the uranium reflux to about 2.5%.

Stripping Column Equilibria. The results of a batch countercurrent experiment showed that 2 stages are needed for stripping with a loss of only 0.01% (Table 5). A McCabe-Thiele diagram (Fig. 6b) indicated that 2.5-3 theoretical stages are needed.

UNCLASSIFIED
ORNL-LR-DWG 53083

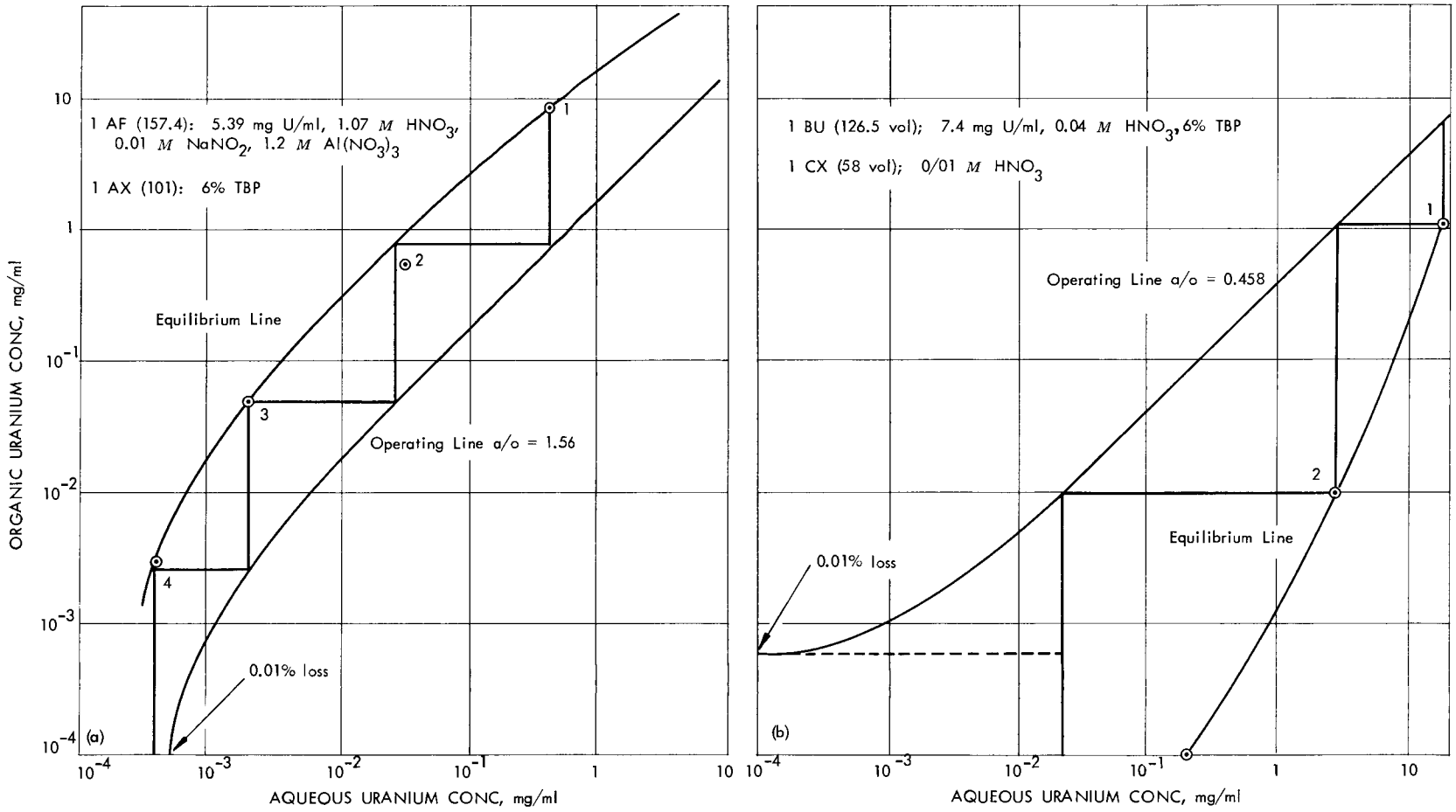

Fig. 6. McCabe-Thiele diagrams for first cycle uranium (a) extraction and (b) stripping.

Table 2. Effect of Acidity and Solvent Concentration on the Distribution of U(VI) and Pu(IV)

Feed: 5.2 mg U/ml, 5 x 10^5 Pu γ c/m/ml, 1 M $Al(NO_3)_3$, 0.01 M $NaNO_2$, varying acidities

Solvent: 2.5 and 6.0% TBP in Amsco 125-82

Equal-volume equilibrations

Feed HNO_3, M	Distribution Coefficient, o/a			
	2.5% TBP		6.0% TBP	
	U(VI)	Pu(IV)	U(VI)	Pu(IV)
0.5	2.74	0.18	20.0	1.87
1.0	2.43	0.40	17.1	3.73
2.0	1.79	0.64	12.0	4.66
4.0	1.04	1.03	6.1	6.52

Table 3. First Cycle Extraction Column Equilibria

Feed (100 vol): 5.39 mg U/ml; 1.07 M HNO_3; 1.2 M $Al(NO_3)_3$; 6.78 x 10^5 Pu α c/m/ml; 0.01 M $NaNO_2$

Solvent (64 vol): 6% TBP in Amsco 125-82

7 extraction stages: 5 volume changes

Stage No.	Uranium, mg/ml		U E_a^o	Plutonium, α c/m/ml		Pu E_a^o
	o	a		o	a	
1E	8.20	0.425	19.3	9.93×10^5	2.30×10^5	4.22
2E	0.55	0.032	17.2	3.42×10^5	3.31×10^4	10.6
3E	0.050	0.002	25.0	5.33×10^4	6.03×10^3	8.84
4E	0.003	0.0004	7.5	8.56×10^3	1.62×10^3	5.28
5E	0.0003	0.0004	7.5	2.16×10^3	784	2.75
6E	0.0001	0.0004	0.25	695	560	1.24
7E	0.0001	0.0004	--	300	568	--

Table 4. First-Cycle Partitioning Column Data

Feed (64 vol): 12.71 mg U/ml, 0.18 M HNO_3, 4.82 x 10^5 Pu γ c/m/ml, 6% TBP
Pu strip (8 vol): 0.75 M $Al(NO_3)_3$, 0.48 M HNO_3, 0.03 M $Fe(NH_2SO_3)_2$
Organic scrub (16 vol): 6% TBP
5 partitioning, 4 scrub stages; 5 volume changes

Stage No.	Uranium, mg/ml			Plutonium, c/m/ml			HNO_3, M	
	o	a	E_a^o	o	a	E_a^o	o	a
5P	10.5	2.08	5.05	1.56×10^3	5.26×10^4	3×10^{-2}	0.07	0.50
4P	10.4	1.94	5.37	3.48×10^3	1.23×10^5	3×10^{-2}	0.07	0.68
3P	10.7	2.11	5.05	8.92×10^3	5.58×10^5	2×10^{-2}	0.09	0.70
2P	10.5	1.85	5.67	3.95×10^4	1.90×10^6	2×10^{-2}	0.09	0.90
1P	10.6	9.26	1.15	1.68×10^5	4.11×10^6	4×10^{-2}	0.11	1.30
1PS	0.97	0.068	14.4	3.20×10^4	4.24×10^6	8×10^{-3}	0.12	1.36
2PS	0.060	0.004	15.0	2.67×10^4	2.09×10^6	1×10^{-2}	0.12	1.42
3PS	0.004	0.001	4.0	3.22×10^4	4.39×10^6	7×10^{-3}	0.12	1.40
4PS	0.0007	0.0006	1.0	2.84×10^4	4.14×10^6	7×10^{-3}	0.10	1.14

Table 5. First Cycle Uranium Stripping Column Data

IBU (126.5 vol): 7.4 mg U/ml, 0.04 M HNO_3, 6% TBP
ICX (58 vol): 0.01 M HNO_3
6 stripping stages: 5 volume changes

Stage No.	Uranium, mg/ml		E_a^o
	o	a	
1	1.14	18.40	0.62
2	0.01	2.76	0.004
3	<0.0001	0.20	--
4	<0.0005	0.002	--
5	<0.0005	0.0005	--
6	<0.0005	0.0005	--

Pulsed Column Demonstrations. The results of two runs in pulsed columns confirmed that the conditions given in Fig. 1 should be acceptable for operation in the Building 3019 Pilot Plant. The conditions used are shown in Table 6. Uranium losses were of the order of 0.001% to each waste stream (Table 7), which may be extrapolated to negligible losses with full-level amounts of plutonium. The effectiveness of the gelatin head-end filtration step for silica removal was evidenced by absence of interfacial emulsions in the columns.

Table 6. Operating Conditions for First Cycle Pulsed Column Runs on Processing of 20% Uranium Alloy Fuel

	Flow Rate, ml/min	Composition
		1st Run
Aqueous feed, AF	46.4	5.93 mg U/ml, 0.96 M HNO_3, 1.2 M $Al(NO_3)_3$, 0.01 M $NaNO_2$, 0.05 M H_3BO_3, 4.04×10^5 Pu α c/m/ml
Organic, AX	34	6% TBP in Amsco 125-82
Aqueous scrub, BX	8	0.47 M HNO_3, 0.75 M $Al(NO_3)_3$, 0.003 M, $Fe(NH_2SO_3)_2$, 0.05 M H_3BO_3
Organic scrub, BS	8	6% TBP in Amsco 125-82
Aqueous strip, CX	38.9	0.01 M HNO_3, 0.05 M H_3BO_3

2nd Run

AF 51.4: 5.23 g U/l, 0.83 M HNO_3, 1.2 M $Al(NO_3)_3$, 0.01 M $NaNO_2$, 0.05 M H_3BO_3, 8.74×10^5 Pu α c/m/ml

AX 32: 6% TBP in Amsco 125-82

BX 7.4: 0.5 M HNO_3, 0.75 M $Al(NO_3)_3$, 0.03 M $Fe(NH_2SO_3)_2$, 0.05 M H_3BO_3

BS: 6% TBP in Amsco 125-82

CX 38.6: 0.01 M HNO_3, 0.05 M H_3BO_3

Table 7. Uranium and Plutonium Losses in Pulsed Column First Cycle Runs

Stream	U, % of Total		Pu, % of Total	
	Run 1	Run 2	Run 1	Run 2
Aqueous raffinate, AW	< 0.001	< 0.001	0.015	0.03
Pu product, BP	< 0.001		0.07	
U product, BU		< 0.001		1%
Stripped organic, CW	< 0.001	< 0.002	0.09	

For the first run feed solution was prepared by dissolving 2S aluminum sheet in 8 M HNO_3—0.01 M $Hg(NO_3)_2$—0.05 M H_3BO_3 dissolvent, and uranyl nitrate was added. The second run was made with prototype fuel dissolved similarly. The raw feed solution was treated with gelatin to coagulate colloidal silica and filtered through 20-40 mesh Ottawa sea sand backed by a coarse fritted glass filter; filtration was extremely slow, requiring nearly 16 hr for 50 liters. The clarified feed was spiked with plutonium tracer. The runs were made in 0.75-in.-dia glass pulsed columns with 1-in. plate (23% free area) spacing. The extraction section in the A column was 22 ft, the partitioning section was 8 ft and the back-extraction section in the B column was 6 ft, and the stripping column was 11 ft. Pulse amplitudes and frequencies were 1 in. and 36 cpm in the A column, 1 in. and 40 cpm in the B column, and 1 in. and 39 cpm in the C column.

The second run required about 13 hr for 50 liters of feed solution; the first run required 14 hr for 50 liters. In the first run ferrous sulfamate was inadvertently omitted from the 1BX stream, thus converting the B column to a scrub column only. Typical flowing stream analyses from the first run were:

AP: 9.13 mg U/ml, 0.17 M HNO_3, 5.35×10^5 Pu α c/m/ml

AW: 0.00003 mg U/ml, 0.82 M HNO_3, 592 Pu α c/m/ml

BP: 0.00009 mg U/ml, 0.92 M HNO_3, 1.75×10^3 Pu α c/m/ml

BU: 6.75 mg U/ml, 0.07 M HNO_3, 3.95×10^5 Pu α c/m/ml

CU: 7.10 mg U/ml, 0.08 M HNO_3, 4.05×10^5 Pu α c/m/ml

CW: 0.00009 mg U/ml, 400 Pu α c/m/ml

3.5 Second Solvent Extraction Cycle

Extraction-Scrub Column Equilibria. The results of batch countercurrent experiments under second cycle extraction and scrubbing conditions (Fig. 2) indicated that 3.5 extraction stages are required to maintain uranium losses of less than 0.01% (Table 8, Fig. 7a). A neutral aluminum nitrate scrub solution, omitting ferrous sulfamate in the absence of plutonium, was used in the preliminary flowsheet testing on the basis of possible improvement in decontamination from fission products; an acidified aluminum nitrate scrub could also be used.

Stripping Column Equilibria. The results of a batch countercurrent experiment under approximate second cycle flowsheet conditions indicated that about 3 theoretical stages are required to decrease uranium losses to the spent solvent to less than 0.01% (Table 9, Fig. 7b).

Table 8. Second Cycle Uranium Extraction-Scrub Column Data

Feed (145 vol): 6.59 mg U/ml, 0.96 M HNO_3, 1 M $Al(NO_3)_3$
Scrub (29 vol): 1.8 M $Al(NO_3)_3$; $Fe(NH_2OH)_2$ omitted
Solvent (92 vol): 6% TBP

Stage No.	Uranium, mg/ml		E_a^o	HNO_3, M	
	o	a		o	a
4S	9.65	0.012	804	0.01	0.02
3S	9.92	0.014	719	0.03	0.03
2S	9.84	0.022	447	0.05	0.08
1S	9.95	0.026	383	0.05	0.14
1E	9.84	0.558	17.6	0.06	0.82
2E	0.964	0.032	30.5	0.13	0.80
3E	0.062	0.001	62.0	0.13	0.78
4E	0.003	0.0001	30.0	0.13	0.82
5E	0.0001	0.00004	2.5	0.12	0.74

3.6 Nuclear Safety

Fate of Boron in Dissolution and Feed Clarification. Boron has been proposed as an internal nuclear poison in all aqueous uranium-bearing streams; to be effective the boron must remain in solution at a molar concentration at least equal to that of the uranium. No boron was lost during dissolution of 50 g of prototype fuel in 1 liter of 8.25 M HNO_3-0.005 M $Hg(NO_3)_2$-0.05 M H_3BO_3, gelatin-treating of the dissolver product, and filtering through Whatman No. 42 paper (Table 10).

UNCLASSIFIED
ORNL-LR-DWG 53084

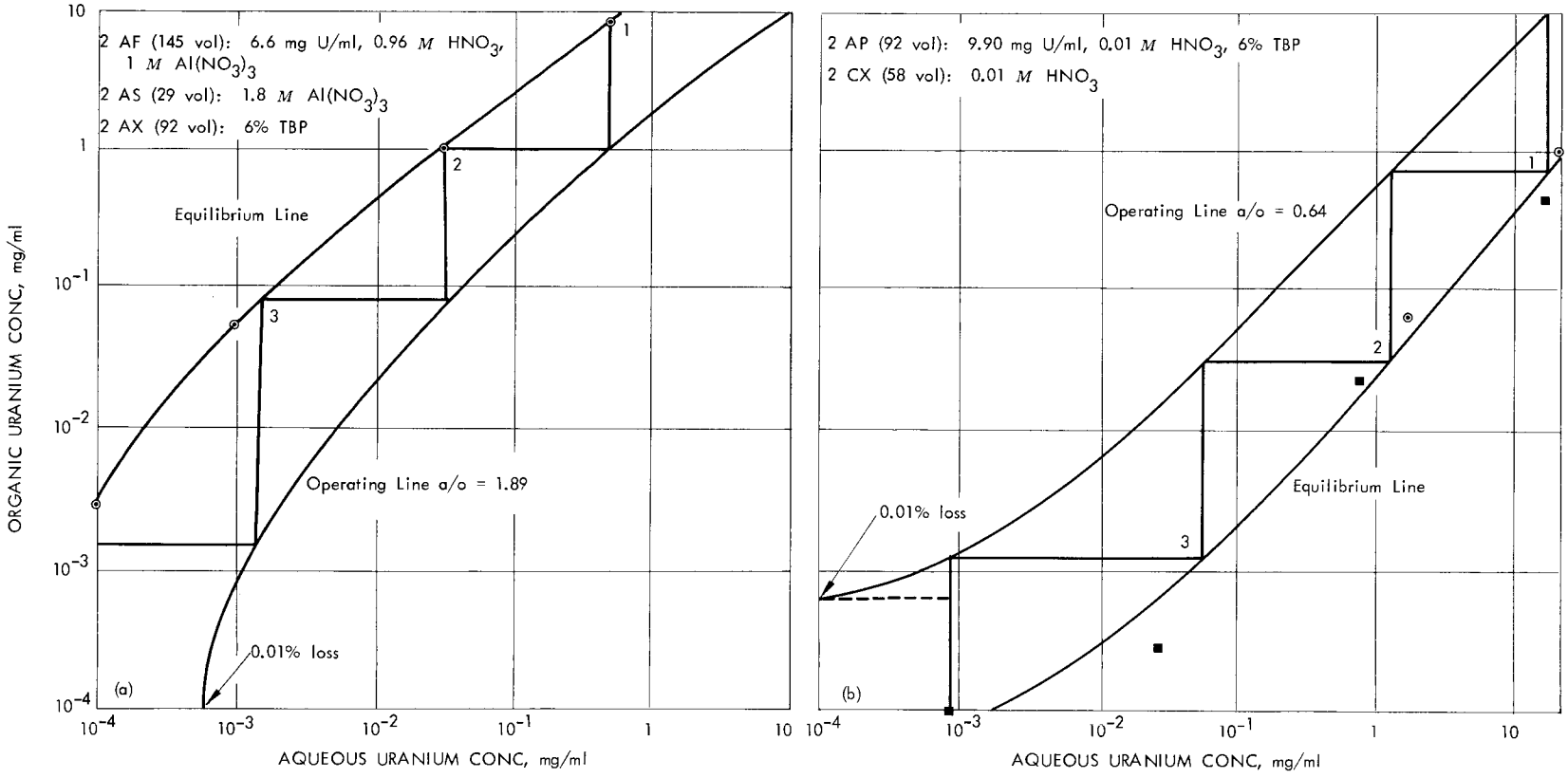

Fig. 7. McCabe-Thiele diagrams for second-cycle uranium (a) extraction and (b) stripping.

Table 9. Second Cycle Uranium Stripping Column Data

Solvent (92 vol): 9.92 mg U/ml, 0.01 M HNO_3, 6% TBP
Strip (58 vol): 0.01 M HNO_3

Stage No.	Uranium, mg/ml o	Uranium, mg/ml a	E_a^o
1	0.49	15.6	0.031
2	0.024	0.77	0.032
3	0.0003	0.03	0.01
4	0.0001	0.0009	-
5	0.0001	0.0001	-
6	0.0001	0.0001	-

Table 10. Fate of Boron in Dissolution and Feed Clarification

Sample	HNO_3, M	Concentration, mg/ml U	Concentration, mg/ml Al	Concentration, mg/ml B
Dissolvent	8.25	-	-	0.56
Dissolution product	1.49	5.75	45.5	0.57
Gelatin treated	1.49	5.75	46.5	0.59
Filtered	1.62	5.42	43.9	0.56

Malfunctioning of First Cycle Stripping Column. The question arose as to the uranium concentrations attainable in the bottom of the 1C (stripping) column if uranium-saturated 6% TBP continued to cascade into the column when the aqueous strip solution (ICX) had ceased to flow. In a series of batch equilibrations of uranium-saturated 6.4% TBP (24.5 mg U/ml) with an equal volume of aqueous solution containing 20.7 to 206 mg U/ml, some of the uranium was stripped from the organic phase under all test conditions (Fig. 8). The highest uranium distribution coefficient attained was about 0.15. In view of this fact, a system of monitors has been proposed to control the flow of aqueous and organic streams into the 1C column.[2]

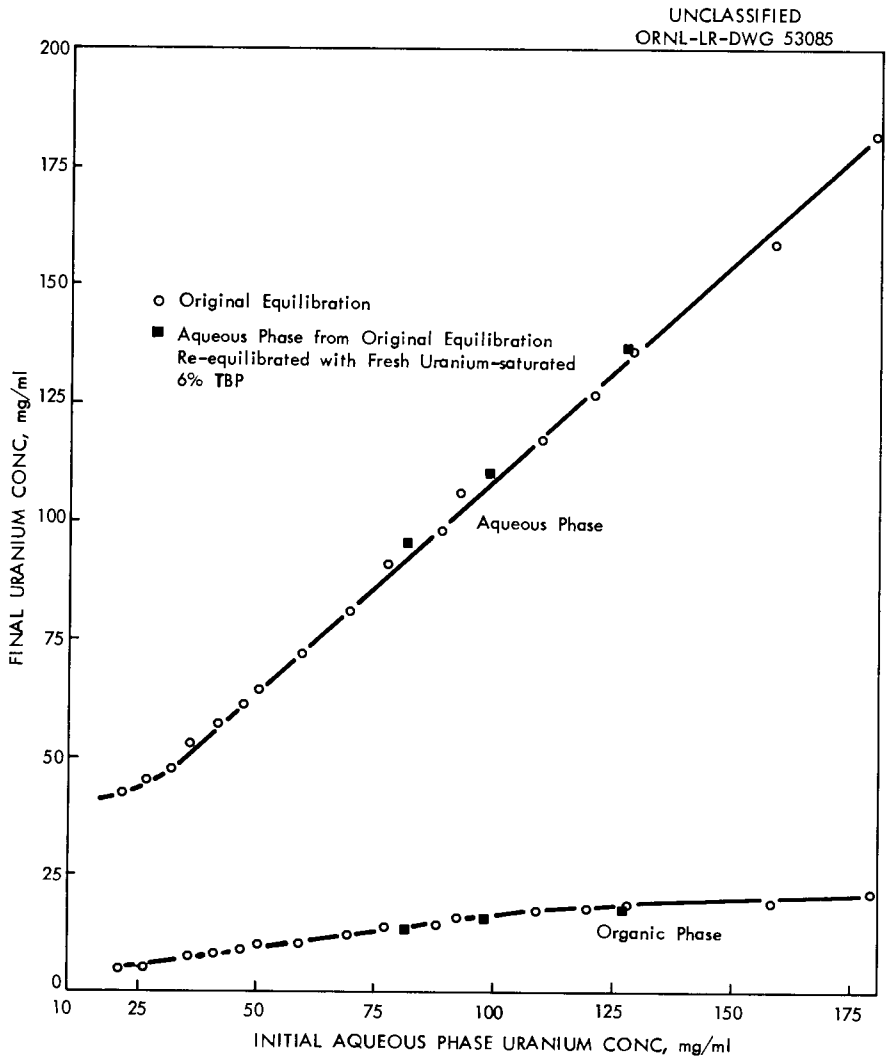

Fig. 8. Research reactor fuel processing strip column operation. Distribution of uranium between uranium-saturated 6% TBP and aqueous phases of varying uranyl nitrate concentration. Equal volumes equilibrated.

4.0 REFERENCES

1. A. R. Irvine, ORNL memo to J. R. Flanary, "PRFR-Foreign Research Reactor Fuels," March 21, 1958.

2. A. R. Irvine and J. W. Ullmann, ORNL memo to A. D. Callihan, "Request for Criticality Review of Foreign Research Reactor Fuel Reprocessing Flowsheet," May 14, 1958.

3. J. R. Flanary et al., "Chemical Development of the 25-TBP Process," ORNL-1993 (Sept. 24, 1956).

4. R. P. Wischow and R. G. Mansfield, "Laboratory Development of the Thorex Process: Progress Report, July 1, 1954 to November 30, 1955," ORNL-1994 (June 11, 1956).

5. J. H. Groh, "Removal of Silica from Solutions of Nuclear Fuels," DP-293 (June 1958).

6. A. R. Irvine, ORNL, personal communication, July 3, 1958.

7. E. L. Nicholson, ORNL memo to J. C. Bresee and R. E. Blanco, "Sand Filter and Head End Development," May 13, 1958.

8. W. J. Lee, "Fluidization Characteristics of Particulate Filter Media," ORNL-CF-58-6-78 (June 12, 1958).

9. J. R. Flanary and J. H. Goode, "Sand Filtration of Foreign Research Reactor Feed Solutions," ORNL-CF-58-10-113 (Oct. 3, 1958).

10. W. C. Thurber and R. J. Beaver, "Development of Silicon-modified 48 wt % Uranium-Aluminum Alloys for Aluminum Plate-type Fuel Element," ORNL-2602 (March 9, 1959).

11. J. W. Ullmann, ORNL, "Reactor Data Sheet - Foreign Research Reactors," July 1, 1959.

5.0 APPENDIX

A flowsheet which provides for increasing the plutonium concentration in the 1BP stream has been proposed (Fig. 9). It has not been tested.

UNCLASSIFIED
ORNL-LR-DWG 53086

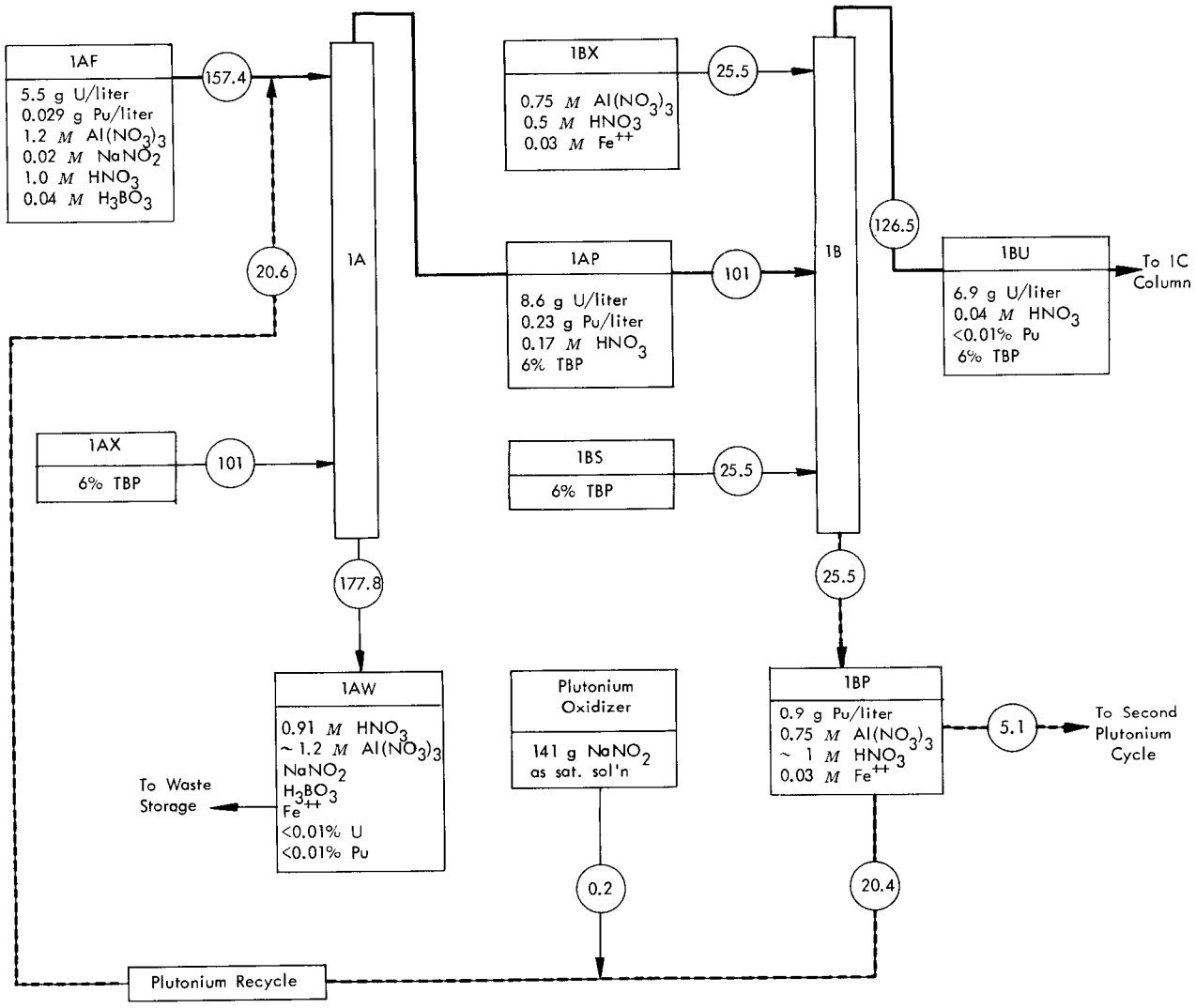

Fig. 9. Alternative first cycle flowsheet providing for plutonium concentration in processing 20% enriched uranium alloy fuel.

ORNL-2855
UC-10 - Chemical Separations Processes
for Plutonium and Uranium
TID-4500 (16th ed.)

INTERNAL DISTRIBUTION

1. Biology Library
2. Health Physics Library
3-4. Central Research Library
5. Reactor Division Library
6. ORNL - Y-12 Technical Library, Document Reference Section
7-26. Laboratory Records Department
27. Laboratory Records, ORNL R.C.
28. E. D. Arnold
29. R. E. Blanco
30. G. E. Boyd
31. J. C. Bresee
32. K. B. Brown
33. F. R. Bruce
34. C. E. Center
35. R. A. Charpie
36. R. S. Cockreham
37. Esther Cohn
38-39. F. L. Culler
40. W. K. Eister
41. D. E. Ferguson
42. J. R. Flanary
43. J. H. Frye, Jr.
44. H. E. Goeller
45. J. H. Goode
46. A. T. Gresky
47. C. E. Guthrie
48. C. W. Hancher
49. C. S. Harrill
50. A. Hollaender
51. A. S. Householder
52. R. G. Jordan (Y-12)
53. W. H. Jordan
54. C. P. Keim
55. M. T. Kelley
56. J. A. Lane
57. T. A. Lincoln
58. S. C. Lind
59. R. S. Livingston
60. K. Z. Morgan
61. J. P. Murray (K-25)
62. M. L. Nelson
63. D. Phillips
64. P. M. Reyling
65. H. E. Seagren
66. E. D. Shipley
67. M. J. Skinner
68. A. H. Snell
69. J. A. Swartout
70. E. H. Taylor
71. J. W. Ullmann
72. W. E. Unger
73. A. M. Weinberg
74. M. E. Whatley
75. C. E. Winters
76. R. G. Wymer
77. J. W. Youngblood
78. D. L. Katz (consultant)
79. I. Perlman (consultant)
80. C. E. Larson (consultant)
81. J. H. Rushton (consultant)
82. H. Worthington (consultant)
83. T. H. Pigford (consultant)

EXTERNAL DISTRIBUTION

84. Division of Research and Development, AEC, ORO
85-597. Given distribution as shown in TID-4500 (16th ed.) under Chemical Separations Processes for Plutonium and Uranium category (75 copies - OTS)