MARTIN MARIETTA ENERGY SYSTEMS LIBRARIES

3 4456 0361554 0

ORNL-3018
UC-37 - Instruments

INTERFACIAL AREA MEASUREMENT IN LIQUID-LIQUID SYSTEMS BY RADIOISOTOPES

II. THE USE OF A LIQUID SCINTILLATOR

C. V. Chester
J. S. Newman

OAK RIDGE NATIONAL LABORATORY
operated by
UNION CARBIDE CORPORATION
for the
U.S. ATOMIC ENERGY COMMISSION

Printed in USA. Price $0.50. Available from the

Office of Technical Services
Department of Commerce
Washington 25, D.C.

LEGAL NOTICE

This report was prepared as an account of Government sponsored work. Neither the United States, nor the Commission, nor any person acting on behalf of the Commission:

A. Makes any warranty or representation, expressed or implied, with respect to the accuracy, completeness, or usefulness of the information contained in this report, or that the use of any information, apparatus, method, or process disclosed in this report may not infringe privately owned rights; or

B. Assumes any liabilities with respect to the use of, or for damages resulting from the use of any information, apparatus, method, or process disclosed in this report.

As used in the above, "person acting on behalf of the Commission" includes any employee or contractor of the Commission, or employee of such contractor, to the extent that such employee or contractor of the Commission, or employee of such contractor prepares, disseminates, or provides access to, any information pursuant to his employment or contract with the Commission, or his employment with such contractor.

ORNL-3018

Contract No. W-7405-eng-26

CHEMICAL TECHNOLOGY DIVISION

Unit Operations Section

Interfacial Area Measurement in Liquid-Liquid Systems by Radioisotopes. II. The Use of a Liquid Scintillator

C. V. Chester
J. S. Newman

DATE ISSUED

JAN 19 1961

OAK RIDGE NATIONAL LABORATORY
Oak Ridge, Tennessee
Operated by
UNION CARBIDE CORPORATION
for the
U. S. Atomic Energy Commission

MARTIN MARIETTA ENERGY SYSTEMS LIBRARIES

3 4456 0361554 0

ABSTRACT

A technique for measuring interfacial area between an aqueous solution of an alpha emitter and a liquid scintillator has been devised. The short-range alpha particles produce light scintillations in the organic phase within a few microns of the liquid interface, which are detected by a photomultiplier, analyzed by appropriate pulse circuitry, and counted. A theoretical relation for extracting the interfacial area from the observed count rate was derived. In the technique it is necessary to include a light absorber to offset the scattering effects of the droplets; otherwise, the specific interfacial area would be independent of the measured count rate. In a preliminary series of experiments the interfacial area produced in a small mixer was measured and found to be proportional to the 1.6 power of the impeller speed. This technique of measuring interfacial area has the advantage of requiring very low activity levels and is amenable to rather exact mathematical analysis.

CONTENTS

		Page
1.0	Introduction	4
2.0	Theoretical Relations	4
2.1	Energy Spectrum of Alpha Particles Crossing an Interface	5
2.2	Observation of Scintillations at an Interface through an Attenuating Medium	7
2.3	Scintillation Spectrum from a Deep Source with Attenuation by Absorption and Scattering	9
3.0	Experimental Equipment	10
4.0	Results	15
4.1	Calibration	15
4.2	Count Rate vs Mixing Speed Data	17
4.3	Relation of Count Rate and Specific Interfacial Area	17
4.4	Calculated Specific Interfacial Area and the Weber Number	19
4.5	Photographic Checks	19
5.0	References	19
6.0	Appendix	21
6.1	Nomenclature	21
6.2	Data and Calculations	23

1.0 INTRODUCTION

A method of rapidly measuring the interfacial area between an aqueous solution of an alpha emitter and an organic phase containing a liquid scintillator is described here. Measurement of interfacial area is important to the study of mass transfer operations, as the rate of transfer is proportional to the area across which the transfer takes place. However, the traditional method in liquid-liquid systems—high-speed photography—is tedious and difficult because drop size and number must be determined by hand from photographs. The successful analysis and application of the liquid scintillator technique to interfacial area determinations in a small mixer show a way the mass-transfer researcher can be relieved of the onerous task of drop counting in photographs.

Any measurement of interfacial area must rely on some phenomenon that is restricted to the interface and preferably dependent only on the interfacial area and not on the properties of the adjacent phases. Mass-transfer methods of measuring interfacial area are dependent on the diffusivity of the detecting species entering the adjacent phases. Radioisotopes that emit short-range particles are applicable to the measurement of interfacial area. Since the concentration of the emitting species does not change over a short experimental time, the rate of emission is independent of both the time and the distance from the interface. The technique is to have the short-range particles emitted in one phase and a radiation-sensitive material in the other phase.

Recently an attempt to apply radioisotopes for the measurement of interfacial area was made at Oak Ridge National Laboratory. A chemical-dosimetry method was unsuccessful,[1] and a method using an (α,n) reaction was successful but of doubtful practicality.[2] The use of a liquid scintillator described here was suggested by one of the authors in an attempt to get more information from particles crossing the interface.[3]

The authors gratefully acknowledge the stimulating criticism of M. E. Whatley in the preparation of this report.

2.0 THEORETICAL RELATIONS

The use of light as the detected radiation from the interfaces suffers from the complication that the light is attenuated by scattering at the interface due to the different indices of refraction of the phases. This attenuation is proportional to the specific interfacial area. For a sufficiently deep solution an increase in the specific interfacial area increases the light attenuation by scattering so as to exactly (theoretically) cancel the effect of the increased light production. As a result the net light output by the dispersion is independent of the specific interfacial area. However, if something is placed in the solution which attenuates the light differently from scattering at an interface, an equation is obtained which is not independent of interfacial area. In the system used the absorber was the uranyl ion, which also provided the alpha source. If the solution is sufficiently concentrated in uranium, the attenuation will depend largely on the uranyl concentration and will be independent of specific interfacial area. In this case the count rate is linearly proportional to the interfacial area.

Since in any real system the light output from a dispersion of an alpha source and a liquid scintillator is highly nonlinear, the practicability of the method is dependent to a considerable degree on the ability of analyzing the system mathematically, of predicting the nonlinearities and correcting for them, and of being able to determine the interfacial area from the count rate data. The relations between count rate, the specific interfacial area, the instrument parameters, and alpha energies are not obvious. These relations are derived here for pertinent experimental configurations.

2.1 Energy Spectrum of Alpha Particles Crossing an Interface

The frequency of alpha particles as a function of their energy in crossing the aqueous-organic interface must be found. The fraction of alpha particles from a differential source SA dy traveling between r and r + dr to get to the interface is (Fig. 2.1)

$$\frac{2\pi r\ d\theta}{4\pi r^2} = \frac{y\ dr}{2r^2} \tag{1}$$

Integration of this expression along y from 0 to r gives the expression for the frequency function of the number of particles per unit time crossing an interface with a range r (cm) lying in an interval dr about r, N(r):

$$N(r) = \int_0^r \frac{SA\ y\ dy}{2r^2} = \frac{SA}{4} \tag{2}$$

where S = volume source strength, dis min^{-1} cm^{-3}

A = area of the interface, cm^2

The relation between energy loss and distance traveled in water has been found empirically[4] to be well represented[2] by

$$\frac{dr}{dE} = -\ (2ME + L) \tag{3}$$

where E = energy of the alpha particle, Mev

$2M = 1.7 \times 10^{-4}$ cm Mev^{-2}

$L = 2.6 \times 10^{-4}$ cm Mev^{-1}

If N(E) is the energy frequency function, then

$$N(E)dE = N(r)\ \frac{dr}{dE}\ dE \tag{4}$$

The total number of alpha particles, N, crossing the interface per unit time with energies lying in the closed interval between E and E_o is

UNCLASSIFIED
ORNL-LR-DWG. 54673

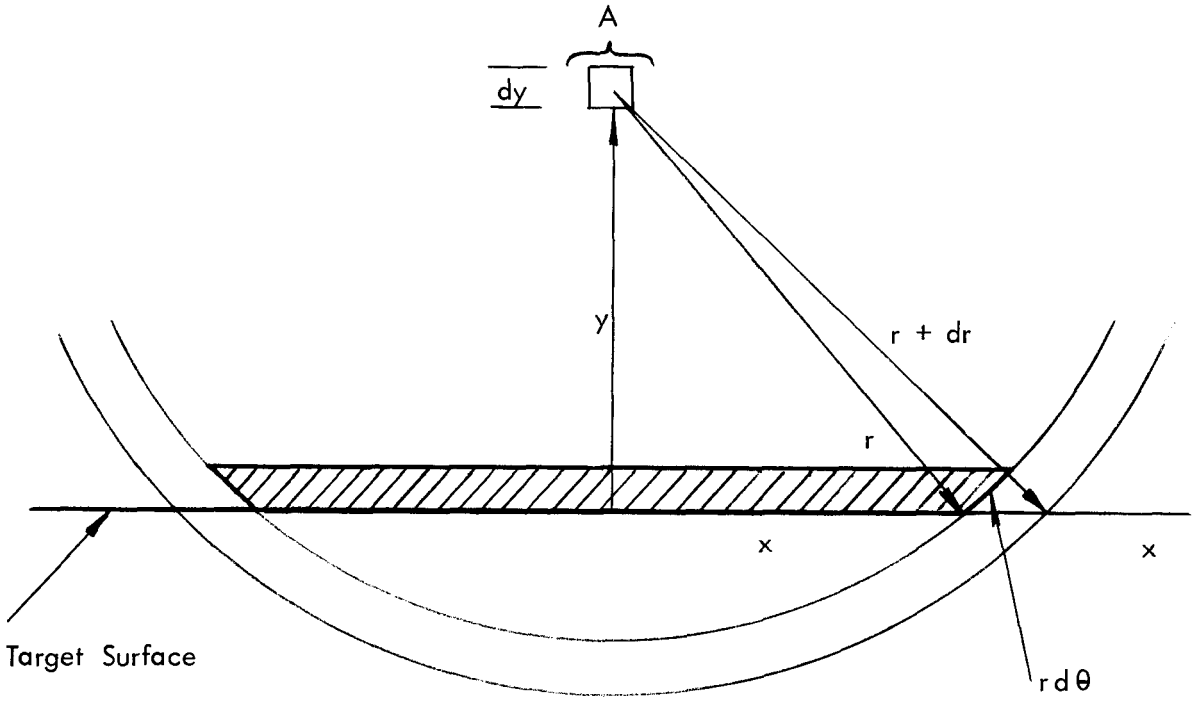

Fig. 2.1. Calculation of fraction of particles from a bulk source having a range between r and r + dr. By similar triangles, $r\,d\theta/y = dr/x$ or $x r d\theta = y\,dr$.

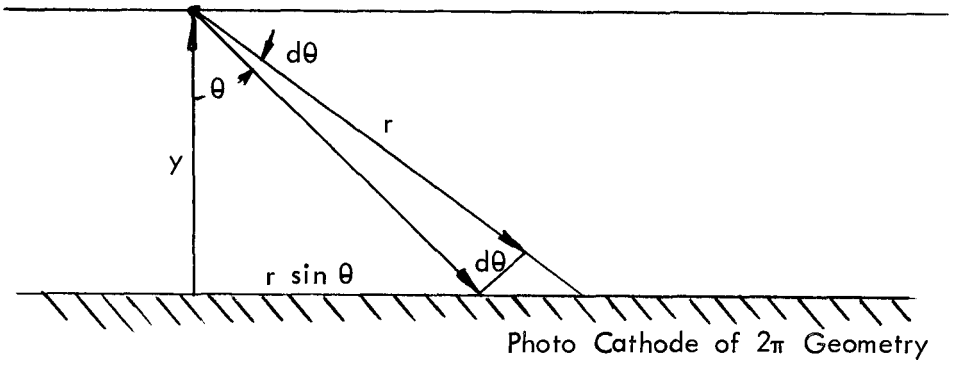

Fraction of observable KE_y lying in $d\theta$ is

$$\frac{2\pi\, r \sin\theta\, r\, d\theta}{2\pi\, r^2} = \sin\theta\, d\theta$$

Energy reaching photo cathode is

$$\sin\theta\, e^{-\mu r}\, d\theta = -e^{\frac{\mu y}{\cos\theta}}\, d(\cos\theta)$$

Fig. 2.2. Interface observed through attenuating medium.

$$N = \int_{E_o}^{E} N(E)dE = \frac{SA}{4} \int_{E}^{E_o} (L + 2ME)\ dE \qquad (5)$$

2.2 Observation of Scintillations at an Interface through an Attenuating Medium

Let KE_y be the energy of a scintillation occurring near an interface at a distance y into a medium of attenuation $e^{-\mu r}$, if y is sufficiently small that an observing photocathode has essentially a 2π view of the interface, then the energy from KE_y reaching the photocathode is (Fig. 2.2)

$$KE = KE_y \int_{o}^{\pi/2} e^{-\mu r} \sin\theta \ d\theta = KE_y \int_{o}^{\pi/2} e^{-\frac{\mu y}{\cos\theta}} d(-\cos\theta) \qquad (6)$$

Making the substitution

$$1/t = \cos\theta \qquad (7)$$

and integrating eq. 5 by parts once, gives

$$E/E_y \equiv g(\mu y) = e^{-\mu y} - \mu y \int_{1}^{\infty} \frac{1}{t} e^{-\mu y t}\ dt = e^{-\mu y} - \mu y[-E_i(-\mu y)] \qquad (8)$$

where $-E_i(-\mu y)$ = tabulated exponential integral. The quantity $g(\mu y)$ is plotted against μy in Fig. 2.3. A plot of $e^{-\mu y}$ is included for comparison.

Let KE_p be the minimum energy of an unattenuated scintillation due to an alpha particle of energy E_p, which will be detected and counted by the electronic system. In order to be detected, a scintillation of energy KE_y occurring at a distance y from the photocathode must satisfy the relation

$$KE_y \geqslant \frac{KE_p}{g(\mu y)} \qquad (9)$$

Then $E_p/g(\mu y)$, being the energy of the least energetic alpha particle crossing the interface to produce a countable scintillation, is the lower limit of the integral in eq. 5. Equation 5 becomes

$$N = \frac{SA}{4} \int_{E_p/g(\mu y)}^{E_o} (L + 2ME)\ dE = \frac{SA}{4} \left\{ M \left[E_o^2 - \left(\frac{E_p}{g(\mu y)} \right)^2 \right] + L \left[E_o - \frac{E_p}{g(\mu y)} \right] \right\} \qquad (10)$$

UNCLASSIFIED
ORNL-LR-DWG 52349

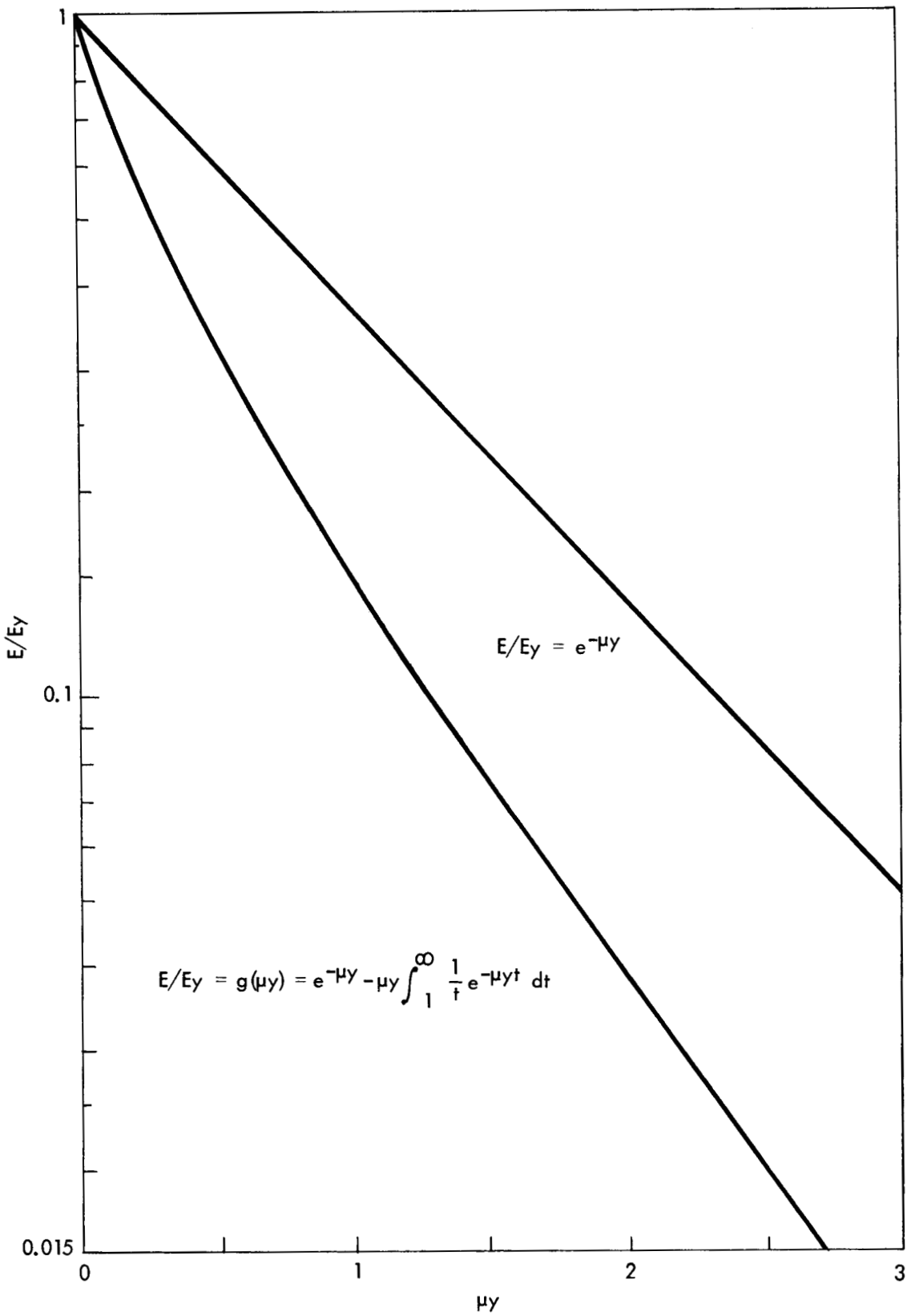

Fig. 2.3. Plot of g(μy) vs μy.

From eq. 10, a relation between E_p and the pulse height selector setting may be obtained. If a plane interface is floated a distance y above the photocathode on a medium of attenuation μ, and the setting is adjusted to just make the net count rate go zero, then at this point $(N \rightarrow 0^+)$

$$E_o = E_p/g(\mu y) \tag{11}$$

A uranium solution, containing no dispersed organic phase, has an attenuation given by

$$\mu = BC_A \tag{12}$$

where B = molar absorption coefficient of UO_2^{++}

C_A = concentration of UO_2^{++}

The pulse height-to-gain ratio, PHS/gain, is proportional to the scintillation energy for a given geometry. Assuming that the scintillation energy is proportional to the alpha energy (K of eq. 6 is constant) over the range of interest, PHS/gain is proportional to E_p. The proportionality constant may be determined by dividing the PHS/gain for eq. 11 by the E_p calculated from eq. 11.

2.3 Scintillation Spectrum from a Deep Source with Attenuation by Absorption and Scattering

The equation for the scintillation spectrum from a volume source of specific interfacial area may be obtained by substituting the differential area aAdy for the area A in eq. 10. Since μ is constant for any one measurement and is independent of y, the variable of integration may be changed to μy to simplify numerical calculations:

$$N = \frac{SAa}{4\mu} \int_{o}^{\mu y_{max}} \int_{E_p/g(\mu y)}^{E_o} (L + 2ME)\, dE\, d(\mu y) \tag{13}$$

or

$$N = \frac{SAa}{4\mu} \int_{o}^{\mu y_{max}} \left\{ M \left[E_o^2 - \left(\frac{E_p}{g(\mu y)} \right)^2 \right] + L \left[E_o - \frac{E_p}{g(\mu y)} \right] \right\} d(\mu y) \tag{14}$$

The upper limit on the integral in eqs. 13 and 14, μy_{max}, is the value of μy in $g(\mu y)$ to just make the integrand go to zero:

$$g(\mu y_{max}) = E_p/E_o \tag{15}$$

The integral in eq. 14 is then a function only of E_p and E_o, which shall be defined as F(E). The integrand of eq. 14 is plotted against the integrator for several values of E_p in Fig. 2.4. In all these calculations E_o is taken as 4.18 Mev, the energy of the U^{238} alpha particle. The quantity F(E) is plotted against E_p in Fig. 2.5 a and b.

In eq. 14 the quantity μ is the sum of the attenuation by scattering and by absorption:

$$\mu = \alpha a + BX\,C_A \tag{16}$$

where α = scattering factor

X = volume fraction of aqueous phase in the dispersion

The equation for count rate as a function of interfacial area is

$$N = \frac{SA\ F(E)\ a}{4(\alpha a + BXC_A)} \tag{17}$$

and the inverse is

$$a = \frac{4BXC_A N}{SA\ F(E) - 4N\alpha} \tag{18}$$

3.0 EXPERIMENTAL EQUIPMENT

In the work done, the aqueous phase contained uranyl nitrate (100 g of uranium per liter); the organic phase was phenylcyclohexane which contained trans-stilbene (5 g/liter) as the primary scintillant.

A 2-1/16-in.-i.d. stainless steel vessel (Fig. 3.1) was fabricated for use as a mixing vessel, with provision for sealing out light. The bottom of the vessel contained a Pyrex window. The photomultiplier tube housing screwed into the bottom of the vessel. A Lucite disk and 200 series Dow Corning fluid (2.5 million centistokes) provided optical coupling between the Pyrex window and the photomultiplier cathode.

The photomultiplier tube used was a DuMont 6292 operated with a negative high voltage applied to the cathode (Fig. 3.2). The area of the photocathode was 14.42 cm^2. A stabilized negative high voltage supply (Atomic 312) was used. An RCA 6199 tube using a positive high voltage applied to the anode was tried, but this system was much noisier.

The output of the photomultiplier tube was amplified by a DD2 preamplifier and then by a DD2 linear amplifier (Fig. 3.3). The output of the amplifier included provision for selecting the pulse height. It might either cut out all pulses below a selected pulse height (integral counting) or cut out all pulses except those between two selected pulse heights (differential counting). Pulses that passed the selector were further amplified and clipped to about 26 volts. The amplifier output was counted by a 64-scaler-counter. A Sola voltage-regulating transformer was used to stabilize the voltage supplied to the amplifier. Figure 3.4 shows the disassembled photomultiplier housing and mixing vessel.

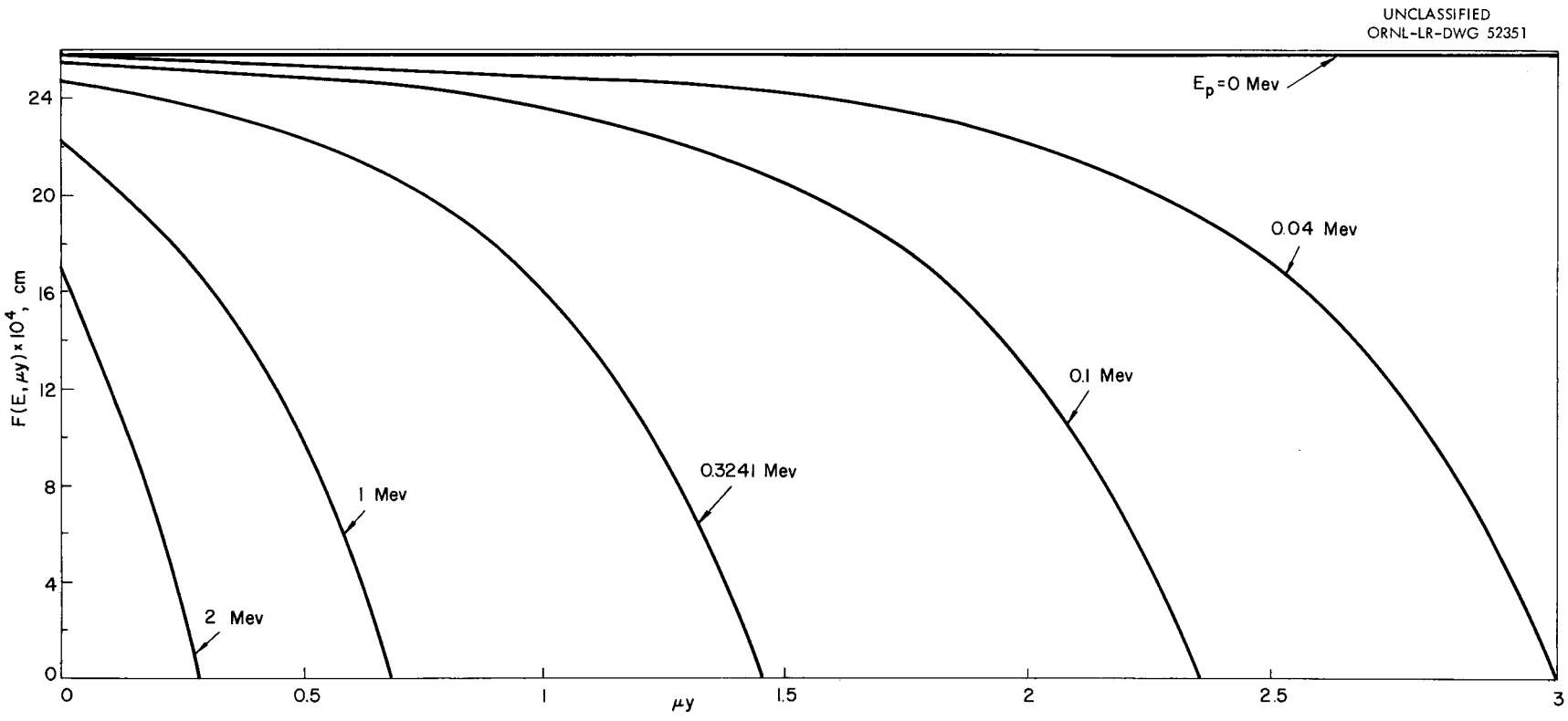

Fig. 2.4. F(E, μy) vs μy for various values of E_p. $F(E, \mu y) = M\left[E_o^2 - E_p^2 \frac{1}{g(\mu y)}^2\right] + L\left[E_o - E_p \frac{1}{g(\mu y)}\right]$, where $g(\mu y) = \int_1^\infty \frac{e^{-\mu y t}}{t^2} dt$; where $M = 0.85 \times 10^{-4}$ cm Mev^{-2}; $L = 2.6 \times 10^{-4}$ cm Mev^{-1}; $E_o = 4.18$ Mev.

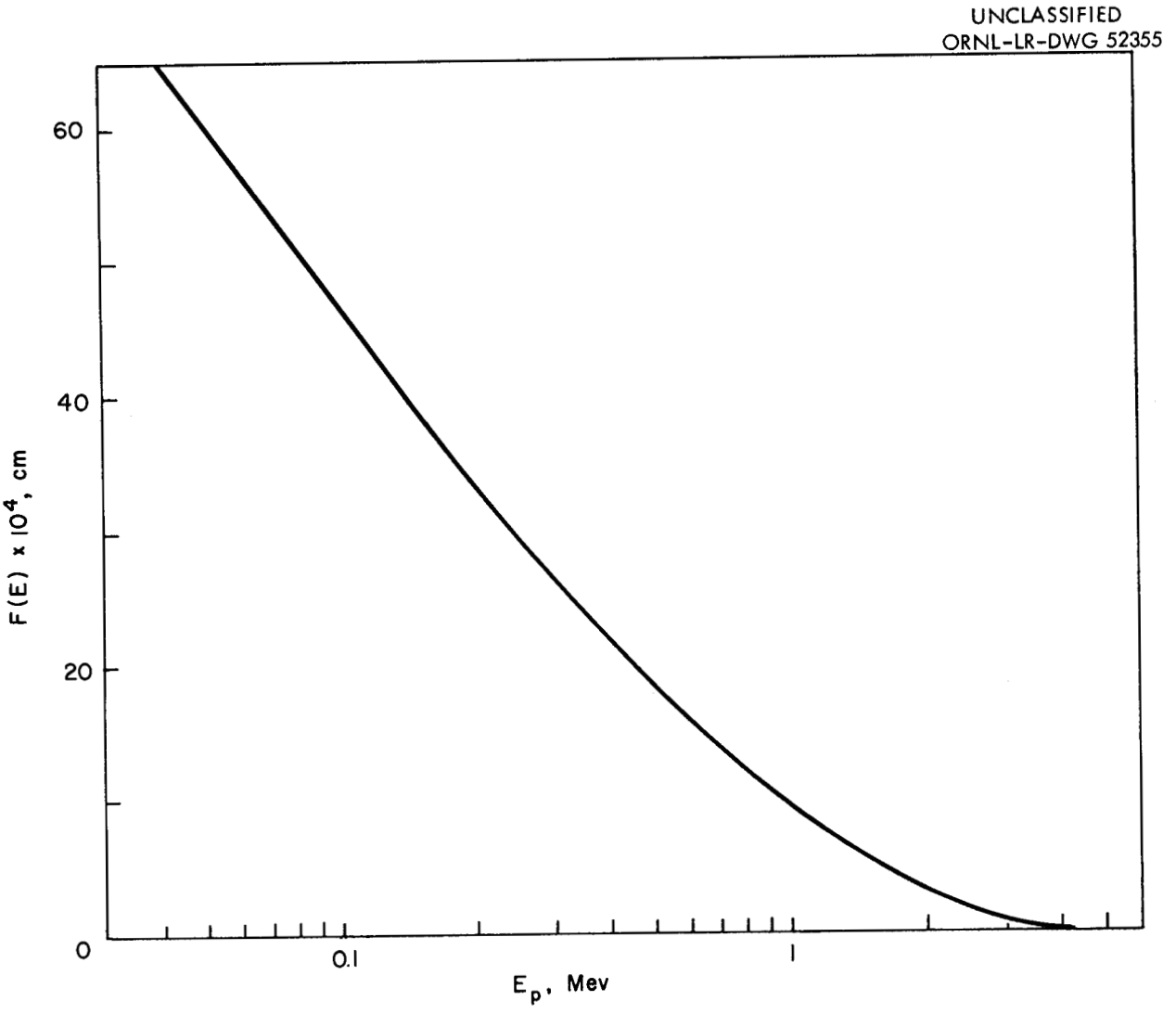

Fig. 2.5. Semilogarithmic plot of F(E) vs E_p.

$$F(E) = \int_0^{\mu y_{max}} \left\{ M \left[E_o^2 - E_p^2 \left(\frac{1}{g(\mu y)} \right)^2 \right] + L \left[E_o - E_p \frac{1}{g(\mu y)} \right] \right\} d(\mu y)$$

where $g(\mu y) = \int_1^{\infty} \frac{e^{-\mu y t}}{t^2} dt$; $\mu y_{max} = \mu y$ for which $g(\mu y) = E_p/E_o$

$M = 0.85 \times 10^{-4}$ cm Mev^{-2}; $L = 2.6 \times 10^{-4}$ cm Mev^{-1}; $E_o = 4.18$ Mev

UNCLASSIFIED
ORNL-LR-DWG 32501

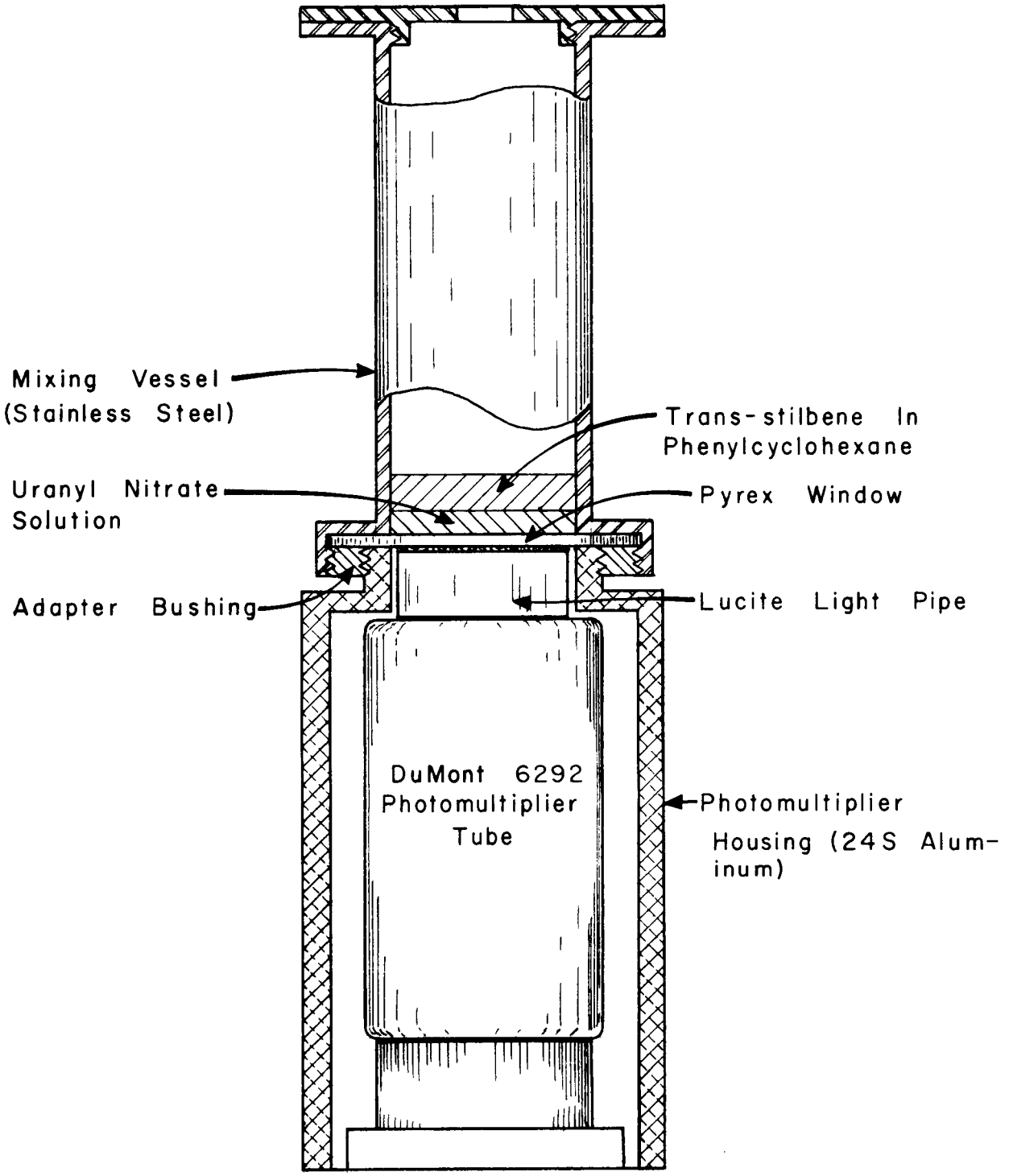

Fig 3.1 Photomultiplier tube and mixing vessel for liquid scintillator experiments

UNCLASSIFIED
ORNL-LR-DWG 32499

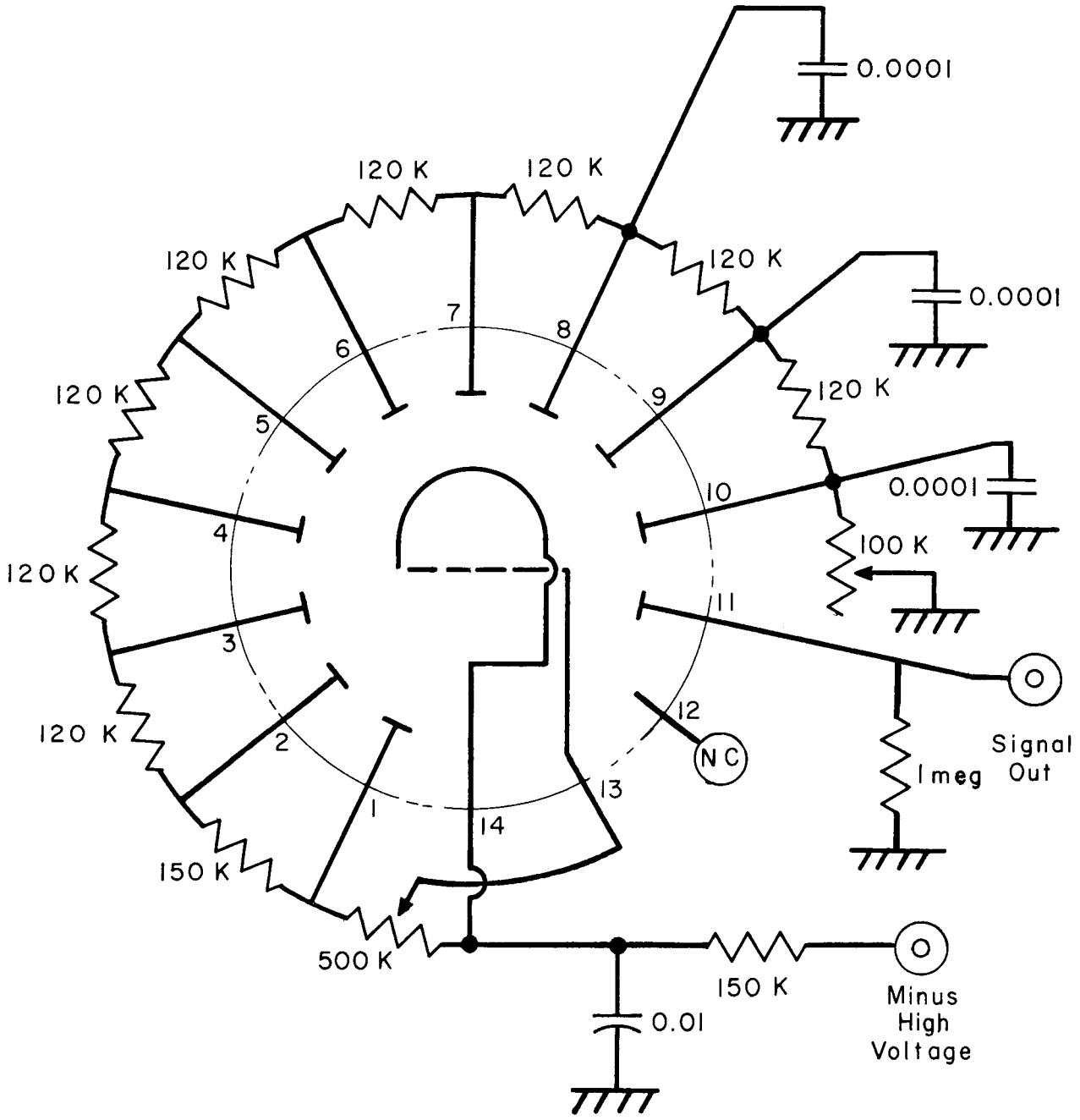

Fig 3.2. Voltage divider network for DuMont 6292 photomultiplier tube.

UNCLASSIFIED
ORNL-LR-DWG. 54674

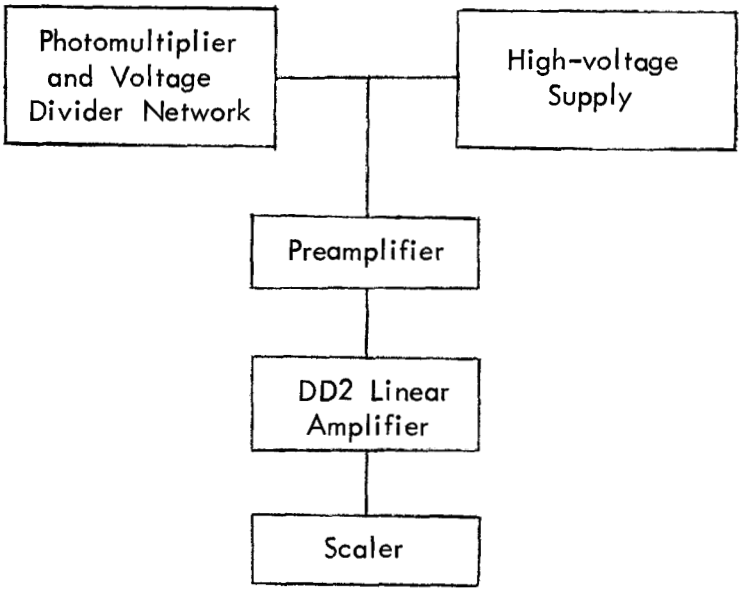

Fig. 3.3. Liquid scintillator instrumentation.

In the mixing experiment a 1-in. four-blade flat-blade turbine impeller fabricated of fused quartz was used. The impeller was driven by a variable-speed Bodine motor, with which the impeller speed could be varied continuously from 0 to about 4000 rpm.

4.0 RESULTS

Despite very careful grooming of the electronic equipment, the noise level in the amplifier was appreciable compared to the experimentally obtained count rates. The electronic equipment was extremely sensitive to moisture.

Liquid scintillators have a rather low light output compared to other scintillators, e.g. sodium iodide crystals. To count an appreciable fraction of the scintillations, the pulse height selector had to be set low so that rather large noise rates had to be subtracted from all the experimentally obtained gross counts. Additional background from the gamma radiation of the uranyl nitrate solution alone gave a count rate about three times that of the electronic noise level with the pulse height selector setting used. Apparently the photocathode is slightly gamma sensitive.

4.1 Calibration

To determine the proportionality constant between the alpha energy and the pulse height output of the amplifier, an experiment was performed in which a static interface was produced over the photocathode by floating the liquid scintillator on about a 2-mm layer of the uranyl nitrate solution. A series of count rates was obtained at various PHS/gain ratios and the curve extrapolated

UNCLASSIFIED
PHOTO 44888

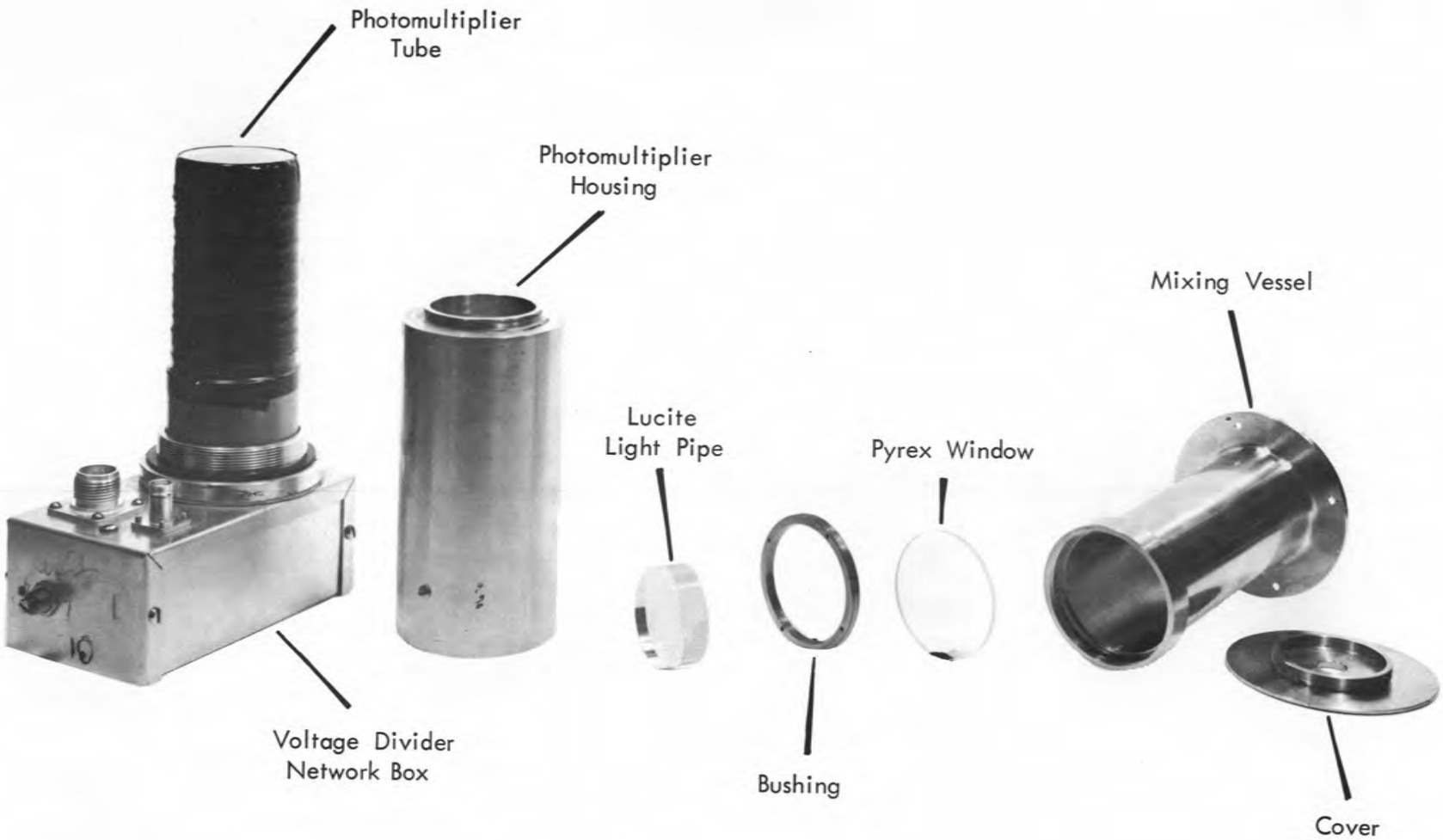

Fig. 3.4. Liquid scintillator apparatus disassembled.

to zero net count rate. At this point the PHS/gain is exactly proportional to the maximum value of the alpha energy, attenuated by a 2-mm layer of the aqueous uranyl solution:

$$E_p \ (N \rightarrow 0^+) = E_o g(\mu y) \tag{19}$$

This value of the alpha energy corresponds to the PHS/gain ratio of 0.21 volt (Fig. 4.1). With 0.185 cm depth of a solution 0.441 M in uranyl nitrate, the attenuation factor, $g(\mu y)$, was 0.0762. From eq. 4, E_p corresponds to 0.32 Mev at a PH/gain ratio of 0.21 volt. From this value of E_p and the relation between F(E) and E_p given in Fig. 2.5b, the value of F(E) applicable in this series of experiments can be obtained. This is 25.9×10^{-4} cm.

4.2 Count Rate vs Mixing Speed Data

When the net count rate due to mixing is plotted against the impeller speed on logarithmic paper, two curves are clearly visible (Fig. 4.2). This result, which at first was somewhat surprising, was explained by the later observation of air bubbles in the dispersion at higher impeller speeds. As the impeller speed was increased beyond approximately 1000 rpm, air was drawn into the dispersion which caused a decrease in the count rate. Experiments performed after mixing at the high impeller speeds, without stopping the impeller, gave data which lay on the second curve at speeds as low as 600 rpm. This was due to the fact that the air bubbles once in the dispersion were very slow to come out of the relatively viscous organic phase. This behavior and the existance of asymptotic upper limits of the curves might be predicted from the inspection of eq. 17,

$$N = \frac{SA \ F(E) \ a}{4(\alpha a + BXC_A)}$$

As the dispersion term, αa, in the denominator becomes much greater than the attenuation term, BXC_A, the specific interfacial area, a, has less and less effect on the count rate, so that when the dispersion term becomes very large, a has no effect at all. This indicates the existence of an asymptote whose ordinate would be given by

$$\lim_{W \rightarrow \infty} N = \frac{SA \ F(E)}{4\alpha} \tag{20}$$

4.3 Relation of Count Rate and Specific Interfacial Area

Extrapolation of the curves of Fig. 4.2 to their asymptotic values permits the calculation of α from relation 20, since all other terms in the relation are known. Two distinct values of α are obtained as expected: 0.0251 (air-free) and 0.0578 (air in dispersion). The value for an air-free dispersion, 0.10, is a factor of 4 lower than α calculated by the correlation of Rodger.[4] This is probably due to the geometry of the system. Rodger's α's were obtained assuming a long column geometry and essentially no buildup. In this system light once scattered has a very good probability of scattering back into the photocathode, which would produce less attenuation than

UNCLASSIFIED
ORNL-LR-DWG 52348

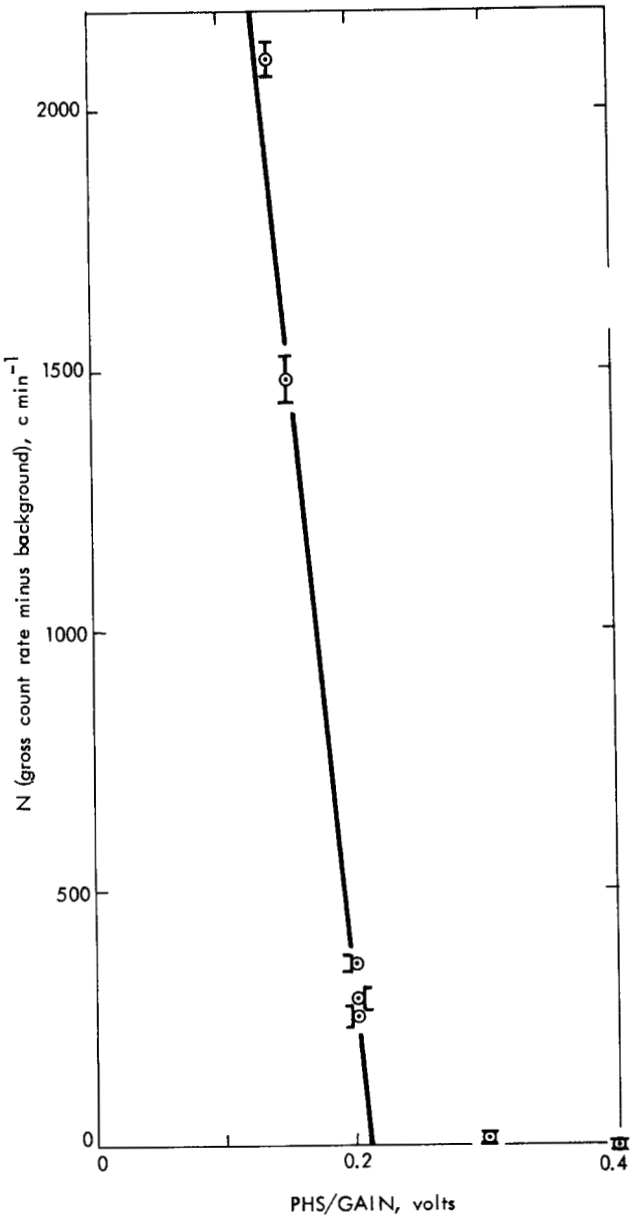

Fig. 4.1. Calibration data for system electronics; 4 ml each of aqueous and organic phases, tube voltage, 1009 volts, integral counting.

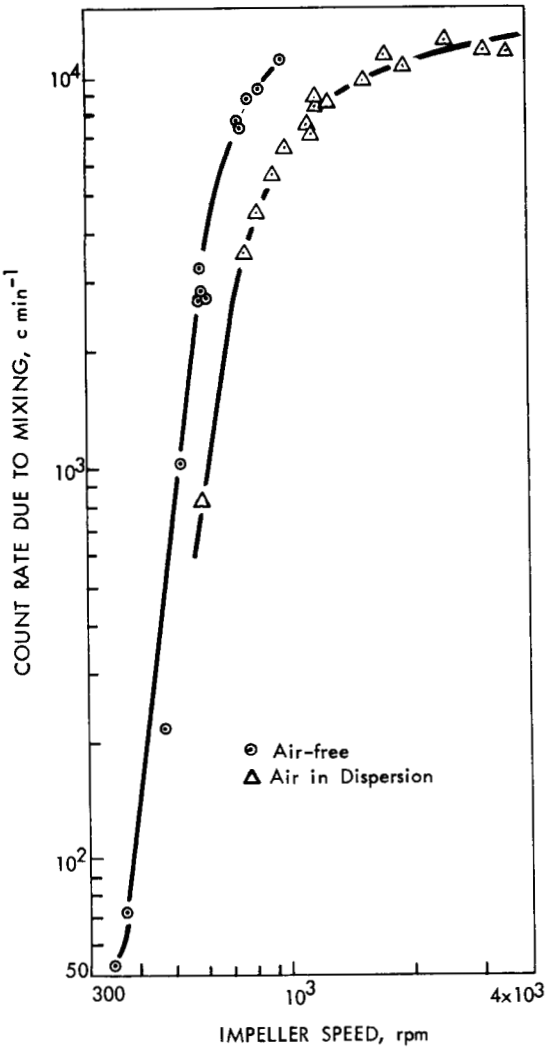

Fig. 4.2. Count rate due to mixing as a function of impeller speed.

would be expected in a long column and hence smaller values of α. Substituting these derived values of α and the other known parameters of the system into eq. 18 gives an expression for the interfacial area a in terms of the count rate N for each value of α:

$$a = \frac{3.949\ N}{751.7 - 0.0251\ N} \quad \text{(air free)} \qquad (21)$$

$$a = \frac{3.949\ N}{751.7 - 0.0578\ N} \quad \text{(air in dispersion)} \qquad (22)$$

4.4 Calculated Specific Interfacial Area and the Weber Number

The values of the specific interfacial area calculated by relations 21 and 22 are plotted against the Weber number in Fig. 4.3. At the higher end the curve has a straight portion with a slope of 0.8, which is somewhat greater than that obtained by other investigators.[5,6] The values of specific interfacial area are reasonable for the Weber numbers in the straight portion of the curve. The data, although meager, seem somewhat scattered at the high end, as might be expected in the vicinity of the asymptote in Fig. 4.2. At a Weber number of about 100, the curve appears to break sharply, and the slope is much higher at Weber numbers below 100 than above. This is believed to be due to incomplete mixing of the organic and aqueous phases near the bottom of the vessel. Since the maximum depth observed by the photocathode, due to attenuation by the uranium ion, is only 2 or 3 mm, rather vigorous agitation would be expected to be necessary to extend the uniform dispersion to the bottom of the vessel. This difficulty can be circumvented in future experiments by mounting the photomultiplier against the side of the vessel, probably opposite the impeller.

4.5 Photographic Checks

A series of photographic checks of the system used was made by Donahue, Davis, and Friedman.[7] They photographed the dispersion produced in a 2-in. mixer, using the same solutions as those used in the liquid scintillator studies. The photographs were taken from the bottom of the mixer, getting the same view as the photocathode.

The photographs verified the section of the curve below the knee (Fig. 4.3), but unfortunately the available stroboscopic flash did not have the speed required to resolve drops at Weber numbers greater than 100.

5.0 REFERENCES

1. D. T. Morgan, "Interfacial Area by Alpha or Beta Dosimetry - A Feasibility Study," ORNL CF-56-9-133 (1956).

2. C. V. Chester et al., "Interfacial Area Measurement by Radioisotopes: I. The Use of an (α,n) Reaction," ORNL-2503 (to be published).

3. C. V. Chester, "Interfacial Area Measurement by Liquid Scintillators," in Unit Operations Section Monthly Status Report for March 1958, ORNL CF 58-3-71 (internal memo).

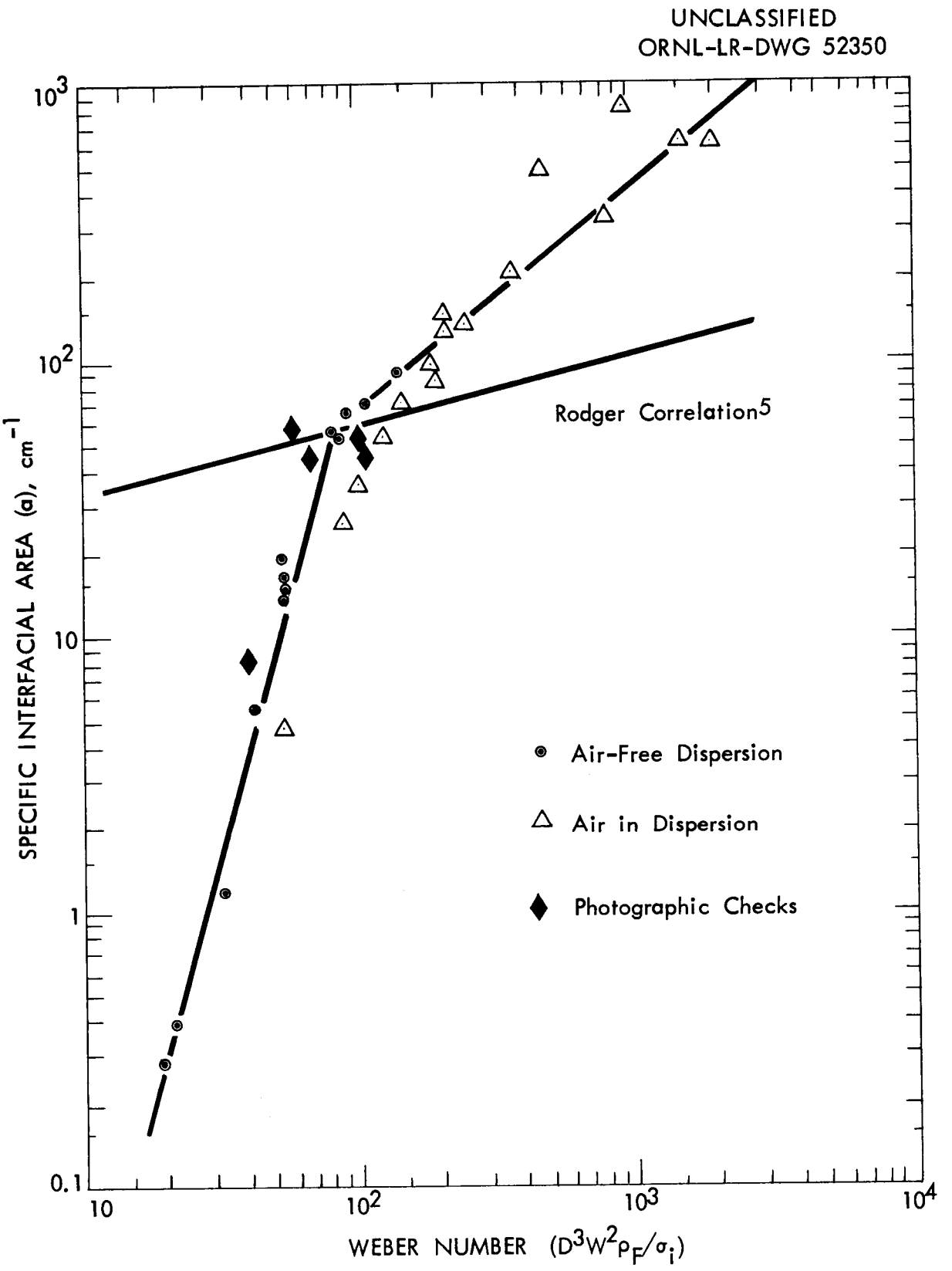

Fig. 4.3. Specific interfacial area calculated from photomultiplier response.

4. M. Bogaardt, "Calculation of Range/Energy Relations Especially in Photographic Emulsions," Ph. D. Thesis, University of Utrecht, July 9, 1956.

5. W. A. Rodger, "Interfacial Area in Liquid-Liquid Dispersions Related to Fluid Motion in Mixing Vessels," ANL-5575 (1956).

6. G. E. Langlois, J. E. Gulberg, and T. Vermeulen, "Interfacial Area in Liquid-Liquid and Gas Liquid Agitation," Chem. Engr. Progr., 51: 81F (1955).

7. J. E. Donahue, L. M. Davis, and M. R. Friedman, "Measurement of Interfacial Area," KT-388 (1959).

6.0 APPENDIX

6.1 Nomenclature

A = area of photocathode

a = specific interfacial area, $cm^2\ cm^{-3}$

B = molar absorption coefficient of UO_2^{++}

C_A = concentration of uranyl ion in aqueous phase

E = energy of alpha particle entering organic phase

$-E_i(-\mu y)$ = tabulated exponential integral

E_o = energy of emitted alpha particle = 4.18 Mev for U^{238}

E_p = energy of alpha particle producing minimum scintillation counted

E_y = energy of alpha particle crossing an interface a distance y from photocathode

$$F(E) = \int_{o}^{\mu y(max)} \int_{E_p/g(\mu y)}^{E_o} (L + 2ME)\, dE\, dy$$

$$g(\mu y) = e^{-\mu y} - \mu y \int_{1}^{\infty} \frac{e^{-\mu y t}\, dt}{t}$$

K = ratio of scintillation energy to alpha energy

L = empirical constant, 2.6×10^{-4} cm Mev^{-1}

M = empirical constant, 0.85×10^{-4} cm Mev^{-2}

N = count rate, c min^{-1}

N(r) = frequency function of alpha particles crossing the interface in an interval dr about a range r

N(E) = frequency function of alpha particles crossing the interface in an interval dE about an energy E

R = path length of light from scintillation to photocathode

r = path length of alpha particle from emission to interface

S = source strength of alpha particles, dis min^{-1} cm^{-3}

W = impeller speed, rpm

X = volume fraction aqueous in dispersion

y = normal distance into emulsion, cm

α = scattering factor of interfacial area

μ = total absorbency of emulsion or solution

6.2 Data and Calculations

Properties of Aqueous Phase

Solvent: demineralized water

Solute: uranyl nitrate

Concentration: 104.8 g of uranium per liter

Index of refraction: 1.34727

Specific absorbtivity of uranyl ion for light at 4200 A: 18.04 $cm^{-1}/mole^{-1}$ $liter^{-1}$

Density: 1.071 g cm^{-3}

Properties of Organic Phase

Solvent: phenylcyclohexane

Solute: trans-stilbene

Uranium concentration: 4.95 g $liter^{-1}$

Index of refraction: 1.52522

Calculated scattering factor, α[5]: 0.10

Interfacial tension, σ_i: 32.72 dynes cm^{-1}

Table 6.1. Calibration Data

Photocathode dia: 1-11/16 in.
Tank dia: 2-1/16 in.
Depth of aqueous phase: 4 cm^3/21.6 cm^2
= 0.185 cm
Photomultiplier voltage: 1009 volts

Counts ÷ 64	Counting Time, min	Count Rate, counts min^{-1}				Amplifier Gain	PHS Setting volts	PHS/gain volts	Volume, cm^{-3}	
		Gross	Uncertainty	Net	Uncertainty				Aqueous Phase	Organic Phase
2.11	3.2	42.2	3.63	-	-	50	20	-	4	0
41.81	3.2	836.2	16.15	-	-	50	10	-	4	0
476.03	3.2	9520.6	54.6	-	-	50	5	-	4	0
180.72	3.2	3614.4	33.6	-	-	50	7	-	4	0
1256.30	14	5710	20.24	2095.6	39.2	50	7	0.14	4	4
166.67	9	1183	11.45	346.8	19.86	50	10	0.20	4	4
2.66	4	42.5	3.263	0.3	4.89	50	20	0.40	4	4
69.55	3.2	1391.0	20.85	251.0	26.82	100	20	0.20	4	4
164.66	3.2	3293.2	32.08	-	-	100	15	-	4	0
50.70	3.2	1140.0	17.80	-	-	100	20	-	4	0
7.375	3.2	147.5	6.79	-	-	100	30	-	4	0
71.36	3.2	1427.2	21.1	287.0	27.60	100	20	0.20	4	4
16.69	6.4	166.9	5.104	20.0	8.50	100	30	0.30	4	4
238.75	3.2	4775.0	38.6	1481.8	50.2	100	15	0.15	4	4

Table 6.2. Mixing Data - Notes

System: phenylcylohexane and water
Tank dia: 2-1/16 in.
Number of baffles: 1
Baffle width: 3/8 in.
Impeller type: four-blade flat-blade turbine fabricated of fused quartz
Impeller dia: 1 in.
Impeller blade height: 3/16 in.

Vol. of aqueous phase: 43.5 cm^3
Vol. of organic phase: 44 cm^3
Impeller position: at interface of unagitated phases
Photomultiplier voltage: 1009 volts
Amplifier gain: 70
PHS setting: 15 volts integral

Run No.	Impeller Speed (W), rpm	Counts ÷ 64	Counting Time, min	Count Rate counts min^{-1} Gross	Count Rate counts min^{-1} Net	Interfacial Area per cm^3 of Dispersion (a), cm^{-1}	Weber Number $\frac{D^3W^2\rho_F}{\sigma_1}$
1	0	23.77	5	305	-	-	-
2	350	28.86	5	368	53.5	0.2812	18.24
3	0	16.20	3.2	324	-	-	-
4	1130	375.69	3.2	7513.8	7204.3	85.00	190.1
5	0	14.75	3.2	295	-	-	-
6	590	178.16	3.2	3563.2	3273	19.32	51.8
7	0	14.27	3.2	285.4	-	-	-
8	850	480.20	3.2	9604	9317.3	70.80	107.5
9	0	14.40	3.2	288	-	-	-
10	750	391.23	3.2	7824.6	7541.2	52.88	83.62
11	0	13.94	3.2	278.8	-	-	-
12	1110	492.22	4.0	7870	7587.3	95.80	183.5
13	0	14.33	3.2	286.6	-	-	-
14	374	17.84	3.2	356.8	73	0.3848	20.81
15	0	14.05	3.2	281.0	-	-	-
16	475	25.98	3.2	519.6	219.6	1.161	33.60
17	0	15.95	3.2	319	-	-	-
18	740	402.14	3.2	8042.8	7730.3	55.52	81.4
19	0	15.30	3.2	306	-	-	-
20	600	245.22	5.0	3150	2841	16.49	53.58
21	0	174.67	3.6	312	-	-	-
22	521	66.17	3.2	1323.4	1019.6	5.539	40.4
23	0	14.78	3.2	295.6	-	-	-
24	985	345.22	3.2	6904.4	6615.1	70.61	144.4
25	0	17.64	4.0	283	-	-	-
26	1275	446.53	3.2	8930.6	8631.4	134.8	242.0
27	0	15.77	3.2	315.4	-	-	-
28	1555	506.17	3.2	10123.4	9802.6	208.9	359.9
29	0	16.31	3.2	326.2	-	-	-
30	0	15.39	3.2	307.8	-	-	-
31	1985	554.97	3.2	11099.4	10793.6	332.9	746
32	0	15.19	3.2	303.8	-	-	-
33	904	297.06	3.2	5941.2	5630.4	52.18	121.5
34	820	238.05	3.2	4761.0	4450.2	35.51	100.0
35	766	191.19	3.2	3823.8	3513	25.29	87.21
36	593	56.77	3.2	1135.4	824.6	4.620	52.4
37	0	15.89	3.2	317.8	-	-	-
38	593	153.02	3.2	3060.4	2742.6	15.86	52.4
39	0	4320.97	15.75 hr	292.3	-	-	-
40	0	31.27	6.5	308	-	-	-
41	600	141.09	3.2	2821.8	-	-	-
42	600	291.61	6.4	2916.1	2592	14.90	53.58
43	0	15.94	3.2	318.8	-	-	-
44	0	34.02	6.4	340.2	-	-	-
45	780	438.42	3.2	8768.4	-	-	-
46	780	926.27	6.4	9262.7	8822.5	65.67	90.5
47	0	27.39	3.2	547.8	-	-	-
48	0	54.02	6.4	540.2	-	-	-
49	958	569.64	3.2	11392.8	-	-	-
50	958	1148.44	6.4	11484.4	11042	91.78	136.5
51	0	25.98	5	334.2	-	-	-
52	0	34.47	6.4	344.7	-	-	-
53	1185	560.47	4	8970	-	-	-
54	1185	878.23	6.4	8782.3	8455.1	126.6	209.1
55	1185	11408.05	7.8	9360.0	-	-	-
56	1185	921.21	6.4	9212.1	8884.9	147.5	209.1
57	0	30.375	6.4	303.75	-	-	-
58	0	154.81	3.2	309.62	-	-	-
59	1760	581.5	3.2	11790	-	-	-
60	1760	1171.59	6.4	11715.9	11402.4	487.0	461.8
61	0	20.47	4	327.4	-	-	-
62	0	39.70	8	317.5	-	-	-
63	2500	975.33	5	12480	-	-	-
64	2500	1234.56	6.4	12345.6	12023.2	834.0	930
65	0	16.14	3.2	322.8	-	-	-
66	0	32.72	6.4	327.2	-	-	-
67	3600	623.64	3.2	1247.28	-	-	-
68	3600	1202.73	6.4	12027.3	11702.9	612.7	1928
69	0	16.92	3.2	338.4	-	-	-
70	0	32.17	6.4	321.7	-	-	-
71	3160	760.83	4	12170	-	-	-
72	3160	1206.42	6.4	12064.2	11741.1	628.4	1487
73	0	15.875	3.2	317.50	-	-	-
74	0	32.45	6.4	324.5	-	-	-

ORNL-3018
UC-37 - Instruments
TID-4500 (15th ed.)

INTERNAL DISTRIBUTION

1. C. E. Center
2. Biology Library
3. Health Physics Library
4-5. Central Research Library
6. Reactor Division Library
7-26. Laboratory Records Department
27. Laboratory Records, ORNL R.C.
28. A. M. Weinberg
29. L. B. Emlet (K-25)
30. J. P. Murray (Y-12)
31. J. A. Swartout
32. E. H. Taylor
33. E. D. Shipley
34-35. F. L. Culler
36. M. L. Nelson
37. W. H. Jordan
38. C. P. Keim
39. J. H. Frye, Jr.
40. S. C. Lind
41. A. H. Snell
42. A. Hollaender
43. K. Z. Morgan
44. M. T. Kelley
45. T. A. Lincoln
46. R. S. Livingston
47. A. S. Householder
48. C. S. Harrill
49. C. E. Winters
50. H. E. Seagren
51. D. Phillips
52. W. K. Eister
53. F. R. Bruce
54. D. E. Ferguson
55. M. E. Whatley
56. H. E. Goeller
57. C. W. Hancher
58. R. A. Charpie
59. J. A. Lane
60. M. J. Skinner
61. R. E. Blanco
62. G. E. Boyd
63. W. E. Unger
64. R. S. Cockreham
65. A. T. Gresky
66. E. D. Arnold
67. C. E. Guthrie
68. J. W. Ullmann
69. K. B. Brown
70. J. C. Bresee
71. P. M. Reyling
72. R. D. Baybarz
73. J. W. Youngblood
74. R. G. Wymer
75. P. A. Haas
76-80. C. V. Chester
81. R. W. Horton
82. E. Lamb
83. J. T. Long
84-86. J. S. Newman
87. C. D. Watson
88. D. L. Katz (consultant)
89. I. Perlman (consultant)
90. C. E. Larson (consultant)
91. H. Worthington (consultant)
92. J. H. Rushton (consultant)
93. ORNL - Y-12 Technical Library, Document Reference Section

EXTERNAL DISTRIBUTION

94. Division of Research and Development, AEC, ORO
95-711. Given distribution as shown in TID-4500 (15th ed.) under Instruments category (100 copies - OTS)