MARTIN MARIETTA ENERGY SYSTEMS LIBRARIES

3 4456 0364225 3

ORNL-3050
UC-4 - Chemistry

EXPERIMENT ON CONTINUOUS RELEASE OF FISSION GAS DURING IRRADIATION

(An Interim Report)

R. M. Carroll
C. D. Baumann

OAK RIDGE NATIONAL LABORATORY
operated by
UNION CARBIDE CORPORATION
for the
U.S. ATOMIC ENERGY COMMISSION

Printed in USA. Price $0.75 . Available from the

Office of Technical Services
Department of Commerce
Washington 25, D.C.

LEGAL NOTICE

This report was prepared as an account of Government sponsored work. Neither the United States, nor the Commission, nor any person acting on behalf of the Commission:

A. Makes any warranty or representation, expressed or implied, with respect to the accuracy, completeness, or usefulness of the information contained in this report, or that the use of any information, apparatus, method, or process disclosed in this report may not infringe privately owned rights; or

B. Assumes any liabilities with respect to the use of, or for damages resulting from the use of any information, apparatus, method, or process disclosed in this report.

As used in the above, "person acting on behalf of the Commission" includes any employee or contractor of the Commission, or employee of such contractor, to the extent that such employee or contractor of the Commission, or employee of such contractor prepares, disseminates, or provides access to, any information pursuant to his employment or contract with the Commission, or his employment with such contractor.

ORNL-3050
Chemistry
TID-4500 (16th ed.)

Contract No. W-7405-eng-26

Solid State Division

EXPERIMENT ON CONTINUOUS RELEASE OF FISSION GAS DURING IRRADIATION

(An Interim Report)

R. M. Carroll C. D. Baumann

DATE ISSUED

FEB - 9 1961

OAK RIDGE NATIONAL LABORATORY
Oak Ridge, Tennessee
operated by
UNION CARBIDE CORPORATION
for the
U.S. ATOMIC ENERGY COMMISSION

MARTIN MARIETTA ENERGY SYSTEMS LIBRARIES

3 4456 0364225 3

CONTENTS

Abstract..... 1

Introduction..... 1

Experimental Method..... 2

Positioning System..... 4

Thermocouples..... 5

Sweep-Gas System..... 6

Gas Separation and Switching..... 7

Fission-Gas Analysis..... 9

Safety System..... 10

Flux Measurement..... 10

Fuel Samples Irradiated..... 11

Thermal Conductivity of UO_2..... 14

Fission-Gas Emission..... 16

ThO_2-UO_2 Sample..... 17

UO_2 Sample..... 19

Oxidation and Stored Energy..... 21

Diffusion Calculations..... 23

EXPERIMENT ON CONTINUOUS RELEASE OF FISSION GAS DURING IRRADIATION

R. M. Carroll C. D. Baumann

ABSTRACT

A facility has been constructed in which fuel materials may be irradiated to determine their ability to retain gaseous fission products during irradiation. The fuel is heated by its own fission power, which is adjusted by moving the fuel into and out of the reactor neutron flux. At constant power the temperature of the fuel is regulated by air cooling. Fission gas from the fuel is entrained in an inert-gas sweep and carried outside the reactor for analysis. The neutron flux at the fuel may be determined by argon activation.

To date, two samples of ceramic fuel, ThO_2-UO_2 and UO_2, have been irradiated in the facility. The total activity of the released fission gas from both samples was dominated by short-lived isotopes. Measurements from 1000 to 2000°F show that iodine, xenon, and krypton were released by a temperature-dependent process above 1300°F. Diffusion coefficients were calculated for the UO_2 sample. There was no change in thermal conductivity of 95% density UO_2 up to 2300 Mwd/metric ton burnup; in the 1000 to 2000°F range, $K = K_0 e^{-1.21T \times 10^{-3}}$ (T = °K). An in-pile oxidation of UO_2 was indicated by a stored-energy release and a large increase of fission-gas release. A 3% hydrogen addition to the sweep gas partially reduced the fuel and decreased fission-gas release.

INTRODUCTION

The escape of fission gas from a ceramic fuel takes place by means of three main processes: diffusion through the fuel material, escape by moving along grain boundaries or defects in the fuel such as micro cracks, and recoil from the fuel in the moment of fission. Nearly all the ceramic fuels now used or proposed are formed from a compacted and sintered powder. This method of formation does not yield a homogeneous structure, and grain size as well as the amount of porosity will vary widely according to the method of sintering and compacting and the type of powder used. The variables affecting the escape of fission gas from a ceramic fuel include the

density, temperature, grain size, surface-to-volume ratio, burnup, impurities, and (for UO_2) oxygen content. Two samples, one of ThO_2-UO_2 and one of UO_2, have been studied. Fission-gas release as a function of temperature has been explored, and, to a lesser extent, its dependence upon oxygen content and burnup. This interim report is issued primarily to relate the experimental procedures and the initial general observations.

The authors are grateful for the assistance of G. S. Suessmann, a guest from Germany, in compiling and evaluating data.

EXPERIMENTAL METHOD

The fuel samples are placed within a capsule and hung vertically within the lattice of the Oak Ridge Research Reactor. The fuel is heated by its own fission heat, and the power generated in the sample is regulated by moving the capsule up or down until the desired neutron flux is obtained. The sample temperature, recorded by attached thermocouples, is controlled by cooling the outside of the capsule with an air stream. The fission gas evolved from the fuel is entrained in a moving stream of inert gas and carried to a shielded cubicle outside the reactor for analysis by gamma-ray spectroscopy. With this arrangement the power in the sample may be varied over a limited range without changing the average temperature of the fuel, and the temperature may be varied while the sample is at constant power. The rate of flow of the inert-gas sweep may be changed so that the time of transit for the fission gas between fuel and analyzer is variable (see Figs. 1 and 2). All of the experiment controls, except for sweep gas, are located on the instrument panel (see Fig. 2). The temperature and activity recorders as well as the pulse-height analyzer for the gamma-ray spectroscope are in the same room.

The in-pile portion of the facility consists of two parts: the stationary section that contains the air-cooling system and the movable section that contains the fuel, thermocouples, and inert-gas sweep system. The air-cooling section is constructed of stainless steel and is formed of two concentric tubes. The cooling air is filtered and the flow is controlled by regulating pressure at the instrument panel. Air travels

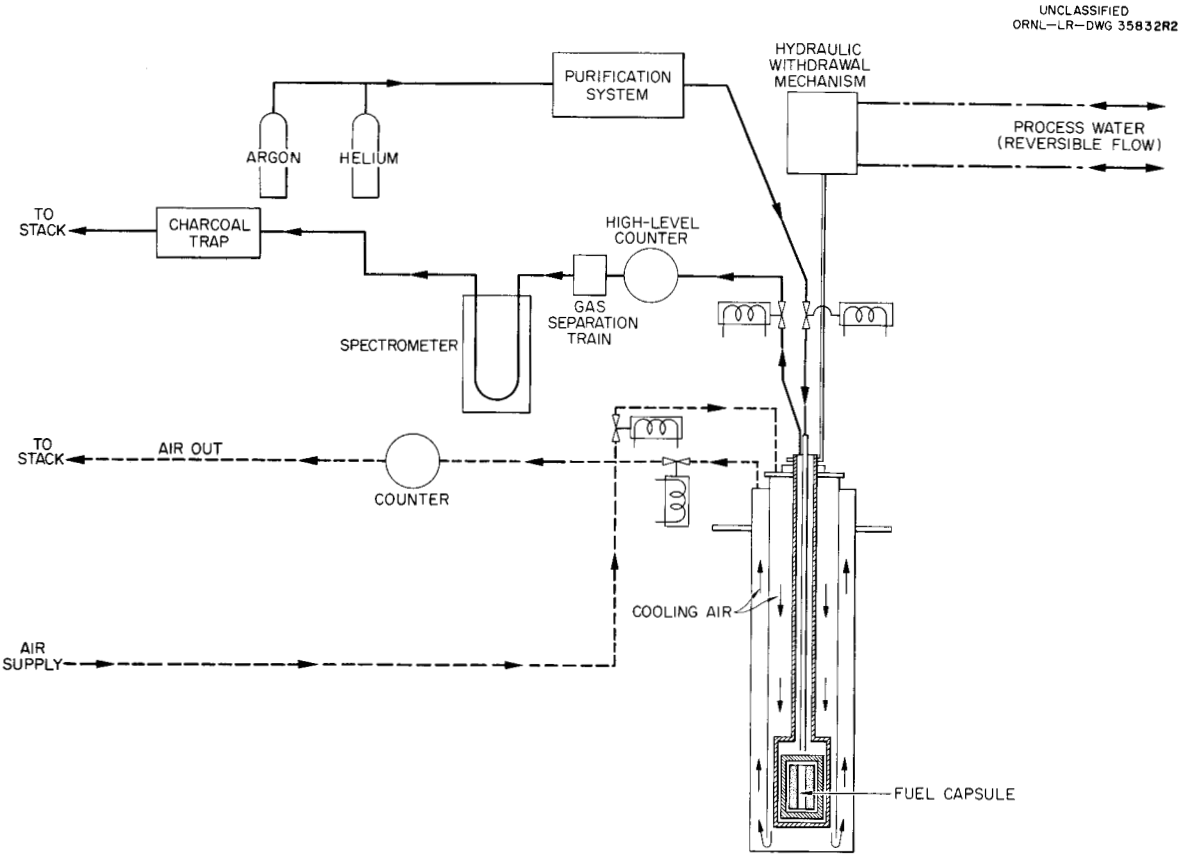

Fig. 1. Gas Flow System.

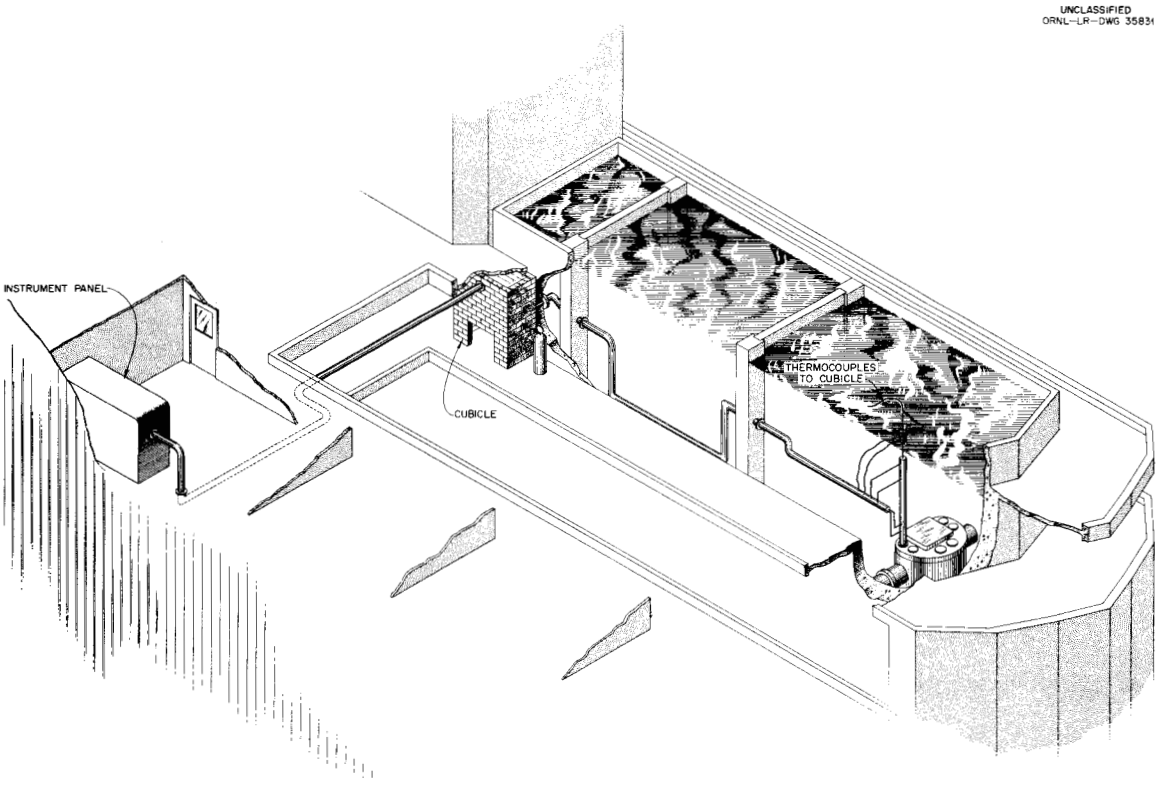

Fig. 2. Experiment Arrangement in the ORR Building.

down the inner tube, over the sample capsule, and up the outer tube, which is in contact with the reactor cooling water. The air is monitored in the cubicle for radioactivity and then passed into the reactor off-gas system. The movable inert-gas sweep system also is formed of two concentric tubes. Inert gas is passed down the inner tube, which also contains the thermocouple leads, over the fuel sample, and up the outer tube, which is cooled by the air stream. The sweep gas, with entrained fission gases, flows through tubing surrounded by pool water until it reaches the shielded cubicle, where it is monitored for activity and passed on to the analysis apparatus.

To prevent neutron streaming, the in-pile portion of the air-cooling system contains a curved offset just above the reactor lattice. When the fuel is moved up or down, the movable section must flex around this curve. The inner tube of the inert-gas system is therefore aluminum, except for a 10-in. Inconel section in the high-temperature zone, and the outer tube of stainless steel contains a flexible bellows section.

Positioning System

A hydraulic positioning device with an 18-in. travel is used to move the fuel to the desired flux level (see Fig. 3). This positioner is submerged in the reactor pool and is powered by line water pressure. Two stainless steel hydraulic cylinders are used to obtain a balanced thrust. The water pressure to the cylinder is controlled by solenoid valves which are normally operated manually, but the instrumentation is arranged so that an approach to a dangerous condition will result in automatic withdrawal of the sample from the high-flux region of the reactor. This movement of the sample has almost no effect upon the reactivity of the reactor. Neoprene chevron packings are used at the sliding joint to prevent the pool water from leaking into the air-cooling system.

A stainless steel cable is fastened to the movable section of the facility to transmit the motion to a selsyn master. Tension in the cable is maintained by a continuous-stall motor which, along with the selsyn master, is mounted on a header box above the reactor pool water. By throttling the water flow of the positioning cylinders to obtain flow movements, the position of the fuel can be set to within 0.1 in. By varying position and air flow, any desired temperature can be obtained.

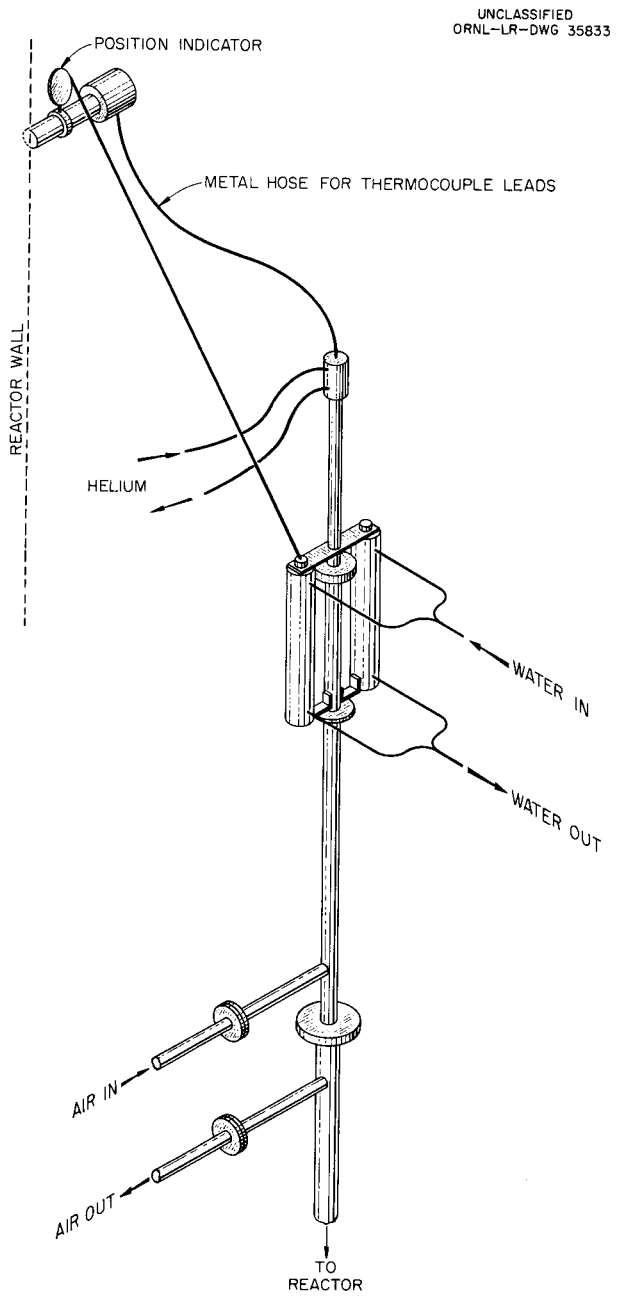

Fig. 3. Positioning Apparatus.

Thermocouples

The thermocouples, Pt vs Pt-10% Rh, are pressed against the fuel. Outside the hot zone the thermocouples are attached to lead wires which are passed along the innermost tube of the inert-gas sweep system. A

blocking box, located at the top of the movable section, contains a gastight seal to prevent leaks of active gases along the thermocouple conduit. The thermocouple lead wires pass through this seal, along a flexible hose, and to the header box located above the pool water. This header box is also gastight and contains a connection to the reactor off-gas system. The thermocouple lead wires are passed through a second seal in the header box and then through conduit to the instrument panel.

Sweep-Gas System

The sweep gas is usually helium, but sometimes argon is used. The bottled sweep gas is pressure-regulated and passed through a purifying system. The helium purifying system originally consisted of an activated-charcoal column and a glass-bead-packed column filled with NaK. High-temperature calcium turnings were used to purify the argon. Oxygen is now being removed from the sweep-gas stream by a 3% addition of hydrogen to the bottled supply and then catalyzing a reaction between the hydrogen and the oxygen present. The gas stream is then dried with activated alumina and passed through a column of high-temperature (1400°F) copper turnings. The gas initially contains from 1 to 10 ppm oxygen, and this treatment reduces the oxygen content below 1 ppm, which is the limit of analysis. The excess hydrogen in the sweep gas also tends to retain the fuel in the reduced state.

The flow rate of the sweep gas is measured with a calibrated rotameter. After passing over the fuel and entraining the fission gases, the sweep gas flows to the cubicle, where it is monitored for total activity with a high-level G-M counter, and is then filtered and passed to a valving system used to direct the flow of sweep gas. This valving system is operated with solenoid valves and controlled from the instrument panel. With one position of the valving system the sweep gas enters a U-shaped counting tube which is inserted in a lead shield that contains an NaI crystal coupled to a photomultiplier tube. The spectrum of the gamma rays is obtained with a pulse-height analyzer located on the instrument panel. The gas then passes to a charcoal holdup tank that delays the fission gases and reduces the activity dumped into the reactor off-gas system.

The flow rate of the sweep gas ranged from 1 to 10 cc/sec, which was low in comparison with the cooling-air flow. Changing the flow rate of the sweep gas had no measurable effect upon the fuel temperature, so the heat generated in the fuel was removed by the cooling air rather than by the sweep gas. Varying the sweep-gas flow rate accomplished two purposes. First, the fission-gas "density" (the number of atoms of fission gas per cc of helium), which is inversely proportional to the flow rate, was changed. Since the counting tube has a fixed volume, increasing the flow rate would reduce the count rate measured by the gamma spectrometer. Second, the fission gases were carried from the fuel to the spectrometer in a time inversely proportional to the rate of flow. The decay constants of short-lived isotopes may be determined by the activity change as a function of travel time. The total activity measured over the flow range had remained nearly constant, the decay of short-lived isotopes compensating for the increased density of radioactive atoms when the sweep rate was reduced.

Gas Separation and Switching

The fresh fission gas has a high activity due primarily to short-lived isotopes of xenon and krypton. The spectra obtained with the higher flow rates have been too complex for analysis. To aid in the analysis of the spectrum, a system of filters and charcoal adsorbers has been placed in the sweep-gas circuit. This is part of the valving system which is operated with solenoid valves and controlled from the instrument panel. For the amount of charcoal used in the traps, with a sweep-gas flow rate of 6 cc/sec, krypton passes through the traps with only a 5-min delay, while xenon is delayed nearly 2 hr.[1] In this manner the isotopes of krypton in the fission gas can be measured alone, and when the xenon breaks through, the combination of these two gases is measured. The fission gas can then be shunted around the trap system and the traps heated and purged with pure helium to reactivate the charcoal. As yet, no data have been obtained with this system.

---

[1]W. E. Browning, R. E. Adams, and R. D. Ackley, Removal of Fission Product Gases from Reactor Off-Gas Streams by Adsorption, ORNL CF-59-6-47 (June 11, 1959).

The term "fission gases" has been used here rather loosely. In this report, an atom which will remain in the carrier gas stream after contacting surfaces to which it could adhere will be termed a "gas." Atoms which adhere to surfaces will be considered to be plated, or solids. A good example of this is the mass-chain 135, in which iodine is formed. Iodine is "gaseous" at the experiment temperatures, but it can be plated from the gas stream with a simple filter that provides contact surface. The iodine then decays with a 6.7-hr half-life to Xe^{135}, which is released from the surface where the iodine was plated. The xenon decays with a 9.2-hr half-life to Cs^{135}, which will adhere to a surface that it contacts. The daughter products of Cs^{135} apparently remain plated upon the same surfaces.

Although the elements which will adhere to a surface are removed from the sweep stream before they enter the counting tube, daughters of krypton and xenon plate upon the surface of the counting tube. These solids are continuously formed from the decay of the fission gases. The plated solids are also radioactive, and some of these decay with the emission of gamma rays. As a consequence, there are gamma rays emitted from the counting tube which are not due to flowing fission gas. The amount of plated solids in the counting tube will vary with the fuel temperature, time of operation, sweep rate, etc. The gamma activity due to these plated solids is generally about one-third the total activity. The major part of the gamma activity from the plated solids is due to cesium, and this type of contribution is called the cesium "background." This cesium background is measured by using the valving system to shunt the sweep gas stream around the counting tube and to simultaneously purge the counting chamber with a rapid flow of pure helium. All gaseous fission products are swept from the counting tube, and only the plated products remain.

Another kind of "background" is due to xenon formed from iodine plated in the lines. This xenon enters the sweep gas and cannot be distinguished from xenon emerging from the fuel. The amount of xenon contributed in this manner can be determined by withdrawing the fuel from the reactor flux, so that the release of gas from the fuel ceases, and then measuring the continued release of xenon.

Fission-Gas Analysis

The analysis of the sweep gas by gamma-ray spectroscopy is approached in two fashions. In the first, and more difficult method, the isotopic content of the flowing gas is determined on a steady-state basis. In the second, samples of the gas are trapped in containers so that the shorter-lived isotopes can decay and half-lives can be used to aid in identification. This sampling method utilizes medical serum bottles and a hypodermic needle attached to the sweep-gas system.[2] The needle is used to pierce the soft rubber cap of the serum bottle, which is first evacuated and then filled with the sweep gas. The soft rubber cap of the serum bottle seals gastight. These bottles, which are of nearly uniform volume and inexpensive, are discarded after use.

For the steady-state analysis of the fission gas, the sweep gas is passed through a counting tube which is near a 3 × 3 in. NaI(Tl) crystal. The crystal is coupled to a Du Mont 6363 photomultiplier tube, and both are enclosed in a lead shield located in the cubicle. The counting tube, containing the flowing fission gas, is inserted in a hole in the shielding and essentially consists of a line source.

The counting apparatus was standardized by using dummy counting tubes filled with radioactive solutions of known activity. The activity results are presented as photons cm^{-3} sec^{-1}. Since the concentration of the fission products is an inverse function of the sweep-gas flow rate, the activity is normalized by correcting to a flow rate of 1 cm^3/sec.

The output of the photomultiplier tube is fed to a preamplifier and then to a DD-2 amplifier. The amplifier pulse is passed to a single-channel pulse-height analyzer and recorded on an x-y recorder. The single-channel analyzer was found to be inadequate for the analysis of the complex spectra, and a 256-channel pulse-height analyzer has just been obtained which should permit a steady-state quantitative analysis of the fission gas.

---

[2]F. J. Brutschy, GE-Vallecitos, personal communication, Jan. 5, 1960.

Safety System

The facility was designed to operate as an unmanned experiment. In the event of loss of electrical power, air, water, or sweep-gas pressure, an alarm is sounded in the reactor control room and the sample is automatically withdrawn from the reactor. In the event of high activity in the air-cooling or sweep-gas system, the system is isolated by solenoid valves so that the activity will not leave the reactor shielding, the alarm is tripped, and the sample is withdrawn. In the event of high temperatures the sample is first withdrawn; then, if the temperature continues to rise, an alarm is sounded and finally the reactor is set back. The temperature recorders are arranged so that loss of continuity in a thermocouple will result in a reactor setback. The sample is withdrawn automatically in case of an alarm, but it must be inserted into the reactor manually. The sample cannot be inserted when the system is in the alarm mode.

The reactor has never been set back by the experiment, and the entire operation has been remarkably free of trouble. It is especially gratifying (to both the experimenter and the reactor operators) to be able to vary the neutron flux at the experiment without changing the reactor power. Since moving of the sample has no detectable effect upon the reactor, the sample is moved without notifying the reactor operators.

Flux Measurement

To determine the ratio of released to retained fission gas on a steady-state basis, it is necessary to know the steady-state formation of the fission gas. This can be calculated if the neutron flux is measured, since the enrichment and the fission cross section are known. The neutron flux cannot be measured satisfactorily by foil activation because the flux is locally perturbed by the experiment. Also, the flux varies with time according to the reactor loading and the control-rod positions.

An argon activation method has been developed to avoid the above difficulties. Argon is purified and throttled into the sweep-gas system to replace the helium as a sweep gas. The argon is activated by the same flux which produces fission in the fuel. Argon-41, which contributes

the only significant gamma-ray activity, has a 1.8-hr half-life and emits a single 1.3-Mev gamma ray. The flowing argon is activated on a steady-state basis proportional to the neutron flux and the time of exposure. The rate of activation of the argon can be determined by either continuous analysis with the multichannel analyzer, or, more simply, by taking grab samples and allowing the short-lived components of the fission gas to decay before making a gamma-ray analysis. Usually, the flux measurements need to be made only once for a particular fuel sample. This is because the temperature of the fuel is a function of the neutron flux and the air cooling. By correlating the fuel temperature to the measured flux at a given cooling rate, the flux may be determined at some later date by temperature measurement (correcting for burnup).

When argon was substituted for helium as a sweep gas, the temperature of the fuel increased due to the lower thermal conductivity of the argon. The temperature increase was proportional to the power generation and was sometimes as high as 500°F. By using this method of increasing the fuel temperature, as well as regulating the cooling-air flow, a wide range of temperatures was attained at constant fission power.

FUEL SAMPLES IRRADIATED

The ThO_2-UO_2 sample was a solid solution of ThO_2 with 4.7% UO_2, fully enriched. It was in the form of a right cylinder 0.5 in. OD and 0.5 in. long with a 0.26-in. axial hole (see Fig. 4). The sample had an immersion density of 9.7 g/cm^3 (96.8% theoretical) measured by CCl_4 vacuum impregnation techniques.

Fuel surface temperatures of more than 1900°F could not be maintained with the ThO_2-UO_2 sample, because the Inconel capsule fitted tightly, and at this temperature the Inconel was slightly above 1500°F (a nominal safe limit in contact with air). The cylinder of ThO_2-UO_2 was so short that end losses were very high, and the inner surface was very little hotter than the outer surfaces. This sample was irradiated to test the facility and to determine the rate of fission-gas release at various temperatures. One of the primary disadvantages of this sample was the high temperature differences between the surfaces and the interior of the fuel. Because of this, it was difficult to assign a temperature to a given gas release.

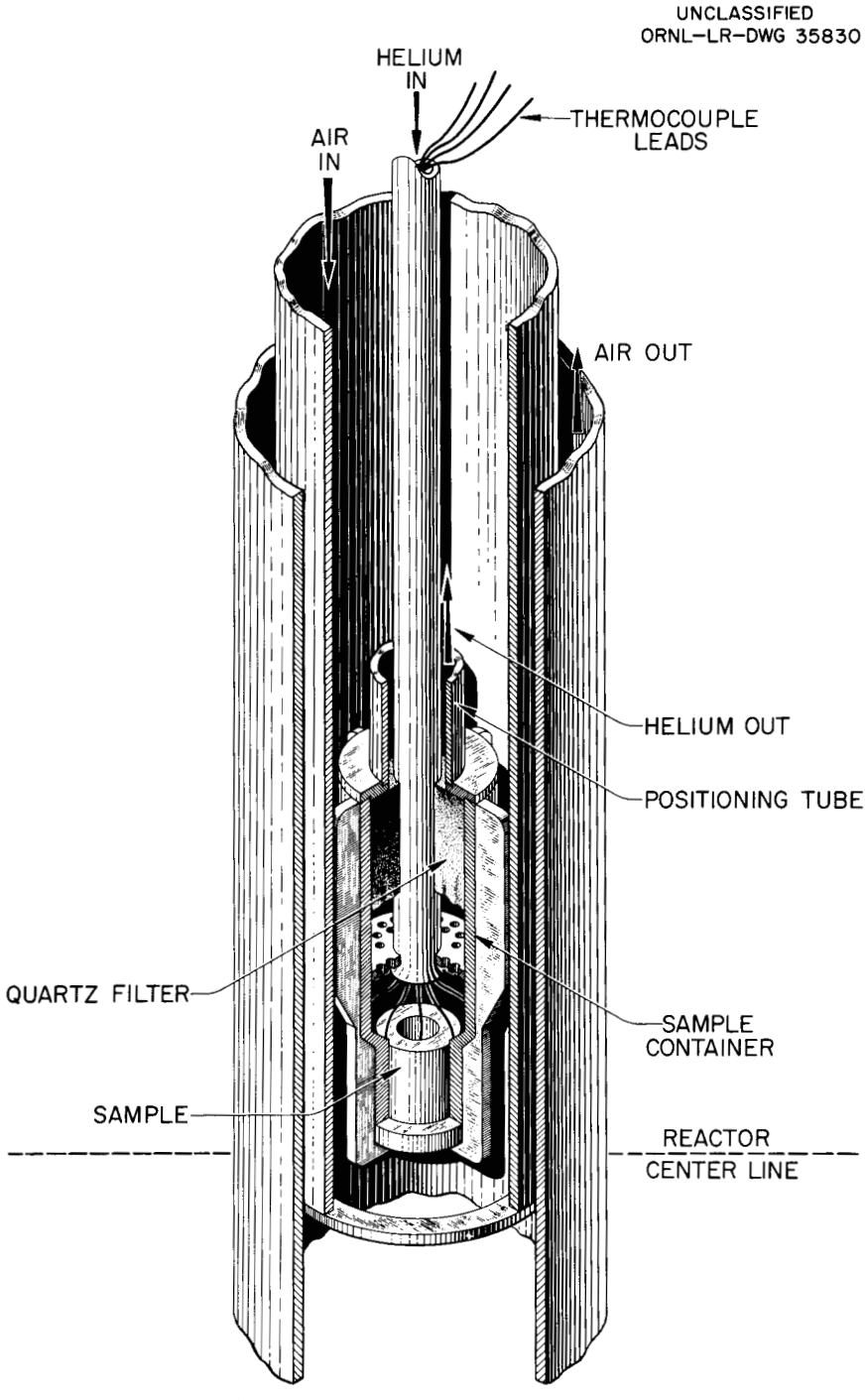

Fig. 4. ThO_2-UO_2 Sample Positioned in Facility Tube.

The UO_2 specimen was in the form of two thin plates, 1.0 in. long, 0.64 in. wide, and 0.032 in. thick. The plates were assembled parallel to each other with thermocouples sandwiched between them and pressed against the outer surfaces. The UO_2 was 97% theoretical density, with

a surface area (measured by gas adsorption methods) about four times the geometrical area. The oxygen-to-uranium ratio was 2.01. The plates contained 0.028% C, 40 ppm Fe, 25 ppm N, and less than 15 ppm Ni, Cr, and Si. The U^{235} enrichment was 4% and each plate weighed 3.3 g (see Fig. 5).

The thin-plate shape was selected for the following reasons:

1. The temperature differences through the fuel would be small, and a specific temperature could be assigned to a fission-gas release.

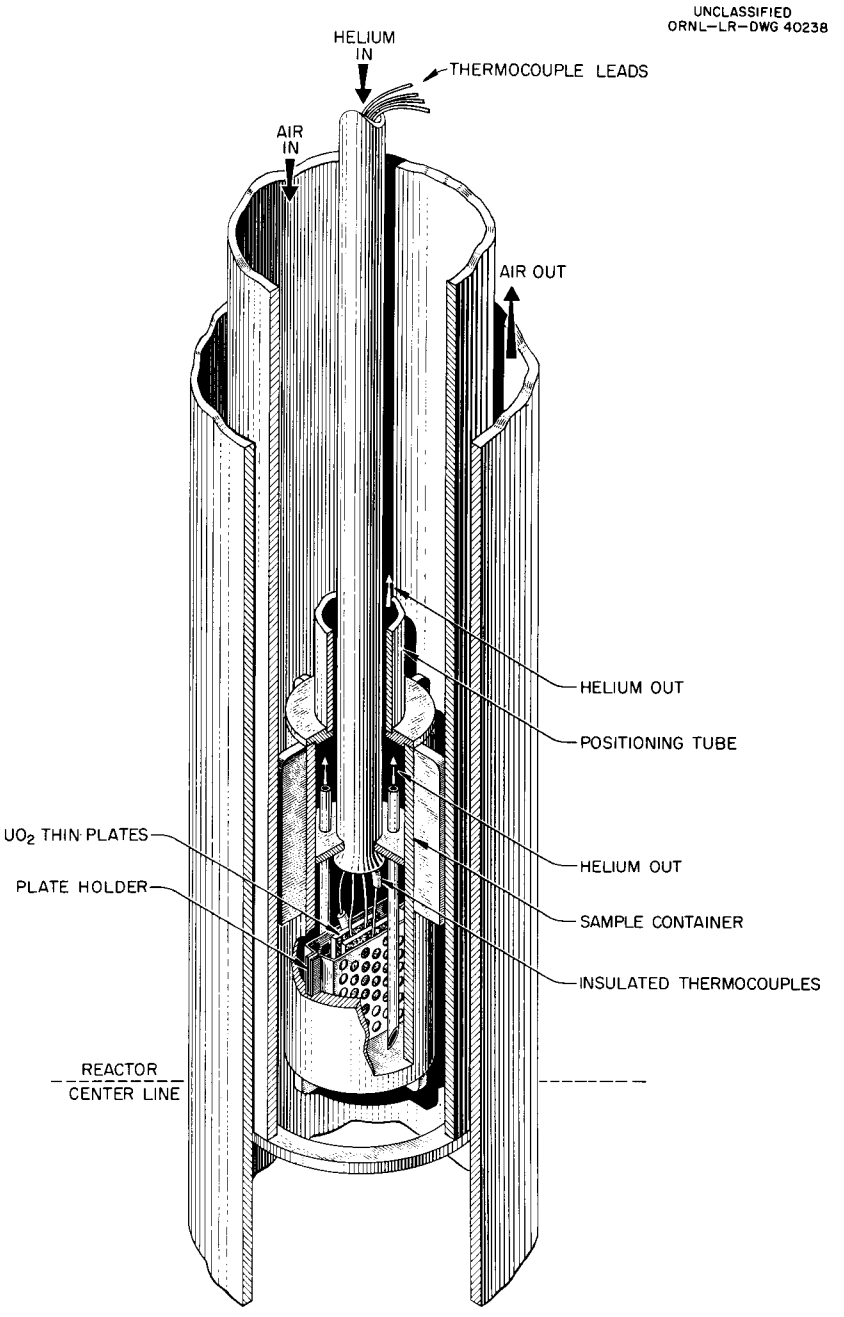

Fig. 5. UO_2 Thin-Plate Samples Positioned in Facility Tube.

2. Because of the small temperature differentials, thermal stresses would be low, and the fuel would not crack and expose fresh surfaces for fission-gas release.
3. The thickness of the plate was small compared with the width; thus edge losses for heat and fission gas could be neglected.
4. The space between the plates would be at the highest temperature of the fuel, and no temperature gradient would exist in that region, so this temperature could be measured accurately.
5. The plates were the only thin-cross-sectioned high-density shape that could be formed without extensive development – as contrasted with hollow tubes, hollow spheres, etc.

THERMAL CONDUCTIVITY OF UO_2

The thin-plate configuration of the UO_2 sample allows thermal conductivity measurements during irradiation, since the temperature drop across a plate with uniform internal power generation and no edge losses is

$$\Delta T = \frac{L^2 Q}{2K} \quad , \tag{1}$$

where

Q = power generated per unit volume,

L = half thickness of the plate,

K = thermal conductivity of the plate,

ΔT = temperature difference between center and surface of the plate.

The flux depression through the plates is small, so uniform power generation can be assumed. Also, because the width-to-thickness ratio is 20, the edge losses may be ignored. The ΔT is measured by directly opposing thermocouples located between the plates and on the outer surface. The thickness of the plates is known, and the power generation is calculated from the flux measurements. The heating by gamma-ray absorption is estimated to be less than 1 w/g, which is small compared with the usual operation power of 30 w/g.

Absolute measurements of thermal conductivity are subject to the above assumptions and to the accuracy of the flux measurements (accurate to within 10%). Change in thermal conductivity during irradiation can be detected by temperature measurements; when the temperature of the surface of the assembly which contains the fuel is a constant (for a

given air flow), the power generated within the assembly is a constant. If the temperature inside the fuel sandwich remains a constant with time under these conditions, then the thermal conductivity of the material has not changed with time.

The variation of thermal conductivity with temperature can also be established, since the power generated in the fuel can be maintained constant while the temperature is varied up to 1000°F. In this manner

$$\Delta T = \left[\frac{L^2 Q}{2}\right] \frac{1}{K} \quad , \tag{2}$$

where the expression in brackets is a constant.

In the 1000 to 1800°F range the variation in thermal conductivity agreed (within instrument limits) with the relation given by Kingery[3] for UO_2 of 95% theoretical density:

$$\frac{K}{K_0} = e^{-1.21T \times 10^{-3}} \quad , \tag{3}$$

where T = absolute temperature. The value of K_0 is given by Kingery as 0.143 w cm^{-2} $(°C)^{-1}$. This formula should not be extrapolated above 1800°F.

No change in thermal conductivity of more than 15% (the instrument limit) was observed in the initial two-month period during an irradiation of 1.2×10^{20} nvt (thermal). This is shown by the reproducible temperature relations within the fuel capsule (see Fig. 6). This also shows

[3]V. J. Tennery, Review of Thermal Conductivity and Heat Transfer in Uranium Dioxide, ORNL-2656, p 10 (Apr. 10, 1959).

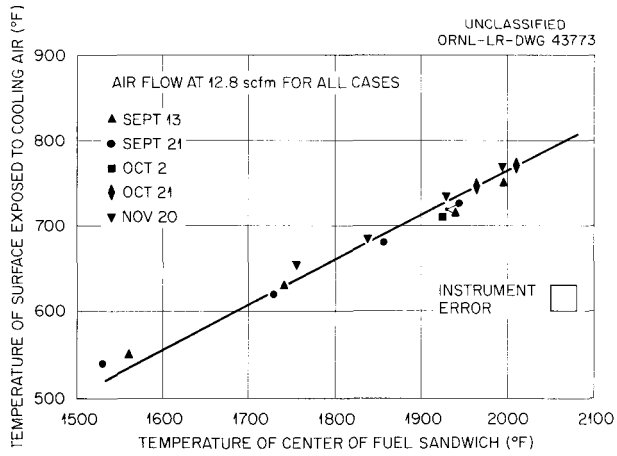

Fig. 6. Surface Temperature vs Fuel Temperature.

that the plates had not cracked or broken during this time, although they had experienced rapid changes of temperature due to reactor scrams and sudden withdrawals.

Because of repairs to the reactor off-gas system, the sample had to remain in the withdrawn position for over two months. When the sample was reinserted at the end of this time the temperature relations had changed. This led to the conclusion that one of the plates had cracked, either during the withdrawn period or upon the reinsertion. Thermal conductivity studies on this sample were then discontinued.

FISSION-GAS EMISSION

The amount of fission gas measured is a function of fuel composition, temperature, decay time, and power. When the temperature and the power were constant the release rate reached an apparent equilibrium in about 2 hr. A variation in the sweep-gas flow rate does not affect the fission-gas release because the fuel temperature does not change. Increasing the sweep-gas flow rate will bring the fission gas from the fuel to the spectrometer in a shorter time, and a greater proportion of short-lived isotopes will be present in the sweep gas.

The term "fission-gas half-life" is used here to designate the time in which the total gamma-ray activity of the gas would decrease by one-half if the instantaneous decrease in activity continued with a fixed, single decay constant. This means that the gas has a half-life that varies with time. The designation of the fission gas by a half-life is useful in that it designates the half-lives of the isotopes dominating the activity at that time. Also, the half-life of the gas is a function of the lapsed time since the formation of the gas by fission.

The half-life of the fission gas can be measured for a known travel time between the fuel and the spectrometer. This half-life can be compared with the calculated[4] half-life of fission gas as a function of time. Since the fission gas may be delayed in emerging from the fuel as well as in moving from the fuel to the spectrometer, this comparison will indicate the length of time the gas was in the fuel before it was released.

---

[4]R. C. Bolles and N. E. Ballou, Fig. 7-A, Nuclear Sci. and Eng. 5, 179 (1959).

The travel time of the gas from fuel sample to spectrometer was measured by abruptly changing the flow rate of the cooling air. This produced a rapid temperature change in the fuel which caused an immediate change in the fission-gas release rate. The time between the temperature change in the fuel and the activity change measured at the spectrometer was the travel time of the gas.

When the temperature of the fuel sample was increased, a store of fission gas was released. These bursts sometimes peaked at twice the equilibrium activity, and subsequent activity equilibrium was attained within 2 hr. The magnitude of these bursts was a function of the history of the irradiation and the temperature change.

ThO_2-UO_2 Sample

In the gas from the ThO_2-UO_2 sample the following isotopes were identified: Kr^{88}, Kr^{87}, Kr^{85m}, Xe^{138}, Xe^{135}, Xe^{133}, I^{131}, La^{140}, and Cs^{138}. Other isotopes were present which could not be identified. The above products all have half-lives greater than 17 min, so they cannot be the dominating activity of the fission gas which emerges from the fuel with a half-life of less than 1 min.

The amount of iodine measured in the gas stream was highly dependent upon the flow rate of the sweep gas, because at lower flow rates there is a greater probability that the iodine would contact and stick to the surface of the sweep-gas system. A filter of metal and glass wool was installed to provide a surface to which the iodine (and other solids in the sweep gas) could plate. This filter removed the iodine and other solids before the gas reached the spectrometer.

At a travel time of 1 min from sample to spectrometer the half-life of the fission gas is approximately 0.7 min. The calculated half-life of gross fission product activities 1 min after fission is approximately 0.7 min.[4] The fact that the half-life is that expected if there were no delay in release led to the speculation that the greater part of the fission product release is by surface recoil. Since diffusion is temperature dependent, and recoil release should be a function of fission rate only, a study of sweep-gas activity vs fuel temperature at a constant fission rate and constant sweep flow rate was made (see Fig. 7). Above 1100°F

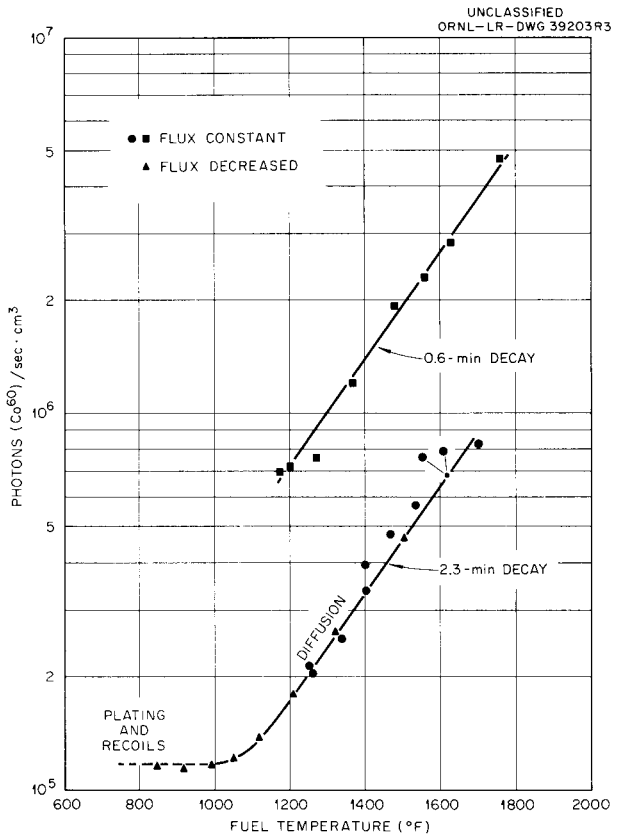

Fig. 7. Fission-Gas Activity as a Function of Temperature.

the activity of the gas was an exponential function of temperature. The conclusion seems to be that the major part of the fission gas is released by a diffusion process at temperatures above 1100°F, but that the diffusion time from the instant of fission to the moment of release from the fuel must be short. The small amount of activity due to the recoil process can be explained by the fact that the stopping power of the sweep gas is small and most of the recoils are embedded in the metal capsule walls.

The temperatures given for the ThO_2-UO_2 sample are the surface temperatures of the fuel. No calculations for diffusion coefficients for this sample were made because of the unknown temperature distribution. Measurements of the release of krypton from the ThO_2-UO_2 show escape of about 0.06% of the Kr^{88} steady-state formation in the 1700 to 1900°F range. The method of neutron flux measurement by argon activation had not been developed during the irradiation of this specimen, and the flux was calculated by a heat balance method.

UO_2 Sample

The fission gas from the thin plates of UO_2 contained the same isotopes as those from the ThO_2-UO_2 sample. The sweep-gas system was usually operated at a low flow rate so that the shorter-lived isotopes would decay before reaching the spectrometer.

Because of the effect of the plated iodine upon the total xenon production, a study was made of the temperature dependence of iodine released from the UO_2. For this study the flux was maintained constant while the experiment was performed at various temperature levels. The fuel was withdrawn from the reactor after various lengths of time under constant conditions, and the xenon activity was measured. The xenon activity data obtained in this manner were plotted (see Fig. 8) as a function of the temperature of the fuel (before withdrawal) when the iodine was released. This measures the rate of iodine diffusing from the UO_2 during irradiation. The activity of the xenon gas that evolved from the fuel (when

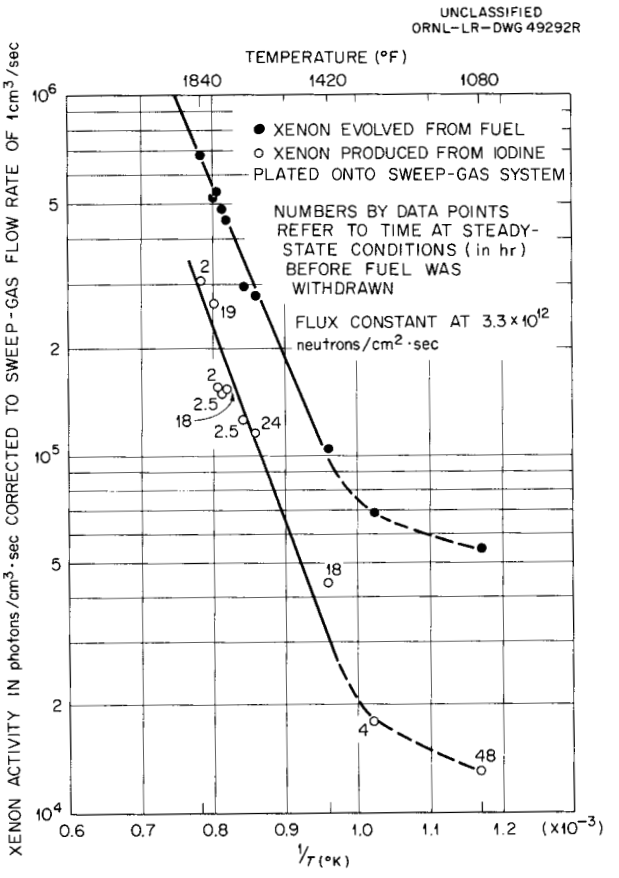

Fig. 8. Temperature Dependence of Iodine Release from UO_2.

the fuel was in the neutron flux) was also plotted in the same manner for comparison. Since for diffusion release the amount of gas evolved is an exponential function of reciprocal absolute temperature, the logarithm of the activity was plotted as a function of reciprocal absolute temperature. If the release was by a diffusion process the plot should be a straight line. This was indeed the case for temperatures of 1400°F or more; furthermore, the iodine showed the same temperature dependence as xenon.

At constant temperature and flux the rate of iodine release will be a constant. The amount of iodine within the sweep system should increase until the rate of iodine decay is equal to the rate of iodine release from the fuel. The numbers by the points in Fig. 8 give the hours at steady-state conditions before the fuel was withdrawn. This demonstrates that only 2 hr is necessary to obtain an equilibrium production of xenon from the plated iodine. If the iodine is deposited at a uniform rate, the amount of iodine deposited will increase for a time equal to about five half-lives of the iodine. The greater proportion of the xenon activity from the plated iodine is due initially to Xe^{135}, which is produced by the decay of I^{135}. The I^{135} has a 6.7-hr half-life, so the amount of I^{135} should increase for about 30 hr before it reaches equilibrium. Since, in fact, equilibrium production of xenon is obtained much earlier than 30 hr, the assumption of uniform rate of release of the iodine must be questioned.

The total escape of xenon and krypton from the fuel, regardless of method of release, is of primary importance. To determine the rate of gas release as a function of temperature, the flux was held constant and the fuel temperature set at an arbitrary level. When the gas activity was at equilibrium, samples of sweep gas were trapped and analyzed for Xe^{135} and Kr^{88}. The samples were taken over a period of several days at random temperatures. The results of these samplings are given in Fig. 9. The numbers by the points give the sequence of measurement and demonstrate that the line represents an equilibrium value with time. One point was taken at a higher flux but within the temperature range. The amount of gas evolved increased with higher flux, as would be expected. Two samples of gas, marked A and B on Fig. 9, were taken soon after the fuel was

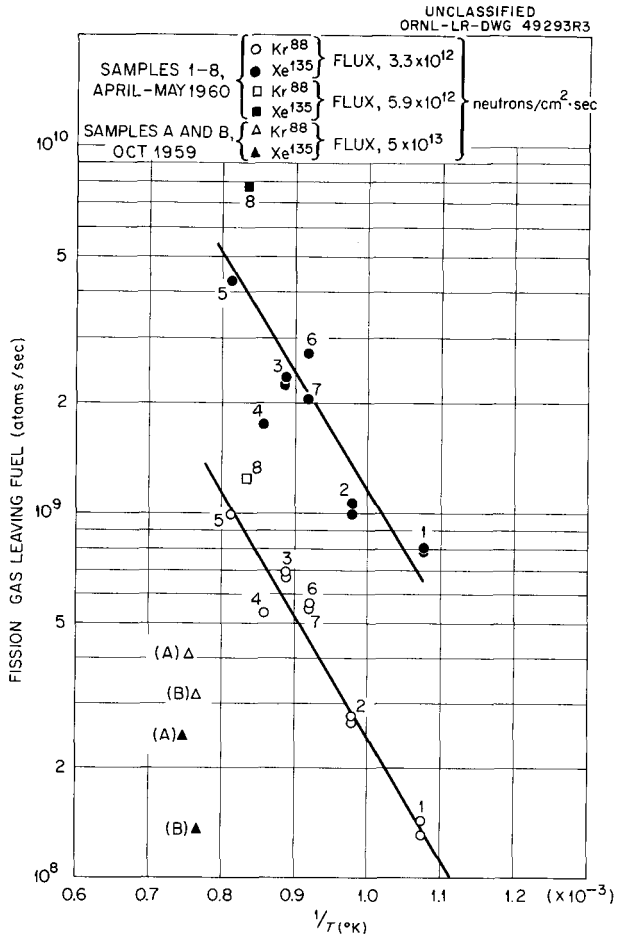

Fig. 9. Temperature Dependence of Xe-Kr Evolution from UO_2.

placed in the reactor. The remainder of the samples were taken six months later. Some change must have occurred in the fuel during this interval, since the fission-gas release rate increased, even though temperature and flux were lower. The same data are given in Table 1 as fractional release.

Oxidation and Stored Energy

The fractional release of krypton and xenon from the fuel not only increased by more than a factor of 100 since samples A and B were measured, but the relative proportion of krypton and xenon released changed, so that a greater proportion of xenon was released. This change in fission-gas release was thought to be due to oxidation of the UO_2 rather than

Table 1. Steady-State Release of Kr^{88} and Xe^{135} from a Thin-Plate Sample of UO_2

Gas Sample	Time	Flux (neutrons cm^{-2} sec^{-1})	Temperature (°F)	Per Cent Release	
				Kr^{88}	Xe^{135}
A	Oct. 1959	5×10^{13}	1945	0.031	0.036
B	Oct. 1959	5×10^{13}	1890	0.017	0.018
		Fuel Oxidized			
1	Apr. 6, 1960	3.3×10^{12}	1220	0.3	1.1
2	Apr. 6, 1960	3.3×10^{12}	1380	0.6	1.4
3	Apr. 6, 1960	3.3×10^{12}	1570	1.5	3.2
4	Apr. 8, 1960	3.3×10^{12}	1640	1.2	2.5
5	Apr. 8, 1960	3.3×10^{12}	1760	2.2	5.7
6	May 3, 1960	3.3×10^{12}	1500	1.3	4.0
7	May 4, 1960	3.3×10^{12}	1500	1.2	2.9
8	May 6, 1960	5.9×10^{12}	1700	1.6	6.1

to radiation damage. Other experimenters[5] have reported an increased fission-gas release with increasing oxidation of UO_2. The UO_2 could have been oxidized by trace amounts of oxygen in the sweep gas.

During a routine insertion of the fuel into the reactor, a temperature excursion was observed that could only be explained as a release of stored energy. The conditions for storing energy in the fuel (neutron irradiation at low temperatures) were duplicated, and a stored-energy release was again observed. The energy release began in the range 500 to 600°F, and 4 to 6 cal/g was released. Stored energy has been observed by Childs and McGurn,[6] but only in irradiated UO_2 with an O/U ratio of 2.08 or more.

---

[5]C. B. Webster and F. J. Stubbs, Uranium Oxides, U.K. Research Newsletter No. 18, p 2 (April 1960).

[6]B. C. Childs and J. McGurn, The Differential Calorimetering of Irradiated UO_2 and U_4O_9, CR Met-893, p 5 (December 1959).

The observation of stored energy as well as the increase in fission-gas release indicated that the O/U ratio of the fuel (initially 2.01) had increased. The sweep gas was made into a reducing atmosphere by a 3% hydrogen addition. When the hydrogen first encountered the UO_2 there was a burst of fission gas released that gradually subsided over a period of about 8 hr. There was no temperature change at the time of the burst, and this is the only burst observed in this experiment not caused by a temperature variation. The fission gas did not change in relative composition as the burst subsided. The fission-gas release continued to decrease gradually over a period of two weeks, until it was about a factor of 3 less than before the hydrogen was added to the sweep gas.

This decrease of fission-gas release in a reducing atmosphere demonstrated that the increased fission-gas release during irradiation was due to oxidation of the UO_2. During this time it was obvious, from temperature relations, that the thin-plate sample had broken and perhaps crumbled, and the experiment was removed from the reactor. Postirradiation examination disclosed that the fuel was in fragments of 0.050 in. or smaller. This extreme fragmenting is not characteristic of irradiated UO_2 and was most likely due to a size change of the UO_2 during the reduction process.

Diffusion Calculations

One model[7] in common use for fission-gas diffusion in UO_2 involves the assumption that a porous body may be described in terms of uniform small spheres. The radius of these spheres is chosen so that the surface-area-to-volume ratio is the same as that measured in the fuel sample. This surface area is calculated from gas adsorption measurements and will account for internal surfaces that are directly connected to the external surface. The surface area measured in this manner may be orders of magnitude larger than the geometric surface (calculated from the dimensions of the fuel sample). The fission gas is assumed to diffuse through the UO_2 until it encounters the surface of the sphere, and it is then released instantaneously through the interconnected porosity. Any calculations of

[7] J. D. Eichenberg et al., Effects of Irradiation on Bulk UO_2, WAPD-183, p 26–28 (October 1957).

diffusion coefficients based upon this model are highly dependent upon the surface-area determination.

The above model was not used to calculate the diffusion coefficients for the thin-plate, high-density UO_2 used in this experiment, because the surface area measured by gas adsorption methods was only four times larger than the geometric area, and the diameter of the equivalent sphere was nearly equal to the thickness of the plate. Because of this, an infinite slab model was selected in which the plate was considered to be a homogeneous structure with negligible edge losses. A time-dependent solution for the evolution of gaseous fission products from a thin plate, neglecting edge losses, has been developed by Litz.[8] When the sample is irradiated at constant conditions for a time greater than four half-lives of the isotope measured, this solution is no longer time dependent and becomes

$$D = \frac{a^2}{4} \lambda T^2 \quad , \tag{4}$$

where

D = diffusion coefficient, cm^2/sec,

a = plate thickness, cm,

λ = decay constant of isotope,

T = fractional release rate of isotope.

Diffusion coefficients were calculated for Kr^{88} by using the slab model, and these data are presented in Fig. 10. The diffusion coefficients for Xe^{135} were not given in Fig. 10 since it was apparent that a large fraction of the Xe^{135} escaped from the fuel as I^{135}. The parent of Kr^{88} is Br^{88}, which has a 15-sec half-life. This is short enough to neglect Br^{88} diffusion. The diffusion coefficients show a reasonable temperature dependence, but they are more than four orders of magnitude larger than those measured for samples A and B, as shown in Fig. 10. Diffusion coefficients calculated for xenon and krypton for samples A and B were of the same order of magnitude. These calculations did not include a correction for the xenon that was released from plated iodine. The activation energy for the release of Kr^{88} from the oxidized UO_2 is 30 kcal/mole.

---

[8] L. M. Litz, Diffusion Equation for Radioactive Species in Thin-Plate Nuclear Reactors, LRL-97, p 8 (March 1954).

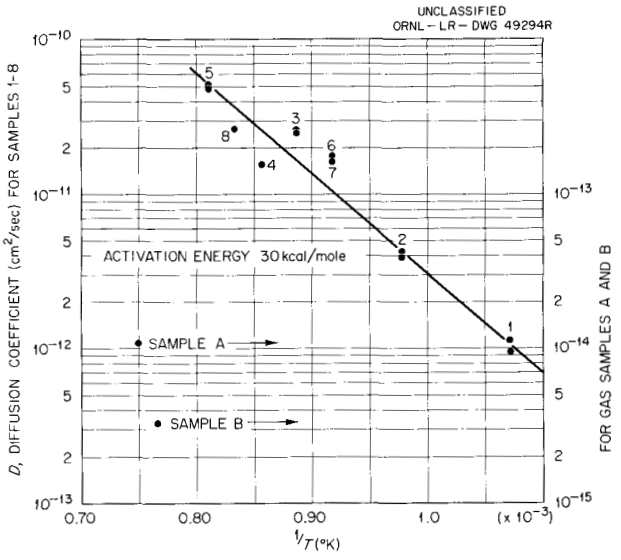

Fig. 10. Diffusion Coefficient Values for Kr^{88} from UO_2 Sample.

INTERNAL DISTRIBUTION

1. C. E. Center
2. Biology Library
3. Health Physics Library
4-5. Central Research Library
6. Reactor Library
7-26. Laboratory Records Department
27. Laboratory Records, ORNL R.C.
28. A. M. Weinberg
29. L. B. Emlet (K-25)
30. J. P. Murray (Y-12)
31. J. A. Swartout
32. E. H. Taylor
33. E. D. Shipley
34. D. S. Billington
35. M. L. Nelson
36. W. H. Jordan
37. C. P. Keim
38. J. A. Lane
39. J. H. Frye, Jr.
40. R. S. Livingston
41. S. C. Lind
42. F. L. Culler
43. A. H. Snell
44. A. Hollaender
45. M. T. Kelley
46. K. Z. Morgan
47. T. A. Lincoln
48. A. S. Householder
49. C. S. Harrill
50. C. E. Winters
51. H. E. Seagren
52. D. Phillips
53. A. J. Miller
54. J. T. Howe
55. R. A. Charpie
56. G. E. Boyd
57. M. J. Skinner
58. H. G. MacPherson
59. C. J. McHargue
60. F. W. Young, Jr.
61. C. D. Baumann
62-91. R. M. Carroll
92. O. Sisman
93. A. J. Taylor
94. D. F. Toner
95. D. B. Trauger
96. J. G. Morgan
97. M. T. Morgan
98. H. F. McDuffie
99. F. H. Neill
100. J. L. Scott
101. W. B. Cottrell
102. M. M. Yarosh
103. T. Hikido
104. P. G. Lafyatis
105. W. D. Manly
106. P. E. Regan
107. A. E. Goldman
108. E. Storto
109. R. G. Berggren
110. C. D. Bopp
111. W. E. Brundage
112. J. H. Crawford, Jr.
113. D. K. Holmes
114. M. F. Osborne
115. W. W. Parkinson
116. H. E. Robertson
117. F. J. Carlsen
118. J. H. Coobs
119. W. O. Harms
120. H. W. Savage
121. A. P. Fraas
122. G. W. Keilholtz
123. W. E. Browning
124. G. W. Parker
125. R. J. Beaver
126. J. E. Cunningham
127. J. A. Cox
128. C. D. Cagle
129. R. V. McCord
130. P. M. Reyling
131. G. C. Williams
132. R. S. Cockreham
133. Harvey Brooks (consultant)
134. N. Cabrera (consultant)
135. R. S. Sproull (consultant)
136. D. Turnbull (consultant)
137. ORNL – Y-12 Technical Library, Document Reference Section

EXTERNAL DISTRIBUTION

138. Division of Research and Development, AEC, ORO
139. C. L. Stiehl, Convair Division of General Dynamics Corporation, San Diego
140. R. N. Little, ANP Project Office, Fort Worth
141-144. General Electric Company, Vallecitos (1 copy each to F. J. Brutschy, B. Weidenbaum, R. N. Osborn, and T. J. Slosek)
145-146. Knolls Atomic Power Laboratory (1 copy each to J. Belle and B. Lustman)
147-148. Brookhaven National Laboratory (1 copy each to D. H. Gurinsky and F. J. Salzano)
149-150. Battelle Memorial Institute (1 copy each to B. W. Dunnington and F. A. Rough)
151. J. Brinkman, Atomics International
152. W. R. DeBoskey, Westinghouse Atomic Power Division
153. J. H. Kittel, Argonne National Laboratory
154. C. N. Spalaris, General Electric Company, San Jose
155. M. J. Whitman, U.S. Atomic Energy Commission, Washington
156-749. Given distribution as shown in TID-4500 (16th ed.) under Chemistry category (75 copies—OTS)