MARTIN MARIETTA ENERGY SYSTEMS LIBRARIES
3 4456 0364235 1

CENTRAL RESEARCH LIBRARY
DOCUMENT COLLECTION

ORNL-3064
UC-26 - Technology - Raw Materials

RECOVERY OF URANIUM FROM AMINE EXTRACTANTS WITH AMMONIUM CARBONATE

F. J. Hurst
D. J. Crouse

CENTRAL RESEARCH LIBRARY
DOCUMENT COLLECTION
LIBRARY LOAN COPY
DO NOT TRANSFER TO ANOTHER PERSON
If you wish someone else to see this document, send in name with document and the library will arrange a loan.

OAK RIDGE NATIONAL LABORATORY
operated by
UNION CARBIDE CORPORATION
for the
U.S. ATOMIC ENERGY COMMISSION

Printed in USA. Price $0.50. Available from the

Office of Technical Services
Department of Commerce
Washington 25, D.C.

LEGAL NOTICE

This report was prepared as an account of Government sponsored work. Neither the United States, nor the Commission, nor any person acting on behalf of the Commission:

A. Makes any warranty or representation, expressed or implied, with respect to the accuracy, completeness, or usefulness of the information contained in this report, or that the use of any information, apparatus, method, or process disclosed in this report may not infringe privately owned rights; or

B. Assumes any liabilities with respect to the use of, or for damages resulting from the use of any information, apparatus, method, or process disclosed in this report.

As used in the above, "person acting on behalf of the Commission" includes any employee or contractor of the Commission, or employee of such contractor, to the extent that such employee or contractor of the Commission, or employee of such contractor prepares, disseminates, or provides access to, any information pursuant to his employment or contract with the Commission, or his employment with such contractor.

ORNL-3064

Contract No. W-7405-eng-26

CHEMICAL TECHNOLOGY DIVISION

Chemical Development Section C

RECOVERY OF URANIUM FROM AMINE EXTRACTANTS WITH AMMONIUM CARBONATE

F. J. Hurst and D. J. Crouse

DATE ISSUED

FEB 1 5 1961

OAK RIDGE NATIONAL LABORATORY
Oak Ridge, Tennessee
Operated by
UNION CARBIDE CORPORATION
for the
U. S. ATOMIC ENERGY COMMISSION

MARTIN MARIETTA ENERGY SYSTEMS LIBRARIES

3 4456 0364235 1

ABSTRACT

An economical process was developed through bench-scale for recovering uranium from amine extractants with ammonium carbonate solution. By recycling the strip solution to allow buildup in the concentration of ammonium sulfate (formed in the stripping reactions) to 1-2 M, the solubility of uranium in the aqueous phase was limited to <5 g/liter and ammonium uranyl tricarbonate (AUT) precipitated in the stripping system. The AUT, which settled and filtered rapidly, was readily converted to U_3O_8 by calcination at 500°C, yielding a high assay (>97% U_3O_8) concentrate virtually free of sodium, molybdenum, and vanadium.

Estimated reagent costs for the stripping-precipitation step were 7¢ per pound of U_3O_8.

CONTENTS

		Page
1.0	Introduction	4
2.0	Solubility of Ammonium Uranyl Tricarbonate	4
3.0	Calcination of Ammonium Uranyl Tricarbonate	6
4.0	Proposed Process	6
5.0	Continuous Tests	8
	5.1 Recovery of Uranium from Bleed Solution	17
6.0	Reagent Costs	18
7.0	References	19

1.0 INTRODUCTION

This report describes development of an economical stripping flowsheet for the amine extraction (Amex) process,[1,2] which produces a high assay uranium concentrate virtually free of sodium, molybdenum, and vanadium. The concentrate should be highly amenable to the direct reduction-hydrofluorination-fluorination process[3,4] for producing UF_6 used in the Allied Chemical Company feed plant.

Uranium is precipitated directly from the solvent as ammonium uranyl tricarbonate (AUT) by contacting the amine extract with an ammonium carbonate--ammonium sulfate solution saturated with uranium. In principle, the stripping procedure is identical to that developed previously[5] for recovering uranium from di(2-ethylhexyl)phosphoric acid (Dapex) extractant except that the latter system contained no sulfate. The effects of ammonium carbonate and ammonium sulfate concentrations on uranium solubility were first determined, and then a series of bench-scale continuous tests was made to define optimum operating conditions. Reagent costs were estimated on the basis of the continuous tests.

This stripping method is also applicable to the recovery of uranium from organophosphorus esters, e.g., TBP, phosphonates. Results of studies of these systems will be reported separately.

Analyses were made by the Y-12 Section of the Analytical Chemistry Division under the direction of C. D. Susano.

2.0 SOLUBILITY OF AMMONIUM URANYL TRICARBONATE (AUT)

When amines are stripped of uranium with ammonium carbonate solution, ammonium sulfate is formed by reaction with amine sulfate--uranyl sulfate (see equations on p.8). The ammonium sulfate concentration in the strip solution builds up when it is recycled. The solubility of AUT is dependent on the total solute (ammonium carbonate plus ammonium sulfate) concentration, and thus AUT can be salted out with relatively low concentrations of ammonium carbonate. In batch solubility studies in which the ammonium carbonate concentration was maintained constant at 0.5 M, the uranium solubility decreased from ~4.5 to ~1 g/liter as the ammonium sulfate concentration was increased from 0.5 to 2 M (Fig. 2.1). The dependence of the solubility on the total solute concentration was essentially identical to that reported previously[5] for the simple ammonium carbonate system. In tests in which the total solute concentration was held constant at 2 M, the uranium solubility was ~1.4 g/liter and increased <10% as the ammonium

carbonate concentration was varied from 0.2 to 0.8 M:

Concentration, M		Uranium Solubility, g/liter
$(NH_4)_2CO_3$	$(NH_4)_2SO_4$	
0.2	1.8	1.35
0.4	1.6	1.39
0.6	1.4	1.46
0.8	1.2	1.47

These tests were made by shaking excess solid AUT with ammonium carbonate—ammonium sulfate solutions at 25°C. The ammonium carbonate solutions were prepared by adding sufficient ammonium hydroxide to a solution of commercial ammonium carbonate to give an ammonium/carbonate ratio of 2/1. Equilibrium was reached fairly rapidly in the solubility tests since analyses at 1, 7, and 10 days were nearly identical. These solubility values are slightly lower than those obtained in continuous runs (Sec. 5.0), indicating that equilibrium was not reached in the relatively short contact times of the continuous tests.

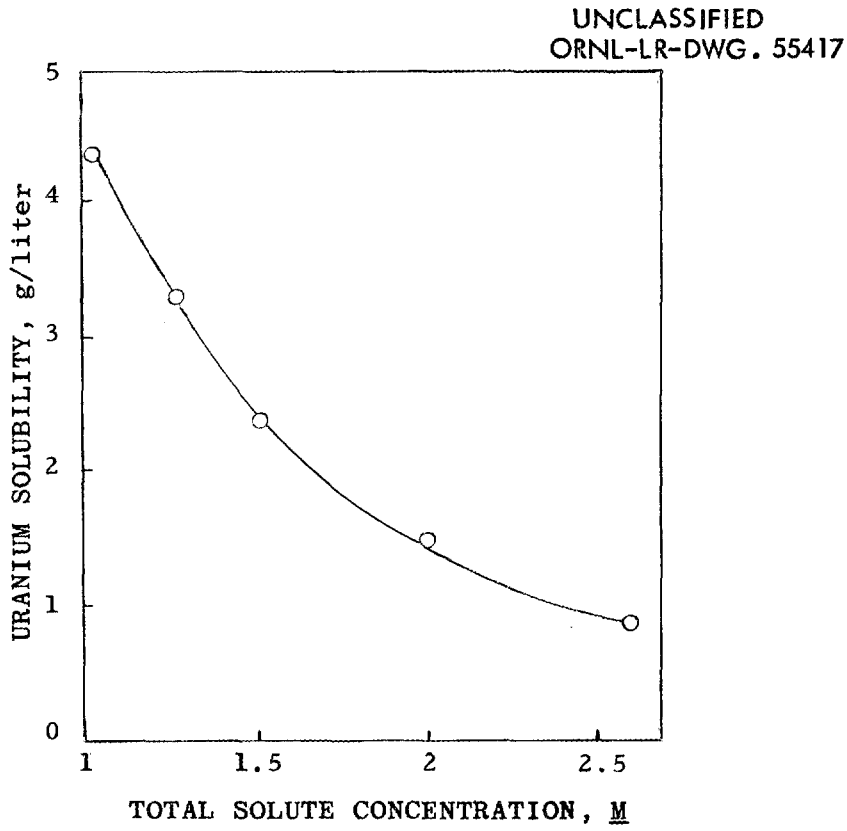

Fig. 2.1. Solubility of AUT in $(NH_4)_2CO_3$—$(NH_4)_2SO_4$ solutions at 25°C. $(NH_4)_2CO_3$ concentration held constant at 0.5 M and $(NH_4)_2SO_4$ concentration varied from 0.5 to 2 M.

3.0 CALCINATION OF AMMONIUM URANYL TRICARBONATE

Earlier work[5] showed that ammonium uranyl tricarbonate was readily decomposed to uranium oxide by calcination. Heating for 1-2 hr at 250°C lowered the carbonate content of air-dried AUT (12.4% NH_3, 51.7% U_3O_8, 34.1% CO_3) below the specification limit (4% based on U_3O_8) for uranium concentrates (Table 3.1). Products containing >97% U_3O_8, <0.05% NH_3, and <0.5% CO_3 were obtained by calcination for 1-2 hr at 500°C. It should be noted that the AUT product from the Amex process would probably be contaminated to some extent with occluded ammonium sulfate, and a slightly higher calcination temperature (ammonium sulfate decomposes at 513°C) might be needed to eliminate sulfate.

Table 3.1 Thermal Decomposition of Ammonium Uranyl Tricarbonate[a]

Calcination Temp., °C	Time, hr	Final Color	Analysis, % U_3O_8	NH_3	CO_3
Air-dried	-	-	51.7	12.4	34.1
110	2	Yellow	54.6	12.0	32.7
	24	Light orange	72.3	2.5	15.1
250	1	Orange	90.1	1.4	2.2
	2	Orange	90.9	0.9	2.1
325	1	Orange-brown	94.6	0.3	1.4
	2.5	Orange-brown	94.1	0.2	1.4
400	1.25	Orange-brown	94.9	0.02	1.0
	2	Orange-brown	94.9	0.04	1.2
500	1	Black	97.3	0.02	0.40
	2	Black	98.2	0.02	0.28

[a]Same data as reported in ORNL-2952.

4.0 PROPOSED PROCESS

In the proposed process (Fig. 4.1), uranium is stripped from the extract in the first stripping stage and simultaneously precipitated as AUT by contact (organic-continuous mixing) with a recycle ammonium carbonate--ammonium sulfate solution saturated with uranium. The precipitate slurry is pumped from the bottom of the first-stage settler to a reservoir where the AUT settles rapidly and is pumped as a thick slurry to a filter. The filter cake is washed with a small volume of 1 M NH_4OH and calcined to remove ammonia and carbon dioxide. The filtrate and the supernatant from the settler are recycled to the first stripping stage after fortification with ammonia and carbon

UNCLASSIFIED
ORNL-LR-DWG 54569

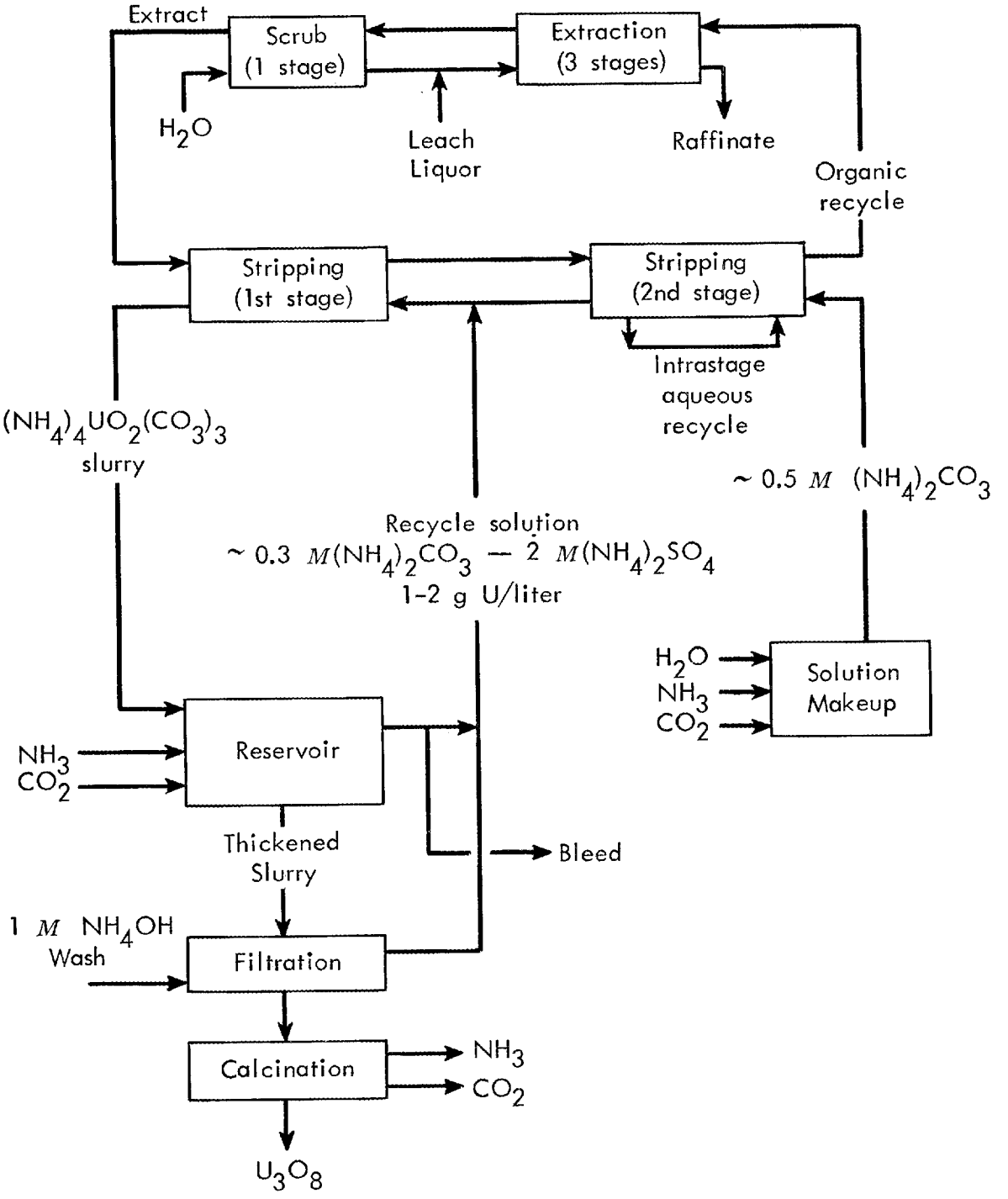

Fig. 4.1. Ammonium carbonate stripping process.

dioxide. Ammonium sulfate and molybdenum accumulate in the recycle solution and are removed in a small bleed stream, the amount of bleed being adjusted to control the ammonium sulfate concentration at a level (1.5-2 M) that limits uranium solubility (Sec. 2.0) to 1-2 g/liter. Dilute (~0.5 M) ammonium carbonate solution is fed at a low flow rate to the second stripping stage, the function of this stage being primarily to scrub entrained uranium from the solvent stream. In order to minimize aqueous entrainment in the recycle solvent, mixing in the second stage is controlled aqueous-continuous by recycling aqueous from the settler to the mixer.

Stoichiometric chemical requirements for stripping and precipitation are 1* mole of ammonia per mole of amine plus 6 moles of ammonia and 3 moles of carbon dioxide per mole of uranium recovered:

$$(R_3NH)_2UO_2(SO_4)_2 + 2NH_4OH + 3(NH_4)_2CO_3 \longrightarrow 2R_3N + \underline{(NH_4)_4UO_2(CO_3)_3} + 2(NH_4)_2SO_4 + 2H_2O \quad (1)$$

and

$$(R_3NH)_2SO_4 + 2NH_4OH \longrightarrow 2R_3N + (NH_4)_2SO_4 + H_2O \quad (2)$$

(The dotted underlines mark species in the organic phase). Requirements in practice are 5-10% higher than stoichiometric to compensate for losses to the bleed solution and by entrainment of strip solution in the solvent.

5.0 CONTINUOUS TESTS

Continuous tests were made in bench-scale mixer-settler equipment with synthetic leach liquors to demonstrate operational feasibility of the process and to establish reagent costs. Stripping was effective and, except for a minor problem which eventually was resolved, physical operation of the stripping circuit was satisfactory. Highly effective separation from molybdenum was obtained in the precipitation step.

In all tests the organic phase consisted of ~0.06 M Alamine 336** in kerosene modified with 2 vol % tridecanol. Presumably, other tertiary amines, e.g. Amberlite XE-204, tri(iso-octyl)-amine, and certain secondary amines, e.g. Amine S-24, Amberlite LA-1, would perform similarly, although ammonia consumption

*Neglects the possible presence of amine bisulfate salt, which would be small in amount when the amine is loaded with uranium.

**Tertiary amine (commercially available from General Mills) with mixed n-octyl and n-decyl alkyls.

would be slightly higher with the latter amine class owing to their lower uranium capacity.[1] Physical operation of the extraction circuit (3 stages) was satisfactory in all runs and low-uranium-concentration raffinates (<0.001 g of uranium per liter) were consistently obtained. Only a limited number of extraction data were obtained since the function of the extraction system was simply to provide extract for the stripping studies. Prior to stripping, the extract was scrubbed in a single stage with one-fifth its volume of water, primarily to remove any entrained liquor. The water scrub had the additional advantage of removing a small amount of extracted sulfuric acid from the solvent, which slightly decreased ammonia requirements for stripping.

Run 1 (~17 hr duration*). Uranium was >99.9% recovered from a synthetic feed liquor (containing, in grams per liter, 2.7 U, 1 V(IV), 0.12 Mo, 2 Fe(III), 1 Fe(II), 2 Al, 1 PO_4, and 30 SO_4 at pH 1) using liquor/organic/water scrub flow ratios of 1/1/0.2. Based on feed liquor and extract analyses, >90% of the molybdenum also was extracted.

The stripping system (Fig. 5.1) included two mixer-settler units and a reservoir for decanting the recycle solution from the AUT product and for dissolving makeup ammonia and carbon dioxide. Both the first stage settler and the reservoir had conical bottoms to facilitate discharge of solids. At startup the aqueous in the first stripping stage and in the reservoir was 0.25 M $(NH_4)_2CO_3$—1.25 M $(NH_4)_2SO_4$ solution which had been spiked with 10 g of molybdenum (added as ammonium molybdate) per liter in order to speed attainment of steady-state conditions. The ammonium carbonate concentration in the recycle solution was maintained in the range 0.25-0.35 M for the first half of the run and then increased to 0.65-0.8 M for the balance of the run. The sulfate concentration decreased from its initial value of 1.25 to 0.9 M at the conclusion of the run. Under these conditions, the uranium concentration in the recycle solution ranged 2.6-3.9 g/liter:

Run Time, hr	Analysis of Recycle Solution[a]				
	g/liter		M		
	U	Mo	NH_4	CO_3	SO_4
3	3.2	8.8	3.04	0.27	1.1
5	3.6	8.2	3.04	0.28	1.1
7	3.0	7.4	3.21	0.28	1.1
9	2.6	7.2	3.60	0.79	1.1
11	2.8	7.0	3.90	0.74	1.1
13	3.6	5.6	4.15	0.65	1.1
15	3.9	5.9	3.65	0.63	0.9
17	2.7	5.5	3.92	0.66	0.9

[a]pH range 8.7-9.4

*This was the total run time rather than the continuous span of the run since the system was operated only on the day shift.

UNCLASSIFIED
ORNL-LR-DWG 54570

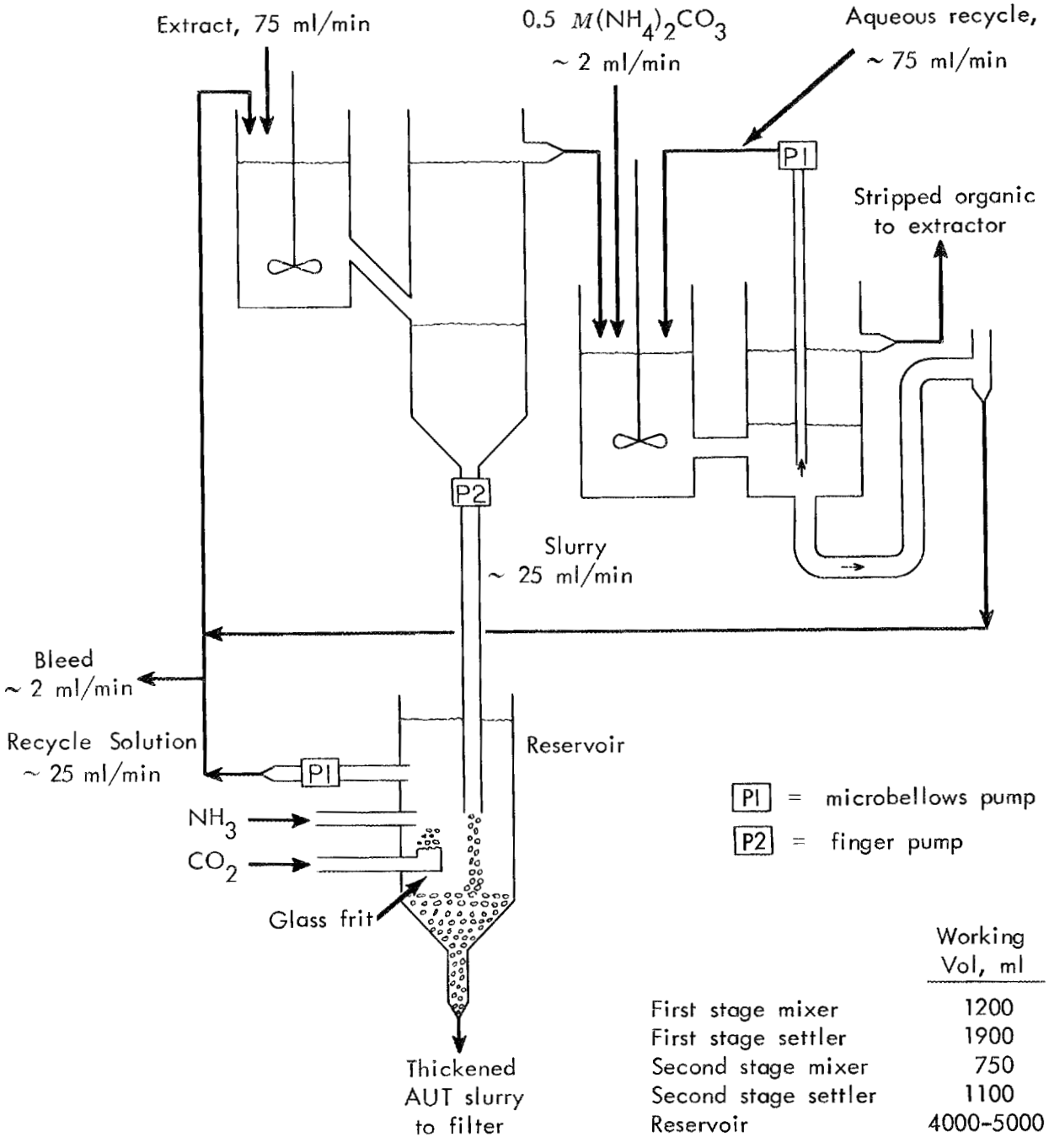

	Working Vol, ml
First stage mixer	1200
First stage settler	1900
Second stage mixer	750
Second stage settler	1100
Reservoir	4000-5000

Fig. 5.1. Stripping system for run 1.

Stripping of both uranium and molybdenum was essentially complete in the first stage, filtered organic samples from the settler analyzing <0.005 g/liter uranium and molybdenum. An appreciable fraction (5-10%) of the uranium precipitate, however, was carried into the second stage by the solvent. This precipitate, unlike the normal rapid-settling AUT, was of extremely fine particle size and was dispersed fairly uniformly in the organic phase. Analysis of the precipitate showed it was not AUT but rather a uranium ammonium sulfate precipitate containing some molybdenum:

	Precipitate Analysis, %
U	37.7
NH_3	12.6
SO_4	33.1
CO_3	1.0
Mo	1.6

Most of this precipitate dissolved in the aqueous phase in the second stripping stage but part of it accumulated in the solvent recycle line or was carried back into the extraction system. Although this did not adversely affect physical operation of the stripping circuit or recoveries in the extraction system, it was considered undesirable and considerable study (see runs 2 and 3) was subsequently directed toward eliminating the condition.

With the exception of the problem mentioned above, physical operation of the stripping circuit was highly satisfactory. The crystalline AUT settled and filtered rapidly and entrainment of solvent in the precipitate slurry was negligible. Results did not appear to be influenced at all by the relatively large variations in recycle solution composition and pH described above. The precipitate, after being washed with a small amount of 1 M NH_4OH and air-dried, contained ammonia, uranium, and carbonate in the mole ratios of 3.97/1/3.05. Calcination for 2 hr at 500°C yielded a product containing 99% U_3O_8 and only 0.01% Mo:

	Analysis, %	
	Air-Dried Product	Calcined Product
U	44.8	83.9 (99.0% U_3O_8)
NH_3	12.7	<0.01
CO_3	34.5	0.6
Mo	0.002	0.01
Fe	0.004	0.012
Al	-	0.015
V	-	0.023
PO_4	<0.02	<0.02
SO_4	0.13	0.23

Separation from molybdenum in the precipitation step was highly effective since the final product contained <0.3% of the molybdenum that entered the stripping system in the extract.

Run 2 (83 hr duration). Prior to run 2, the stripping system was drained and cleaned of precipitate. To simplify the system, molybdenum was omitted from the feed liquor (otherwise the liquor composition was the same as in run 1) and the recycle solution. The latter solution at startup contained 2.93 M NH_4, 0.53 M CO_3, and 1 M SO_4.

A number of variations were tried to minimize or prevent formation of the unwanted uranium ammonium sulfate precipitate described under run 1. For part of the run, mixing in the first stage was controlled aqueous-continuous by increasing the flow of recycle solution to 75 ml/min and raising the interface in the settler above the line connecting it to the mixer (to allow aqueous recycle through this line). Surprisingly, phase separation appeared no worse with aqueous-continuous mixing than had been obtained previously with organic-continuous, but entrainment of precipitate in the solvent was not decreased by this procedure. Decrease of the organic flow rate to 50 ml/min to increase residence time in the mixer, increasing the carbonate concentration (to ~1.5 M) and decreasing the sulfate concentration (to <0.2 M) in the recycle solution, and varying the recycle solution pH all had no appreciable affect on the amount of precipitate floated in the solvent.

Since batch tests indicated that the precipitate would redissolve in dilute ammonium carbonate if given sufficient time, attention was diverted to the second stripping stage. Removal of entrained precipitate from the solvent was incomplete when the aqueous feed to the second stage contained 0.25 M $(NH_4)_2CO_3$, 0.5 M $(NH_4)_2CO_3$, 0.5 M $(NH_4)_2CO_3$—0.3 M NH_4OH, or 0.5 M $(NH_4)_2CO_3$—0.5 M NH_4OH although redissolution of uranium appeared to be more efficient with the latter two solutions. Heating the second stage to 40-50°C was beneficial, as was adding a third stripping stage, but in all cases, a small amount of precipitate was still present in the solvent recycled to the extraction system. Best results were obtained in the two-stage system by greatly increasing the residence time in the second-stage mixer. This was done by adding several mixers in series to the original mixer. With a residence time (ambient temperatures) of 45-60 min instead of the original ~10 min, precipitate was essentially completely removed from the solvent, only a small amount of precipitate accumulating in the solvent recycle line. A considerable portion of the uranium precipitate that was dissolved from the solvent in the second stage reprecipitated as AUT and accumulated in the bottom of the second-stage settler, suggesting that a cone-bottom rather than a flat-bottom settler would be preferable for this stage.

Precipitate filtered from the first stage solvent was similar in analysis to that obtained in run 1 except that it, of course, contained no molybdenum:

	Precipitate Analysis, %
U	32.4
NH_3	14.5
SO_4	43
CO_3	0.7

Run 3 (25 hr duration). In batch contacts simulating the first stripping stage, no precipitate was found floating in the solvent even with contact times as low as 5 min. It was suspected that excessive recycle of organic from the settler to the mixer through the connecting line (Fig. 5.1) was severely limiting the aqueous residence time in the mixer. Consequently, in run 3, the mixer was replaced with an overflow type mixer of equivalent volume, giving a mixer residence time for both phases of ~18 min. This change completely eliminated formation of the troublesome precipitate, and physical performance throughout the run was satisfactory in all respects.

The feed liquor for run 3 had the same composition (2.7 g U and 0.12 g Mo per liter) as in run 1. Three different batches of product (Table 5.1) withdrawn from the system in this run contained >98% U_3O_8, <0.04% Mo, <0.005% V, <0.01% Fe, <0.3% NH_3, <1.2% SO_4, and <1.5% CO_3.

Table 5.1 Analysis of Uranium Products from Run 3

	Calcined (2 hr at 500°C) Product Analysis, %		
	1	2	3
U_3O_8	98.5	98.7	98.0
Mo	0.033	0.002	0.005
V	0.003	0.003	0.002
Fe	0.002	0.004	0.007
Al	0.01	<0.01	0.06
NH_3	<0.01	0.08	0.22
CO_3	0.25	1.4	0.35
SO_4	1.1	0.08	0.03
PO_4	0.034	0.033	0.023
HNO_3--insoluble U	0.0008	0.0002	0.0016
Loss on ignition (1000°C)	-	1.2	-

Run 4. A 51-hr demonstration run was then made using the overflow mixer in the first stripping stage and the equipment arrangement and solution flows shown in Fig. 5.2. Physical performance throughout the run was satisfactory and no formation of precipitate that floated in the organic was observed.

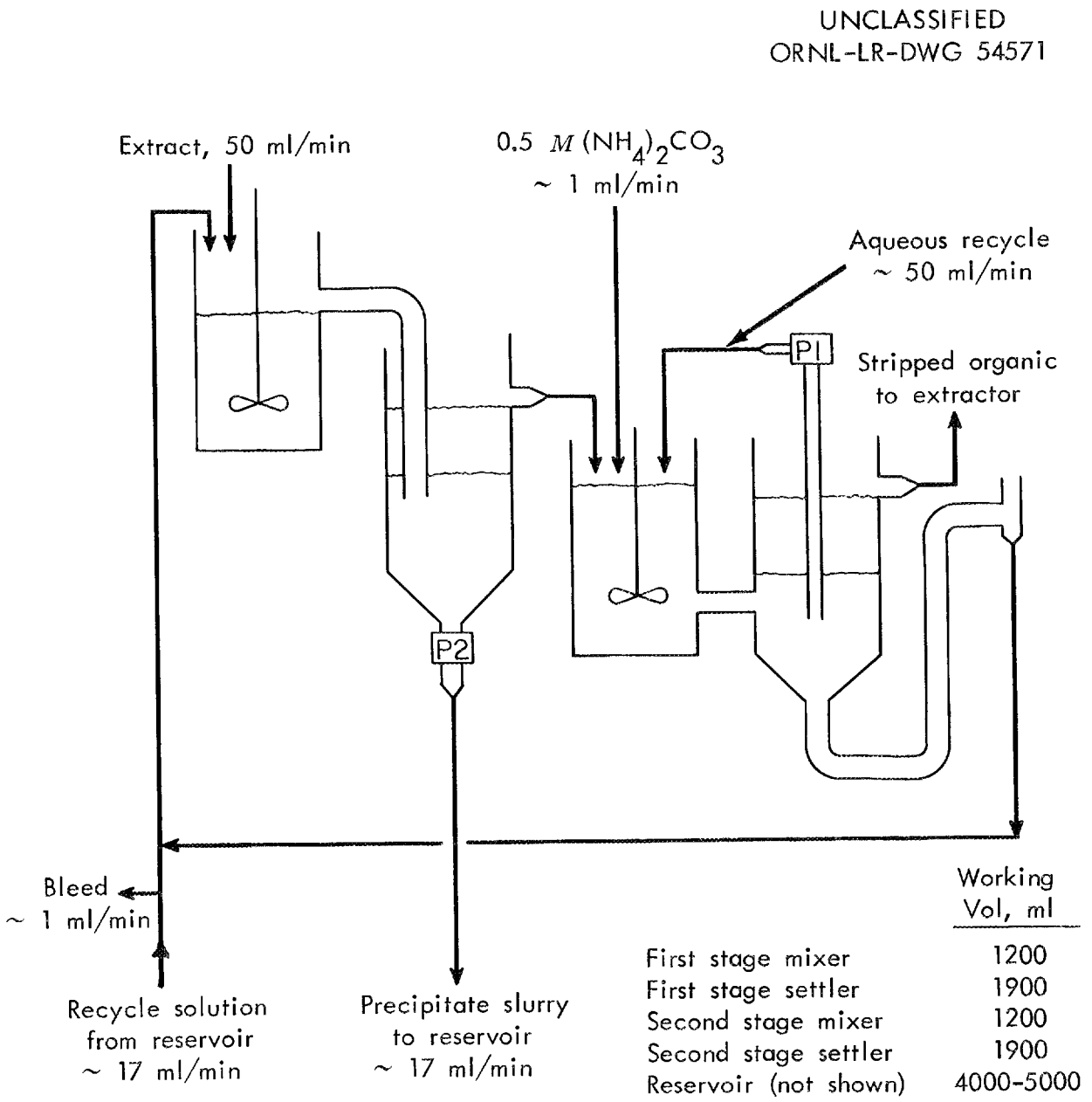

Fig. 5.2. Stripping system for run 4.

For the first 36 hr, the feed liquor was of the same composition (2.7 g U and 0.12 g Mo per liter) as in run 1 but, for the balance of the run, the molybdenum concentration was increased to 0.24 g/liter. All raffinate samples analyzed <0.0005 g of uranium per liter, equivalent to >99.9% uranium recovery.

The recycle solution at startup was 0.25 M $(NH_4)_2CO_3$--2 M $(NH_4)_2SO_4$ containing 10 g of molybdenum per liter. The bleed was set at ~1 ml/min (2% of the organic flow rate), which maintained the sulfate concentration in the range 1.7-2 M and limited the uranium concentration in the recycle solution to ~1.5 g/liter (Table 5.2). Stripping of uranium and molybdenum, based on analysis of filtered solvent samples, was essentially complete in the first stripping stage. Some uranium accumulated, however, in the second stripping stage, suggesting that the somewhat murky (due to entrainment of aqueous) solvent entering this stage may have contained a small amount of dispersed precipitate even though none was visible. The solvent leaving the second stripping stage was much clearer, showing decreased entrainment, and was apparently devoid of precipitate since there was no accumulation in the solvent recycle line. Aqueous entrainment in the solvent recycled to the extractor was estimated at only 1-3 ml/liter, so that loss of stripping reagent by this mechanism was negligible from a cost standpoint.

During part of the run, the temperature in the first stripping stage was maintained at ~40°C, which slightly improved physical operation and solvent clarity throughout the system.

Unlike the Dapex system, where slow accumulation of AUT as a tenacious scale on glass (but not Plexiglas) equipment was a problem, the AUT formed in the Amex system showed no tendency to adhere to either glass or plastic equipment.

The AUT product (Table 5.3), collected in three increments, contained >97% U_3O_8, <0.07% Mo, <0.005% V, <0.01% Fe, <0.01% NH_3, <0.3% CO_3, and <1.4% SO_4.

Table 5.3 Analysis of Products from Run 4

	Calcined (2 hr at 500°C) Product Analysis, %		
	1	2	3
U_3O_8	97.0	97.6	98.4
Mo	0.066	0.013	0.008
V	<0.005	<0.005	<0.005
Fe	0.002	0.003	0.005
Al	0.004	0.002	0.004
NH_3	<0.01	<0.01	<0.01
CO_3	0.08	0.16	0.29
SO_4	1.38	0.30	0.18
PO_4	0.031	0.044	0.039
HNO_3—insoluble U	0.00004	0.00005	0.00008
Loss on ignition (1000°C)	2.8	2.3	1.5

Table 5.2 Data for Continuous Run 4

Feed liquor: synthetic leach liquor containing g/liter, 2.7 U, 0.12-0.24 Mo, 1 V(IV), 2 Fe(III), 1 Fe(II), 2 Al, 1 PO_4, and 30 SO_4 at pH 1

Organic: 0.06 M Alamine 336 in kerosene + 2 vol % tridecanol

Liquor, organic, and water scrub flows of 50, 50, and 10 ml/min respectively; operation of strip circuit shown in Fig. 5.2

Sampled from	Run Time, hr	Organic Analysis, g/liter		Aqueous Analysis				
				g/liter		M		
		U	Mo	U	Mo	NH_4	CO_3	SO_4
Extraction System								
Stage 1	27	2.8	-	0.21	-	-	-	-
	51	2.8	-	0.17	-	-	-	-
Stage 2	27	0.29	-	0.035	-	-	-	-
	51	0.20	-	0.031	-	-	-	-
Stage 3	27	0.06	-	<0.0005[a]	-	-	-	-
	51	0.03	-	<0.0005	-	-	-	-
Scrub Stage	9	2.8	0.10	-	-	-	-	-
	18	2.8	0.10	-	-	-	-	-
	27	2.9	0.10	0.17[b]	0.003	-	-	0.036
	36	2.9	0.11	-	-	-	-	-
	42	3.0	0.24	-	-	-	-	-
	45	2.8	0.22	-	-	-	-	-
	48	2.8	0.22	-	-	-	-	-
	51	2.8	0.22	-	-	-	-	-
Stripping System								
Stage 1 (aqueous phase samples taken from reservoir)	9	0.008	<0.001	1.4	7.5	4.6	0.31	1.9
	18	0.010	<0.001	1.2	9.0	4.5	0.28	1.8
	27	0.001	<0.001	1.3	7.9	4.6	0.32	1.7
	36	0.002	<0.001	1.3	7.3	4.2	0.31	1.7
	45	0.001	<0.001	1.4	7.5	4.4	0.25	1.9
	51	0.001	<0.001	1.5	8.0	4.5	0.24	1.9
Stage 2	9	<0.001	<0.001	4.6	0.25	1.0	0.32	0.02
	18	<0.001	<0.001	8.4	0.56	1.5	0.46	0.23
	27	<0.001	<0.001	8.0	0.87	1.6	0.43	0.33
	36	<0.001	<0.001	8.5	0.96	1.7	0.42	0.37
	45	<0.001	<0.001	8.4	0.92	1.7	0.46	0.32
	51	<0.001	<0.001	8.1	1.06	1.7	0.42	0.35

[a]Other raffinate samples taken at 3,9,15,18,21,24,30,33,36,39,42,45, and 48 hr all analyzed <0.0005 g of uranium per liter.

[b]This sample also contained, g/liter: 0.05 V, 0.14 Fe, 0.06 Al, and 0.03 PO_4.

5.1 Recovery of Uranium from the Bleed Solution

The uranium in the bleed solution, which in run 4 was ~1% of the total uranium processed, must be recovered and separated from molybdenum. Good recoveries and favorable separation from molybdenum were obtained by boiling the bleed solution to selectively precipitate uranium or by acidifying the solution and passing it through a carbon column to adsorb molybdenum.

Boiling the Bleed Solution. Boiling the bleed solution until the pH dropped to ~7.5 precipitated 90% or more of the uranium but <15% of the molybdenum (Table 5.4). This precipitate, which settled and filtered rapidly, could be dissolved in the leach liquor and returned to the extraction circuit.

Table 5.4 Uranium Recovery from the Bleed Solution by Boiling

Solution	Boiling Time, min	pH	Supernatant Analysis, g/liter		Precipitated,[a] % of total	
			U	Mo	U	Mo
1 (from run 3)	Initial	9.6	1.05	8.1	-	-
	8	8.4	0.32	7.4	70	9
	15	8.4	0.04	8.0	96	<5
	25	7.3	0.29	8.1	72	<5
	30	6.3	0.004	6.9	>99	15
2 (from run 4)	Initial	8.7	1.25	9.1	-	-
	15	7.9	0.38	9.5	70	-
	20	7.8	0.25	8.1	80	11
	25	7.7	0.20	8.8	84	<5
	30	7.7	0.22	9.9	82	<5
	40	7.4	0.14	9.9	89	<5
3 (from run 4)	Initial	8.9	1.24	7.7	-	-
	20	8.2	0.41	7.7	67	<5
	30	7.9	0.16	7.7	87	<5
	40	7.5	0.07	7.2	94	6
	50	7.2	0.09	7.5	93	<5
4 (from run 4)	Initial	8.8	1.38	8.1	-	-
	20	8.0	0.06	6.5	96	20
	30	7.5	0.05	7.7	96	5
	40	7.0	0.36	7.4	74	9

[a]Based on head solution and supernatant analyses.

Adsorption of Molybdenum on Activated Carbon.[6] Effective recovery of uranium and separation from molybdenum was also obtained by acidifying the bleed solution with sulfuric acid and passing it through a column containing an 11-in. bed of 20 x 50 mesh Type OL activated carbon (Pittsburgh Coke and Chemical Co.). About 14 column volumes of acidified bleed solution (0.9 g U and 8.2 g Mo per liter, pH 1.5) were passed through the column. The molybdenum concentration in the effluent, which was less than 0.6 g/liter for the first 8 column volumes, increased to 1.3 and 3.9 g/liter after passage of 10 and 14 column volumes, respectively. The column, loaded to ~270 g Mo per kilogram of carbon, was washed with 2 column volumes of water. The total effluent (including the wash), which contained >96% of the uranium and only ~20% of the molybdenum, could be recycled to the extraction circuit. Molybdenum was eluted effectively from the column with 2 M NH_4OH. If desired, high-purity molybdic oxide could be recovered from the eluate by evaporation and calcination of the residue.

6.0 REAGENT COSTS

Based on data from the continuous runs, total reagent costs for the extraction and the stripping-precipitation steps are estimated at 9.6¢ per pound of U_3O_8, of which 7¢ per pound of U_3O_8 is for stripping-precipitation chemicals (Table 6.1). This estimate assumes the use of commercial carbon dioxide (5¢ per pound). The use of flue gases as a source of carbon dioxide offers a potential cost saving of ~2¢ per pound of U_3O_8. Recovery of stripping reagent from the calciner off-gases offers further potential for reducing reagent costs.

Table 6.1 Estimated Reagent Costs for Ammonium Carbonate Stripping

(Assumes treatment of a liquor containing 1.2 g of U_3O_8 per liter)

Chemical	Consumption	Consumption, lb/lb U_3O_8	Unit Cost, ¢/lb	Cost, ¢/lb U_3O_8
NH_3	Stripping	0.74	5.9	4.4
CO_2	Stripping	0.52	5	2.6
Alamine 336	Distribution to raffinate (<5 ppm)	<0.004	125	<0.5
Organic phase	Entrainment and spillage[a]	0.05 gal	42¢/gal[b]	2.1
			Total	9.6

[a]Entrainment and spillage estimated at 0.05% of raffinate volume.

[b]Based on kerosene cost of 14¢ per gallon and tridecanol cost of 23¢ per pound.

7.0 REFERENCES

1. D. J. Crouse and K. B. Brown, "Amine Extraction Processes for Uranium Recovery from Sulfate Liquors," ORNL-1959 (Nov. 18, 1955).

2. C. F. Coleman, K. B. Brown, J. G. Moore, and D. J. Crouse, "Solvent Extraction with Alkyl Amines," Ind. Eng. Chem., 50: 1756-62 (1958).

3. "Fluid Beds Simplify Hexafluoride Cleanup," Chemical Week, 87: 41-44 (July 9, 1960).

4. "Private Industry Shows How to Simplify UF_6 Output," Chem. Eng., 67: 70-72 (July 11, 1960).

5. F. J. Hurst and D. J. Crouse, "Recovery of Uranium from Di(2-ethylhexyl)phosphoric Acid (Dapex) Extractant with Ammonium Carbonate," ORNL-2952 (June 30, 1960).

6. K. B. Brown, "Progress Report on Raw Materials for December, 1957," ORNL-2486.

ORNL-3064
UC-26 Technology-Raw Materials
TID-4500 (16th ed.)

INTERNAL DISTRIBUTION

1. C. E. Center
2. Biology Library
3. Health Physics Library
4-5. Central Research Library
6. Reactor Division Library
7-26. Laboratory Records Department
27. Laboratory Records, ORNL R.C.
28. A. M. Weinberg
29. L. B. Emlet (K-25)
30. J. P. Murray (Y-12)
31. J. A. Swartout
32. E. H. Taylor
33. E. D. Shipley
34. M. L. Nelson
35-36. F. L. Culler
37. W. H. Jordan
38. J. B. Adams
39. J. H. Frye, Jr.
40. S. C. Lind
41. G. I. Cathers
42. A. Hollaender
43. F. F. Blankenship
44. M. T. Kelley
45. C. F. Coleman
46. R. S. Livingston
47. C. P. Keim
48. D. J. Crouse
49. C. E. Winters
50. A. D. Ryon
51. D. Phillips
52. F. R. Bruce
53. W. K. Eister
54. D. E. Ferguson
55. H. E. Goeller
56. R. A. Charpie
57. M. E. Whatley
58. M. J. Skinner
59. R. E. Blanco
60. G. E. Boyd
61. W. E. Unger
62. R. S. Cockreham
63. A. T. Gresky
64. E. D. Arnold
65. C. E. Guthrie
66. J. W. Ullmann
67. K. B. Brown
68. B. Weaver
69. J. C. Bresee
70. C. A. Blake
71. J. G. Moore
72. K. A. Allen
73. R. P. Wischow
74. W. D. Arnold
75. F. J. Hurst
76. F. G. Seeley
77. J. S. Drury
78. J. C. White
79. J. T. Long
80. R. E. Leuze
81. R. A. McNees
82. J. T. Roberts
83. J. R. Flanary
84. W. Davis
85. R. H. Rainey
86. E. M. Shank
87. J. O. Blomeke
88. C. D. Watson
89. W. H. Lewis
90. E. Lamb
91. W. R. Grimes
92. P. M. Reyling
93. D. L. Katz (consultant)
94. C. E. Larson (consultant)
95. J. H. Rushton (consultant)
96. I. Perlman (consultant)
97. T. H. Pigford (consultant)
98. H. Worthington (consultant)
99. ORNL - Y-12 Technical Library, Document Reference Section

EXTERNAL DISTRIBUTION

100. Division of Research and Development, AEC, ORO
101. H. L. Hazen, Farmer's Union Bldg., Denver, Colorado
102. M. E. Wadsworth, University of Utah
103-111. E. C. Van Blarcom, Division of Raw Materials, Washington
112-597. Given distribution as shown in TID-4500 (16th ed.) under Technology-Raw Materials category (75 copies - OTS)