MARTIN MARIETTA ENERGY SYSTEMS LIBRARIES
3 4456 0364256 5

CENTRAL RESEARCH LIBRARY
DOCUMENT COLLECTION

ORNL-3093
UC-4 - Chemistry

IN-PILE MEASUREMENT OF THE ELECTRICAL RESISTIVITY AND THERMOELECTRIC POWER OF SINTERED UO_2

M. D. Karkhanavala
R. M. Carroll

CENTRAL RESEARCH LIBRARY
DOCUMENT COLLECTION
LIBRARY LOAN COPY
DO NOT TRANSFER TO ANOTHER PERSON
If you wish someone else to see this document, send in name with document and the library will arrange a loan.

OAK RIDGE NATIONAL LABORATORY
operated by
UNION CARBIDE CORPORATION
for the
U.S. ATOMIC ENERGY COMMISSION

Printed in USA. Price $0.50. Available from the

Office of Technical Services
Department of Commerce
Washington 25, D.C.

LEGAL NOTICE

This report was prepared as an account of Government sponsored work. Neither the United States, nor the Commission, nor any person acting on behalf of the Commission:

A. Makes any warranty or representation, expressed or implied, with respect to the accuracy, completeness, or usefulness of the information contained in this report, or that the use of any information, apparatus, method, or process disclosed in this report may not infringe privately owned rights; or

B. Assumes any liabilities with respect to the use of, or for damages resulting from the use of any information, apparatus, method, or process disclosed in this report.

As used in the above, "person acting on behalf of the Commission" includes any employee or contractor of the Commission, or employee of such contractor, to the extent that such employee or contractor of the Commission, or employee of such contractor prepares, disseminates, or provides access to, any information pursuant to his employment or contract with the Commission, or his employment with such contractor.

ORNL-3093
UC-4 — Chemistry
TID-4500 (16th ed.)

Contract No. W-7405-eng-26

SOLID STATE DIVISION

IN-PILE MEASUREMENT OF THE ELECTRICAL RESISTIVITY AND THERMOELECTRIC POWER OF SINTERED UO_2

M. D. Karkhanavala
R. M. Carroll

DATE ISSUED

APR 17 1961

OAK RIDGE NATIONAL LABORATORY
Oak Ridge, Tennessee
operated by
UNION CARBIDE CORPORATION
for the
U.S. ATOMIC ENERGY COMMISSION

MARTIN MARIETTA ENERGY SYSTEMS LIBRARIES

3 4456 0364256 5

IN-PILE MEASUREMENT OF THE ELECTRICAL RESISTIVITY AND THERMOELECTRIC POWER OF SINTERED UO_2

M. D. Karkhanavala R. M. Carroll

ABSTRACT

Two thin plates of high-density UO_2 were sandwiched together with thermocouples between them and pressed against the outer surfaces. The thermocouples were used as electrodes and the electrical resistivity of the UO_2 measured by the potential drop method using corresponding arms of the thermocouples as current lead-in wires and potential probes. The UO_2 was heated by its own fission heat and the electrical resistivity measured at temperatures from 50 to 972°C. Preirradiation measurements were made using an electric furnace to obtain temperatures to 750°C.

Electrical resistivity did not change with irradiation up to about 10^{18} nvt, at which point the resistivity decreased by a factor of 3. The resistivity ranged from 8.75×10^3 ohm-cm at room temperature (before irradiation) to 0.4 ohm-cm at 773°C (after nvt $> 10^{18}$). The activation energy was 0.5 ev during irradiation as compared with 0.65 ev before irradiation.

The temperature between the plates was higher than the outside temperature during irradiation. This thermal gradient created a thermoelectric emf between the UO_2 and the platinum thermocouples. The thermoelectric emf for the Pt-UO_2-Pt system ranged from 130 μv/°C at 162°C to 29 μv/°C at 900°C. The UO_2 behaved like an n-type conductor during irradiation.

INTRODUCTION

The electrical conductivity of unirradiated UO_2 has been measured by several investigators, and a comprehensive survey of the literature is given by Willardson *et al.*[1] The need for good measurements of electrical conductivity, particularly at high temperatures, has been emphasized,[2]

---

[1] R. K. Willardson, J. W. Moody, and H. L. Goering, The Electrical Properties of Uranium Oxides, BMI-1135 (September 1956).

[2] S. Aronson and J. Belle, J. Chem. Phys. 29, 151 (1958).

not only because of their intrinsic value in understanding the behavior of UO_2 as a semiconductor, but also because of their bearing on achieving an understanding of the oxidation of UO_2 and UO_2-ThO_2 solid solutions. It is of equal interest to study the effects of neutron irradiation on the electrical conductivity. It would be of considerable advantage to make measurements during irradiation, since ionization produced by fission fragments might affect the free carrier density. There have been no reports so far in the open literature on in-pile or postirradiation measurements of the electrical conductivity of UO_2.

Willardson et al.[1] studied the thermoelectric power and electrical conductivity of UO_2 cylinders as a function of the O/U ratio in the temperature range from room temperature to about 750°C. From these measurements they deduced the phase equilibrium diagram in the system UO_2-O_2. The thermoelectric power was measured for the couple Alumel-UO_2-Alumel. It was observed that the specimens in the as-prepared states were p-type semiconductors and became n-type as the O/U ratio was increased. Also, minima and maxima in the thermoelectric power were observed for different UO_{2+x} sintered pellets in the temperature range 180–340°C, depending upon the carrier type and O/U ratio.

Aronson and Belle[2] and Aronson and Clayton[3] studied respectively the electrochemical systems Fe, FeO | (CaO + ZrO_2) | UO_{2+x} , Pt and Fe, FeO | (CaO + ZrO_2) | ($U_{1-y}Th_yO_{2+x}$), Pt and therefrom measured the emf of the half cells (UO_{2+x}), Pt and ($U_{1-y}Th_yO_{2+x}$), Pt in the temperature range 1150–1350°K. From these data they deduced the thermodynamical properties of the system UO_2-O_2 and ($UThO_2$)-O_2.

In the present study, in-pile measurements of the electrical resistivity of UO_2 and of the thermoelectric power of the system Pt-UO_2-Pt have been made in the range 150–1150°C up to an integrated flux of about 0.2×10^{20} nvt. The results reported here are of a preliminary nature, as further work is in progress.

EXPERIMENTAL

The in-pile measurements were made in the C-1 facility of the Oak Ridge Research Reactor. This facility was designed primarily for studies

---

[3]S. Aronson and J. C. Clayton, J. Chem. Phys. 32, 749 (1960).

of fission gas release from bare fuel plates of UO_2 and has been described in detail by Carroll and Baumann.[4] The facility permits an accurately controlled insertion of the fuel specimen into the reactor core so that studies can be made at different flux levels. The fuel specimen is heated by its own fission heat, and any desired temperature can be obtained. At a given flux position, a wide range of fuel temperatures (about 600°C) can be achieved by the independent variations of a cooling air flow and the nature of the sweep gas.

The UO_2 fuel specimens used in this facility are usually in the form of flat, very thin platelets (approaching the geometry of an infinite slab) with thermocouples positioned on either side. This fuel configuration has been used in attempts to determine the thermal conductivity of UO_2 by measuring the temperature gradients through the plates.[4] It seemed desirable to take further advantage of the existing facility and fuel configuration to measure the electrical resistivity.

Because the prime purpose of the experiment is the study of continuous fission gas release, all experimental work on additional properties had to be such as would not interfere with the main aim. The need to make good contact between the UO_2 and the electrode was recognized and different methods were tried. The coating of a large area of the fuel plate, or the use of large contacts, could not be permitted since they might interfere with fission gas release. Attempts to utilize small vacuum-deposited coatings of platinum were not successful. The method of painting metallic paints and firing at high temperatures was not used because of the likely effects on the O/U ratio of the sintered plates. Tight-fitting metallic casings could not be used because the differential temperature expansion between the UO_2 and the casing would probably break the thin plates.

After considering all the various possibilities, it was decided to use spring-loaded thermocouples which would yield to the thermal expansion of the UO_2 and yet make good contact at all times. Of the methods

---

[4]R. M. Carroll and C. D. Baumann, Experiment on Continuous Release of Fission Gas During Irradiation, ORNL-3050 (February 1961).

available for measurement of electrical resistivity, the potential-drop method was chosen, as it would eliminate the need to know the precise variation of the resistivity of the lead wires. The corresponding arms of the thermocouples were used as the current lead-in wires and potential probes. The thermocouples were also used to measure the temperature of the UO_2. This method, from the results obtained so far, seems to have worked reasonably well, but it cannot be regarded as completely satisfactory. The contacts are susceptible to possible mechanical vibrations. The possibility of increasing the number of springs as well as of having a spring-loaded knife-edge contact is being considered.

Figure 1 shows the arrangement of the specimens and thermocouples as fully assembled. Two sintered UO_2 plates 1 × 0.5 × 0.040 in. were

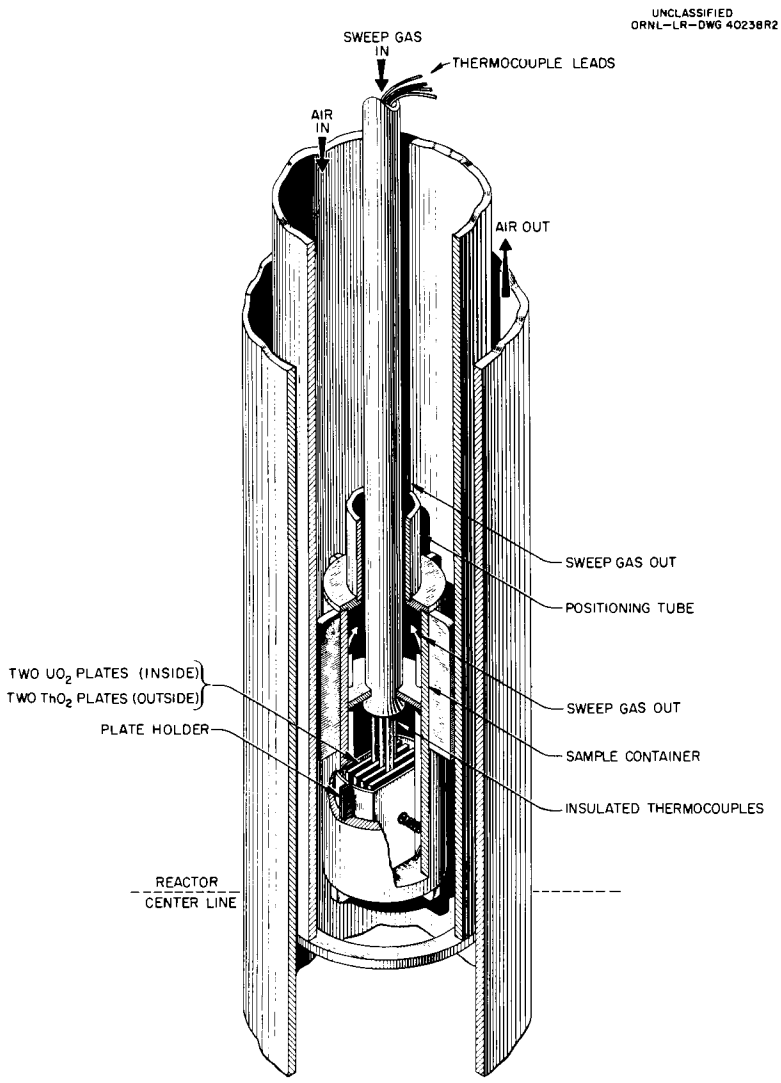

Fig. 1. Thin-Plate Samples Positioned in Facility Tube.

placed between two sintered ThO_2 plates on the side and supported on another ThO_2 plate at the bottom. These were secured in an Inconel holder, which could slide into a larger Inconel capsule. Two thermocouples, which also served as electrical lead wires, were located on one plate as nearly opposite each other as was possible. The other center thermocouple, on the second UO_2 plate, was slightly displaced (Fig. 2a and b). All the thermocouples were, however, located at the same height. This was achieved by cutting open the ceramic (Al_2O_3) thermocouple sheath at the side at equal distances from one end, pulling the thermocouple wire through the opening, and spot-welding the couples (Fig. 2c). The thermocouples were pressed tightly against the UO_2 surface by means of tungsten springs which acted on the ThO_2 plates and through these on the thermocouples. The ThO_2 plates were used to study certain aspects of fission gas release and were not pertinent to the measurement of electrical resistivity or thermoelectric power.

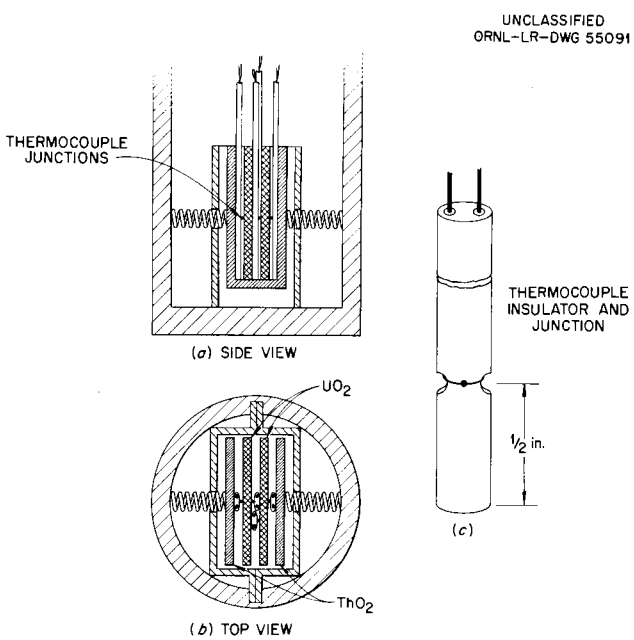

Fig. 2. Location of Thermocouples Between Plates.

The circuit used for making the measurements is shown in Fig. 3. For the sake of simplicity, only one UO_2 plate is shown, and some of the switches used to convert from electrical to temperature measurements are not shown. The potential drop across the UO_2 plate and the thermoelectric emf were measured on a Leeds and Northrup K_2 potentiometer and in favorable ranges also directly recorded on a 10-mv-span Honeywell-Brown recorder. The current was read directly on a 0–100 μa Weston ammeter as well as recorded. Two DPDT switches enabled the reversal of the polarity of the superimposed emf and the measurement of the emf across the plate in both positions.

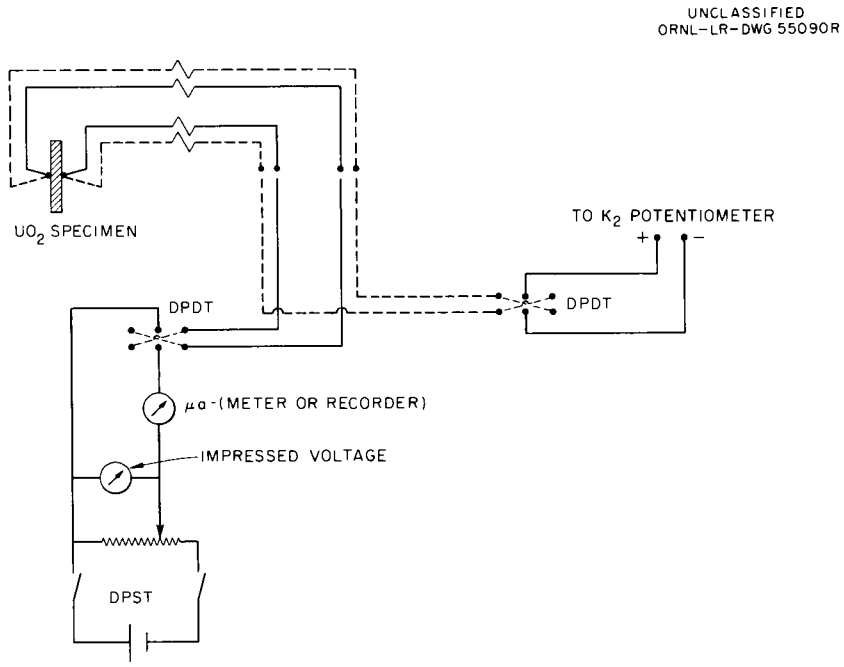

Fig. 3. Circuit for Measurement of Electrical Resistivity and Thermoelectric Power.

RESULTS AND CONCLUSIONS

The fission heat and to some extent the gamma heat produced the elevated temperatures in the in-pile runs. For any given position in the neutron flux field and for any given flow rate of the cooling air stream, the temperatures remained constant within ±5°C over prolonged periods. However, because of the geometry of the two fuel plates, the temperatures between the plates were always higher than on the outside. This temperature gradient generated the thermoelectric emf.

The electrical resistivity of the sample was measured prior to installation in the reactor, after assembling and leak testing the entire experiment. A small Nichrome-wound furnace was placed around the capsule to obtain elevated temperatures. During these measurements, a helium purge was maintained to exclude oxygen from the system and prevent the oxidation of the UO_2. The results of this out-of-pile measurement are tabulated in Table 1 and summarized in Fig. 4.

Table 1. Out-of-Pile Measurement of Electrical Resistivity

Temperature (°K)	Reciprocal Temperature [(°K)$^{-1}$]	ρ, Resistivity (ohm-cm)
	$\times 10^{-3}$	
294	3.40	8750
463	2.16	28.7
473	2.11	26.7
663	1.51	19.34
678	1.47	16.77
708	1.41	13.31
723	1.38	13.92
813	1.23	6.74
958	1.04	2.81
1023	0.98	1.92

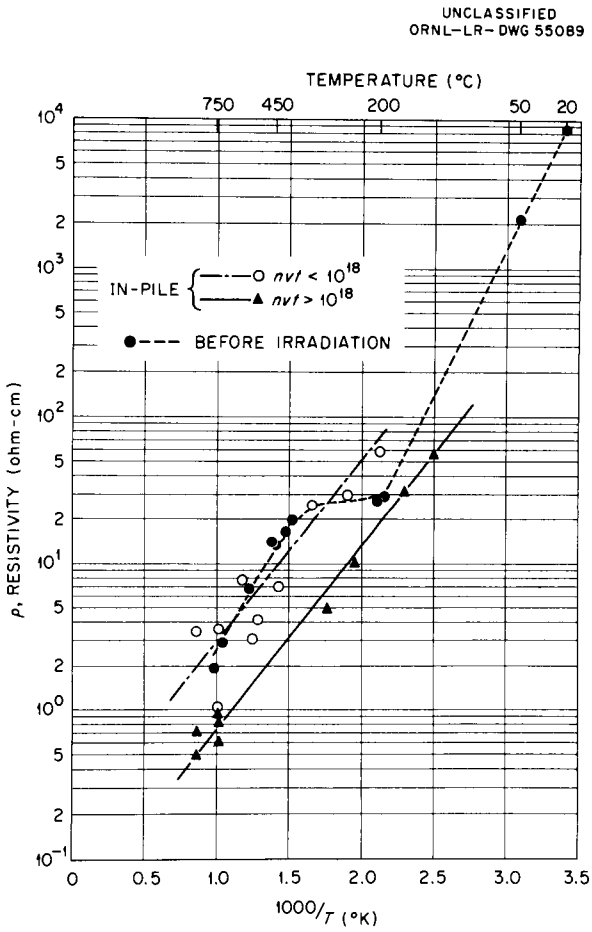

Fig. 4. Electrical Resistivity of UO_2 as a Function of Temperature.

It was found during in-pile testing that superimposition of the thermoelectric emf on the potential drop across the UO_2 plate made measurements more difficult, particularly at higher temperatures. At temperatures in excess of about 600–700°C, the thermoelectric emf was equal to or greater than the potential drop, and hence the results obtained by reversing the current flow were highly divergent. Attempts were made to utilize this thermoelectric emf to measure the resistance of the UO_2 plates, using the classical method for measuring the internal resistance of a battery. The results of the in-pile resistivity measurements and thermoelectric power are tabulated in Tables 2 and 3. The in-pile resistivity data are also plotted in Fig. 4. An apparent discrepancy in the temperature measurements from one of the thermocouples was detected, which has introduced some uncertainty in the ΔT measurements.

A major difficulty encountered in the in-pile measurements, not encountered in

Table 2. In-Pile Measurement of Resistivity

Temperature (°K)	Reciprocal Temperature [(°K)$^{-1}$]	ρ, Resistivity (ohm-cm)
	$\times 10^{-3}$	
	nvt = 0	
323	3.09	2080
	nvt < 10^{18}	
473	2.11	58.5
525	1.9	29.5
608	1.65	24.3
693	1.44	7.3
778	1.29	4.4
803	1.25	3.1
856	1.17	7.7
976	1.03	3.6
993	1.01	1.1
1113	0.90	7.15
1123	0.88	5.9
1123	0.88	1.1
1151	0.87	4.9
1155	0.86	3.3
1175	0.85	2.0
1245	0.80	5.1
	nvt $\gtrsim 10^{18}$	
403	2.48	55.0
438	2.28	31.2
438	2.28	30.2
513	1.95	9.9
513	1.95	10.3
568	1.76	5.0
569	1.76	4.9
983	1.02	0.6
993	1.01	0.8
1046	0.96	0.4
1143	0.87	0.7
Internal Resistance Battery Method		
983	1.02	1.0

out-of-pile measurement, was the extreme and rapid fluctuations of both the potential and the current. The continuous fluttering of the meters made accurate readings of emf and current extremely difficult. At times these extremely rapid fluctuations would die down and measurements could be made with reasonable accuracy. Also, at times, the K_2 potentiometer would become completely insensitive, as if a very large resistance had been introduced in the system either due to bad contacts, high resistance of UO_2, or formation of high-resistance coating on the UO_2 surface.

An analysis of traces obtained by continuous monitoring of the current and voltage indicated that the system seemed to attain an equilibrium if maintained under constant temperature and flux conditions. The recording of the thermoelectric emf under such conditions was relatively smooth. The superimposition of an external emf and the resultant flow of current through the UO_2 seemed to throw the system off balance, and a higher noise-to-signal ratio was obtained. Immediately after a flux or temperature change, the fluctuations

Table 3. Thermoelectric Power of System Pt-UO_2 During Irradiation

Temperature (°K)	Thermoelectric Power (μv/°C)
435	130
438	300
513	219
517	85
559	78
564	78
568	227
778	72
823	47
851	150
873	42
901	55
913	63
983	42
983	41
1003	34
1021	49
1023	43
1073	34
1073	63
1155	202
1158	35
1168	159
1173	29

of the emf and current became very pronounced, the emf fluctuations covering as wide a range as 5–7 mv from a mean of 5 mv. With passage of time the fluctuations subsided, so that normal measurements could be made.

From fission gas release data, it has been noted that the bulk of xenon measured has been released as iodine, and a considerable iodine plate-out has been observed.[4] Also, following a withdrawal and reinsertion of the fuel, the iodine buildup reaches equilibrium after the lapse of a few days. A deposition of such an iodine or iodide layer between the UO_2 and the electrical contact and its subsequent removal, or the formation and breakdown of some oxide or other layer on the surface, could also lead to the behavior pattern observed. It does not seem very probable that the thermocouples physically shift due to vibrations, because, given sufficient time, the fluctuations decrease considerably. Moreover, superimposing an external emf leads to pronounced unidirectional voltage fluctuations (the direction depending on the direction of the superimposed emf) with, however, an almost steady current. These facts favor a variation of the surface characteristics, as would result from formation and decomposition of mono- or multimolecular layers with consequent shifts and motion of grain boundaries. However, the effects of mechanical vibrations cannot be ruled out completely, since fluctuations resembling bad contacts have been observed on changing cooling air flow outside the capsule.

It is interesting that the in-pile measurements of resistivity fall into two more or less distinct groups. Measurements made up to irradiation of about 10^{18} nvt fall very close to the values obtained on the unirradiated material. Measurements made during irradiations greater than 10^{18} fall on an almost parallel line of lower resistivity. The curves obey the general equation $\rho = A \exp(-\Delta E/2kT)$. The "activation energies" calculated for the unirradiated and irradiated material are:

	Activation Energy (ev)
Unirradiated, room temp to 200°C	0.83
Unirradiated, 400 to 750°C	0.65
Irradiated up to 10^{18} nvt (150–700°C)	0.5
Irradiated beyond 10^{18} nvt (150–800°C)	0.5

The measurements of the thermoelectric power have been somewhat erratic and the reasons for this behavior are not clear, yet they have shown that the material behaved like an n-type conductor.

The values of the activation energies calculated are in good agreement with values obtained[1] for n-type material. Willardson et al.[1] have interpreted the activation energy of 0.9 ev obtained on n-type material (metal excess) as due to both donors and acceptors (UO_{2+x} and U_3O_{7-z}) and thereby having the effect of reducing the free carrier density. It is not unreasonable to suppose that the high-density sintered UO_2 used in the present experiment also contained phases like UO_{2+x} and U_3O_{7-z}.

ORNL-3093
UC-4 – Chemistry
TID-4500 (16th ed.)

INTERNAL DISTRIBUTION

1. C. E. Center
2. Biology Library
3. Health Physics Library
4-5. Central Research Library
6. Reactor Library
7-26. Laboratory Records Department
27. Laboratory Records, ORNL R.C.
28. A. M. Weinberg
29. L. B. Emlet (K-25)
30. J. P. Murray (Y-12)
31. J. A. Swartout
32. E. H. Taylor
33. E. D. Shipley
34. D. S. Billington
35. M. L. Nelson
36. W. H. Jordan
37. C. P. Keim
38. J. A. Lane
39. J. H. Frye, Jr.
40. R. S. Livingston
41. S. C. Lind
42. F. L. Culler
43. A. H. Snell
44. A. Hollaender
45. M. T. Kelley
46. K. Z. Morgan
47. T. A. Lincoln
48. A. S. Householder
49. C. S. Harrill
50. C. E. Winters
51. H. E. Seagren
52. D. Phillips
53. A. J. Miller
54. J. T. Howe
55. R. A. Charpie
56. G. E. Boyd
57. M. J. Skinner
58. H. G. MacPherson
59. C. J. McHargue
60. F. W. Young, Jr.
61. C. D. Baumann
62-91. R. M. Carroll
92. O. Sisman
93. A. J. Taylor
94. D. F. Toner
95. D. B. Trauger
96. J. G. Morgan
97. M. T. Morgan
98. H. F. McDuffie
99. F. H. Neill
100. J. L. Scott
101. W. B. Cottrell
102. M. M. Yarosh
103. T. Hikido
104. P. G. Lafyatis
105. W. D. Manly
106. P. E. Regan
107. A. E. Goldman
108. E. Storto
109. R. G. Berggren
110. C. D. Bopp
111. W. E. Brundage
112. J. H. Crawford, Jr.
113. D. K. Holmes
114. M. F. Osborne
115. W. W. Parkinson
116. H. E. Robertson
117. F. J. Carlsen
118. J. H. Coobs
119. W. O. Harms
120. H. W. Savage
121. A. P. Fraas
122. G. W. Keilholtz
123. W. E. Browning
124. G. W. Parker
125. R. J. Beaver
126. J. E. Cunningham
127. J. A. Cox
128. C. D. Cagle
129. R. V. McCord
130. P. M. Reyling
131. G. C. Williams
132. R. S. Cockreham
133. Harvey Brooks (consultant)
134. N. Cabrera (consultant)
135. R. S. Sproull (consultant)
136. D. Turnbull (consultant)
137. ORNL – Y-12 Technical Library, Document Reference Section

EXTERNAL DISTRIBUTION

138. Division of Research and Development, AEC, ORO
139. C. L. Stiehl, Convair Division of General Dynamics Corporation, San Diego
140. R. N. Little, ANP Project Office, Fort Worth
141-144. General Electric Company, Vallecitos (1 copy each to F. J. Brutschy, B. Weidenbaum, R. N. Osborn, and T. J. Slosek)
145-146. Knolls Atomic Power Laboratory (1 copy each to J. Belle and B. Lustman)
147-148. Brookhaven National Laboratory (1 copy each to D. H. Gurinsky and F. J. Salzano)
149-150. Battelle Memorial Institute (1 copy each to B. W. Dunnington and F. A. Rough)
151. J. Brinkman, Atomics International
152. W. R. DeBoskey, Westinghouse Atomic Power Division
153. J. H. Kittel, Argonne National Laboratory
154. C. N. Spalaris, General Electric Company, San Jose
155. M. J. Whitman, U.S. Atomic Energy Commission, Washington
156-749. Given distribution as shown in TID-4500 (16th ed.) under Chemistry category (75 copies—OTS)