MARTIN MARIETTA ENERGY SYSTEMS LIBRARIES
3 4456 0364374 2

CENTRAL RESEARCH LIBRARY
DOCUMENT COLLECTION

2

ORNL-3129
UC-37 - Instruments

INLINE DENSIMETER FOR PULSED COLUMN LIQUID DENSITY, PULSE AMPLITUDE, AND PULSE FREQUENCY MEASUREMENTS

T. S. Mackey

CENTRAL RESEARCH LIBRARY
DOCUMENT COLLECTION
LIBRARY LOAN COPY
DO NOT TRANSFER TO ANOTHER PERSON
If you wish someone else to see this document, send in name with document and the library will arrange a loan.

OAK RIDGE NATIONAL LABORATORY
operated by
UNION CARBIDE CORPORATION
for the
U.S. ATOMIC ENERGY COMMISSION

Printed in USA. Price $0.50. Available from the

Office of Technical Services
Department of Commerce
Washington 25, D.C.

LEGAL NOTICE

This report was prepared as an account of Government sponsored work. Neither the United States, nor the Commission, nor any person acting on behalf of the Commission:

A. Makes any warranty or representation, expressed or implied, with respect to the accuracy, completeness, or usefulness of the information contained in this report, or that the use of any information, apparatus, method, or process disclosed in this report may not infringe privately owned rights; or

B. Assumes any liabilities with respect to the use of, or for damages resulting from the use of any information, apparatus, method, or process disclosed in this report.

As used in the above, "person acting on behalf of the Commission" includes any employee or contractor of the Commission, or employee of such contractor, to the extent that such employee or contractor of the Commission, or employee of such contractor prepares, disseminates, or provides access to, any information pursuant to his employment or contract with the Commission, or his employment with such contractor.

ORNL-3129

Contract No. W-7405-eng-26
Chemical Technology Division

INLINE DENSIMETER FOR PULSED COLUMN LIQUID DENSITY, PULSE AMPLITUDE, AND PULSE FREQUENCY MEASUREMENTS

T. S. Mackey

DATE ISSUED

JUL - 5 1961

OAK RIDGE NATIONAL LABORATORY
Oak Ridge, Tennessee
Operated by
UNION CARBIDE CORPORATION
for the
U. S. Atomic Energy Commission

MARTIN MARIETTA ENERGY SYSTEMS LIBRARIES

3 4456 0364374 2

ABSTRACT

An inline densimeter was fabricated and tested in the laboratory. When operated in a range of 1.000 to 1.200 g/cc an accuracy of ± 0.2% in the mid-point of the range was easily achieved. The instrument also measures pulse amplitude and pulse frequency when used on a pulsating flow. A long life with high reliability is expected because of the simple all-welded construction and highly reliable electronic system.

CONTENTS

		Page
1.0	Introduction	4
2.0	Principle of Operation	4
3.0	Experimental Testing	7

1.0 INTRODUCTION

An inline densimeter is described which measures the density of the continuous phase at a selected point in a pulsed column used for extraction of uranium from aqueous solution by an organic extractant. From the density the degree of saturation of the solvent can be measured, and thus any shift in column profile can be determined early and provision made to prevent losses. Measurement of density of radioactive process solutions is difficult because the presence of high radiation fields limits the selection of materials of construction and increases the problem of properly servicing the instruments. A special feature was designed into this model for pulse amplitude sensing, but the instrument could be used in other types of work, e.g., in ion exchange and process solution makeup.

Acknowledgments. R. W. Stelzner of the Analytical Chemistry Division furnished the design for the electronic system and assisted in the laboratory testing of the densimeter.

2.0 PRINCIPLE OF OPERATION

The principle of operation of the densimeter is: the position of the float changes as the density of the liquid changes because of the change in requirement of spring tension to balance the buoyant forces on the float. The differential transformer precisely measures the change in position of the float and provides a signal which, with proper electronic modification, can be measured on the Brown recorder.

2.1 Description of the Densimeter

The densimeter (Fig. 1) is composed of a stainless steel sensing float which contains a soft steel armature, a flat piece of stainless steel 18-gauge sheet metal 1 in. wide by 8 in. long which serves as a float guide and spring, a differential transformer which senses the position of the float, a float zero positioning mechanism which consists of the spring support, a 16-gauge diaphragm through which the spring support passes and four adjusting screws, and the housing constructed of 1/8-in. thick stainless steel and 1-1/2-in. standard pipe sections. The housing was flanged together to permit disassembly for changing spring and float design. The solution entrance was directly beneath the float and the discharge directly above.

2.2 The Electronic System

The electronic system (Fig. 2) consisted of the differential transformer, a 0.33-μf condenser to resonate the transformer, an M500 rectifier, two resistors, one 10K and one 200-Ω measuring resistor, and a 500-μf condenser which was switched in and out to separate out the column pulse and density measurements periodically. A Brown Electronik recorder completed the system.

2.3 Operation of the Densimeter

The range of the densimeter was set up as follows: a liquid of a known specific gravity was placed in the instrument and then the float was positioned

UNCLASSIFIED
ORNL-LR-DWG 56644

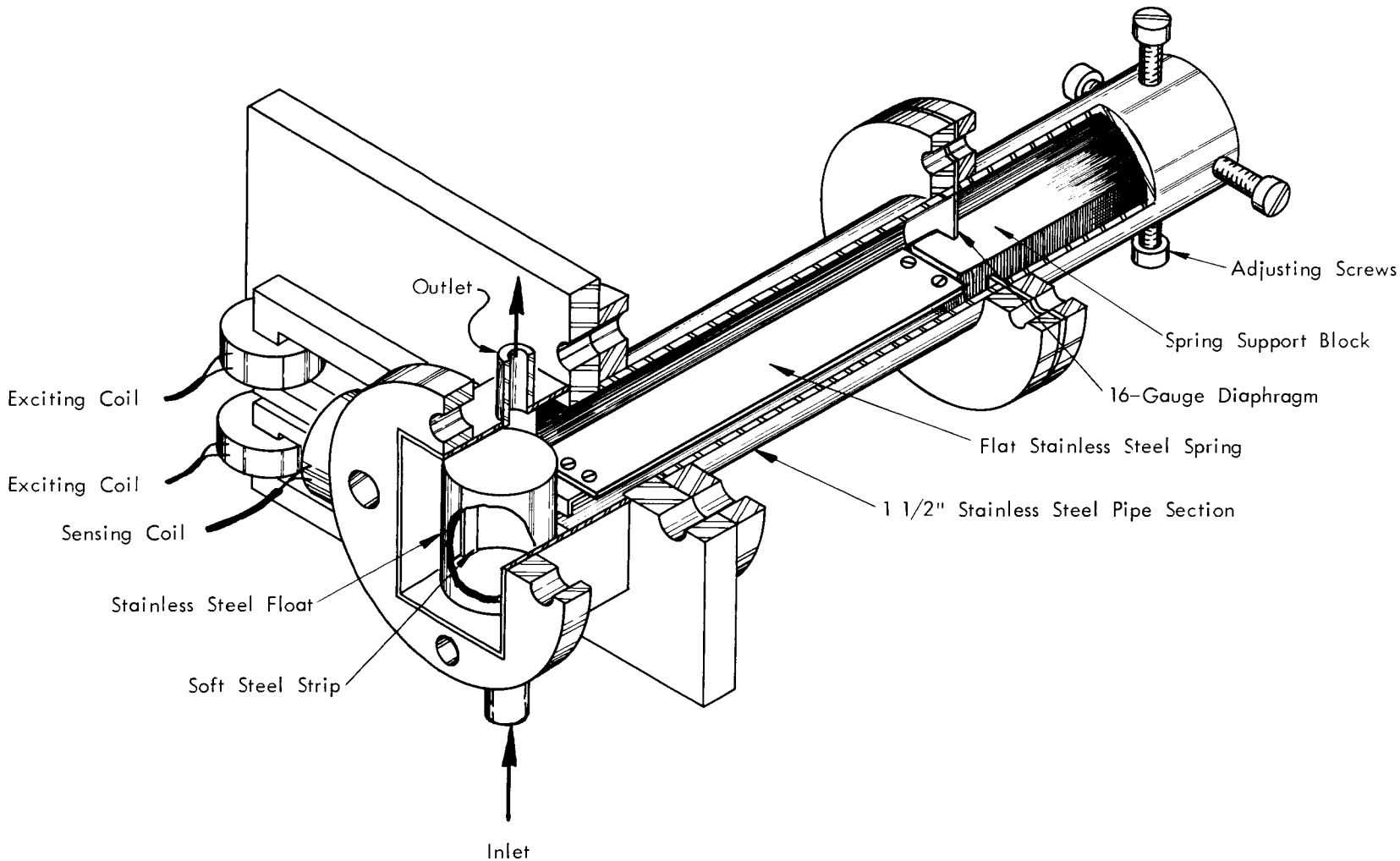

Fig. 1. Experimental inline densimeter.

UNCLASSIFIED
ORNL-LR-DWG 56645

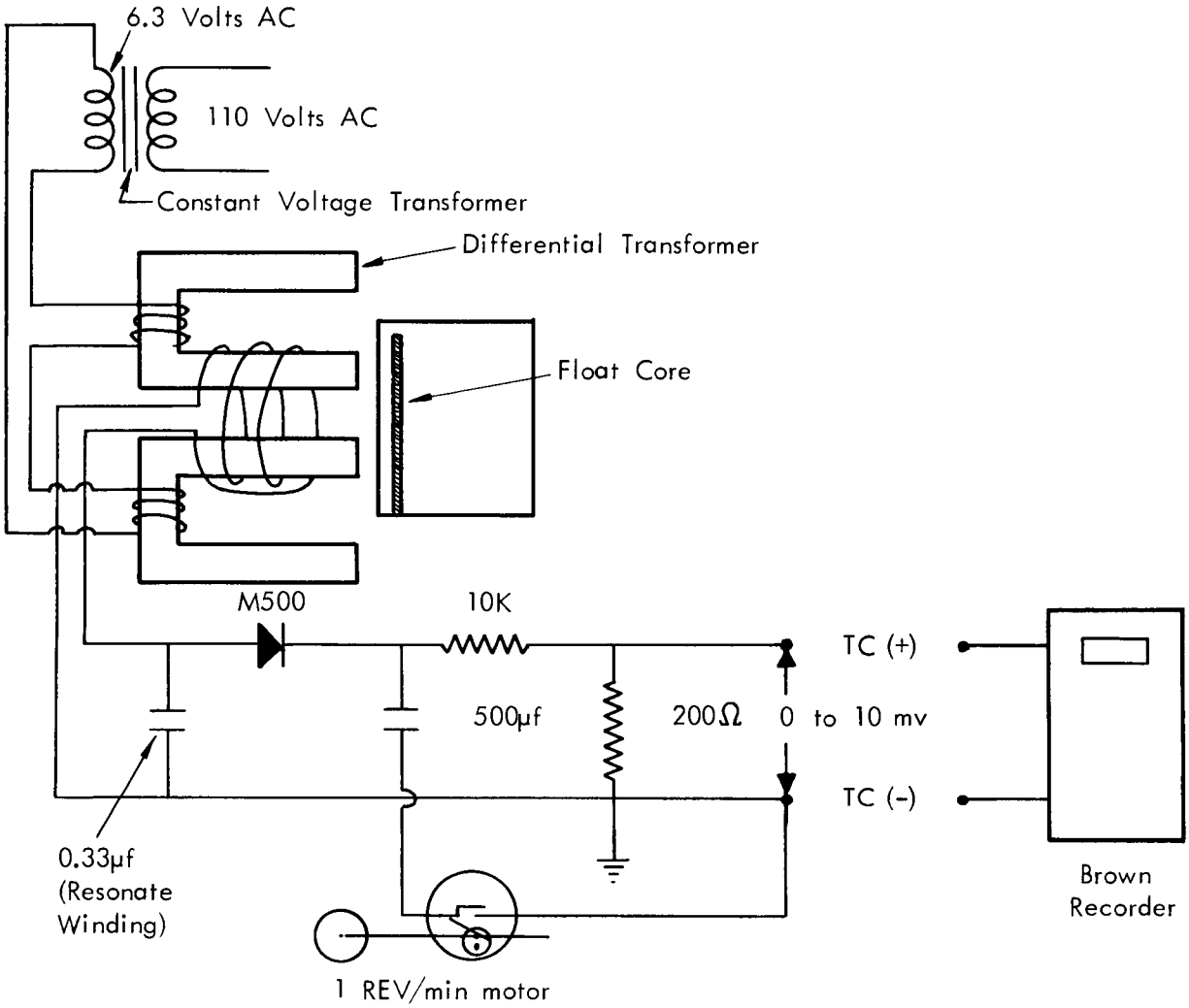

Fig. 2. Inline densimeter electronic system.

to give the proper readout. Care had to be taken that the range of density measurements desired fell in the straight-line portion of the calibration curve (Fig. 3).

3.0 EXPERIMENTAL TESTING

The instrument was installed in a simulated pulsed column (Fig. 4). After the instrument range was adjusted with pure water, aluminum nitrate was added in steps to give liquids of increasing density. The liquid density was measured with laboratory hydrometers and this result was plotted against the measurements read from the Brown Electronik recorder (Fig. 5).

The tracing of the chart sections (Fig. 6) demonstrate the ability of the instrument to respond to changes in density of the liquid and to changes in the pulse amplitude and the time required for the system and instrument to reach an equilibrium value. For density measurements, the time required after the liquid density was changed until the system reached equilibrium was approximately 13 min. The instrument showed an increase in density for the first 8 min and then a decrease before a steady-state indication because the heavy solution entered at the bottom of the column and the density profile of the column changed with recirculation of liquid through the column. Also, the changes in pulse amplitude were readily observed. The pulse amplitude was changed from the maximum value at full piston stroke to 75 and 50% of maximum. Stopping the feed pump during the density measurement resulted in a drop of approximately 0.05 mv in the readout.

Thus the accuracy of the instrument depends to a considerable degree on design. If the instrument is designed to be flow-sensitive and indicate pulse amplitude, some loss in accuracy occurs. If the instrument is designed with baffles to decrease the sensitivity to flow rate, a much higher accuracy can be expected. Since the instrument measures the difference in density between the standard and the liquid in question, the density measurement is more precise. If the range of the instrument is set up to operate between 1.000 and 1.200 g/cc and an error of $\pm$ 1% of full scale reading is made in the detection and readout system, this amounts to only $\pm$ 0.2% in the overall density measurement when read at this mid-range point. A further increase in precision could be obtained by decreasing the range over which the measurements are made.

Additional test work on this instrument will be done to investigate the problems encountered in an actual pulsed column installation.

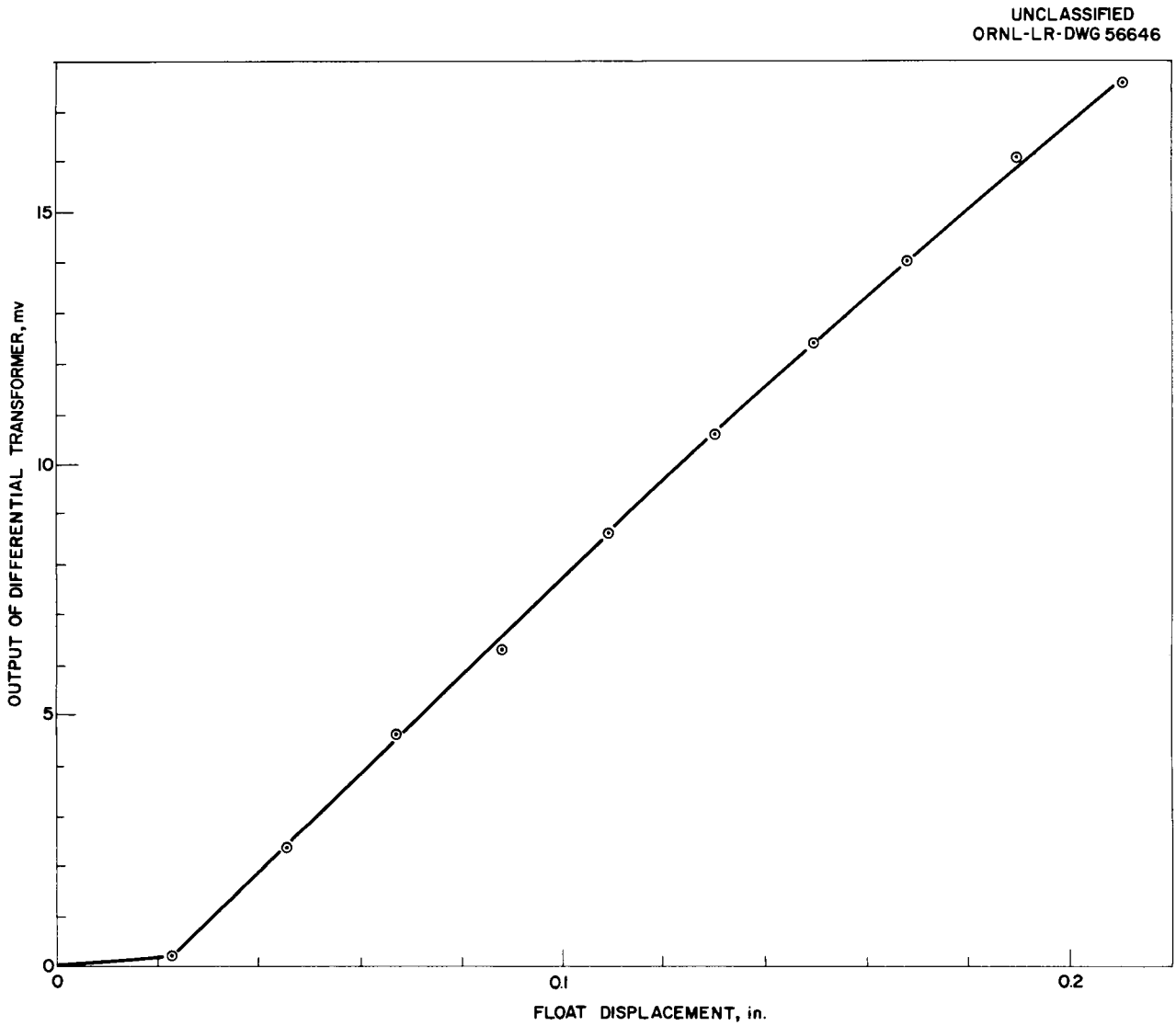

Fig. 3. Calibration of differential transformer.

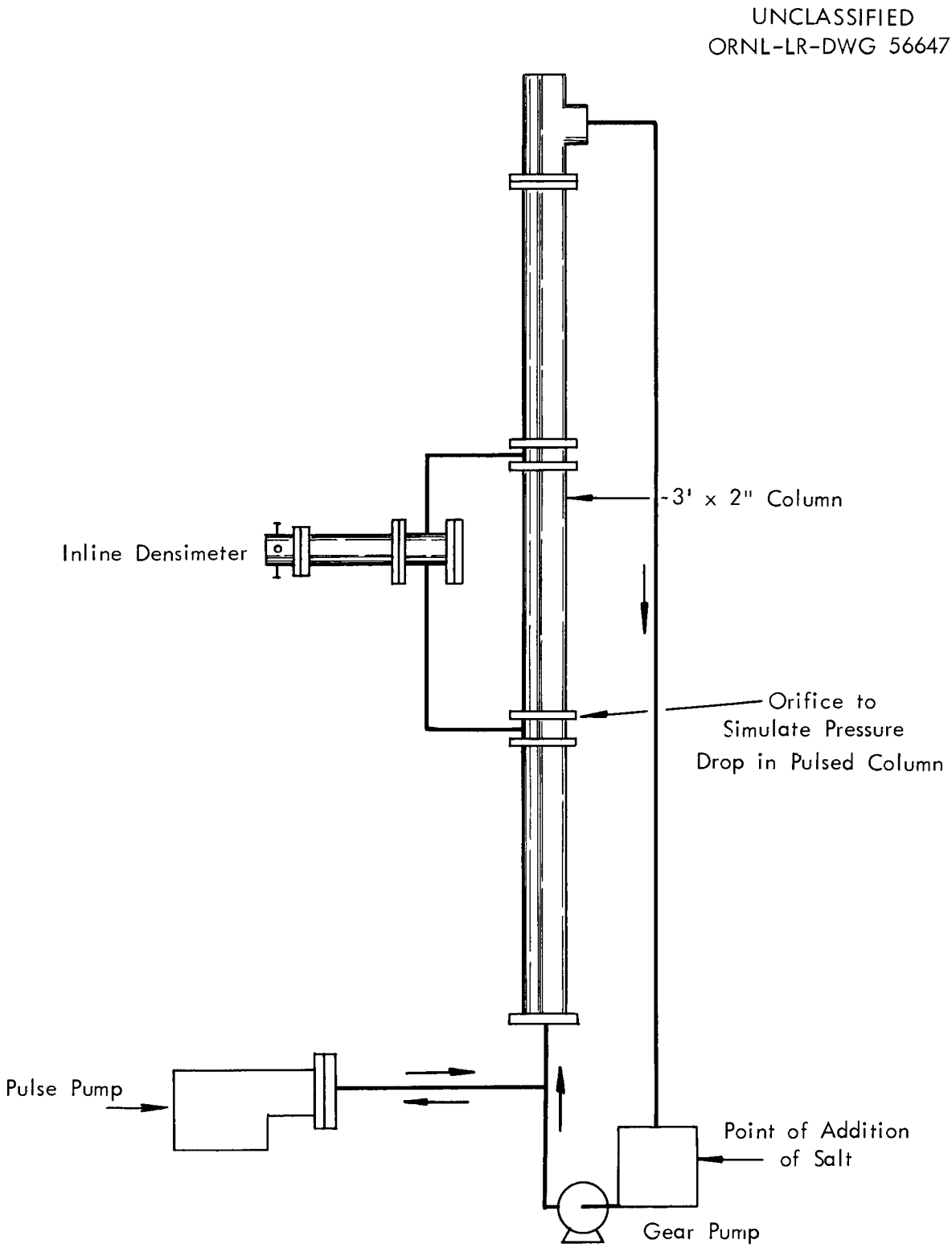

Fig. 4. Laboratory test system.

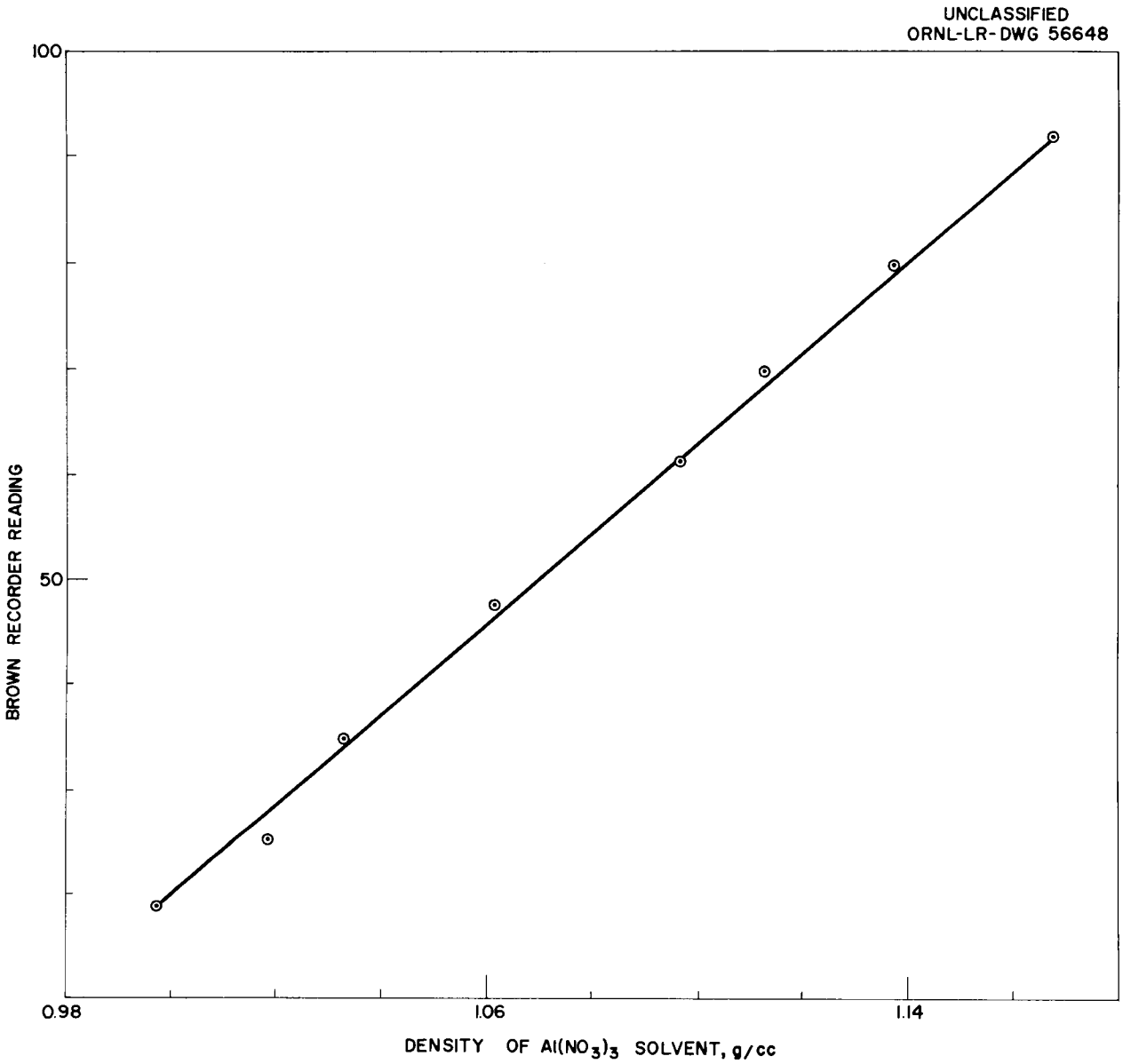

Fig. 5. Calibration curve of inline densimeter.

Instrument Flow Rate: 250 cc/min
Column Flow Rate: 500 cc/min
Pulse Frequency: 50 cycles/min
Temperature: 23°C
Height of Column (2 in. dia.): ~3 ft
Sequence of Timing: Density, ~50 sec
Pulse amp., ~40 sec

UNCLASSIFIED
ORNL-LR-DWG 56649

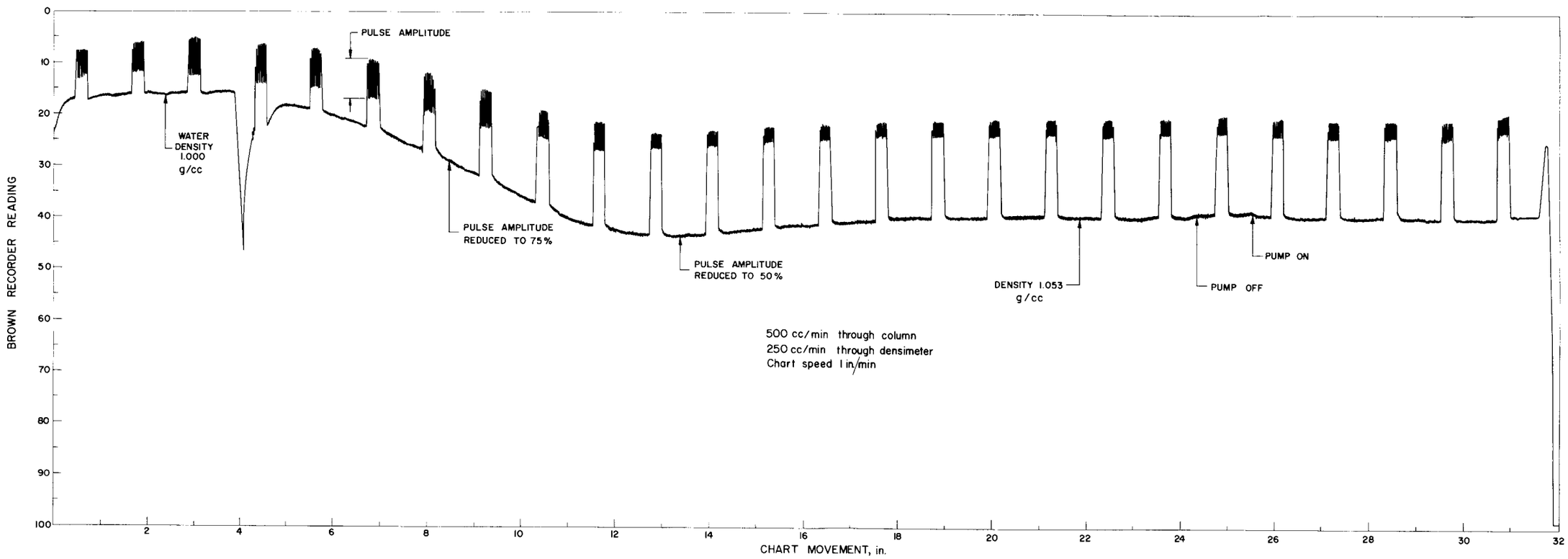

Fig. 6. Densimeter performance test chart.

ORNL-3129
UC-37 - Instruments
TID-4500 (16th ed.)

INTERNAL DISTRIBUTION

1. Biology Library
2-3. Central Research Library
4. Reactor Division Library
5. ORNL - Y-12 Technical Library, Document Reference Section
6-25. Laboratory Records Department
26. Laboratory Records, ORNL R.C.
27. E. D. Arnold
28. R. E. Blanco
29. G. E. Boyd
30. J. C. Bresee
31. R. E. Brooksbank
32. K. B. Brown
33. F. R. Bruce
34. C. E. Center
35-36. F. L. Culler
37. D. E. Ferguson
38. J. H. Frye, Jr.
39. J. H. Gillette
40. H. E. Goeller
41. A. T. Gresky
42. W. R. Grimes
43. C. E. Guthrie
44. P. A. Haas
45. A. Hollaender
46. A. S. Householder
47. R. G. Jordan (Y-12)
48. W. H. Jordan
49. M. T. Kelley
50. C. E. Lamb
51. J. A. Lane
52. W. H. Lewis
53. T. A. Lincoln
54. S. C. Lind
55. T. S. Mackey
56. K. Z. Morgan
57. J. P. Murray (K-25)
58. M. L. Nelson
59. D. Phillips
60. A. D. Ryon
61. H. E. Seagren
62. E. M. Shank
63. M. J. Skinner
64. R. W. Stelsner
65. J. A. Swartout
66. E. H. Taylor
67. J. W. Ullmann
68. W. E. Unger
69. A. M. Weinberg
70. M. E. Whatley
71. C. E. Winters
72. R. G. Wymer
73. J. W. Youngblood
74. D. L. Katz (consultant)
75. C. E. Larson (consultant)
76. I. Perlman (consultant)
77. J. H. Rushton (consultant)
78. H. Worthington (consultant)
79. T. H. Pigford (consultant)

EXTERNAL DISTRIBUTION

80. G. J. Alkire, Process Control Department, Hanford Atomic Products Operation
81. Division of Research and Development, AEC, ORO
82-718. Given distribution as shown in TID-4500 (16th ed.) under Instruments category (100 copies - OTS)