CENTRAL RESEARCH LIBRARY
DOCUMENT COLLECTION

OAK RIDGE NATIONAL LABORATORY

operated by

UNION CARBIDE CORPORATION

for the

U.S. ATOMIC ENERGY COMMISSION

OAK RIDGE NATIONAL LABORATORY LIBRARIES
3 4456 0548474 9

ORNL-TM-20

COPY NO. - 53

DATE - Oct. 6, 1961

REMOVAL OF HYDROGEN, CARBON MONOXIDE, AND METHANE FROM GAS COOLED REACTOR HELIUM COOLANTS

C. D. Scott

LIBRARY LOAN COPY
DO NOT TRANSFER TO ANOTHER PERSON
If you wish someone else to see this document, send in name with document and the library will arrange a loan.

CENTRAL RESEARCH LIBRARY
DOCUMENT COLLECTION

ABSTRACT

It is necessary to maintain low contamination levels in Gas Cooled Reactor helium coolants and in-pile loops. The anticipated major non-radioactive, gaseous contaminants are H_2O, CO_2, H_2, CO, and CH_4. A two-step purification system for removal of these contaminants is proposed in which first all oxidizable gases are oxidized to H_2O and CO_2 and then the H_2O and CO_2 are removed from the helium by fixed bed co-sorption.

Although catalytic oxidation of the H_2, CO, and CH_4 by oxygen is possible, control problems make this method unacceptable when low contamination levels are desired. The alternate method of oxidation at low contamination is by fixed-beds of pelleted CuO. Kinetic tests on the reaction of H_2, CO, and CH_4 from a flowing stream of helium with fixed beds of CuO have been made in the temperature range of 400-600°C, pressure of 10-30 atm and mass flow rates of 0.085 to 0.255 g-moles/cm^2-min at contamination levels of 900-12,000 ppm by vol. It has been shown that the controlling reaction rate mechanisms for the reactions of H_2 and CO with CuO are mass transfer of the H_2 or CO from the bulk gas to the reaction site within the pellet while the CH_4-CuO reaction is dependent on CH_4 concentration in the bulk gas and available CuO surface area.

Finite difference type computer codes based on the determined reaction mechanisms were written and demonstrated which will describe the fixed-bed effluent concentration of H_2, CO, and CH_4 as a function of time, for any size bed in the range of experimental conditions tested.

Initial experimental results from kinetic tests on the co-sorption of H_2O and CO_2 by Molecular Sieves indicates that this process is feasible and the H_2O is sorbed preferentially to the CO_2.

Presented at the Seventh AEC Air Cleaning Conference at Brookhaven National Laboratory, October 10-12, 1961

NOTICE

This document contains information of a preliminary nature and was prepared primarily for internal use at the Oak Ridge National Laboratory. It is subject to revision or correction and therefore does not represent a final report. The information is not to be abstracted, reprinted or otherwise given public dissemination without the approval of the ORNL patent branch, Legal and Information Control Department.

LEGAL NOTICE

This report was prepared as an account of Government sponsored work. Neither the United States, nor the Commission, nor any person acting on behalf of the Commission:

A. Makes any warranty or representation, expressed or implied, with respect to the accuracy, completeness, or usefulness of the information contained in this report, or that the use of any information, apparatus, method, or process disclosed in this report may not infringe privately owned rights; or

B. Assumes any liabilities with respect to the use of, or for damages resulting from the use of any information, apparatus, method, or process disclosed in this report.

As used in the above, "person acting on behalf of the Commission" includes any employee or contractor of the Commission, or employee of such contractor, to the extent that such employee or contractor of the Commission, or employee of such contractor prepares, disseminates, or provides access to, any information pursuant to his employment or contract with the Commission, or his employment with such contractor.

REMOVAL OF HYDROGEN, CARBON MONOXIDE, AND METHANE FROM GAS COOLED REACTOR HELIUM COOLANTS

1.0 INTRODUCTION

Contamination of coolant gases by chemical impurities is a major problem in gas cooled reactors and in-pile experimental loops. Recent gas cooled reactor concepts in the United States use helium as the primary coolant.[1,2,3]

The non-radioactive, gaseous impurities of most concern are H_2O, CO_2, H_2, CO and traces of hydrocarbons which can be represented by CH_4. These contaminants result from (1) out-gassing of the graphite reflector and moderator, and (2) inleakage of H_2O with resulting reaction with graphite, $H_2O + C \rightarrow H_2 + CO$. It is necessary to maintain these contaminants at low levels so that removal of graphite in the reactor core by chemical reaction is at a minimum, nuclear properties of the coolant are constant, and constant thermal properties of the coolant are maintained. In the Oak Ridge National Laboratory program of GCR Coolant Purification studies, processes for removal of the gaseous contaminants are being developed. Our ultimate goal is to develop design equations which will allow design of purification system components.

2.0 PURIFICATION FLOWSHEET

Production rates of the various gaseous contaminants are fairly low, therefore, removal of the contaminants can be achieved on a side stream from the main coolant stream. This side stream will probably be less than 1% of the total coolant flow. Use of such a side stream will also reduce the amount of useful heat lost from the coolant due to the necessity of operating part of the purification system at < 100°F.

The proposed coolant purification flowsheet for non-radioactive, gaseous contaminants is a two-step process in which (1) all oxidizable gases are oxidized to H_2O and CO_2, and (2) the H_2O and CO_2 are removed by a fixed-bed sorption process (see Fig. 1). It is anticipated that the oxidation process step will be carried out at a temperature in excess of 400°C, while the sorption process will be at ambient temperature. Present GCR concepts are for system operating pressure of 20-60 atm, and it is desirable to operate the system at a minimum pressure drop.

2.1 Oxidation of H_2, CO, and CH_4

There are two possible process methods of oxidizing H_2, CO, and CH_4: (1) catalytic oxidation by O_2, and (2) oxidation by inorganic oxides such as CuO.

Catalytic oxidation by oxygen in a fixed bed of solid catalyst appears to offer the best solution to this problem if allowable concentration levels are high (> 10,000 ppm). Introduction of small amounts of the oxidant, oxygen, to the coolant would not add materially to the contamination problem. However, if contamination must be maintained at low levels (< 1000 ppm) as would be the case for high temperature GCR,[3] the control problem of O_2

OAK RIDGE NATIONAL LABORATORY LIBRARIES

3 4456 0548474 9

UNCLASSIFIED
ORNL-LR-DWG 62360

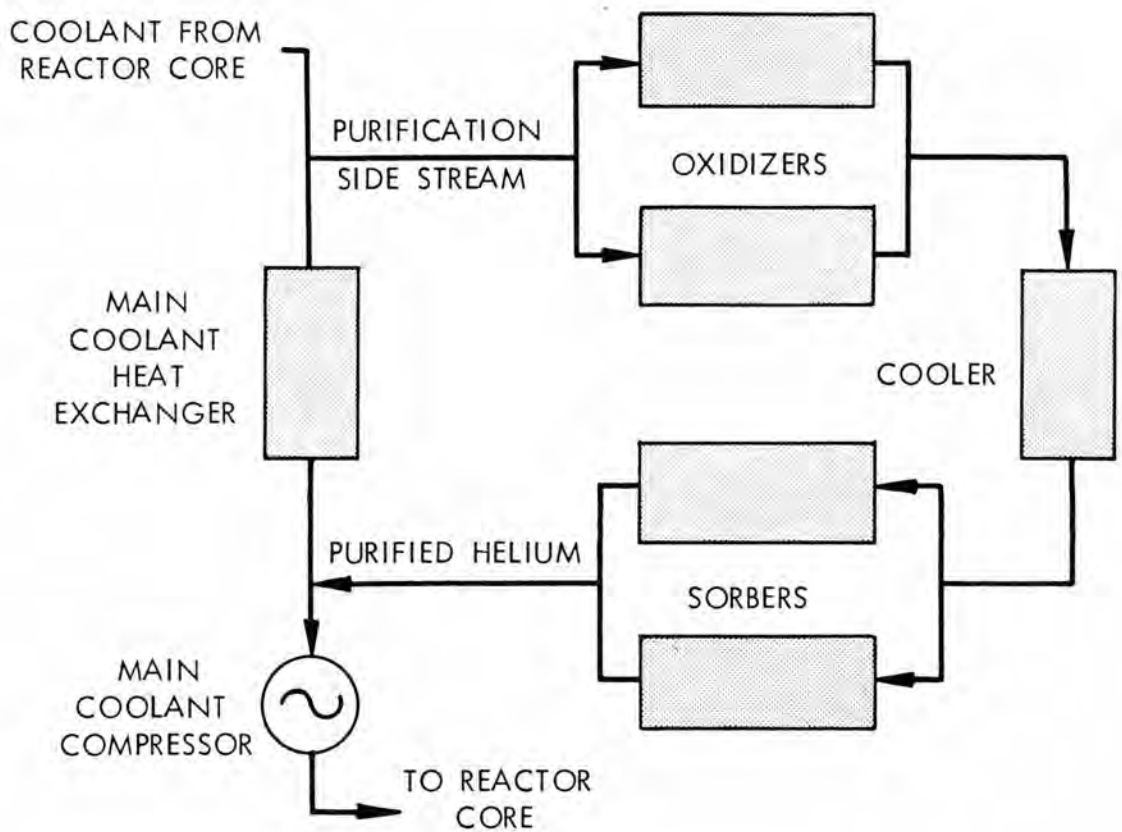

Fig. 1. Simplified flowsheet for a GCR helium purification system for the non-radioactive, gaseous contaminants, H_2, CO, CH_4, CO_2 and H_2O.

addition becomes very critical since small amounts of additional oxygen contamination to the coolant could not be tolerated.

For the cases of low levels of contamination by H_2, CO, and CH_4, fixed beds of CuO could be used to oxidize the contaminants to CO_2 and H_2O,

$$H_2 + CuO \rightarrow H_2O + Cu \quad (1)$$

$$CO + CuO \rightarrow CO_2 + Cu \quad (2)$$

$$CH_4 + 4CuO \rightarrow CO_2 + 2H_2O + 4Cu \quad (3)$$

The resulting reduced beds of Cu could then be regenerated to CuO by use of air or O_2,

$$Cu + 1/2\ O_2 \rightarrow CuO \quad (4)$$

The fixed bed, CuO oxidizer would not have the problem of oxygen contamination of the coolant (O_2 decomposition pressure is < 1 ppm at 600°C and 20 atm),[4] however, if continuous operation is desired dual oxidizers would be needed for cyclic operation of the system with alternate regeneration of the reduced bed.

2.2 Co-sorption of CO_2 and H_2O

Removal of the CO_2 and H_2O from contaminated helium is most easily achieved by fixed beds of Molecular Sieves. This method of CO_2 and H_2O removal is necessary for low levels of contamination and it may be used in conjunction with a cooler-condenser if large amounts of H_2O are present. Since this process is also a fixed-bed process, there will be a necessity for dual sorbers one of which will be active at a time, thus, allowing time for regeneration of the second bed by dry air.

3.0 EXPERIMENTAL PROGRAM

Although a considerable amount of experimental work has been done on this entire subject by Oak Ridge National Laboratory, the program is not complete. In order to demonstrate the general techniques of experimentation and data analysis used to date, the work on the H_2-CuO reaction will be discussed in somewhat more detail. The other processes and reactions have been and are being investigated in a similar manner.

Our approach to the development of CuO fixed-bed oxidizers has been to determine the kinetic mechanisms of the reactions of interest in the operating ranges of interest. This is then the basis for derivation of the necessary design equation for system components.

3.1 Physical Properties and Operating Ranges

Since low pressure drops are necessary in the CuO oxidizer, it was decided to use pelleted CuO as the fixed bed material. The material used was CuO compacted into nominal 1/8-in. rt circular cylinders obtained from the Harshaw Chemical Company (see Fig. 2). This material is available in

UNCLASSIFIED
PHOTO 53113

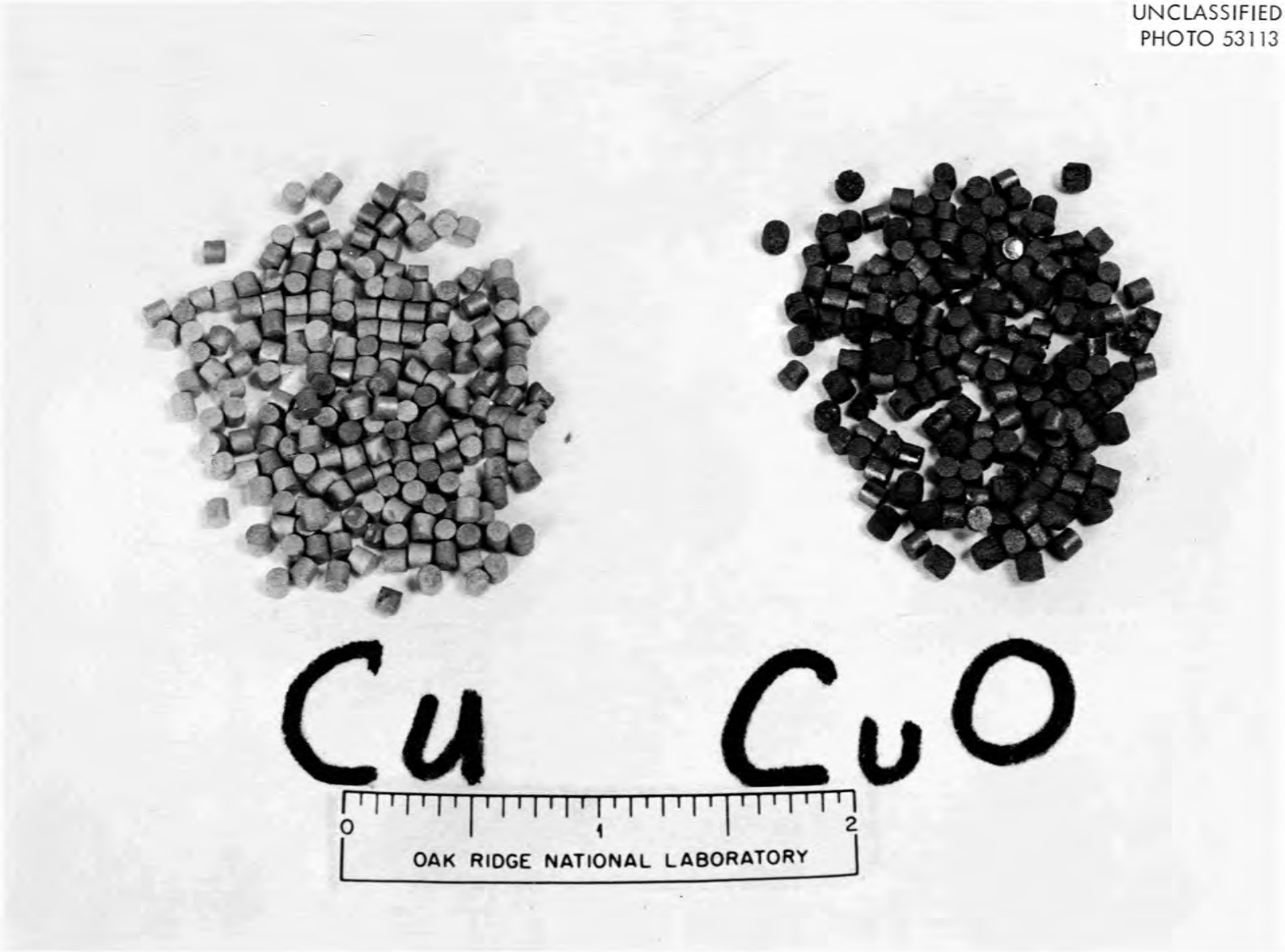

Fig. 2. Copper oxide pellets in oxidized and reduced state.

commercial quantities. The mass flow rates of interest were 0.25 g-moles/cm^2-min or less. The H_2 contamination level to be investigated was 1000 to 10,000 ppm (vol). Temperature range of interest was 400-600°C. The pressure range was 10-30 atm.

3.2 Rate Controlling Mechanism

It was found that when CuO pellets reacted with H_2 from a flowing stream of He, the partially reduced CuO pellet always had a well defined Cu-CuO interface within the pellet (see Fig. 3). This interface was so well defined that it suggested control of the reaction must be due to mass transport of the H_2 from the bulk gas to the reaction site. That is, the reaction was very rapid and essentially irreversible. Thermodynamic considerations show that the H_2-CuO reaction is essentially irreversible.

The resulting mathematical model for such a system would be (see Fig. 4) a pellet, assumed to be a sphere, in which the H_2 diffused through an external stagnant gas film to the solid surface and then subsequently diffuses through the solid to the reaction interface. The reaction interface would be a spherical shell of radius r_o. Because of the irreversibility of the process, the H_2 concentration at the interface would go to zero and the H_2 concentration gradient within the sphere would be dependent on the internal diffusion assumed to be molecular diffusion through the pores of the solid. The external diffusion through the gas film would be assumed to be dependent on the driving force due to the concentration difference between the bulk gas and on the solid surface.

This mathematical model of the rate controlling mechanisms of H_2 in a flowing stream of helium reacting with a fixed bed of CuO pellets can be expressed as three differential equations:

Bed Material Balance:

$$\left(\frac{\partial C}{\partial t}\right)_z + V\left(\frac{\partial C}{\partial z}\right)_t = -\frac{1}{\beta}\left(\frac{\partial n}{\partial t}\right)_z \tag{5}$$

Reaction Rate:

$$\left(\frac{\partial n}{\partial t}\right)_z = k_g aC\left[1 - \frac{k_g a}{\tau}\left(\frac{R - r_o}{4\pi\alpha r_o R + k_g a/\tau\,(R - r_o)}\right)\right] \tag{6}$$

Position of Reaction Interface:

$$r_o(1 - r_o/R)\,dr_o = -\frac{\alpha D}{b}\left[\frac{k_g aC}{\tau}\left(\frac{1}{\frac{4\pi\alpha D r_o R}{R - r_o} + \frac{k_g a}{\tau}}\right)\right]dt \tag{7}$$

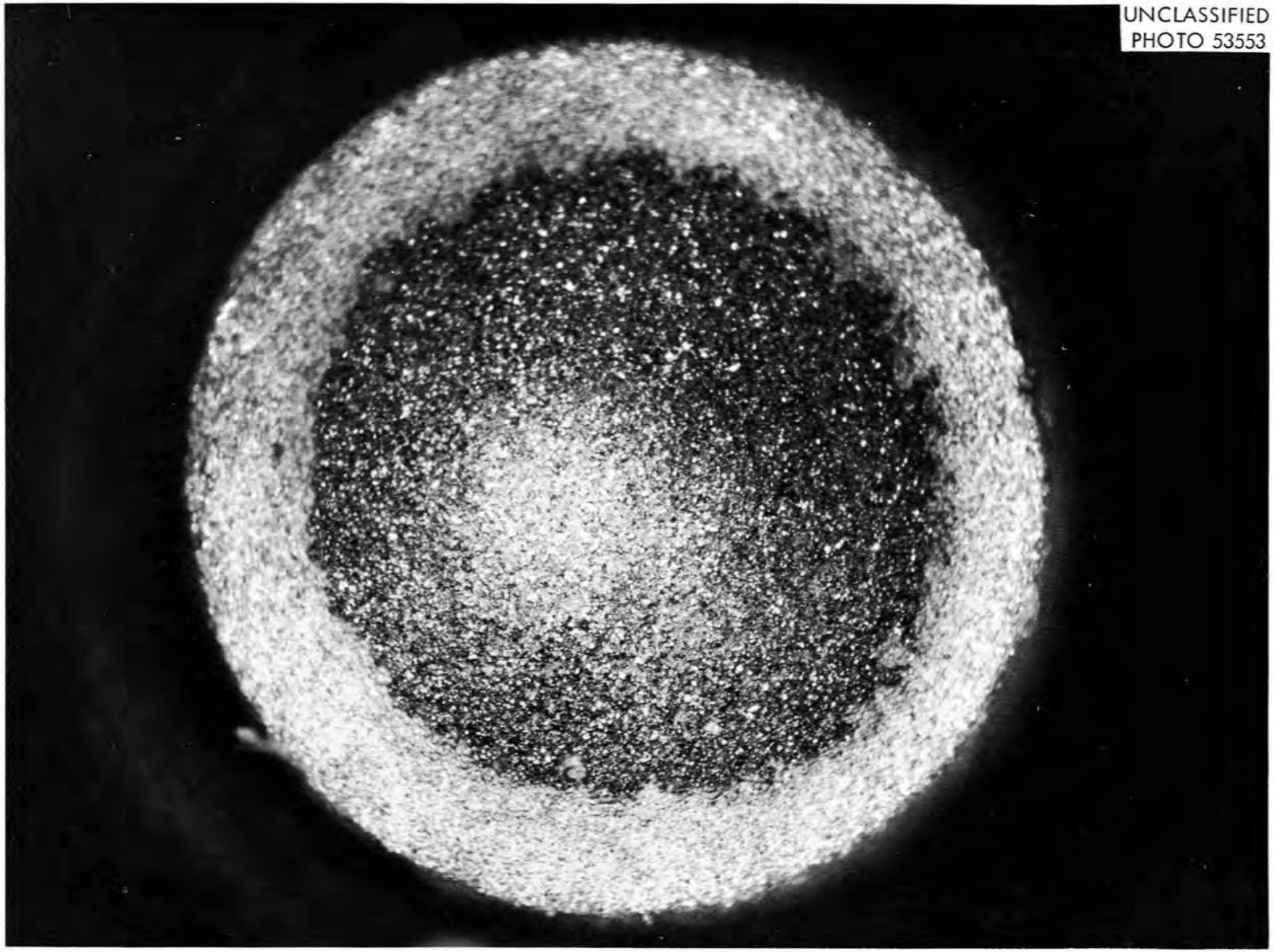

Fig. 3. Sectioned CuO pellet which has been partially reduced by hydrogen.

UNCLASSIFIED
ORNL-LR-DWG 56930

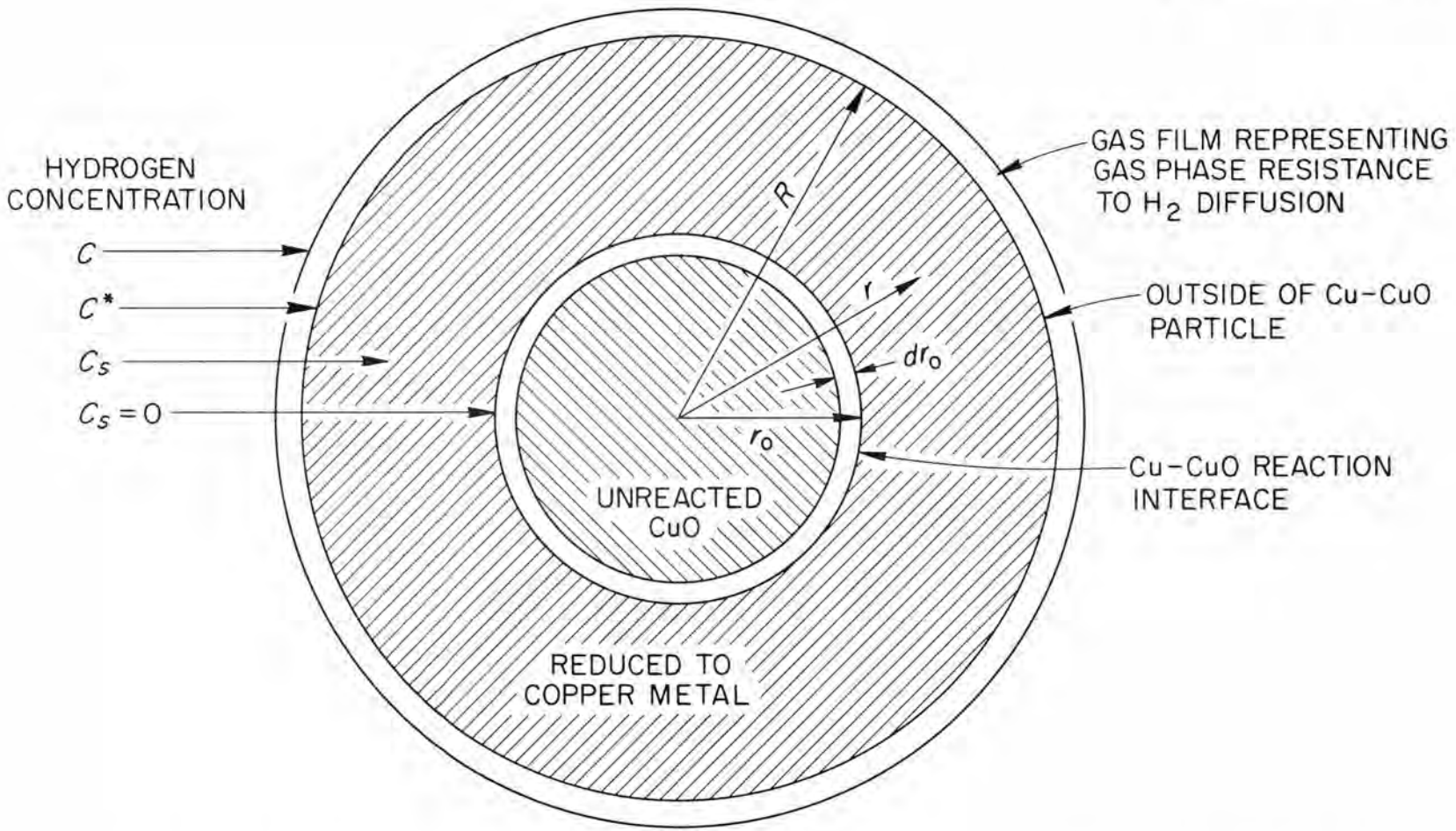

Fig. 4. Section of the spherical model used to describe the case of the rapid, irreversible reaction of H_2 and CuO with the reaction rate controlled by gas phase and solid phase diffusion of H_2.

where,

C = gas-phase concentration of hydrogen

t = run time

z = bed height measured from bottom of bed

V = interstatial gas velocity

β = bed porosity

n = bed molar density of CuO reacted to Cu

k_g = film mass transfer constant

a = exterior surface area of CuO pellets

τ = number of CuO pellets per unit volume of bed

α = effective porosity of CuO pellets

R = radius of pellet

r_o = radius of Cu-CuO interface in pellet

b = molar density of CuO in pellet

D = molecular diffusivity of hydrogen

These equations can be solved simultaneously by a finite difference technique on a digital computer.

3.3 Internal Diffusion

In order to determine if the assumed mechanism of internal mass transfer was correct, molecular diffusion through pores, a series of experiments were made in which differential beds of CuO pellets were reacted with H_2 in high velocity streams of He in the pressure range of 10-30 atm, temperature range of 400-600°C and H_2 concentration range of 0.1 to 1.0%. If external diffusion does not contribute to the reaction rate control, an expression for molecular diffusion can be derived for the differential beds of CuO:

$$D = \frac{b}{\alpha C t}\left(\frac{R^2}{6} + \frac{r_o^3}{3R} - \frac{r_o^2}{2}\right) \qquad (8)$$

In the differential bed tests, the monolayer of pellets were sectioned after each test and the resulting position of the Cu-CuO interfaces were determined and used in equation (8) to obtain the molecular diffusivity. It was found that the temperature and pressure dependence for the molecular diffusivity were correct in the range of operating conditions tested.

However, the effective porosity of the pellets was found to be about 1/5 of the total porosity of the pellets (~40%). This effect has been noted by several other workers.

3.4 External Diffusion

When resistance to mass transfer of the contaminant from the bulk gas to the CuO pellet surface was assumed to be the conventional film diffusion, it was found that the mass transfer factor, J_D, for this transfer in the range of Modified Reynold's Numbers tested (~4-15) could be expressed as a function of Modified Reynold's Number:

$$J_D = 0.24\ (Re')^{-0.69}$$

where,

J_D = mass transfer factor

Re' = Modified Reynold's Number

This expression is similar to others found in the literature for various solid-fluid mass and heat transfer systems.

3.5 Deep Bed Tests

The data on internal and external mass transfer and the three differential equations describing the mathematical model can be utilized to predict the H_2 concentration at any point in the deep bed. Finite difference solution of the three equations, (5), (6), and (7), was made by an IBM 7090 digital computer. A series of deep bed tests were made in which a flowing stream of pre-heated He contaminated with H_2 was continuously introduced to a bed of CuO pellets and the effluent from the bed was periodically analyzed for H_2 content by a gas adsorption chromatograph (see Fig. 5). These resulting H_2 effluent concentration history curves were then used as the basis for comparison of experimental and predicted results (see Fig. 6). It was found that agreement was adequate for the assumed model and the three differential equations from the model can be used as design equations.

3.6 Other Work

Work has also been completed on the CO and CH_4 oxidation by CuO and the reaction mechanisms for these reactions have been determined. The CO-CuO reaction appears to have the same mechanism as the H_2-CuO reaction while the CH_4-CuO reaction is dependent on CH_4 concentration in the bulk gas and available CuO surface area. The co-sorption of H_2O and CO_2 by type 5-A Molecular Sieves is currently being investigated in a manner similar to that outlined for the H_2-CuO reaction. Initial experimental results indicate that this process is feasible and the H_2 is sorbed preferentially to CO_2.

References

1. The Staff of ORNL, "The ORNL Gas-Cooled Reactor, Part 3," ORNL-2500, April 1, 1958.

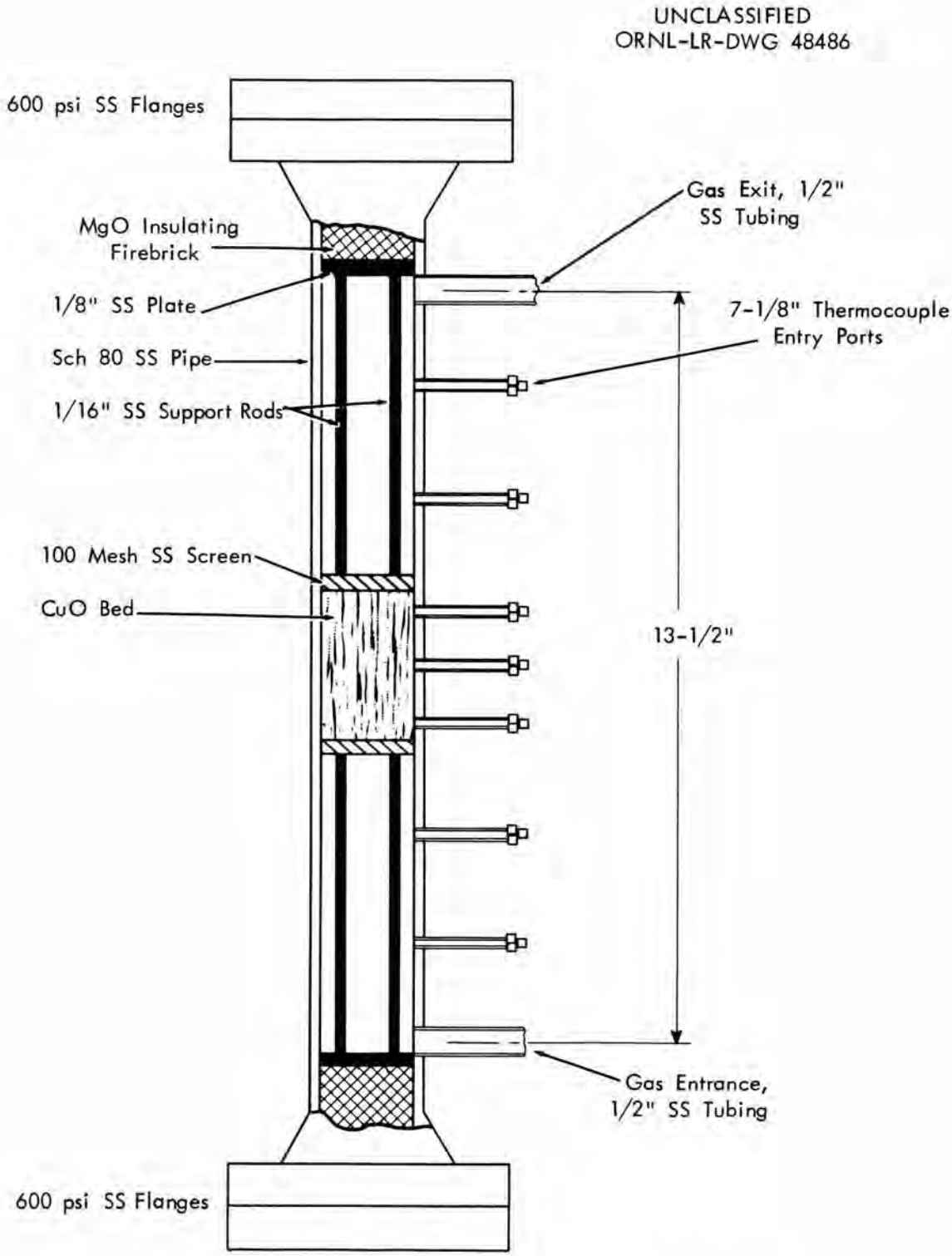

Fig. 5. Two-inch oxidizer used in deep bed tests for the H_2-CuO reaction.

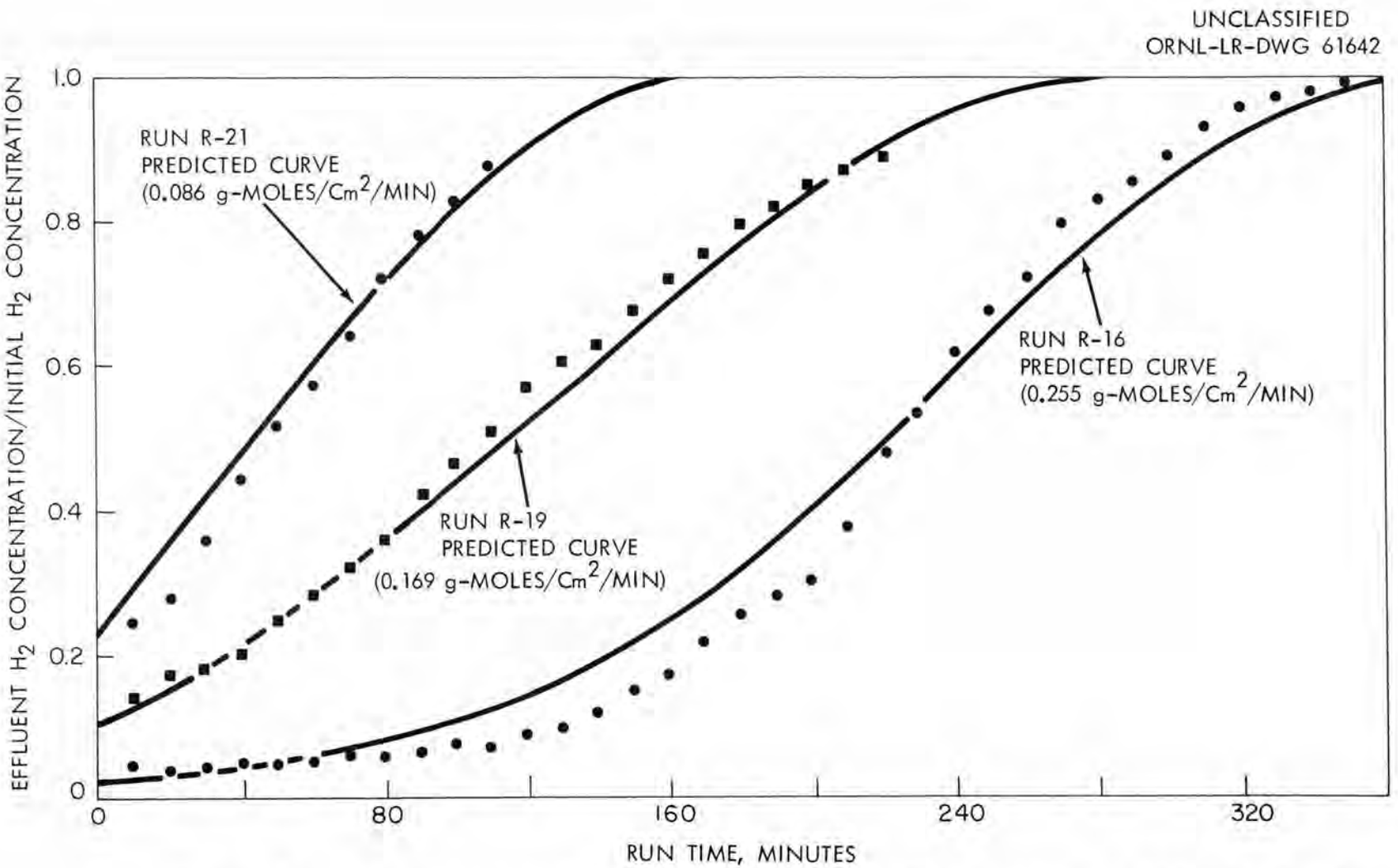

Fig. 6. Comparison between predicted and experimental H_2 effluent concentration history curves for the H_2-CuO reaction showing dependence of mass flow rate.

2. F. A. Anderson, "Proposed Helium Purification System for the Experimental Gas-Cooled Reactor (EGCR)," ORNL-2819, October 2, 1959.

3. C. D. Scott, B. C. Finney, and J. C. Suddath, "The Helium Purification System for the Proposed Pebble Bed Reactor Experiment," ORNL-CF-60-10-31, October 25, 1960.

4. F. Hastings Smyth and H. S. Roberts, "The System Cupric Oxide, Cuprous Oxide, Oxygen," J. Am. Chem. Soc., 42, 2582-2607 (1920).

Distribution

1. E. L. Anderson, Jr. (Washington AEC)
2. R. E. Blanco
3. J. C. Bresee
4. K. B. Brown
5. C. V. Chester
6. F. L. Culler, Jr.
7. R. Daley (Los Alamos)
8. F. L. Dowling (Washington AEC)
9. D. E. Ferguson
10. H. E. Goeller
11. H. B. Graham
12. A. T. Gresky
13. P. A. Haas
14. R. W. Horton
15. E. Lamb
16. J. T. Long
17. R. E. MacPherson
18-19. E. J. Murphy
20. J. J. Perona
21. M. W. Rosenthal
22. A. D. Ryon
23-37. C. D. Scott
38. M. J. Skinner
39. K. G. Steyer (General Atomics)
40. J. C. Suddath
41-44. R. Vallera (General Atomics)
45. J. Vanderryn (ORO AEC)
46. C. D. Watson
47. M. E. Whatley
48. R. G. Wymer
49-51. Laboratory Records
52. Laboratory Records - RC
53-54. Central Research Library
55. Document Reference Section
56. Research and Development Division
57. W. D. Manly
58-72. DTIE