ORNL
MASTER COPY

OAK RIDGE NATIONAL LABORATORY
operated by
UNION CARBIDE CORPORATION
for the
U.S. ATOMIC ENERGY COMMISSION

ORNL-TM-165

70

TRANSURANIUM ELEMENT RESEARCH AND PRODUCTION

ORNL Contribution to FY 1962
Research Supplement to the AEC
Annual Report to Congress

D. E. Ferguson
A. Chetham-Strode
J. R. McWherter

NOTICE

This document contains information of a preliminary nature and was prepared primarily for internal use at the Oak Ridge National Laboratory. It is subject to revision or correction and therefore does not represent a final report. The information is not to be abstracted, reprinted or otherwise given public dis-

LEGAL NOTICE

This report was prepared as an account of Government sponsored work. Neither the United States, nor the Commission, nor any person acting on behalf of the Commission:

A. Makes any warranty or representation, expressed or implied, with respect to the accuracy, completeness, or usefulness of the information contained in this report, or that the use of any information, apparatus, method, or process disclosed in this report may not infringe privately owned rights; or

B. Assumes any liabilities with respect to the use of, or for damages resulting from the use of any information, apparatus, method, or process disclosed in this report.

As used in the above, "person acting on behalf of the Commission" includes any employee or contractor of the Commission, or employee of such contractor, to the extent that such employee or contractor of the Commission, or employee of such contractor prepares, disseminates, or provides access to, any information pursuant to his employment or contract with the Commission, or his employment with such contractor.

ORNL-TM-165

CHEMICAL TECHNOLOGY DIVISION
METALLURGY DIVISION
REACTOR DIVISION

TRANSURANIUM ELEMENT RESEARCH AND PRODUCTION

ORNL Contribution to FY 1962
Research Supplement to the AEC
Annual Report to Congress

D. E. Ferguson, A. Chetham-Strode, and J. R. McWherter

DATE ISSUED

MAY 18 1962

OAK RIDGE NATIONAL LABORATORY
Oak Ridge, Tennessee
Operated by
UNION CARBIDE CORPORATION
for the
U. S. ATOMIC ENERGY COMMISSION

ABSTRACT

This report describes the Transuranium Element Program at Oak Ridge National Laboratory. Research with the heavy elements is discussed along with plans for producing gram quantities of the transuranium elements. The High Flux Isotope Reactor and Transuranium Processing Facility are described, along with the irradiation and chemical processing studies now in progress.

CONTENTS

	Page
1. THE TRANSURANIUM ELEMENTS	4
2. TRANSURANIUM ELEMENT RESEARCH	4
2.1 Chemical Research on the Transuranium Elements	6
2.2 Solid State and Metallurgy of the Transuranium Elements	8
2.3 Nuclear Physics of the Transuranium Elements	8
2.4 New Transuranium Elements	10
3. PRODUCTION OF THE TRANSURANIUM ELEMENTS	12
3.1 High Flux Isotope Reactor	15
3.2 Chemical Processing of the Transuranium Elements	21

1. THE TRANSURANIUM ELEMENTS

Transuranium elements are those with atomic numbers higher than uranium (atomic number 92), which is the heaviest naturally occurring element. On the earth the transuranium elements are all man-made and were unknown prior to 1942. Scientists have now prepared and identified 11 transuranium elements: neptunium, plutonium, americium, curium, berkelium, californium, einsteinium, fermium, mendelevium, nobelium, and lawrencium. The some 90 known isotopes of these elements are shown in Fig. 1.1. All are radioactive and in time will revert to lighter elements.

Some isotopes of the transuranium elements such as neptunium 237, plutonium 239, and americium 241 have already been produced in quantities sufficient to supply normal research needs. The higher isotopes of plutonium and americium and the remainder of the transuranium elements have not, and their production in research quantities is the objective of the U. S. Atomic Energy Commission's transuranium program.

Our knowledge of the transuranium elements began with the discovery of neptunium in 1940 by scientists working at the University of California at Berkeley, and additional elements have been added to the periodic table almost yearly since that time. Some were discovered in most unexpected ways. Routine chemical identifications of the substances contained in the fallout from the first thermonuclear explosion indicated that very heavy uranium isotopes had been formed by the exposure of uranium in the device to the extremely high neutron flux that existed for microseconds. These heavy isotopes, up through mass 255, had quickly decayed by beta emission to form the heavier transuranium elements. Further study of the fallout material resulted in the discovery of einsteinium and fermium. The element most recently added to the periodic table was lawrencium, element 103, prepared and identified in 1960 at the Lawrence Radiation Laboratory.

2. TRANSURANIUM ELEMENT RESEARCH

Transuranium element research includes the study of almost 10% of the known elements. The intensive study of so large a fraction of the atomic population is of inherent interest to the scientist, and under the stimulus of the atomic energy program an active and fruitful field of research has developed around the transuranium elements. Ten new elements and nearly a hundred new isotopes have been synthesized since the discovery of neptunium in 1940. A new concept, the "actinide series," has unified the chemical behavior of the new elements, the phenomenon of spontaneous fission has been found to be a general property of the very heavy isotopes, and investigations of nuclear structure in the transuranium elements have been instrumental in the development of a unified model of nuclear structure. Techniques and ideas developed in transuranium research have found application in such diverse fields as medicine, stellar astrophysics, oceanography, and industrial chemistry, typifying the cross-

UNCLASSIFIED
ORNL-LR-Dwg 65364

CHART OF THE TRANSURANIUM ELEMENTS

OAK RIDGE NATIONAL LABORATORY

FEBRUARY 1962

														Lawrencium-103	Lw-257 8 s α	
													Nobelium-102	No-254 3 s α		
													Mendelevium-101		Mv-255 30 m K	Mv-256 1 h K
											Fermium-100	Fm-248 0.6 m α	Fm-249	Fm-250 30 m α	Fm-251 7.5 h K	Fm-252 36 h α	Fm-253 5 d K	Fm-254 3.38 h α S.F. 0.6 y	Fm-255 21.5 h α S.F. 360 y	Fm-256 3 h S.F. 3.3 h
										Einsteinium-99	Es-246 7.3 m K	Es-247	Es-248 25 m K	Es-249 2 h K	Es-250 8 h K	Es-251 1.5 d K	Es-252 ~140 d α	Es-253 20 d α	Es-254 37 h | 480 d β | α	Es-255 30 d β
									Californium-98	Cf-244 25 m α	Cf-245 44 m K α	Cf-246 35.7 h α	Cf-247 2.4 h K	Cf-248 250 d α	Cf-249 360 y α	Cf-250 10 y α	Cf-251 ~700 y α	Cf-252 2.2 y n S.F. 66 y	Cf-253 18 d β	Cf-254 55 d S.F. 55 d
									Berkelium-97	Bk-243 4.5 h K	Bk-244 4.4 h K	Bk-245 5 d K	Bk-246 1.7 d K	Bk-247 7000 y α	Bk-248 18 h β	Bk-249 290 d β	Bk-250 3.22 h β			
				Cm-238 2.3 h K	Cm-239 ~3 h K	Cm-240 27 d α	Cm-241 35 d K	Cm-242 162.5 d α	Cm-243 ~35 y α	Cm-244 18.4 y α	Cm-245 8000 y α	Cm-246 6600 y α	Cm-247 $\sim 10^7$ y	Cm-248 4.7×10^5 y α	Cm-249 64 m β	Cm-250 >130 y β	
			Curium-96																		
			Americium-95	Am-237 ~1 h K	Am-238 1.9 h K	Am-239 ~2 h K	Am-240 50 h K	Am-241 462 y α	Am-242 152 y | 16 h K | β	Am-243 8×10^3 y α	Am-244 26 m β	Am-245 2 h β	Am-246 25 m β				
Plutonium-94	Pu-232 36 m K	Pu-233 20 m K	Pu-234 9 h K	Pu-235 26 m K	Pu-236 2.7 y α γ	Pu-237 40 d K	Pu-238 89.6 y α	Pu-239 2.44×10^4 y α	Pu-240 6.6×10^3 y α	Pu-241 13.2 y β	Pu-242 3.8×10^5 y α	Pu-243 4.98 h β	Pu-244 7×10^7 y α	Pu-245 11 h β	Pu-246 11 d β	
Neptunium-93	Np-231 50 m K	Np-232 ~13 m K γ	Np-233 35 m K	Np-234 4.4 d K	Np-235 1.1 y K	Np-236 22 h | >5000 y β | β	Np-237 2.20×10^6 y α	Np-238 2.10 d β	Np-239 2.33 d β	Np-240 7.3 m | 1 h β | β	Np-241 16 m β				

MODES OF RADIOACTIVE DECAY

- α Alpha particle
- β Beta particle
- S.F. Spontaneous fission
- K Electron capture

Fig. 1.1. Chart of the transuranium nuclides.

fertilization of research so typical of contemporary science.

Much of the work on transuranium elements has been accomplished in spite of severe difficulties due to the toxicity of these materials and the tiny amounts of the heavier isotopes that have been available up till now. With the formation of a national program and planned facilities for large-scale production of transuranium isotopes, the limitations on quantity will be largely overcome. Existing research programs can be extended by the application of more powerful methods of investigation suited to ordinary chemical-scale operations. Some previously inaccessible areas of study may be explored by existing techniques, and the work of synthesis of new elements and isotopes will be extended to further limits. Some of the transuranium research activities that will benefit most from the production program are indicated briefly in the following paragraphs.

2.1 Chemical Research on the Transuranium Elements

The development of tracer and submicrochemical techniques has made it possible to learn a great deal about the general chemistry of the transuranium elements. From the results of many experiments, some with only a few atoms of the synthetic elements, the elements from actinium to element 102 have been shown to be members of a second rare-earth series with properties rather similar to one another and to the naturally occurring rare earths. Current research continues to elaborate both the similarities and the differences in chemical behavior among the two groups of elements. Of particular interest are the minute individual differences in chemical behavior between members of the same group---for example, the amounts of a transuranium ion in solution absorbed by ion exchange resins (Fig. 2.1). These and other problems in the descriptive inorganic chemistry of the heaviest elements are now being attacked by a combination of spectroscopic and structural techniques. Much progress can be expected when larger quantities of the elements are made available.

Both the rare-earth and actinide elements are characterized by the presence of from one to fourteen so-called "f electrons" in the atom, the outside electrons remaining nearly identical. These f electrons are rather deeply buried in the electronic cloud of the rare earths, but seem to extend much farther out from the nucleus of the transuranium elements. Although such f electrons occur in other regions of the periodic table, the transuranium elements may be the only region in which this type of electron takes part in the formation of chemical bonds. Molecular spectroscopy, x-ray diffraction, and allied structural studies can be expected to yield much information on these questions.

Perhaps the most significant chemical implication of transuranium element research arises simply from the fact that these elements have the heaviest nuclei and most complicated electronic structure of the known elements. The basic theoretical treatments of atomic electrons and chemical forces depend strongly on

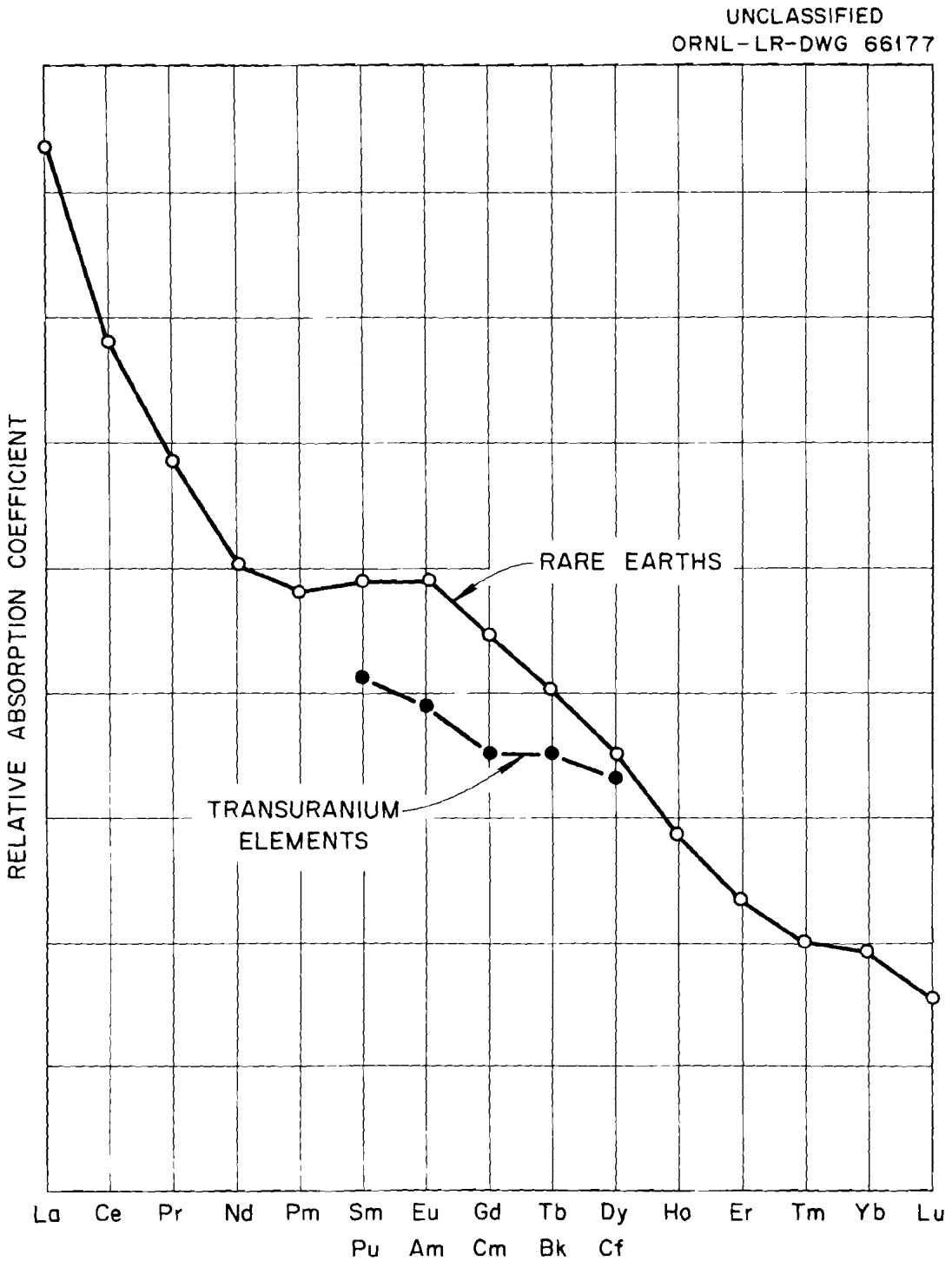

Fig. 2.1. Absorption of some transuranium elements on ion exchange resin. The vertical scale on this figure measures the fraction of the transuranium element absorbed on a sulfonated polystyrene cation exchange resin from a solution of 6-normal hydrochloric acid.

concepts derived from experiments on the lightest elements. It may happen that intensive study of the properties of the transuranium elements will require extension and modification of these theories. A promising start on a few of the elements available in sufficient quantity has been made already by the methods of quadrupole and atomic beam resonance and the theoretical study of optical spectra. The insights to be gained in this work will pay large dividends in a deeper understanding of all the elements.

2.2 Solid State and Metallurgy of the Transuranium Elements

The rather extensive work of recent years on the solid compounds and metals of uranium, neptunium, and plutonium has revealed a research area of rather unexpected richness and complexity. Even the binary compounds with common elements like oxygen display a wide range of structures and compositions, frequently with continuous transition regions between the simple atomic ratio, or stoichiometric, phases (Fig. 2.2).

The metallic structure and properties of plutonium metal have been studied intensively because of its technological importance in weapons and power reactor programs. The metal is almost a museum of unusual behavior, exhibiting no less than six structural forms, some with semiconductor-like electrical resistivity, negative coefficients of thermal expansion, and most unusual atomic arrangements. These studies have served as a stimulus to the recent interest in metal physics in general and have provided important insights in this field.

Preliminary indications are that the solid state physics of the heavier transuranium elements may be equally fruitful, but the detailed examination of these elements must await the production and distribution of the larger quantities of material resulting from planned production programs.

2.3 Nuclear Physics of the Transuranium Elements

Nuclear physics is concerned with the properties of the different atomic nuclei (isotopes) rather than with the elements as such, and one of the principal goals of the large-scale transuranium product program is the provision of a wide range of isotopes in useful amounts. At the heaviest end of the isotopic range additional target materials will be made available for cyclotron bombardment and the production of new elements and isotopes. At the same time, many lighter transuranium isotopes can be made in high purity by a combination of reactor irradiations and special separations. The result will be the extension of theoretically and practically important studies to new areas.

As a result of existing programs, the cross sections, or probabilities, for neutron capture and fission have been measured for most of the presently important reactor fuels such as uranium-235 and 233 and plutonium-239. With the development of

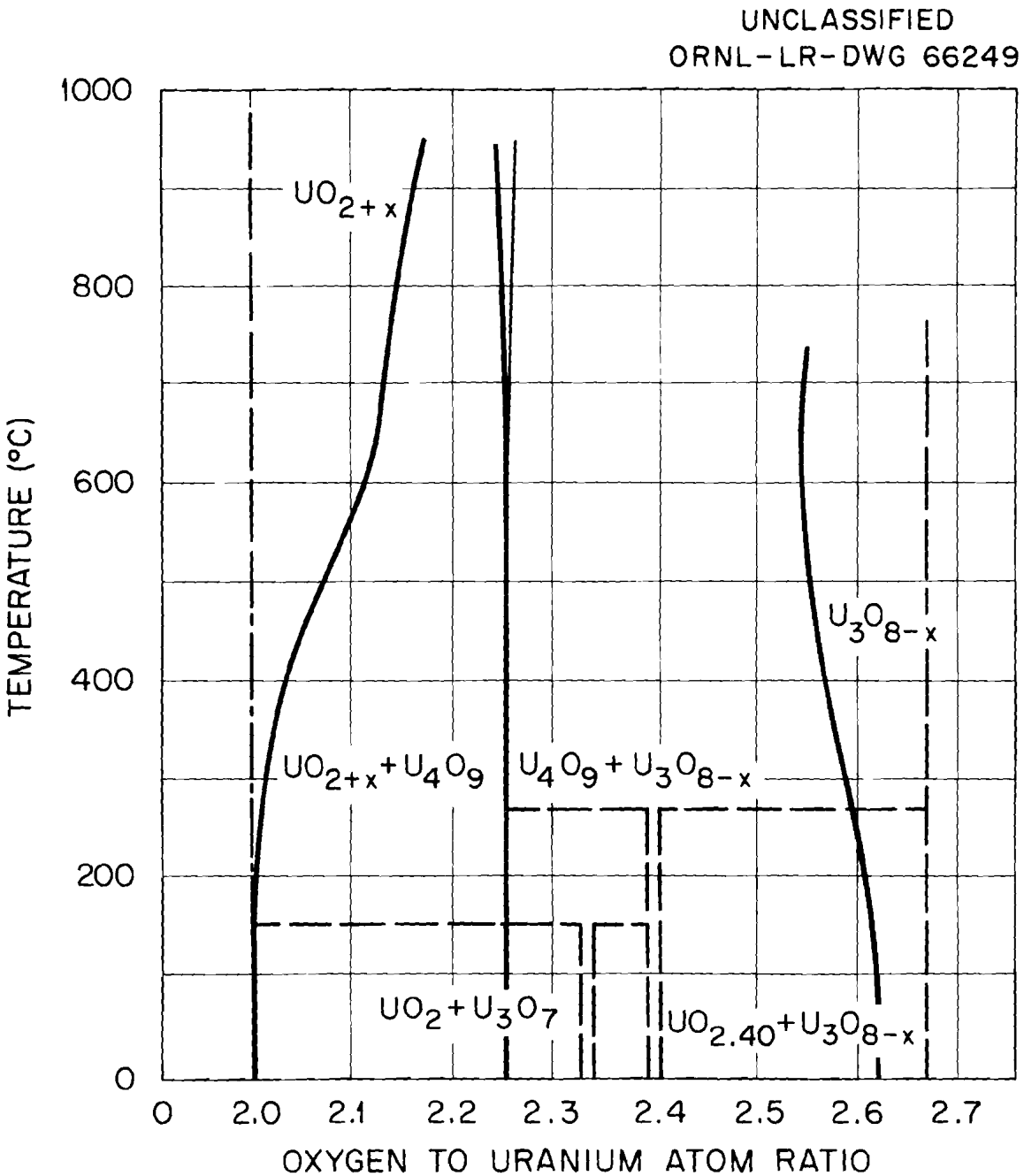

Fig. 2.2. Tentative phase diagram for the uranium-oxygen system. This figure illustrates the compounds formed between uranium and oxygen as a function of temperature and the relative amounts of uranium and oxygen. The several areas on the diagram represent specific compounds or mixtures of compounds thought to exist under the indicated conditions.

economically feasible power reactors, such precision measurements must be extended to many more of the transuranium isotopes. This work will require gram quantities of isotopically pure material. The experimental and theoretical attempts to understand the fission process itself are allied to this work and will receive continued emphasis as more fissionable and spontaneously fissioning isotopes become available.

The study of radioactive decay by alpha-particle emission has made much progress due to the large number of alpha-particle-emitting isotopes discovered in the transuranium elements. Nuclear spectroscopy of these isotopes has yielded a systematics of alpha decay (Fig. 2.3), the beginnings of a systematic correlation of nuclear energy levels. The combination of large-scale reactor production with particle accelerator techniques holds great promise for extending these correlations and the understanding of nuclear structure derived from them.

The experimental results already obtained in the investigation of nuclear energy levels of transuranium isotopes have contributed greatly to the development of our most successful theories of nuclear structure. There remain large gaps in this understanding, however, and much more experimental work on the whole range of isotopes accessible will be required. This field will continue to be one of the most active in transuranium research and will receive additional impetus from the production and isolation programs planned. With sufficient material available, the full range of cyclotron, reactor, and spectroscopic techniques can be brought to bear on this important area.

2.4 New Transuranium Elements

In some respects, new-element synthesis is a re-creation of the cosmic processes that formed all the chemical elements. There is evidence that transuranium elements are now being made on a huge scale in supernovae. Such processes likely preceded the formation of our own solar system, but such transuranium elements would have decayed long ago to more stable elements in the time since the solidification of the earth. The production program now planned bears more than passing similarity to these stellar processes.

The discovery of each successive new element has been more difficult than the last and has depended critically on the availability of suitable target isotopes. It is impossible to set a reliable limit on the ultimate number of new elements that can be made; however, it appears now that at least several more will result directly or indirectly from the increased production and research effort.

Among the interesting possibilities for these yet unknown elements are chemical properties quite different from those of the known transuranium elements. Element No. 104, for example, should resemble zirconium and hafnium rather than other transuranium elements. Investigating its chemistry in the few seconds before decay will present an interesting experimental challenge.

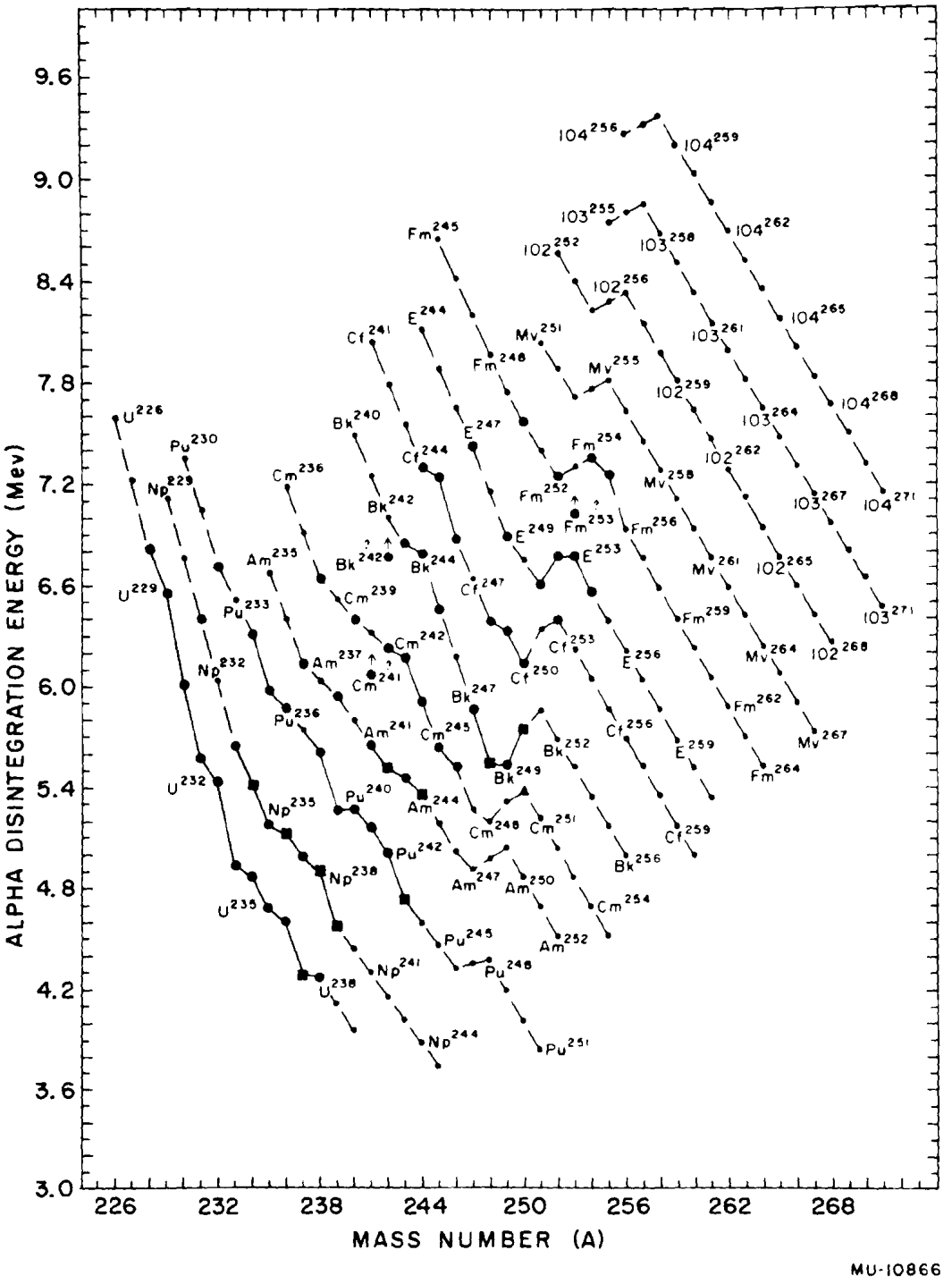

Fig. 2.3. Alpha decay energies. The total energy released by alpha-particle emission is shown here as a function of mass number for most of the known alpha-emitting radioisotopes. Dotted lines indicate the extrapolated predictions for undiscovered isotopes. Systematic correlations of this type have been extremely valuable in transuranium-element research.

Some recent theoretical work has indicated the possibility of new types of fission and unusual nuclear shapes in the heaviest elements. Exploration of these questions is an exciting prospect.

3. PRODUCTION OF THE TRANSURANIUM ELEMENTS

A very high-neutron-flux reactor (the High Flux Isotope Reactor, HFIR) and a highly specialized chemical processing facility (the Transuranium Processing Facility, TRU) are being built at Oak Ridge National Laboratory for production of gram quantities of the transuranium elements. The heavier transuranium elements can be readily made in small amounts by bombarding uranium or plutonium nuclei with heavy ions in an accelerator. To prepare larger amounts, however, it is cheaper to use a nuclear reactor and transmute plutonium by successive neutron captures into the desired elements. This process requires many years at neutron fluxes available in present research reactors, 5×10^{14} neutrons cm^{-2} sec^{-1}, and much of the material formed decays back to lighter elements during the long irradiation time. For this reason, the neutron flux designed for the HFIR is 3 to 5×10^{15} neutrons cm^{-2} sec^{-1}, almost ten times that now available in research reactors.

Starting with plutonium 239, the heaviest element available in large quantities, the capture of 13 neutrons in an atom is required to reach californium 252 (Fig. 3.1). In a nuclear reactor, most of the plutonium is lost by fissioning and only 30% is transmuted to plutonium 240. A similar loss occurs at each of the even-odd isotopes up the chain of heavier elements. For instance, another 20% is lost by fissioning of plutonium 241 and 9% by fissioning of curium 245; eventually only 0.3% of the original material remains when californium 252 is reached. It is therefore necessary to start with thousands of grams of plutonium 239 to obtain grams of californium. About 12 successive irradiations are required for complete conversion of the original plutonium 239 into berkelium, californium, einsteinium, and fermium with a good yield, and the material must be chemically processed after each irradiation to recover products and unused feed material. The series of operations involved is shown in Fig. 3.2, starting with the initial irradiation of plutonium 239 and ending with the separated transuranium elements for research.

Since the fissioning of plutonium 239 and 241 produces large quantities of heat, the early stages of the irradiation should be made in a large reactor at moderate neutron fluxes. Plutonium 239 in 10-kg batches is now being irradiated at Savannah River as a first step in this process. This irradiation will be continued until most of the fissionable isotopes of plutonium are passed, at which time only about 1 kg total of plutonium 242, americium 243, and curium 244 will remain along with 9 kg of fission products from the plutonium. The plutonium, americium, and curium will then be separated chemically from the highly radioactive fission products and shipped to Oak Ridge National Laboratory.

UNCLASSIFIED
ORNL-LR-DWG 64600-R1

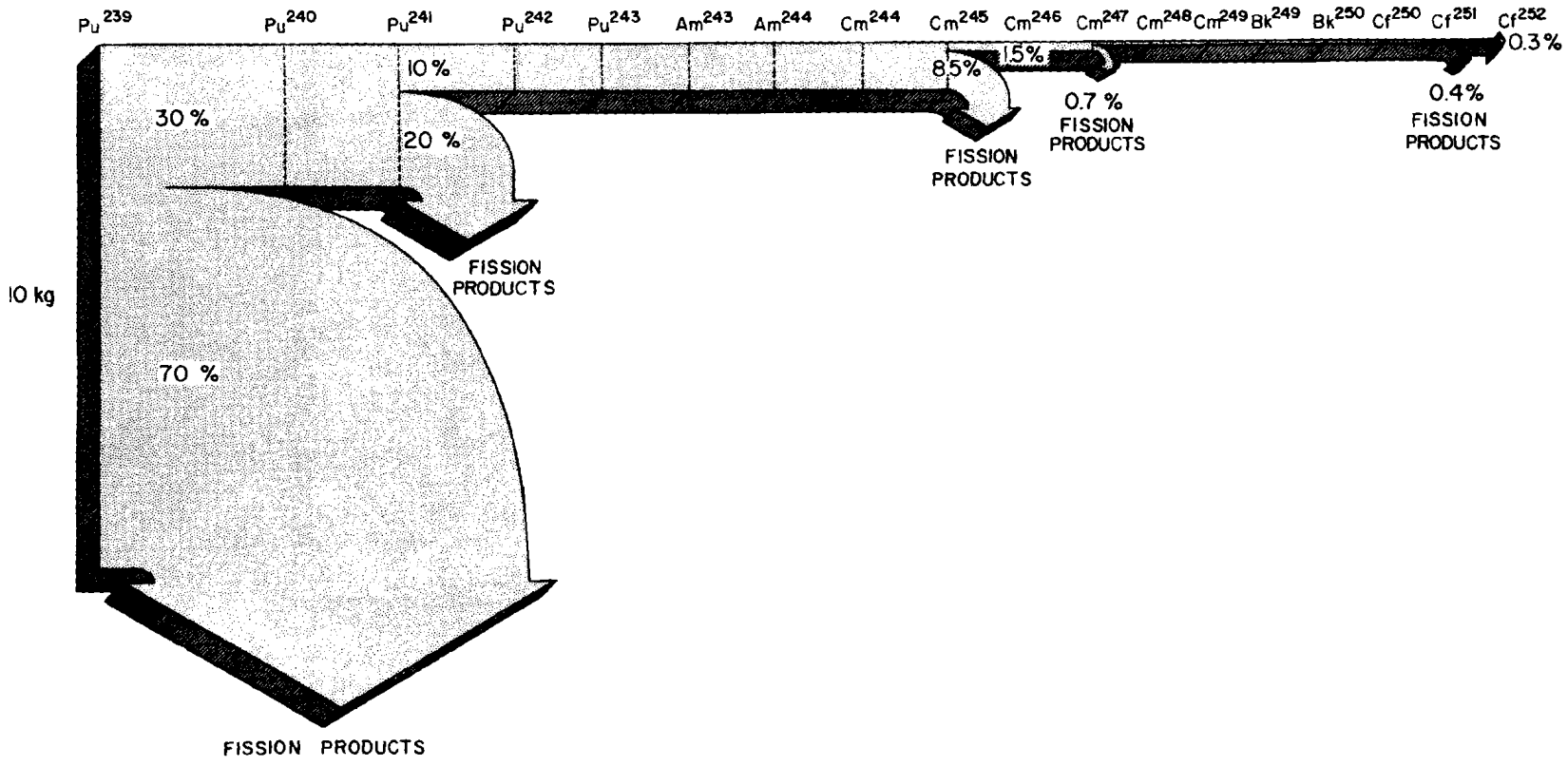

Fig. 3.1. Production of the heavy transuranium elements from plutonium 239. This chart illustrates the major path of transuranium element production by successive neutron captures.

UNCLASSIFIED
ORNL-LR-DWG 65166

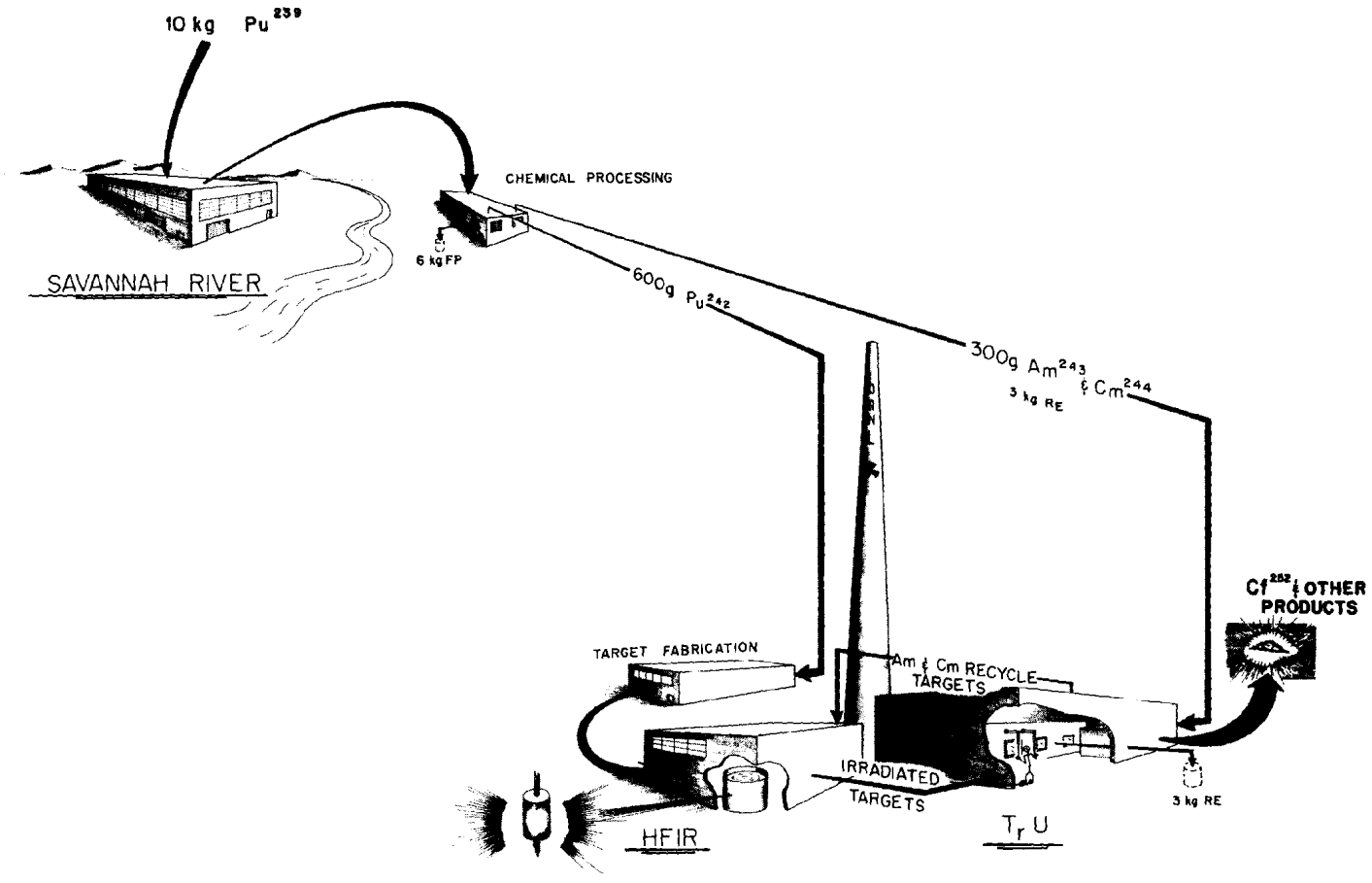

Cf252 PRODUCTION SCHEME

Fig. 3.2. Production scheme for the transuranium elements.

Further irradiation of the plutonium 242, americium 243, and curium 244 for 12 to 18 months in the HFIR will produce a fraction of a gram of berkelium, californium, einsteinium, and fermium, and almost 100 grams of curium 246 and 248. After chemical processing to recover the transuranium elements, the curium isotopes can be reinserted in the HFIR for repeated four-month periods to make gram quantities of californium, hundreds of milligrams of berkelium, tens of milligrams of einsteinium, and a milligram of fermium. These materials can then be isolated chemically for use in various research programs.

When this point is reached, it will be possible with the HFIR and TRU to make many transuranium isotopes of great interest to researchers. For instance, irradiation of the curium isotopes for a short period, 1 day, will produce 100 mg of berkelium 249 and 1.5 mg of californium. Californium produced in this way is mostly californium 250 and 251---isotopes that do not have the problem of rapid spontaneous fission associated with them as do californium 252 and 254. This material can be used to study the chemistry of californium without resorting to heavily shielded cells. In the same way a gram of californium may be irradiated for about 30 days in the HFIR to produce about 60 milligrams of einsteinium, one milligram of fermium, and perhaps measurable amounts of still heavier elements. Also, while stored in TRU many of the isotopes decay by alpha emission to isotopes of lighter elements in an almost pure form. For instance, a gram of californium stored for six months will produce 100 mg of almost pure curium 248 by decay of californium 252. This curium can then be isolated chemically for research.

It is anticipated that the HFIR will be in operation by January 1964 and the first fully irradiated targets will be ready for processing by July 1965. Processing of these targets will start about October 1965 in the TRU facility to provide about 200 milligrams of californium and a corresponding quantity of berkelium, einsteinium, and fermium for research early in 1966 (Fig. 3.3). This production will continue, and the first gram of californium will be reached in 1968.

Smaller amounts of transuranic elements will be available before these dates. About 1 gram of curium and 10 grams of americium are now being irradiated in research reactors at the Idaho Reactor Test Station and will be processed in 1963 and 1964. This irradiation should yield about 100 micrograms of californium in 1963 and another 200 micrograms in 1964. At least two HFIR targets will be discharged after six months' irradiation for processing in 1965, making 1 milligram of californium available for research uses in that year. The products of these small irradiations will be processed in the facilities at Oak Ridge National Laboratory used for development of processes for the TRU facility.

3.1 High Flux Isotope Reactor

The HFIR is now under construction at Oak Ridge National Laboratory (Fig. 3.4). The reactor will cost $12,000,000 and is scheduled to begin operation in

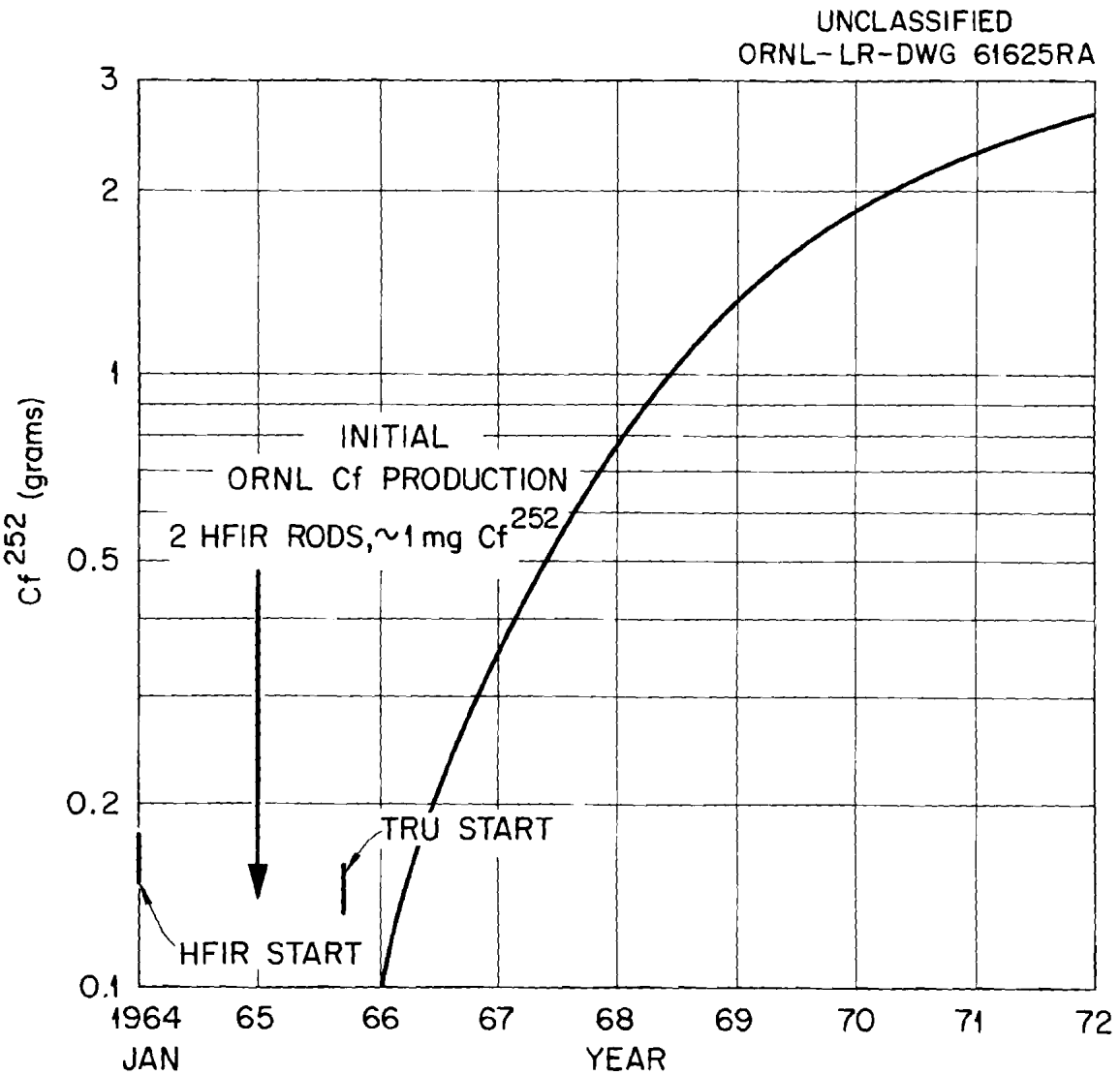

Fig. 3.3 Production of separated californium. This chart gives the scheduled accumulated production of californium by the HFIR and TRU.

Fig. 3.4. Photograph of the HFIR Under Construction at ORNL.

January 1964. The HFIR is intended primarily to produce gram quantities of the transuranium elements, and its type, size, and power level were chosen on this basis. However, with the extra facilities being built into it, the HFIR will be useful for many experiments requiring very high neutron fluxes.

The design chosen for the HFIR was a fuel element in the shape of a hollow cylinder surrounding a central region filled only with water (Fig. 3.5). This arrangement, called a flux trap, produces a much higher slow-neutron flux in the central region than exists in the fuel element itself. The fast neutrons made in the fuel element by the fissioning of uranium 235 pass from all sides into this central region, where they are slowed down and "trapped" by the water. The useful neutron flux in this central region will be 3 to 5 x 10^{15} neutrons cm^{-2} sec^{-1}, almost a factor of 10 greater than the flux in existing research reactors.

The fuel element itself is made in two concentric rings to facilitate handling. The inner ring contains 171 fuel plates and the outer ring 369 plates. The plates, involute in shape, are made of a uranium 235 alloy sandwiched between two sheets of aluminum. Each plate is only 1/20 of an inch thick and is spaced in the fuel element 1/20 inch from its adjacent plates. While the reactor is in operation, cooling water flows down between the plates to remove the heat produced by fissioning of the uranium 235 fuel. At full power the reactor generates 100,000 kilowatts of heat. This heat is removed by the cooling water and dissipated in a nearby cooling tower.

The heavy elements to be bombarded by neutrons are encased in aluminum tubes 2 feet in length and 3/8 inch in diameter which are welded shut at each end to form a target rod. In the central region of the reactor core there is space for 31 such target rods. Heat is also generated in these rods due to fissioning of some of the transuranium elements in the intense neutron flux, and the rods are cooled by flowing water down along them through the target region.

A large cylinder of beryllium metal surrounds the fuel element and acts as a neutron reflector. The control rods, which are actually "control cylinders" formed from thin metal plates, operate in the annulus between the fuel element and the beryllium reflector. These control cylinders contain silver and nickel, which when inserted into the reactor absorb neutrons readily and quench the nuclear reaction.

The reactor is mounted in a large tank through which the cooling water flows (Fig. 3.6). The cooling water enters through two large pipes at the top and flows down through the reactor assembly and out through a large pipe at the bottom. The heated water is then pumped to large heat exchangers containing about 40 miles of tubing needed to dissipate the 100,000 kilowatts of heat from the reactor. The tank containing the reactor will be submerged in one end of a long pool of water. The reactor itself will be 26 feet below the water level in the pool. The water above the reactor provides the needed shielding and allows access to the top of the reactor

ORNL-LR-DWG-65776
UNCLASSIFIED

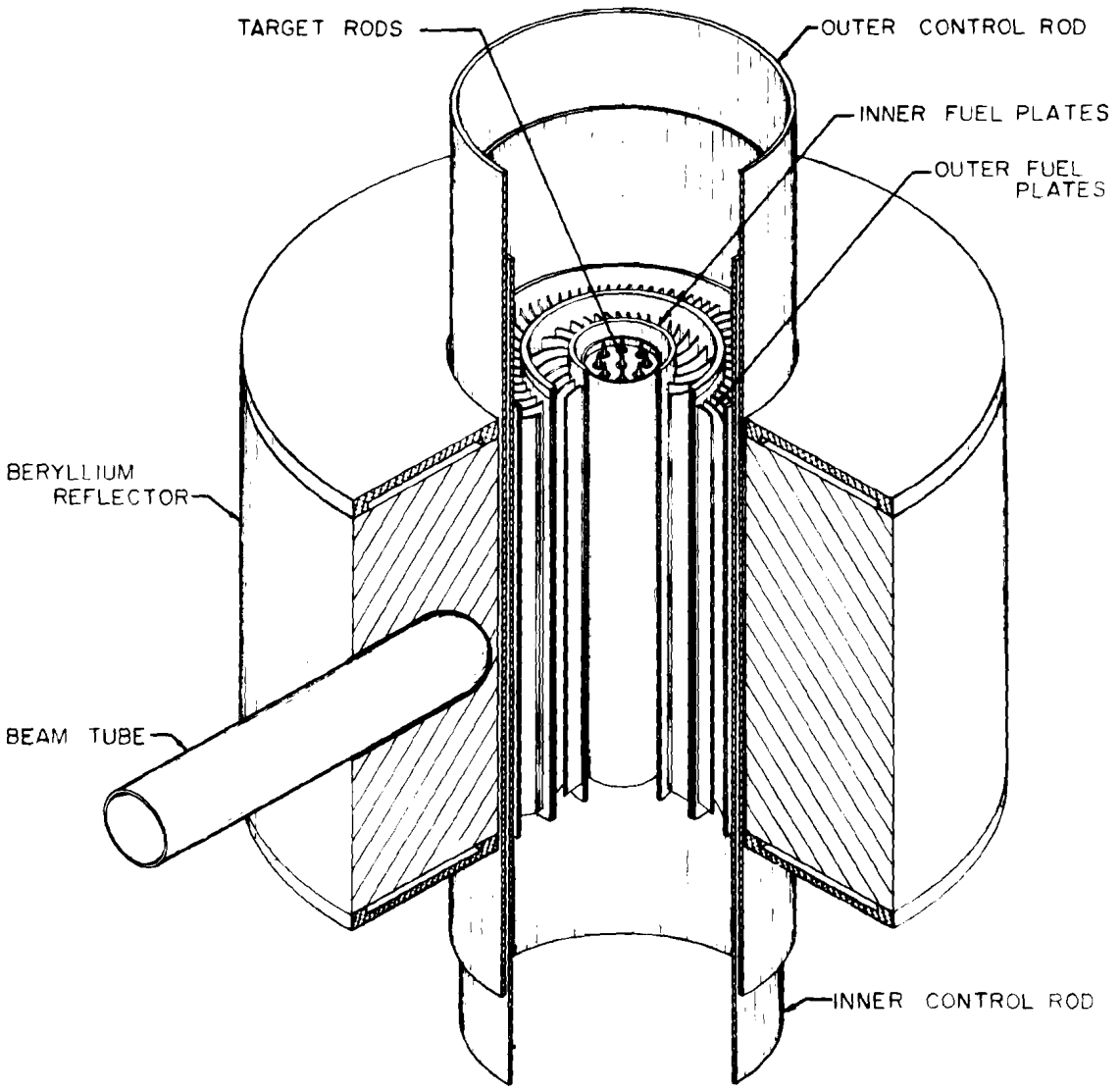

Fig. 3.5. HFIR core. Target rods, shown schematically at the center of the core, are surrounded by concentric annular regions of fuel plates, control rods, and beryllium reflector.

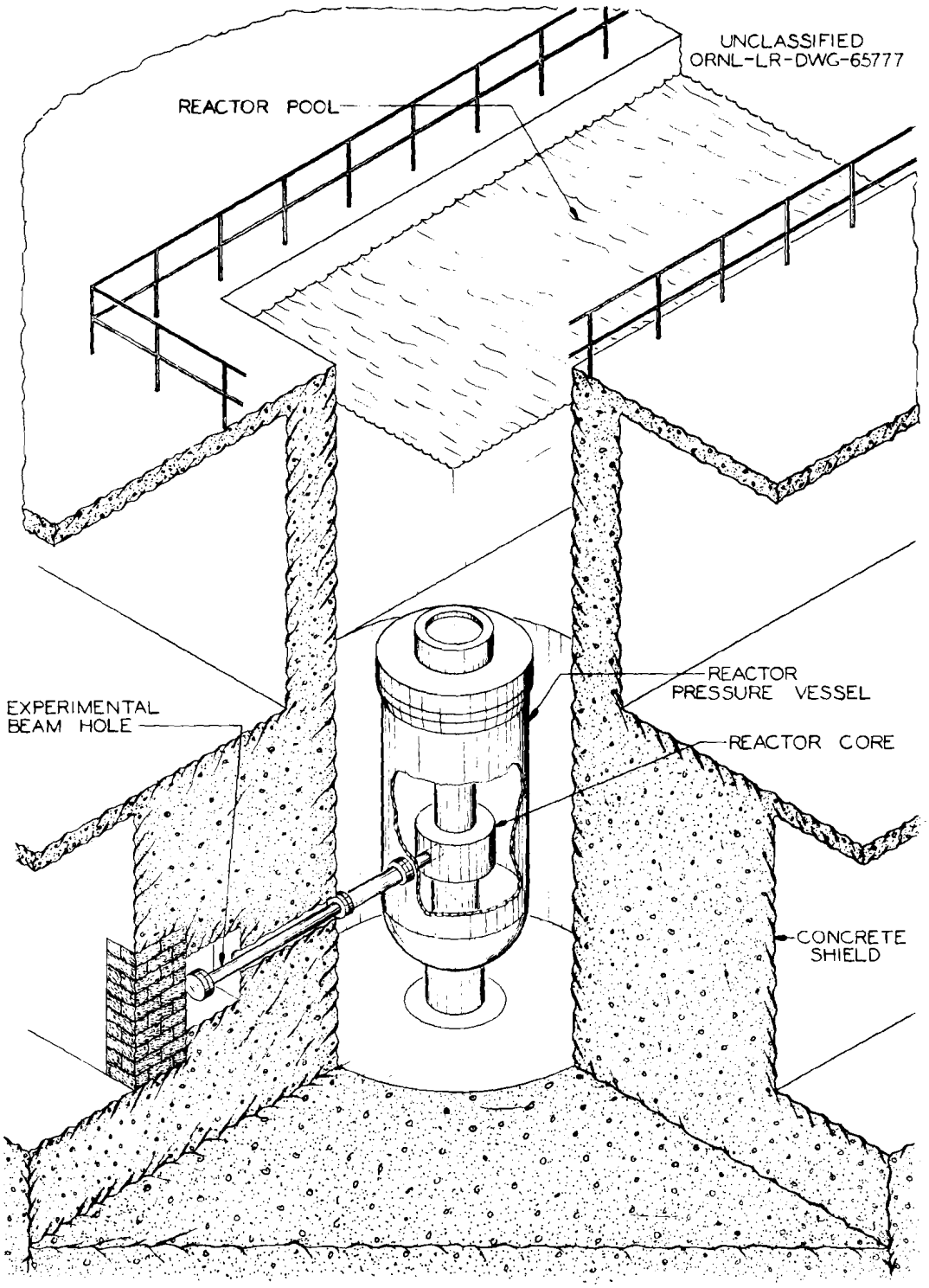

Fig. 3.6. HFIR Vessel and Shield. The reactor core is contained in a cylindrical pressure vessel with a removable, flat, upper head.

for refueling or changing the target rods. The remainder of the long pool will be used to store used fuel elements, since they will be highly radioactive and will require almost as much shielding for safety as the reactor itself.

In addition to the central region for the production of transuranium elements, a number of other positions in the reactor are being equipped so that many experiments requiring intense neutron fluxes may be done simultaneously. There are 28 vertical holes into the beryllium reflector which can be reached from above. These holes will provide scientists with a flux of about 1×10^{15} neutrons cm^{-2} sec^{-1} for their experiments. In addition, there are seven large tubes provided for experiments requiring more space.

It is expected that the HFIR will be completed by July 1963. Engineers will then require about six months for intensive checks and tests before the reactor operates at full power in 1964.

3.2 Chemical Processing of the Transuranium Elements

The chemical separations required for production of the heavier transuranium elements present a combination of problems not previously encountered in the atomic energy program. Americium, curium, berkelium, californium, einsteinium, and fermium are very similar in their chemical behavior and likewise similar to the rare-earth elements that are produced by fission. Present methods of separation in use for spent reactor fuel are inadequate for their purification and isolation. The transuranium elements may best be isolated in strong chloride solutions, which introduce severe corrosion problems. The toxicity of these very radioactive elements is much greater than that of plutonium, inhalation of a small particle of californium, for example, being equivalent to inhalation of 100,000 particles of plutonium of the same size. In addition, several of the heavier isotopes, such as californium 254 and fermium 256, fission spontaneously at a rapid rate to produce not only gamma rays but neutrons from which persons handling the elements must be protected. The shielding and containment of the highly complex chemical separation process therefore must be equivalent to those of a small nuclear reactor. Because of the difficult chemical separations and the extreme hazards involved in handling these elements, no existing AEC facility is capable of doing all the chemical processing involved, and a new facility, the Transuranium Processing Facility (TRU), is being designed and built at Oak Ridge National Laboratory. The facility, estimated to cost $8,700,000, will be ready for operation in 1965, when the first irradiated targets are ready for processing.

Functions of the TRU Facility. The TRU facility is being designed for the following major functions: chemical processing of irradiated HFIR targets to obtain in pure form the heavy elements for research, recovery of the unused feed material and refabrication of it into targets for further irradiation, packaging of the products for shipment to experimental laboratories at ORNL and to other sites, preparation of the americium-curium fraction from the original plutonium 239 irradiation for

reirradiation in the HFIR, preparation of special targets for irradiation experiments in the HFIR, and chemical processing of the special experimental irradiation products.

The study of chemical procedures for isolating large quantities of the transuranium elements, now being carried on at Oak Ridge National Laboratory, includes study of the basic chemistry of the heavy elements; development of separations processes; development of a method for fabricating HFIR targets; and equipment design, development, and testing. Processes have already been developed which appear satisfactory in laboratory equipment on a small scale. Further testing is required in equipment and with procedures suitable for remote operation behind the heavy concrete shields of the TRU facility.

The process under development for the HFIR target processing has many chemical steps (Fig. 3.7). The aluminum-clad targets are first dissolved in hydrochloric acid. The solution, containing aluminum, unused target material, fission products, and the several heavy elements desired, is carefully adjusted to chemical concentrations such that the transuranium elements are selectively extracted into an organic solvent mixture, a tertiary amine mixed with diethyl benzene. The extraction is not complete in one step, and is carried out in a mixer-settler or pulsed column contactor with many stages.

The transuranium elements thus separated from the unwanted target constituents are separated from one another in three additional steps. The americium and curium are isolated in a second solvent extraction with a different solvent, di-2-ethylphenylphosphonic acid. These two elements are to be returned as a mixture to the HFIR for reirradiation and need not be separated from each other. The berkelium, which is isolated next, is first oxidized to a highly extractable form so that it can be separated from the californium, einsteinium, and fermium. Finally, the last three elements are separated by an ion-exchange procedure similar to that used for separating the rare-earth elements. All these operations require highly specialized equipment and instrumentation, since they must be carried out in a sealed cubicle shielded from the operators by 4.5 feet of high-density concrete.

After the elements have been separated from one another, additional purification will be needed in many instances to obtain the ultrahigh purity required for research purposes. This final purification will be accomplished in small glass equipment to avoid contamination of the products by equipment corrosion. Even though this operation is on a small scale, a heavily shielded, sealed cubicle is still required to protect the operators.

Americium and curium either from the first large-scale irradiation at Savannah River or recovered from an HFIR target are highly radioactive and also must be handled in a sealed cubicle inside a heavy concrete shield. Therefore a process and remotely operable equipment are being developed for target fabrication. In the process the americium-curium is first precipitated from solution and converted

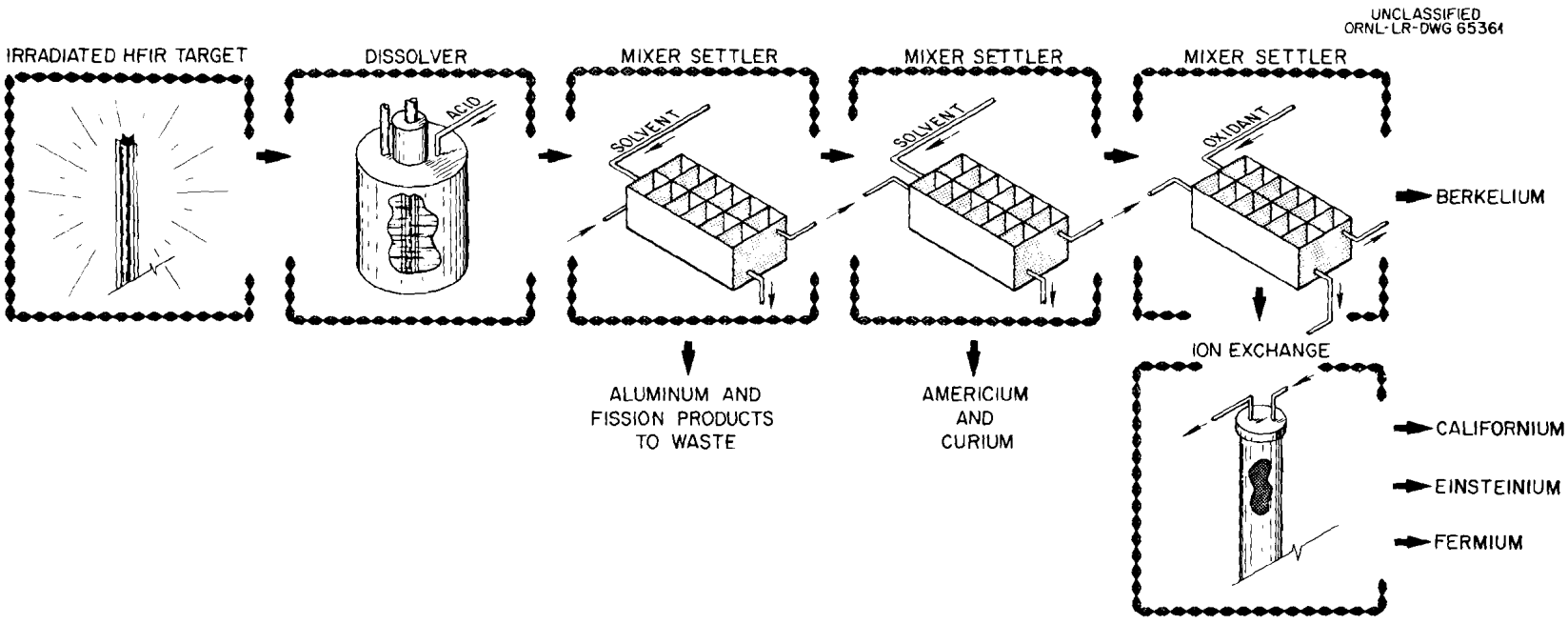

Fig. 3.7. Steps in the processing of irradiated HFIR targets.

to an inert oxide by heating in an electric furnace. The oxide is mixed with powdered aluminum and pressed into a pellet, and the pellets are inserted into a precision aluminum tube, which is closed by welding to form the irradiation target.

The same equipment and procedure will be used to prepare other highly radioactive elements, such as californium, for irradiation in the HFIR as part of the research program. In some cases, such as when large quantities of californium are to be shipped, the material will be encapsulated in this manner to permit safe shipment to another site.

Features of the Transuranium Processing Facility. The TRU design provides for nine cells, eight laboratories, and space for necessary auxiliaries. The cells are to be arranged in a line and will have 4.5 feet of magnetite concrete shielding. This concrete was chosen for its high iron and water content, both of which are effective in stopping the high-energy neutrons emitted by spontaneous fission of the transuranium elements. Each cell will have a viewing window and master-slave manipulators. Two cells will be used for chemical analysis of highly radioactive solutions and materials for process control. Four cells will be used for chemical processing; three of these will contain the main line of process equipment, and the fourth will be used for special separations to prepare the ultra-high-purity transuranium elements needed for research. Two more cells will be provided for making irradiation targets for the HFIR and for packaging transuranium elements for shipment. A final cell will be used for inspection of HFIR targets before they are shipped to the reactor. The laboratories will be equipped for handling alpha active materials not requiring heavy concrete shielding and will be used for chemical analyses and laboratory development work involving alpha active materials.

The cells will be separated from one another by 2 feet of concrete shielding. This will allow maintenance or alterations in one cell without extensive cleaning of the other cells. At the viewing-window level (Fig. 3.8), an alpha-tight box or cubicle will be installed in the cells to contain the very hazardous materials to be handled. This cubicle is not normally needed in a chemical processing cell, but will be required in the TRU facility because of the extreme radiological hazard of the transuranium elements. Four separate air-cleaning systems will be used: a process-vessel vent system complete with a scrubber and three absolute filters in series; a cubicle ventilation system which recirculates air from the cubicles through an elaborate air conditioning and cleaning system; a cell ventilation system which passes air through the cells but outside the cubicles and exhausts through absolute filters; and the building ventilation system which provides air conditioning for the inside of the sealed building and also exhausts through absolute filters. All these systems will be equipped with radiation detectors to warn the operators if any radioactive material leaks to the outside.

Behind the cubicle in each cell, there will be a deeper cell space for the tanks and process vessels which normally require little maintenance. All the oper-

UNCLASSIFIED
ORNL-LR-DWG 65598

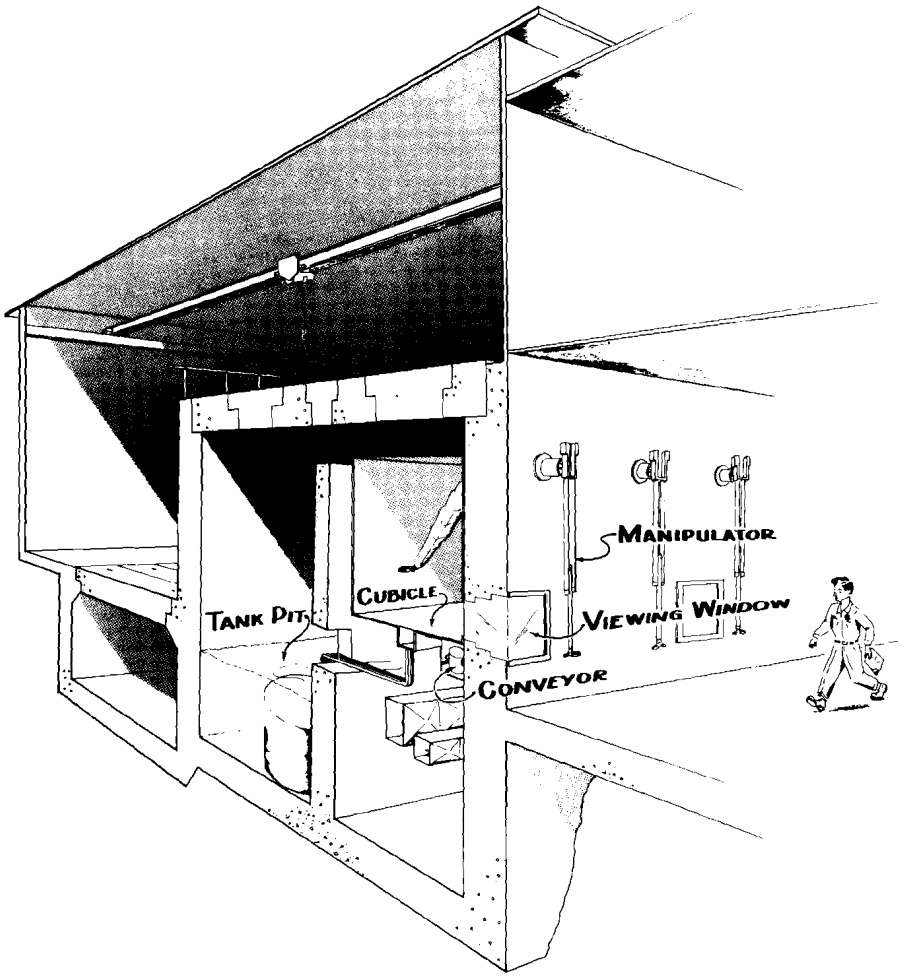

Fig. 3.8. Transuranium processing facility. This cutaway view shows a cross-section of a processing cell of TRU.

ating equipment which does require repair and adjustment will be enclosed in the cubicles, and repairs and adjustments will be made with the master-slave manipulators. Small pieces of equipment, samples, and supplies can be put into or removed from the cubicles by means of an intercell conveyor. The conveyor is so designed that the supplies or samples are moved in a sealed can which in turn is sealed to the cubicle before being opened so that the sealed cubicle is never opened to the cell atmosphere. Large pieces of equipment contaminated with transuranium elements will be removed from inside the cubicles by a sealed, shielded caisson. This caisson is operated from above after blocks of concrete shielding over the cells have been removed. The principle of containment is the same as that of the conveyor, and the cubicle is never opened to the cell atmosphere in removing or replacing defective equipment.

The facility is being designed with three lines of containment because of the hazard of the transuranium elements: (1) the equipment or cubicle, (2) the sealed cell structure, and (3) the sealed building surrounding the cells.

The process equipment in the TRU facility will be of an entirely new design in many respects because of the conditions under which it must be operated. This equipment is now being designed at Oak Ridge National Laboratory, and during the years that the facility itself is being built, the equipment will be tested and perfected. The building and cells will be completed in 1964, and the equipment will be ready for installation and operation in 1965.

DISTRIBUTION

1. R. D. Baybarz
2. M. Bender
3. J. E. Bigelow
4. R. E. Blanco
5-7. A. L. Boch
8. B. F. Bottenfield
9. E. J. Breeding
10. J. C. Bresee
11. K. B. Brown
12. W. D. Burch
13. R. D. Cheverton
14. A. Chetham-Strode
15. H. C. Claiborne
16. T. E. Cole
17. L. T. Corbin
18. F. L. Culler
19. R. I. Deaderick (K-25)
20-24. D. E. Ferguson
25. H. E. Goeller
26. H. B. Graham
27. A. T. Gresky
28. C. E. Guthrie
29. P. A. Haas
30. F. L. Hannon
31. R. E. Leuze
32. M. H. Lloyd
33. A. L. Lotts
34. T. S. Mackey
35. H. G. MacPherson
36. R. B. Martin (ORO)
37. J. R. McWherter
38. H. C. Meyer
39. D. R. Miller (AEC, Wash.)
40. J. P. Nichols
41. F. L. Peishel
42. R. A. Schmidt
43. M. J. Skinner
44. J. A. Swartout
45. W. C. Thurber
46. W. E. Unger
47. V. C. A. Vaughen
48. M. E. Whatley
49. O. O. Yarbro
50-69. Lab. Records
70. Lab. Records-RC
71-72. Central Research Library
73. Document Reference Section
74. Research and Development (ORO)
75-89. DTIE