ORNL
MASTER COPY

OAK RIDGE NATIONAL LABORATORY

operated by

UNION CARBIDE CORPORATION

for the

U.S. ATOMIC ENERGY COMMISSION

ORNL-TM-141

COPY NO. - 26

DATE - February 13, 1962

EQUIPMENT AND PROCEDURES FOR STACK GAS MONITORING AT ORNL

J. F. MANNESCHMIDT

ABSTRACT

Routine monitoring of gaseous waste at ORNL was started in 1956, when the installation of manually operated tape monitors was begun at each of three process stacks. In 1959 development of a monitoring system was intensified and a step-moving tape monitor, a charcoal trap monitor, and an ion chamber detector were added to the system. Inventory type samplers were also added at that time for the purpose of estimating stack discharges. In 1961 an experiment, using three sample withdrawal probes with tape monitors, was begun in an effort to establish criteria for a new sample withdrawal system. An in-stack sampler was installed at that time and plans were made for the addition of improved tape monitors and a top-of-stack gamma monitor.

NOTICE

This document contains information of a preliminary nature and was prepared primarily for internal use at the Oak Ridge National Laboratory. It is subject to revision or correction and therefore does not represent a final report. The information is not to be abstracted, reprinted or otherwise given public dissemination without the approval of the ORNL patent branch, Legal and Information Control Department.

EQUIPMENT AND PROCEDURES FOR STACK GAS MONITORING AT ORNL

J. F. Manneschmidt

OAK RIDGE NATIONAL LABORATORY
Operated by
UNION CARBIDE NUCLEAR COMPANY
For the
U.S. ATOMIC ENERGY COMMISSION

Seventh AEC Air Cleaning Conference
October 10-12, 1961
Brookhaven National Laboratory

SUMMARY

The Oak Ridge National Laboratory is engaged in a wide variety of operations related to nuclear research, development and production. Among these are the production of radioisotopes, the operation of nuclear reactors, and other activities which generate gaseous waste containing varying amounts of radioactivity. Routine monitoring of gaseous waste was started in 1956, when the installation of manually operated tape monitors was begun at each of three process stacks. In 1959 the development of a monitoring system was intensified and certain improvements were made to the Principal Stack. These included the addition of a step-moving tape monitor for better particulate detection, a charcoal trap monitor for adsorbable-gas detection, and an ion chamber detector in the off-gas system discharge, which carries the bulk of activity released into the stack. Inventory-type samplers, consisting of a filter and a charcoal cartridge, were placed on all stack samplers for the purpose of estimating stack activity discharges. In 1961 an experiment, using a triple sample withdrawal probe with tape monitors, was initiated at the Principal Stack to establish the criteria for a new sample withdrawal system. A temporary in-stack sampler was installed to replace the less efficient external samplers and design is under way on a permanent installation which may be operated with greater simplicity and safety. An improved tape monitor which will give both beta/gamma and alpha detection, and which has many other advanced features, is planned for future use on the stack and on the ducts. The filter-charcoal cartridges will then be used on the smaller tributaries. A gross-gamma monitor, consisting of scintillation detectors mounted at the top of the stack, is in the concept stage.

EQUIPMENT AND PROCEDURES FOR STACK GAS MONITORING AT ORNL

The Oak Ridge National Laboratory is a vast complex of research development, and production operations. Its research and development groups conduct a wide variety of studies, which include reactor fuel reprocessing, disposal of high level waste, the isolation and purification of transuranic and transplutonic elements, and basic research in many other fields. There are at the Laboratory five reactors, of different types, some operating continuously, and all at different power levels. The production of radioisotopes is a major function of the Laboratory; over one hundred different radioactive preparations are produced, ranging in quantity from millicuries to kilocuries, and requiring, in most cases, chemical purification and processing. All of these varied operations produce quantities of gaseous waste, usually containing some degree of activity, which must be treated for removal of the dangerous contaminants and then discharged to the atmosphere.

There are three stacks at the Laboratory to which are routed all of the gaseous waste and which discharge to the atmosphere. I would like to describe these stacks in order of ascending importance, activity-wise, and describe briefly the operations associated with each (Fig. 1). The Pilot Plant stack discharges ventilation air at the rate of approximately 40,000 cfm from the cells and operating areas used at various times for processing irradiated reactor fuel elements of several types and from the high level analytical laboratory in the same building. The gaseous waste from this area passes through absolute filters but is found to contain I^{131} and traces of the thoron daughters when it is discharged to the atmosphere.

The reactor area stack releases cooling air from the graphite reactor at the rate of approximately 120,000 cfm. Here too, the most

predominant of the measured activities is I^{131}. Large volumes of rare gases are released from the reactor stack also, but these are not sampled or measured. This stream of air is likewise filtered before discharge.

The third stack, which I would like to term the principal Laboratory stack, accomodates the remainder of the Laboratory gaseous waste; it discharges approximately 138,000 cfm of gas and at least 90% of the total measured gaseous activity generated by the Laboratory. Principal contributors of activity to this stack are the radioisotope processing areas, from which come quantities of I^{131}, the Oak Ridge Research Reactor, and the large complex of buildings which houses the research and development groups. There is a variety of equipment employed both at the stack and in the work areas for cleaning up the gaseous discharges; however, I shall not discuss that phase of the system at this time. Although a wide variety of operations is tied into this stack the predominant activity here, as elsewhere, has always been I^{131}. However, during the past year, at least fourteen other nuclides have been identified in trace amounts.

Because monitoring is vital to any radioactive waste disposal system, at the Oak Ridge National Laboratory, much emphasis has been placed on developing and maintaining a reliable monitoring system. Gaseous waste monitoring at the Laboratory serves two important functions. First, it enables supervision to maintain better control over the many activities and operations which generate gaseous activity. At the same time, a sensitive monitoring system will alert the laboratory in the event of a serious discharge into the atmosphere and the necessary steps can be taken to best protect personnel and property from fallout or radiation danger. Secondly, a complete monitoring system will provide

sufficient information on a periodic basis to compute with reasonable accuracy the total amounts of all important nuclides being released to the environment. Being able to state "how much" went up "when" will enable the Laboratory to safeguard its position with respect to existing or future MPC_a values. Inasmuch as the bulk of the discharged activity comes from the Principal Stack, it was decided to make it the pilot stack for the development of our monitoring system. There are monitoring devices on the Graphite Reactor Stack and the Pilot Plant Stack; however, they are similar to those on the Principal Stack and so will not be discussed here in detail.

Routine monitoring of the Laboratory gaseous waste discharges was first started by our Health Physics Division in 1956 when a filter tape monitor was installed on the Graphite Reactor Stack. In 1957 a similar device was put into operation at the Pilot Plant Stack and in 1959 coverage was extended to the Principal Stack. Prior to these dates grab sampling was done but not routinely. This first monitor is a very simple affair (Fig. 2) which consists of a 2-in. filter tape through which is drawn a measured stream of the stack gas. A side window G-M tube is located adjacent to the tape in such a manner as to detect the build-up of activity during the collection period. The tape is changed daily by manually pulling through the collection block and cutting off. The deposited activity is then allowed to decay for 72 hr., after which a gross beta-gamma count and an alpha count are made. There is no nuclide identification and no attempt is made to calculate stack discharge. The buildup of activity, as seen by the G-M tube, serves as a measure of stack behavior. Should the buildup occur at an abnormal rate and exceed preset limits, an alarm is sounded and immediate steps are

taken to determine the full extent of any possible release and to locate and bring under control the source of the activity.

Of interest is the type of sample withdrawal probe used in conjunction with these monitors. This probe (Fig. 3) is a 1 in. stainless steel pipe inserted across the diameter of the stack (at the 50 ft level in the case of the Principal Stack). The sample stream is withdrawn through perforations in the pipe and carried to the monitor at ground level. Inspection shows that a system of this design is grossly inefficient for many types of air-borne activity. Centrifugal losses, plate-out (amplified by the great length of connecting tubing), and losses occasioned by horizontal runs all take their toll, particularly in a system where one would like to make quantitative measurements or where the detection of large particles is of importance. Such factors were not seriously considered at the time of installation, however, and it was not until late 1959, after a rather spectacular ruthenium release, that the entire gaseous waste disposal system was examined critically and the first steps taken to develop a complete, efficient monitoring system.

The Operations Division, of the Laboratory which is responsible for the operation of the gaseous waste system, made, in cooperation with our Health Physics and Instrumentation Divisions, certain immediate improvements. Remote surveillance of the tape monitor, just described, was brought about in such a manner as to give better round-the-clock coverage, and the alarm system was improved. Other monitoring devices were then added in parallel to preclude loss of coverage because of the failure of any one piece of equipment.

The first of these devices was a monitored charcoal trap (Fig. 4). This consists of an aluminum cylinder 14 in. long x 4 in. in diameter filled with about 750 g of 14-mesh charcoal. Into a well through the center of the cylinder is inserted an ion chamber (Router Stokes Co. Type RSG-1). The cylinder is attached to the sample line previously described and a stream of stack gas, approximately 0.5 cfm, is drawn through the charcoal. Adsorbable nuclides are held up here and their activities are detected by the ion chamber, the signal from which is amplified by an electrometer and recorded. This has proven very sensitive and has required little other than occasional maintenance on the pump.

The use of a similar ion chamber detector in the off-gas was the next addition to our continuous monitoring array. Off-gas is the name given to the ventilation service which is connected directly to dissolvers, evaporators, and other process vessels containing radioactive material. The volume of this stream is small (only about 2% of the total); however, its activity is quite high, and special scrubbers and filters are used to decontaminate the off-gas before it reaches the stack. In view of its special hazard a separate detector was inserted directly into the discharge from the off-gas clean-up facility to provide a continuous indication of the activity contributed by this source.

The third improvement to the monitoring system was the acquisition of a moving-tape monitor (Fig. 5). This instrument employs a 1 1/2 in. tape which automatically moves stepwise according to a preset cycle. The gas sample stream passes through the tape during the sampling part of the cycle; and then the accumulated deposit is moved under an end-window G-M tube where the activity is detected and recorded through the

use of a linear count rate meter and strip chart recorder. The detector used here has a 2.0 mg window and is sensitive to betas with energies as low as 50 kev. A microswitch attachment on the tape transport automatically sounds an alarm if the tape breaks or runs out. This monitor was first attached to the common sample line at ground level, but was later placed immediately adjacent to the sample probe for use in an experiment to be described later.

In order to maintain an approximate inventory of the activity discharged from the Principal Stack a filter-charcoal sampler was attached. Figure 6 shows such a sampler. The sample collector consists of a Gelman filter holder containing a 2" membrane type filter (Gelman Green 7) followed by a holder containing a small charcoal cartridge. These cartridges are of plastic, approximately 1 1/2 in. long x 5/8 in. in diameter, and contain about 3 g of 16-mesh charcoal. The pump, commonly used for air sampling at the Laboratory, is a positive-displacement type (Gast, Model 0211) with a rated capacity of 1 cfm. Included in each sampling assembly is a 2 cfm purge-type rotameter. In order to simplify the measuring of sample volumes, totalizing meters are being considered as possible replacements for the rotameters at those stations where the total volume of sample must be known with some accuracy. One meter has been ordered for testing; it is quite small, totalizes to the nearest cu ft, and costs little more than the rotameter it will replace.

The filter-charcoal cartridge combination on the stack sampler is changed daily, is analyzed with a single channel gamma spectrometer, and the filter is alpha counted. The activities thus detected are measured and converted, by applying a sample-flow-rate to stack-discharge-rate

factor, to daily stack discharge. Similar samplers were attached to a number of the larger ventilation ducts discharging into the stack; however, these samplers do not contain the charcoal cartridge but only the filter, which is removed daily, and beta counted but not scanned.

While the samplers attached to the stack give information which we call quantitative, those on the ducts, of which there are five in the immediate vicinity of the stack, indicate only the relative levels of activity carried by the various ducts. In the event one of the continuous monitors shows abnormally high activity in the stack discharge, the filter from each duct is immediately removed and counted; in the majority of cases, the source of the activity release can thereby be quickly isolated.

In recent months development work on the gaseous-waste monitoring system has gained momentum, and I would like to describe some experimental work in progress and tell you of our thoughts for the future. The sample withdrawal system is now under close scrutiny. Much evidence has convinced us that the optimum system for withdrawing a sample of contaminated gas for examination at some point external to the stack is one which has minimum length and no sharp bends, and one through which the sample is withdrawn isokinetically, i.e., at a linear flow rate equal to that of the stream being sampled. In our case there also remained the questions of where to locate the withdrawal probe and whether one probe would be sufficient. At the Principal Stack at ORNL the ducts discharge into the stack 15 ft above ground level, while the ports available for sampling devices are located at the 50 ft level. With a linear flow rate within the stack of only about 500 fpm there has always been some doubt

as to the completeness of mixing of the various duct discharges in the 35 ft between these levels.

An experiment (Fig. 7) with three probes and tape monitors was set up in an effort to resolve these questions of number and location of probes. Three 12-ft probes were fabricated of 1 in. stainless steel tubing, each with its collection end curved downward on a 30 in radius. The tips were beveled to a sharp edge. The probes were inserted in the stack at the 50 ft level; one went to the center, the second about 5 ft from the wall, and the third midway between the other two. A step-moving tape monitor, described earlier, was attached to the end of each probe. The G-M tube detectors in the monitors are connected through transistorized preamps to individual log count rate meters which read out on a single multipoint recorder. There is a pumping and flow-metering system attached to the probes which is not shown here. Every effort was made to create three identical probe-monitor systems and to eliminate every variable except probe tip location. Many mechanical and electronic difficulties have been encountered since this equipment went into operation and no conclusive data have yet been produced.

An injection test is planned for the near future; in one phase a measured quantity of activity will be released into a breeching at the foot of the stack. A second phase will be the injection of particulate matter of several densities and diameters. The response of each of the three monitors will be observed. If reasonably good mixing is occurring in the stack and the probes are withdrawing similar samples, the three curves on the multipoint recorder should follow the same trend. The rates of rise should be the same, the peak heights should be approximately equal, and the return to background of each instrument should

follow the same pattern. The collected deposits will be examined by optical microscope to determine the efficiency and similarity of particle collection.

A fourth sample will be collected during the test in a filter-cartridge assembly located directly in the stack. Such a sampler, consisting of a simple curved-end probe with the collector on the end, has been in use for several months and is producing good data. Due to its inaccessibility and other features which make it difficult to manipulate, the sample is taken only once a week. These shortcomings are being rectified, however, and it is anticipated that in the near future our routine daily inventory samples will come from the in-stack sampler.

A conceptual sketch of a revised type of in-stack sampler is shown in Fig. 8. This design features a large (2 to 3 in) rigid pipe permanently attached to the stack. Within the rigid pipe would run a flexible, bellows-type tube with a rabbit on the end which would contain the charcoal-filter cartridge. Stops within the guide pipe would seal the cartridge when in the sampling position. To change cartridges, the flexible tube would be withdrawn from the guide pipe until the rabbit was in a small lead box immediately outside the stack. The cartridge would then be changed, the assembly pushed back into the sampling position, and the pumping system reconnected. Quick-disconnect fittings would be used to facilitate the latter step.

Eventually we expect to replace the step tape monitor described earlier with a revised model now available at the Laboratory (Fig. 9). In this model 3" tape may be advanced stepwide on cycle, continuously, or on demand. It has one feature of the early model which was manually advanced in that the detector is located at the point of collection and

thus detects activity as it is deposited. Shown here is the side window beta/gamma detector which is placed within the cylindrical shield; however, the instrument may be modified to provide alpha detection. Guard switches signal a tape break or a shortage of tape supply. The new tape monitor will not only be used on the stack sampling system but this type monitor will also replace the filter samplers now located on the ducts in the immediate stack area. These samplers, in turn, will be moved upstream to locations as near as possible to the individual processing and operating areas.

An improved sampler has also been devised which may, at certain locations, eventually replace the two-unit combination described earlier. In sampling the off-gas system, which operates at a negative pressure of 25 in. of H_2O, the two-unit device was found to leak badly. After many modifications and the use of much collodion and pipe dope, a completely new sampler was designed; this is shown in Figures 10 and 11. This sampler uses the conventional 1 1/2 in. charcoal cartridge but only a 1 in. filter, both elements being contained in a single unit. The two halves of the unit are sealed with an O-ring, and the use of a nut for closing prevents any possible damage to the filter due to twisting. Only one of these samplers has been fabricated and it has not yet been tested.

Another device for continuous stack monitoring, still in the design stage, is the gross-gamma or "stack shine" monitor. The rather unique design seen in Figure 12 envisions a group of four scintillation detectors positioned at the top of the stack in such a manner as to be exposed to any radiation from the stack effluent. Care must be taken that the detectors are not within the plume; otherwise, contamination will quickly become a problem. Also, their position must be slightly below the rim of the stack so that the radiation from the highly contaminated inner

wall will not be detected. For maintenance and inspection purposes the detectors may be lowered by a pulley and cable arrangement in a manner similar to the way aircraft warning lights are manipulated. The first model of this device is under test; however, it is at ground level and obviously lacks sensitivity because of the distance involved.

The monitoring of gaseous waste presents a many-sided problem. We at ORNL have approached it in a manner which we hope will produce in a minimum time a system giving maximum security. It is our obligation and responsibility to strive for such security if the Laboratory is to operate in a safe manner and not become a hazard to our environment.

UNCLASSIFIED
ORNL-LR-DWG 62338

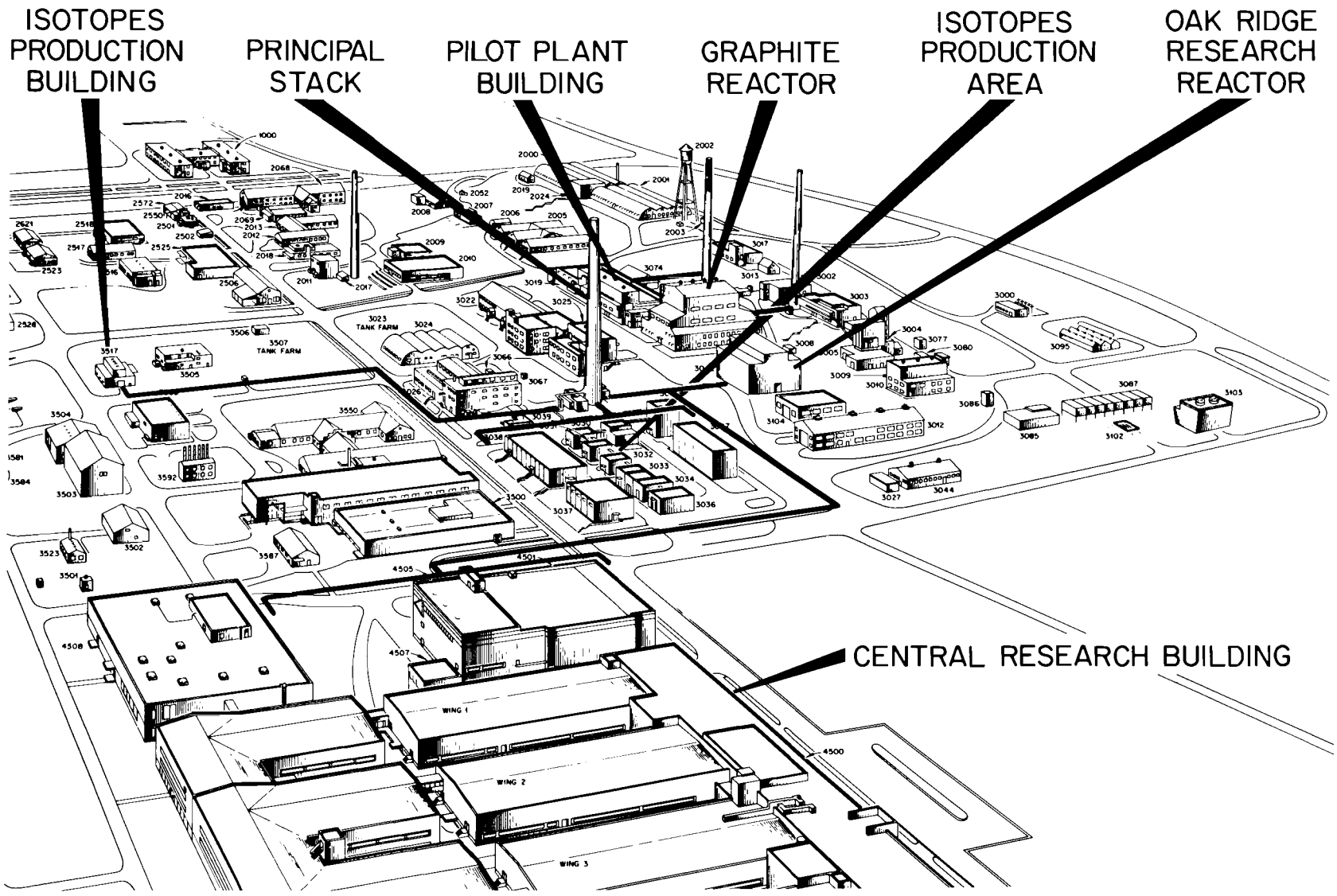

Fig. 1. Location of Process Stacks and Main Contribution to Gaseous Waste System.

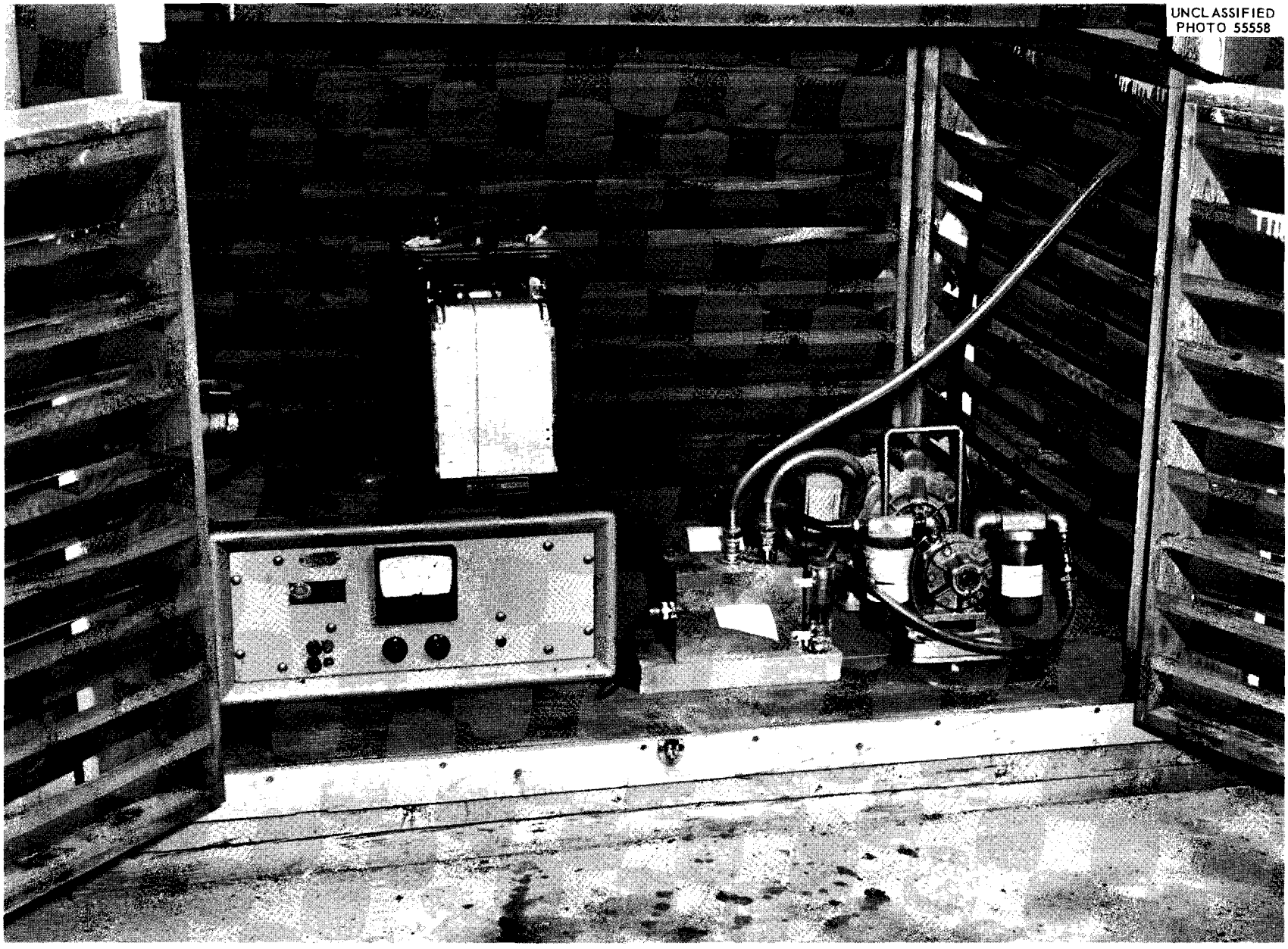

Fig. 2. Health Physics Stack Monitor – Early Model.

UNCLASSIFIED
ORNL-LR-DWG 62359

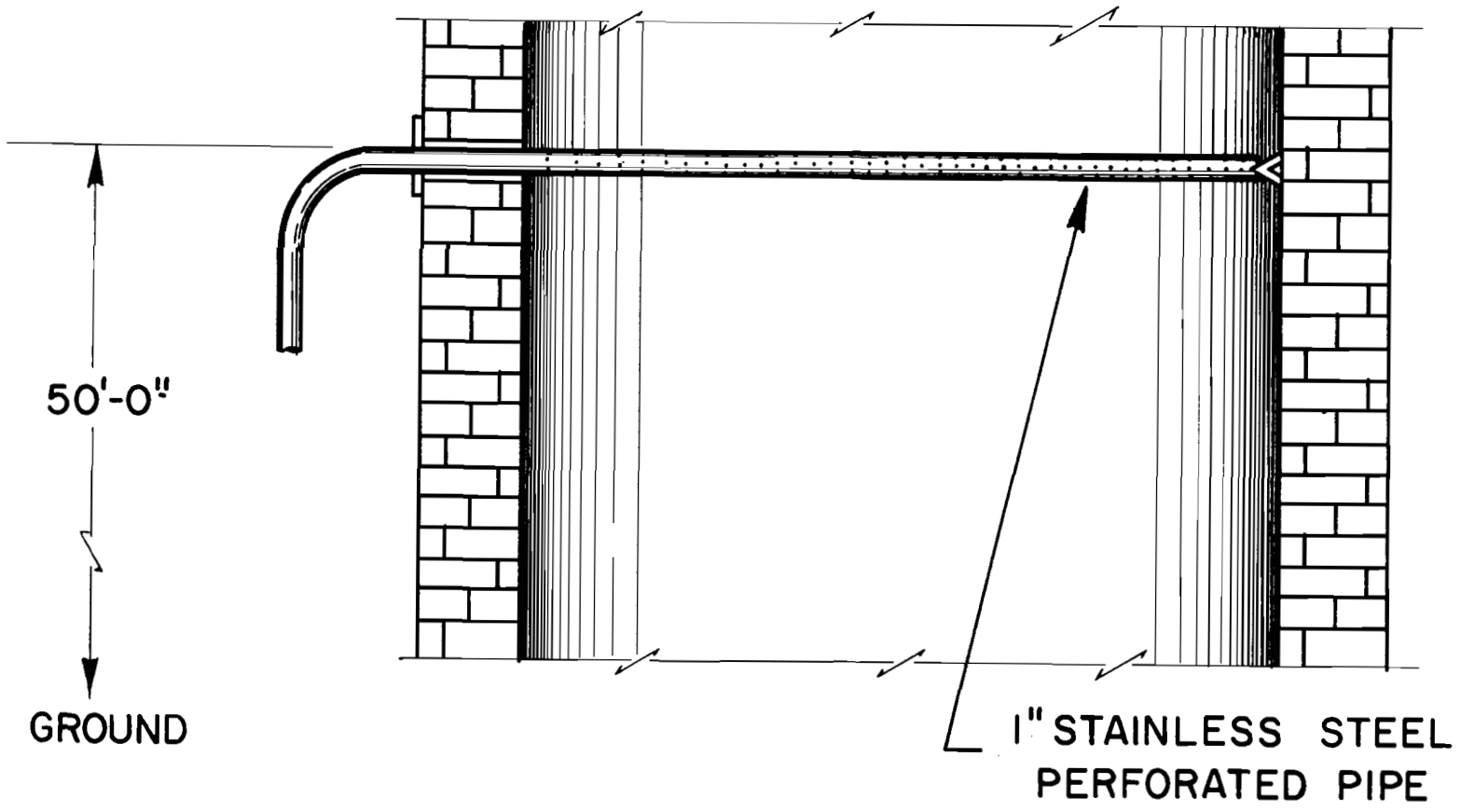

Fig. 3. Traverse-Type Sampler – Principal ORNL Stack.

UNCLASSIFIED
PHOTO 55559

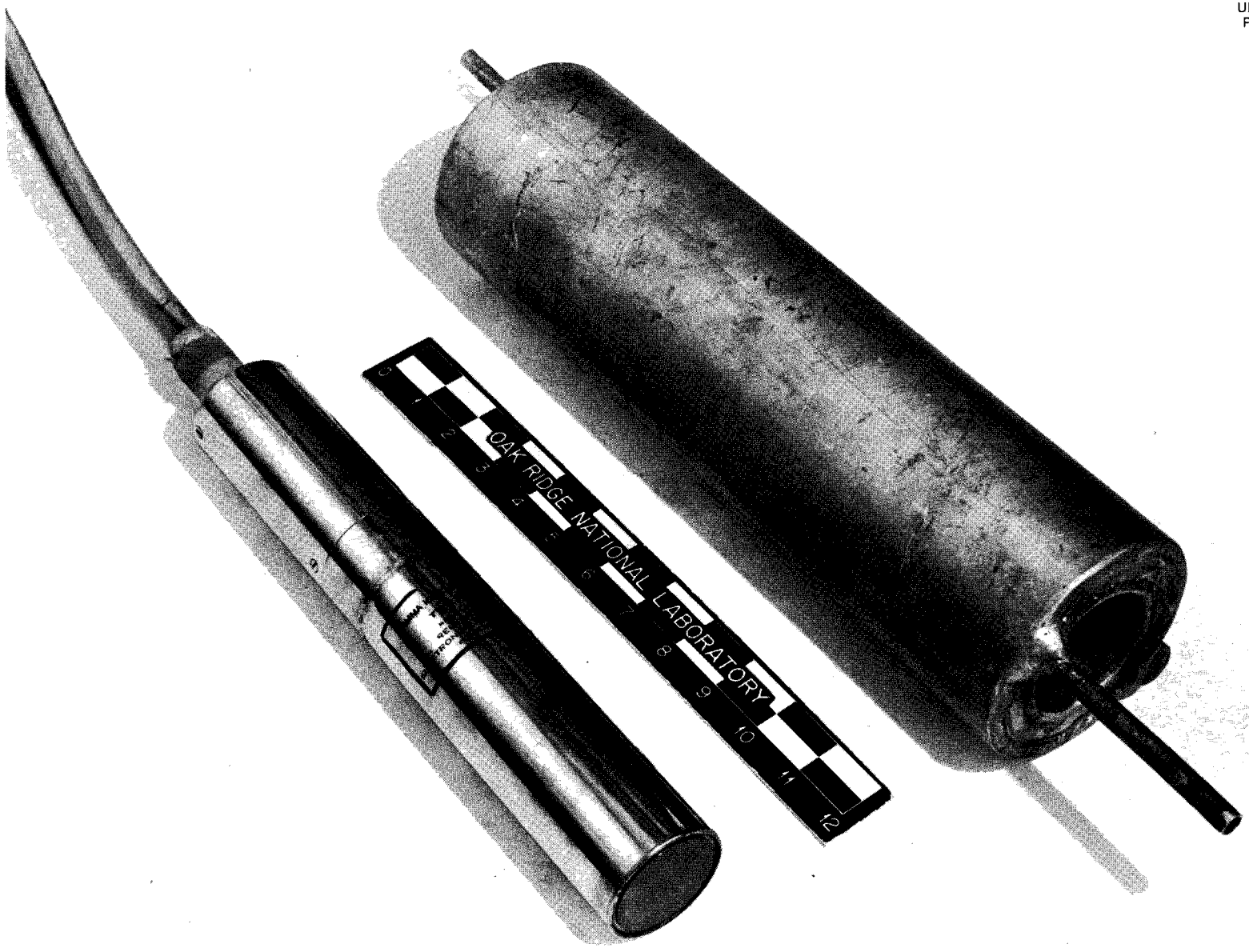

Fig. 4. Charcoal Trap Monitor.

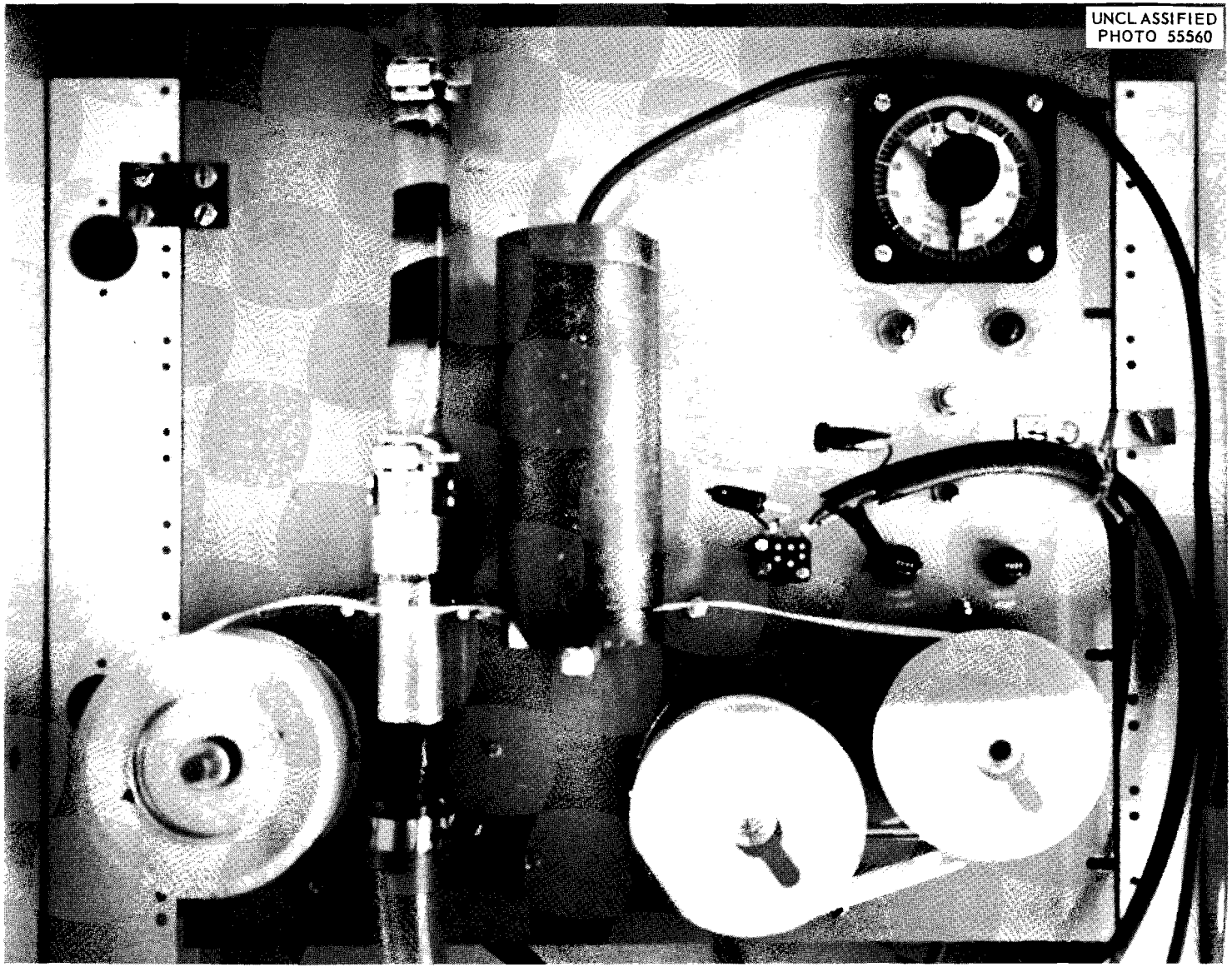

Fig. 5. Step-Moving Tape Monitor.

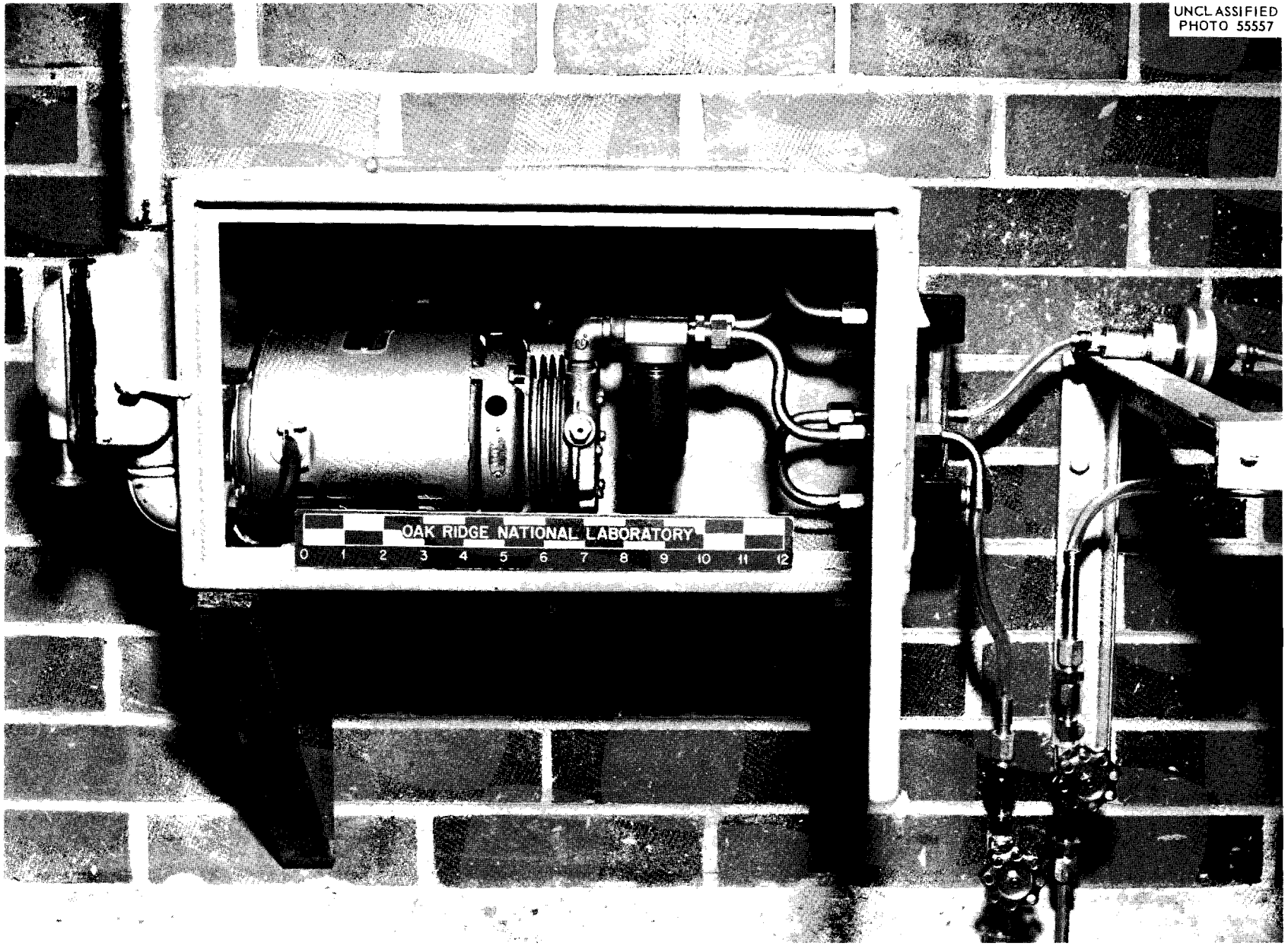

Fig. 6. Typical Inventory Sampler Station.

UNCLASSIFIED
ORNL-LR-DWG 62356

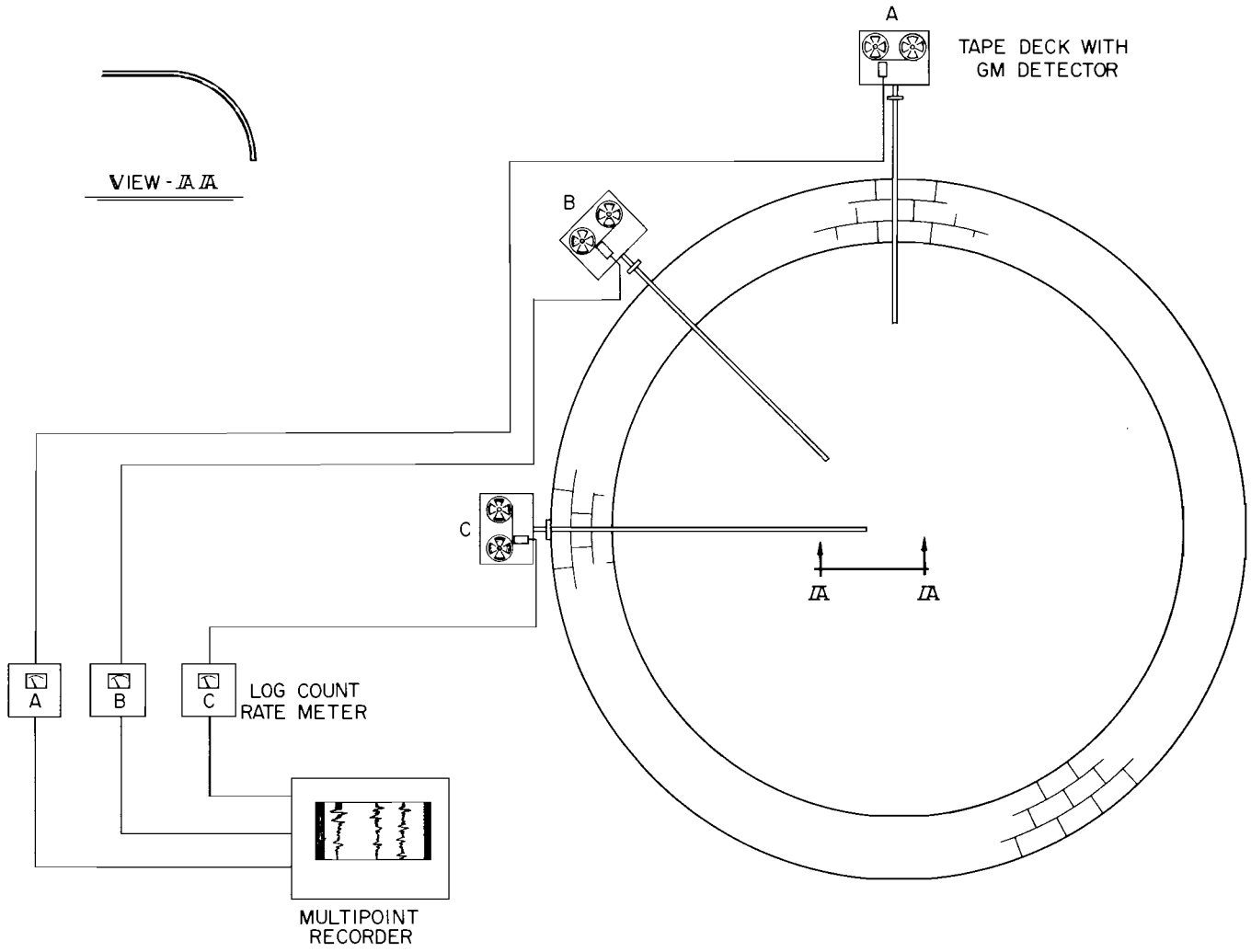

Fig. 7. Tape Monitor Experiment at Principal ORNL Stack.

UNCLASSIFIED
ORNL-LR-DWG 62357

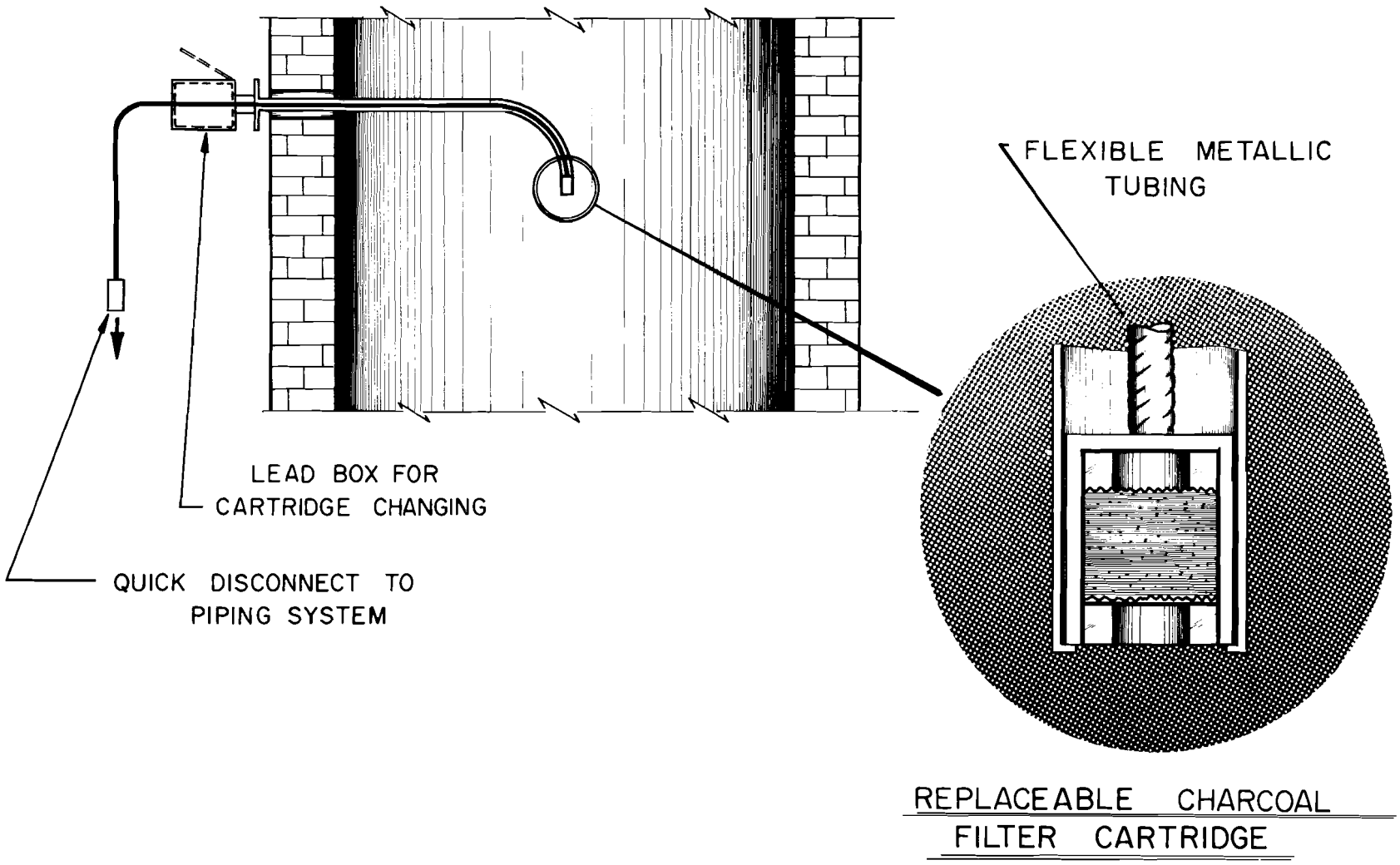

Fig. 8. Conceptual Design of Instack Sampler – Principal ORNL Stack.

UNCLASSIFIED
PHOTO 55556

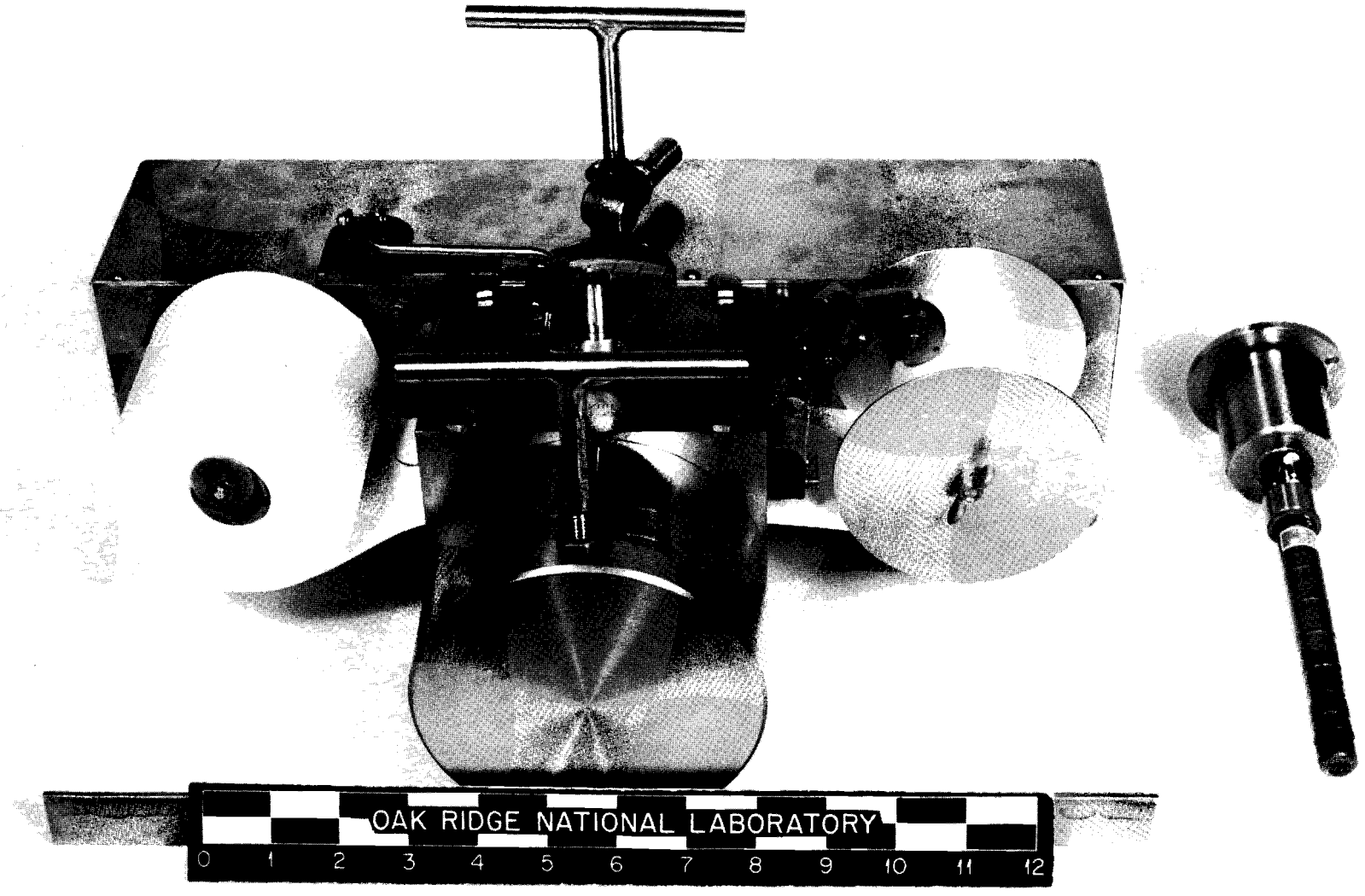

Fig. 9. Tape Monitor – 1961 Model.

UNCLASSIFIED
PHOTO 55555

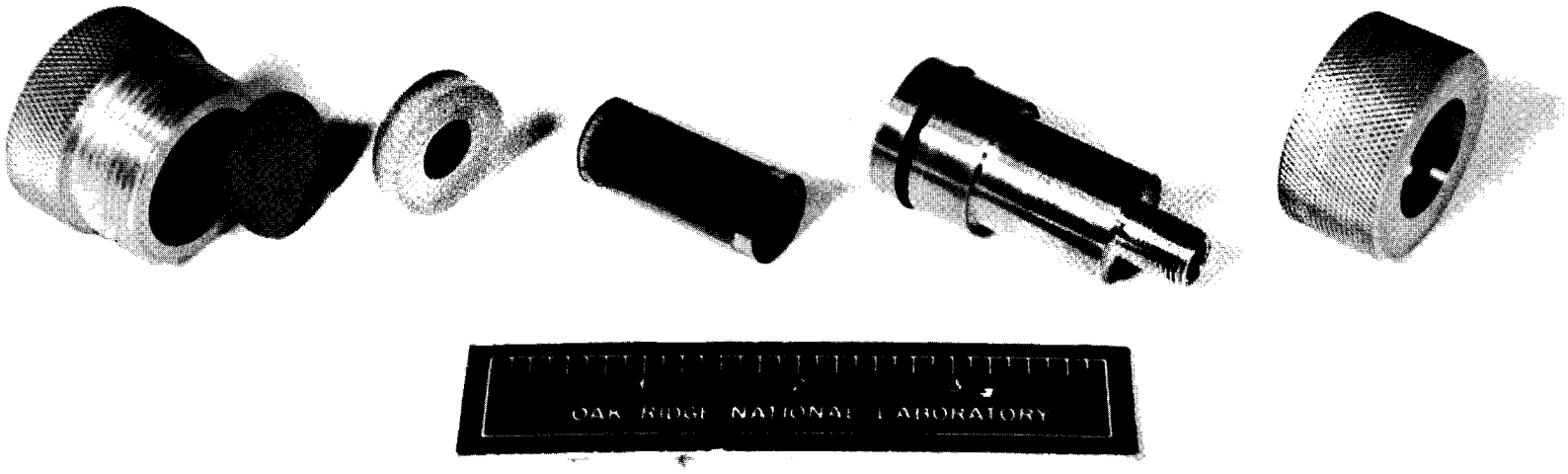

Fig. 10. Single Unit Inventory Sampler – Components.

UNCLASSIFIED
PHOTO 55561

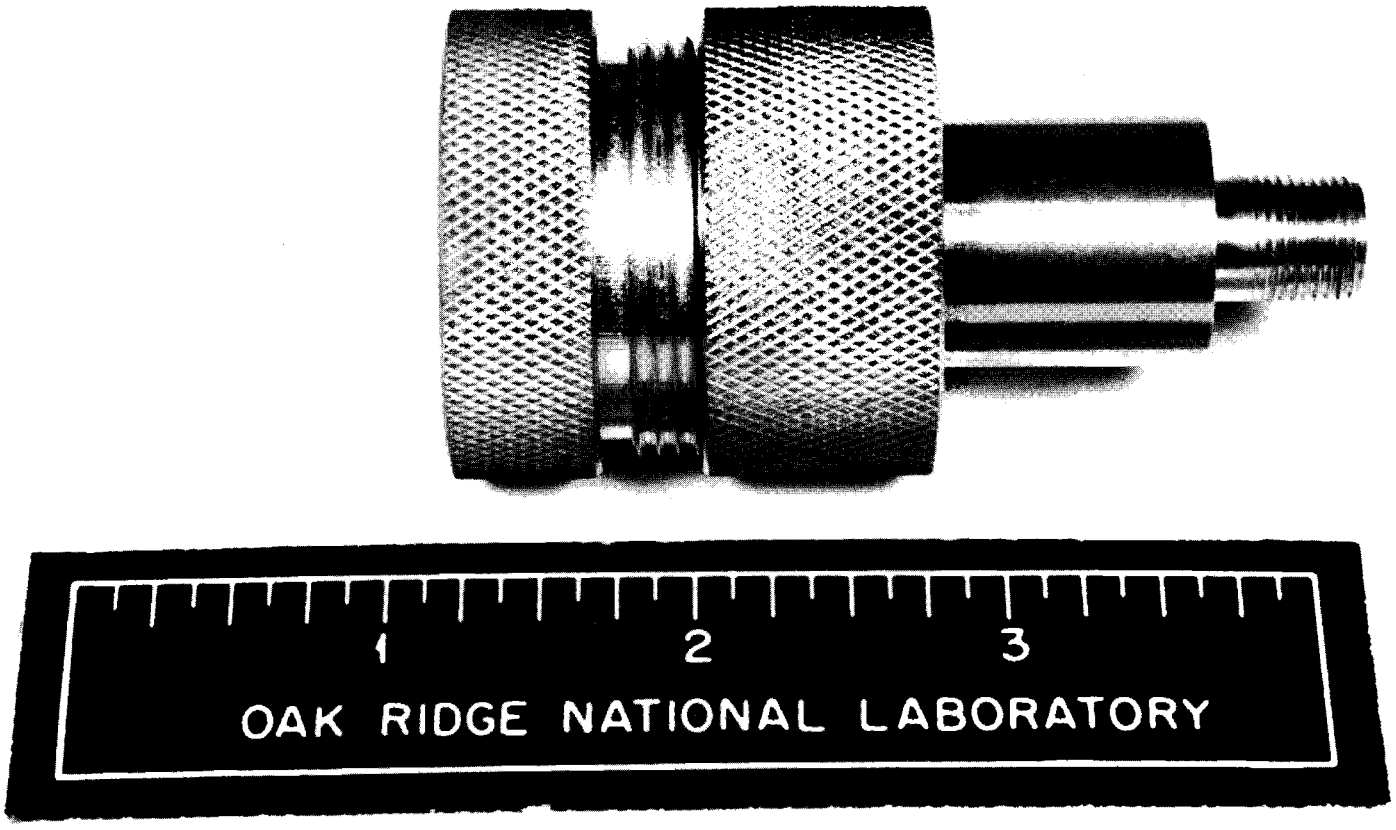

Fig. 11. Single Unit Inventory Sampler – Assembled.

UNCLASSIFIED
ORNL-LR-DWG 62358

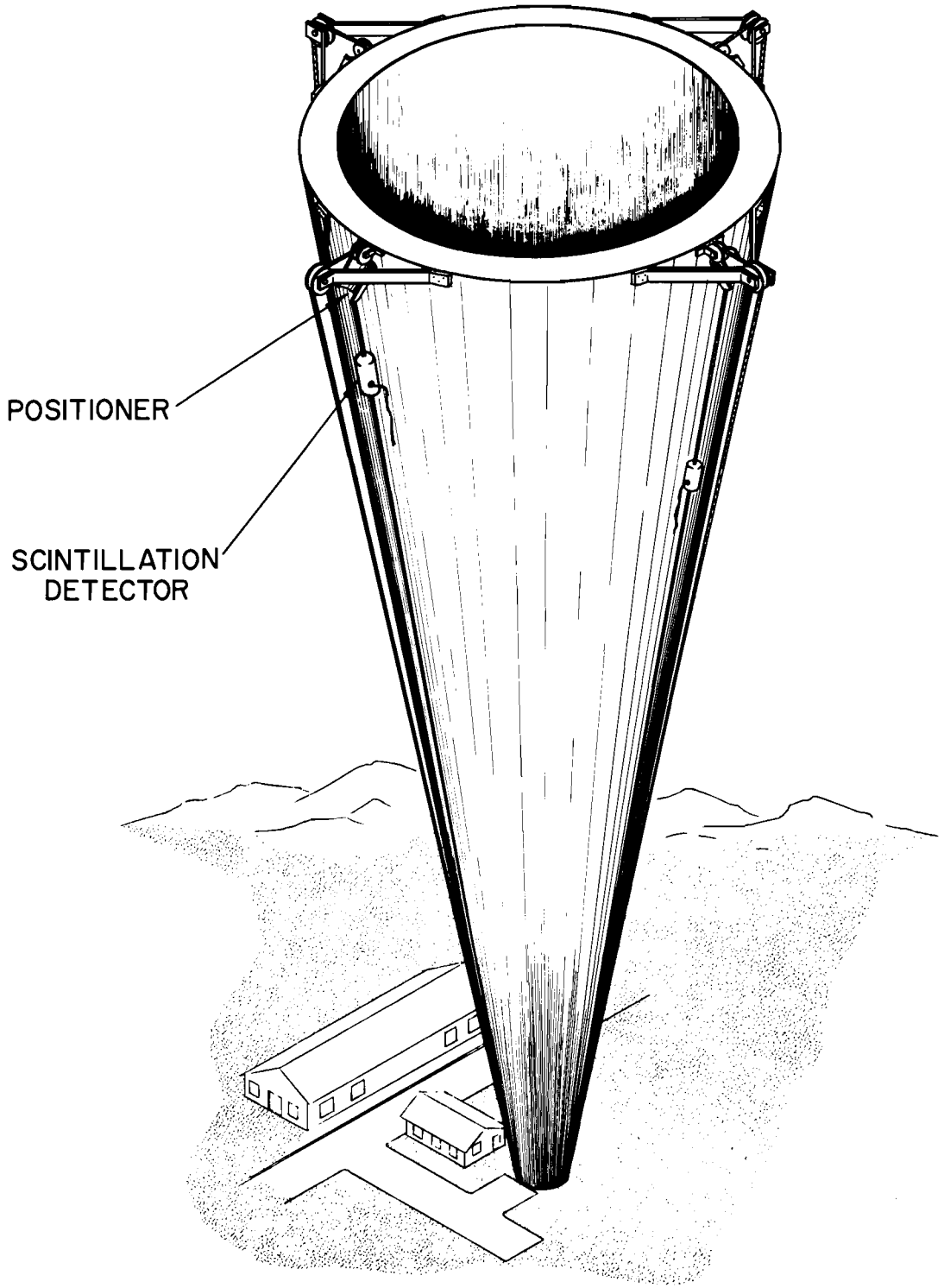

Fig. 12. Conceptual Design of Gross Gamma or "Stack Shine" Monitor – Principal ORNL Stack.

Distribution

1-5. J. F. Manneschmidt
6-20. DTIE, ORO
21-22. Central Research Library
23. Document Reference Section
24-25. Laboratory Records
26. Laboratory Records - RC
27. Division Research and Development, ORO