MARTIN MARIETTA ENERGY SYSTEMS LIBRARIES

3 4456 0286298 0

ORNL-3301
UC-22 – Isotope Separation
TID-4500 (17th ed., Rev.)

PREPARATION OF CHARGE MATERIALS FOR ORNL ELECTROMAGNETIC ISOTOPE SEPARATORS

C. W. Sheridan
H. R. Gwyn
L. D. Love

CENTRAL RESEARCH LIBRARY
DOCUMENT COLLECTION
LIBRARY LOAN COPY
DO NOT TRANSFER TO ANOTHER PERSON
If you wish someone else to see this document, send in name with document and the library will arrange a loan.

OAK RIDGE NATIONAL LABORATORY
operated by
UNION CARBIDE CORPORATION
for the
U.S. ATOMIC ENERGY COMMISSION

Printed in USA. Price $2.00. Available from the

Office of Technical Services
U. S. Department of Commerce
Washington 25, D. C.

LEGAL NOTICE

This report was prepared as an account of Government sponsored work. Neither the United States, nor the Commission, nor any person acting on behalf of the Commission:

A. Makes any warranty or representation, express or implied, with respect to the accuracy, completeness, or usefulness of the information contained in this report, or that the use of any information, apparatus, method, or process disclosed in this report may not infringe privately owned rights; or

B. Assumes any liabilities with respect to the use of, or for damages resulting from the use of any information, apparatus, method, or process disclosed in this report.

As used in the above, "person acting on behalf of the Commission" includes any employee or contractor of the Commission to the extent that such employee or contractor prepares, handles or distributes, or provides access to, any information pursuant to his employment or contract with the Commission.

ORNL-3301

Contract No. W-7405-eng-26

ISOTOPES DIVISION

PREPARATION OF CHARGE MATERIALS FOR ORNL ELECTROMAGNETIC ISOTOPE SEPARATORS

C. W. Sheridan, H. R. Gwinn, and L. O. Love

DATE ISSUED

JUL 19 1962

OAK RIDGE NATIONAL LABORATORY
Oak Ridge, Tennessee
operated by
UNION CARBIDE CORPORATION
for the
U. S. ATOMIC ENERGY COMMISSION

MARTIN MARIETTA ENERGY SYSTEMS LIBRARIES

3 4456 0286298 0

PREPARATION OF CHARGE MATERIALS FOR ORNL ELECTROMAGNETIC ISOTOPE SEPARATORS

C. W. Sheridan H. R. Gwinn L. O. Love

ABSTRACT

Descriptions are given of procedures, techniques, and equipment used to prepare charge materials for electromagnetic isotope separators at ORNL. Data on ion outputs during processing, charge consumption rates, and process efficiencies are given for 54 elements.

The Electromagnetic Isotope Separations Department's charge preparation laboratory is a highly specialized inorganic-chemistry laboratory supplying specific feed materials for use in electromagnetic isotope separators. At present, ORNL's separation program is utilizing 26 beta units and two alpha units for the simultaneous separation of five or more elements. With the exception of the rare gases, all elements having stable isotopes have been separated under this program.

By definition a "charge material" is either a chemical element or a thermally stable compound used in the calutron to produce an even flow of vapor to be ionized in the separation process. A suitable charge material must have a vapor pressure of 10 to 100 μ obtainable within the operating temperature range of calutron ion sources. In addition, the following characteristics are desirable:

Simple structure. – The element is preferred over a compound since its use greatly reduces formation of extraneous ions and sidebands. Simple compounds are chosen over more complex ones for the same reason, simple halide salts being the most widely used.

Chemical purity. – Purity must be sufficiently high to eliminate all substances having similar or higher vapor pressures, particularly with rare earth elements containing isobars which are difficult to separate chemically.

Chemical stability. – Disproportionation to higher or lower halides changes the operating characteristics.

Simple vaporization characteristics. – Sublimation is preferred over melting; polymerization is to be avoided.

Low affinity for water. – Material has neither water of crystallization nor is it hygroscopic. Water increases base pressure experienced in the vacuum chamber and prolongs startup time required.

Highest possible ionization efficiency. – Some materials, all other factors essentially being equal, produce more ions than others.

The ultimate criterion for suitability of a compound is a satisfactory collection rate of separated isotopes for the element in question.

The physical character of the charge is also important. Powdery substances should be avoided since they are ejected from the charge container during initial evacuation of the system. It has been found of practical value to fuse all compounds which will liquefy under high-frequency induction heating. This melting, as well as the subsequent cooling and solidification of the melt, is

performed in an inert atmosphere. In cases where fusion is impractical, density is increased by mold-pressing.

Three broad classifications of chemicals are supplied for use as charge material. (1) A limited number of commercial products which are of sufficient purity that only outgassing at elevated temperature and reduced pressure is needed. (2) Cylinder gases and other commercial products, such as the tetrachloride compounds of silicon, germanium, or titanium, which can be used as received from the vendor. (3) Specific compounds such as oxides, halide salts, alloys, amalgams, and oxy-compounds, which are impractical for commercial use and which must be synthesized in the laboratory.

Regardless of the method of preparation, practically all compounds used as charge material are improved by outgassing prior to usage in the calutron. The material is heated under reduced pressure to a temperature approaching that experienced in the calutron with this particular charge. Equipment used by the ORNL group for such outgassing consists of a Pyrex tube 88 mm in diameter, having one test-tube end and the other end fitted with a tapered joint. The overall length of the tube is 36 cm, and it is two-thirds filled with the material to be outgassed. If the material contains an impurity which will sublime, a condensation tube 60 cm long and comparable in diameter to the above reactor is attached to the reactor tube by means of the tapered joint. This condenser tube is also attached to a cold trap and a vacuum system to reduce the reactor pressure to approximately 100 μ. The reactor and condenser are mounted horizontally, and the reactor end is placed in a tube furnace which supplies the required heat. Appropriate heating sublimes the solid contaminant to the cool end of the tube.

In the event that water of crystallization, occluded water, or excess acid is the contaminant to be removed from the charge material, a cap 15 cm long with a tapered joint is attached to the reactor described above. Joined to the side of this cap and pointing downward is a 20-cm tube connected to a vacuum flask which is connected to the laboratory vacuum system. Upon heating, vapors are boiled from the reactor and transported to the vacuum flask where they condense. A stream of cool air directed against the outside of this flask facilitates complete condensation.

All charge materials, whether liquid or solid, have to be placed in appropriate containers, and adequate records must be maintained. These records show the number, type, and size of the container; the gross, tare, and net weights; and the date the container was loaded. When the charge container is returned from the process group, it is reweighed and the charge consumed is recorded. If the container is to be reused, additional material is added to return the charge to the appropriate level.

A second major phase of the charge-preparation laboratory operation is the recycle and ultimate recovery of valuable un-ionized charge material. Feed materials for the separation of platinum metals, rare-earth elements, germanium, gallium, zirconium, hafnium, rhenium, silver, and all enriched charge materials fall into this category. Appropriate recycle and recovery procedures are discussed under the individual elements.

Recycle is an in-run operation whereby un-ionized charge materials are collected from calutron components and returned to the laboratory, where they are purified, converted to the required compound, and resupplied as charge material for the separation.

Recovery is the eventual collection and purification of all unresolved feed material obtained by washing all calutron components and charge containers used in the separation. In many cases it is practical to ignite all carbon and paper salvage to recover material from the resulting ash.

When final recovery and purification are completed, a homogeneous sample is submitted for spectrographic analysis, and the material is weighed and stored for reuse at a later date. Results from spectrographic analyses allow a comparison of the purity of the recovered feed with that of the starting material and are used as a basis for selecting feed material for subsequent separations.

The fact that calutron performance is highly dependent on the quality of the charge material imposes a grave responsibility on the charge preparation chemist to ensure that the degree of operating efficiency is not limited by inferior feed materials.

Quantities and equipment dimensions expressed in the following descriptions are those which have been chosen to meet the specific needs at ORNL. A change in the scope of the operation might require alteration in equipment size and work loads.

The term "charge bottle" refers to any container used to hold charge material in the calutron. These containers fit into the ion source of the calutron except where reference is made to external placement of the charge. In these cases the charge is placed on the source exterior to the vacuum system, and vapor is fed into the source by means of a tube located within the high voltage insulator. Materials procured as cylinder gases are fed directly into the arc chamber from the cylinder. From an economical standpoint, graphite charge containers are preferred over those fabricated from stainless steel as long as the graphite will contain the charge material at the temperature necessary to produce adequate operating vapor pressure. Table 1 gives a brief description of the containers referred to in this report, together with dimensions and approximate operating temperature.

Table 1. Charge Containers Used

Style	Material	Overall Dimensions (cm)	Temperature Range (°C)
C-13	Graphite	10.9 × 9 × 6.4	Room to 350
C-16	Graphite	10.9 × 9 × 3.9	350 to 1200
C-18	Graphite	13.4 × 9 × 6.4	350 to 1200
S-16	Stainless steel	10.9 × 9 × 3.9	350 to 1200
S-18	Stainless steel	13.4 × 9 × 6.4	350 to 1200
X-5	Stainless steel	14.7 × 9.9 × 5.5	Room to 350
SE	Stainless steel	10.2 × 10.2 (cylinder)	20 to 50
Source block[a]	Graphite	2.3 × 3.1 × 14.3	1800 to 2500

[a]See Fig. 1. Complete discussion covering the use of this source unit is given in: W. A. Bell, Jr., L. O. Love, and C. E. Normand, *A 2800°C Ion Source Unit and Its Use in Separating the Isotopes of Pd, Pt, Ru, and Ir*, ORNL-1767 (July 30, 1954).

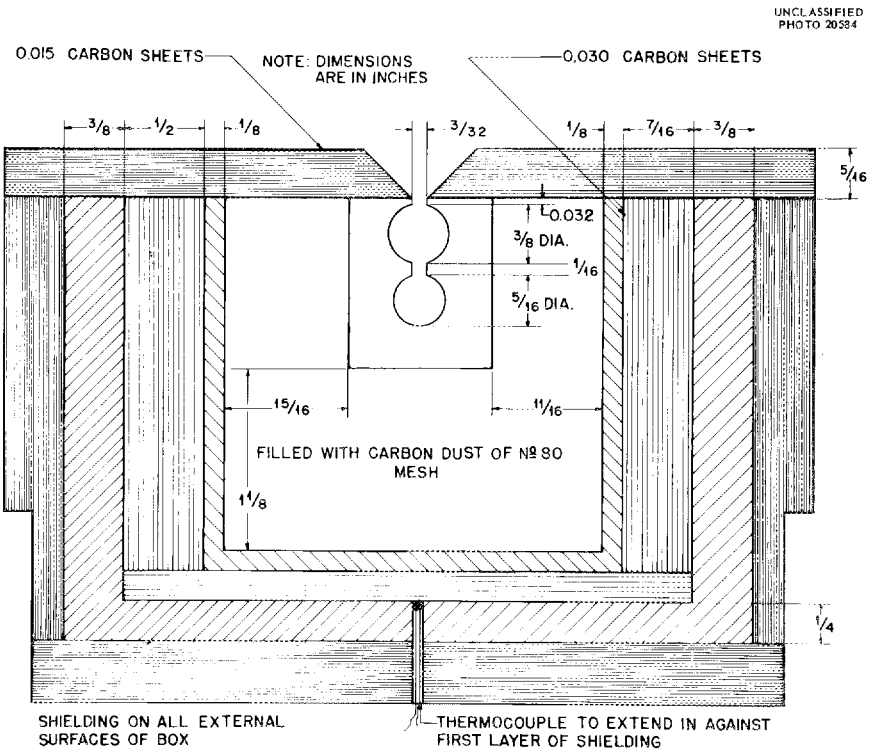

Fig. 1. Details of Source Block and Heat Shielding.

Graphite and copper are used for receiver pockets. At present the only exceptions are the use of a silver collector for the isotopes of mercury and utilization of aluminum receivers for isotopes of tellurium and antimony.

Some elements present special retention problems because of their gaseous form or because their high vapor pressure at a comparatively low temperature makes it possible for them to be revaporized from the receiver. Various materials are used in the receiver pockets to react with the collected ions of these particular elements to form stable compounds or alloys. This procedure secures the separated isotopes in the collector and increases the retention factor. (Copper turnings are used, e.g., to contain sulfur; magnesium chips for chlorine; magnesium, barium, or cadmium chips to contain bromine; silver turnings in a silver collector to hold mercury; aluminum chips in an aluminum collector for tellurium and antimony.)

The operational data listed for the various elements reflect the average for calutron ion sources in use when that particular separation series was completed. Not all elements have been processed with the modified medium- and high-temperature sources recently developed. No attempt is made to express range of deviations from this average, and with certain elements this range is extremely wide. (The average ion output, e.g., as given for one series of runs for calcium is 110 ma/hr. Deviations from this figure range from a minimum average of 13 ma/hr for one calutron run to a maximum average of 200 ma/hr for one run.)

The **ion output** is the singly charged positive ion current measured at the collector. No attempt is made to account for current rejected by the receiver face plate covering the collector

pockets. The **total ion current** is a measure of the ions leaving the source plus the electrons reaching the source.

The **process efficiency** is the ratio of the amount of the element collected (as measured by monitored ion current at the receiver) to the amount of the element consumed. **Consumption rate** is the amount of the element consumed per tank hour. Obviously this approach leaves a host of unanswered questions such as how much the source drain is influenced by tank pressure, percentage of doubly charged particles, amount of feed that is un-ionized or at ionization experiences charge exchange, and many others.

These data are intended as a guide for the selection of feed materials for electromagnetic isotope separations and do not reflect the level of operation which is anticipated in subsequent ORNL collections.

All natural abundance percentages shown are those given in *Key to the Welch Periodic Chart of the Atoms*, 1959 edition, edited by William F. Meggers.

INTERNAL CHLORINATION OF FEED MATERIAL TO FORM CHARGE COMPOUND

Internal chlorination of metal oxides was first used in Scandinavian separators to convert small quantities of oxide into usable separator charges. ORNL has adopted this technique to the conversion of multigram quantities. Separations using internal chlorination of charge material for Mo, Nd, Ta, Hf, Gd, W, Lu, Zr, and La and internal oxidation of Re have been completed and evaluated. Carbon tetrachloride was the chlorinating agent used, and cylinder oxygen was used for oxidation of Re metal.

Figure 2 illustrates the equipment used at ORNL for introducing the chlorinating agent. A stainless steel charge bottle, style SE (4 in. in diam and 4 in. in length), is fastened to the back of the source-unit junction box. This bottle has a capacity of approximately 1400 g of carbon tetrachloride and has two valves attached to the top. The inlet valve allows the bottle to be filled with liquid, and the outlet valve allows the vapor to pass through. The vapor passes through a $\frac{1}{4}$-in. stainless steel tube into a leak valve. A Micarta rod is attached to the leak valve to enable the operator to control the amount of vapor flowing through the valve. Since the system is operated at approximately +35 kv, a grounding strap is fastened to the Micarta rod just inside the tank front door for safety.

Since the system is under a vacuum of approximately 10^{-5} mm Hg, the vapor flows from the valve through a $\frac{3}{8}$-in. stainless steel tube, through a Swagelok fitting attached to the back of the charge bottle, and passes over and/or through the charge material. A baffle which has 104, $\frac{1}{32}$-in. holes drilled through it forms a false bottom in the charge bottle. The vapor flows under the baffle and up through the charge material, chlorinating it as the vapor passes through. The chloride vapor then passes into the chamber where ionization occurs.

Table 2 contains comparative statistical data derived from separations using both conventional chloride feed and chlorides prepared by internal chlorination. Thus far the internal chlorination process has been run on nine elements, but figures pertaining to the operation of only six

UNCLASSIFIED
ORNL-LR-DWG 68098

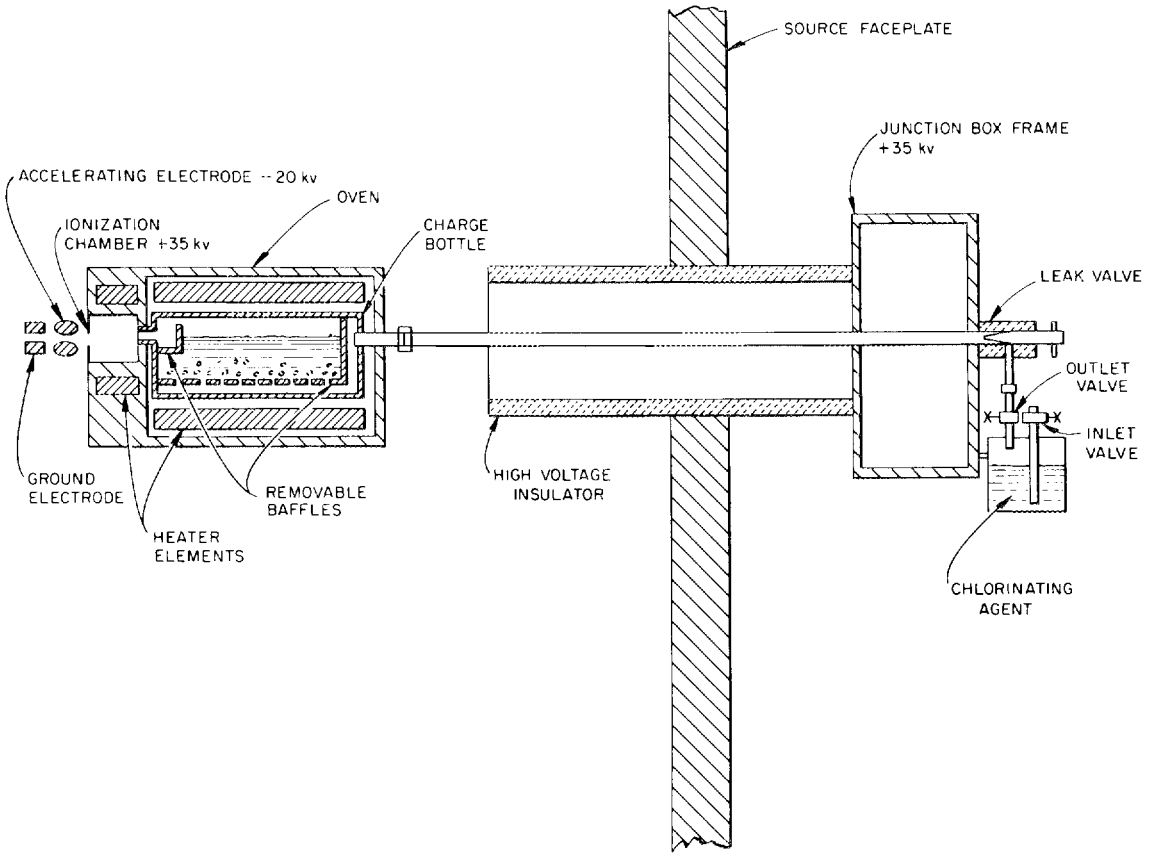

Fig. 2. Schematic of Internal Chlorination Process.

Table 2. Comparison of Internal Chlorination with Conventional Chloride Feed

Charge Material	Charge Consumption Rate (g/hr)	Process Efficiency (%)	Average Ion Output (ma/hr)	Innage (%)	Type Source Unit	Temperature Range (°C)
$GdCl_3$	1.7	3.0	6.5	66.2	M-16	500–600
$Gd_2O_3 + CCl_4$	0.8	5.6	8.1	69.0	M-18	700–800
WCl_6	1.6	4.9	11.2	73.5	M-12	75–140
$WO_3 + CCl_4$	2.3	4.1	12.6	75.3	M-16	550–600
$TaCl_5$	1.3	8.0	15.1	75.2	M-12	50–100
$Ta_2O_5 + CCl_4$	1.4	4.8	9.7	76.5	M-16	600–700
$ZrCl_4$	1.4	4.1	16.5		M-12	100–200
$ZrO_2 + CCl_4$	0.44	12.9	16.7		M-16	575–700
$LaCl_3$	0.81	5.1	7.9	65	M-16	600–700
$La_2O_3 + CCl_4$	0.41	11.6	8.8	83	M-16	700–750
$LuCl_3$	0.55	6.4	5.6	63	M-16	600–700
$Lu_2O_3 + CCl_4$	0.51	12.7	10.1	77	M-16	700–750

elements are given. Statistics regarding the other three elements could not be compared since the prepared chlorides were used in 48-in. radius equipment, while the chlorides resulting from internal chlorination were used in 24-in. radius separators.

Since internal chlorination proved satisfactory, consideration was given to internal oxidation of a powdered metal during a series of calutron runs. Rhenium is normally vaporized from Re_2O_7. When this procedure is used the operating temperature is hard to control and the source absorbs moisture when exposed to air during servicing of the unit. A separation of rhenium was completed with rhenium metal powder which was oxidized internally. Oxygen from an external source was passed over the hot metal in the same manner that carbon tetrachloride was passed through the oxide in the internal chlorination method. Greater stability of operation from a temperature standpoint was realized with this internal oxidation; the process efficiency was increased from 1.2 to 5.2%; the charge consumption rate was decreased from 2.0 to 1.28 g/hr; the average ion output rose from 3.3 to 9.5 ma/hr; and the average innage time increased from 67.5 to 80%. In both methods of rhenium operation the temperature of the charge container was in the range 200–300°C.

In general the internal chlorination technique shows improvement over the use of prepared chlorides. Specific advantages include: less sensitive temperature control, reduction in hygroscopic nature of charge material, and simplification in servicing of ion source units. Partially offsetting these advantages is the fact that operations using this technique require increased tank pressure and produce side-beam bands. However, assays on separated isotopes indicate no decrease in assay value where internal chlorination has been used.

ACKNOWLEDGMENTS

The charge preparation techniques and procedures presented have been developed over a period of years by the combined efforts of the chemistry groups and research and development personnel. Special acknowledgment is made of contributions by W. A. Bell, Research and Development supervisor, W. C. Davis of the Chemistry staff, and C. E. Normand, ORNL Consultant.

ANTIMONY

Natural Abundance		Stable Isobars
Sb^{121}	57.25%	$^{a}Te^{123}$
Sb^{123}	42.75%	

Antimony triiodide, antimony trisulfide, antimony trioxide, and antimony metal have been used as charge material in the separation of antimony isotopes. Both the oxide and metal are satisfactory; however, more stable calutron operations are obtained when using the metal. The usual charge consists of 300 g Sb metal in a style C-16 graphite charge bottle.

Granulated Sb metal can be obtained from commercial sources and is satisfactory as a calutron charge material without further processing.

Antimony and its compounds are acute toxicants. Extreme care should be taken to eliminate the possibility of ingestion or inhalation. The use of a good fume hood or respirator, rubber gloves, and observance of good hygienic practices are recommended when handling antimony and its compounds.

Calutron Operational Parameters

Ion output, 53.2 ma/hr
Total ion current, 130 ma/hr
Process efficiency, 15.7%
Charge consumption rate; 1.54 g Sb metal per beta tank hour

---

[a] Te^{123}, natural abundance 0.87%, is radioactive with a half-life of $> 10^{14}$ years.

Natural Abundance		Stable Isobars
Ba^{130}	0.101%	Te^{130}
Ba^{132}	0.097%	Xe^{130}
Ba^{134}	2.42%	Xe^{132}
Ba^{135}	6.59%	Xe^{134}
Ba^{136}	7.81%	Xe^{136}
Ba^{137}	11.32%	Ce^{136}
Ba^{138}	71.66%	[a]La^{138}
		Ce^{138}

Barium metal, barium chloride, barium bromide, barium nitrate, and barium oxide have been used as charge material in the separation of barium isotopes. Barium metal provides the most satisfactory calutron operating conditions and this is the preferred material. The average charge consists of 250 g Ba metal in a style S-16 stainless steel charge bottle.

An effort is made to procure Ba metal with low strontium content from commercial sources for use in the calutron. The presence of >0.5% strontium in the Ba metal greatly reduces its value as a charge material. Tabulated below are typical calutron operating characteristics using Ba metal charges with different strontium contents.

	Ba Metal (0.2–0.3% Sr)	Ba Metal (3–4% Sr)
Average ion output	23.2 ma/hr	6 ma/hr
Process efficiency	11.2%	0.9%
Charge consumption rate	1.0 g/hr	3.4 g/hr
Innage time	53%	28.9%

Melting the Ba metal and allowing it to flow into the charge bottle under vacuum improves the operation by reducing operating pressure, lowering current drain, and eliminating sparking. It has been found necessary to isolate the Ba vapor from hot graphite source components for optimum operating conditions. In these separations the inside of the ionization chamber is lined with stainless steel, and the graphite exit slit is replaced with one fabricated from stainless steel.

Barium metal reacts with water and alcohol to evolve hydrogen, which can form an explosive mixture in air. Soluble salts of barium are toxic and it is recommended that rubber gloves and safety glasses be worn when handling barium and its compounds. Respirators should be used if dusting occurs.

---

[a]La^{138}, natural abundance 0.08%, is radioactive with a half-life of 1.1×10^{11} years.

BARIUM (continued)

Calutron Operational Parameters

Ion output, 23 ma/hr

Total ion current, 90 ma/hr

Process efficiency, 7.9%

Charge consumption rate, 1.5 g Ba metal per beta tank hour

BERYLLIUM

Natural Abundance	Stable Isobars
Be^9 100%	None

Although beryllium has ~~no~~ one stable isotope~~s~~, an electromagnetic separation to enhance the concentration of Be^{10} was made on material which had been irradiated in a reactor. In this separation Be^{10} (half-life of 2.5×10^6 years) was enriched from an initial concentration of 4.5×10^{-5} to 1.2×10^{-3}%. The charge consisted of 150 g $BeCl_2$ in a style S-16 stainless steel charge bottle.

Two methods have been used to prepare anhydrous $BeCl_2$. Metallic beryllium can be converted to the chloride by heating to 400°C in a stream of dry chlorine gas. The conversion is made in a 10 cm diameter Pyrex tube heated by an electric tube furnace. The tube is flame heated and flushed with chlorine to eliminate air and moisture prior to the introduction of beryllium.

The second method consists of passing a 1:1 mixture of chlorine and carbon monoxide over beryllium carbonate heated to 450°C in the tube reactor described above. The tube is flame heated to remove moisture prior to starting the reaction.

In both methods the beryllium chloride forms in the heated zone, vaporizes, and is deposited in the cold end of the reactor tube. Upon completion of the reaction, the tube is allowed to cool under a flow of chlorine gas. When the tube is cool enough to handle, it is quickly transferred to a dry box where the $BeCl_2$ is removed and stored in sealed containers. Beryllium chloride is very hygroscopic and every precaution must be taken to prevent its contact with moist air at any time.

The health hazards associated with beryllium and its compounds are numerous and severe. It is recommended that a thorough examination and study of the hazards associated with this element and its compounds be made before attempting any activity involving their use.

Calutron Operational Parameters

Ion output, 55 ma/hr
Total ion current, 250 ma/hr
Process efficiency, 19.5%
Charge consumption rate, 0.09 g Be per beta tank hour

BORON

Natural Abundance		Stable Isobars
B^{10}	18.45%	None
B^{11}	81.55%	

The two charge compounds which have been used for the separation of the isotopes of boron are boron trichloride and the calcium fluoride–boron trifluoride complex. The preferred charge material is BCl_3.

Normal BCl_3 is procured from commercial sources as a cylinder gas and used as received. Boron enriched to 96% B^{10} in one case and to 89% B^{11} in another, was available in the form of $CaF_2 \cdot BF_3$ for calutron separations. A charge of 500 g of this complex was used in a style X-5 stainless steel charge bottle.

Since recovery of the unresolved charge material is necessary in separations of enriched boron, a controlled experiment using normal boron in the form of $CaF_2 \cdot BF_3$ was run to determine where within the calutron system and in what form the unresolved material would deposit. This experiment showed that approximately 5% of the unresolved boron charge was trapped in the vacuum pump oil, and that 95% passed into the vacuum exhaust system where it could be absorbed in a 10% sodium hydroxide scrubber system. Such an exhaust scrubber system was used in all separations of enriched boron, and following each series of runs the unresolved boron was recovered from the scrubber solution.

In making this recovery a slight excess of calcium chloride solution is added to the scrubber solution to remove the fluoride ion by the precipitation of calcium fluoride, which is removed by filtration. The basic filtrate is evaporated to dryness, pulverized in a mortar, and transferred to a distillation flask containing methanol. Acetic acid is added to the flask until the mixture is slightly acidic. Heat is applied gently to the flask and methyl borate begins to distill at 65°C. A small flow of dry air is used to sweep the distillate into a flask fitted with a reflux condenser containing 8 *N* hydrochloric acid. The hydrochloric acid solution is heated under reflux conditions to completely hydrolyze the methyl borate. After completing the distillation and hydrolysis, the hydrochloric acid solution containing the boron is cooled, transferred to a beaker, and evaporated to dryness on a steam bath. The resulting boric acid is dissolved in hot water, decolorized with activated charcoal, filtered, and again evaporated to dryness. The purified product is stored as boric acid.

Boron and its compounds are considered toxic. The use of a respirator during dusting or misting operations and the use of safety glasses and rubber gloves are recommended.

Calutron Operational Parameters

Ion output, 32 ma/hr

Total ion current, 400 ma/hr

Process efficiency, 7.19%

Charge consumption, 0.18 g B per beta tank hour

BROMINE

Natural Abundance		Stable Isobars
Br^{79}	50.56%	None
Br^{81}	49.44%	

Strontium bromide is the only charge material which has been used for the separation of the isotopes of bromine. This same compound has also been used in the simultaneous collection of the isotopes of both bromine and strontium. The usual calutron charge consists of 250 g $SrBr_2$ in a style C-16 graphite charge bottle.

Strontium bromide may be obtained from commercial sources; however, it also has been prepared in the laboratory by the action of hydrobromic acid on either strontium hydroxide or strontium carbonate. Using a plastic container, strontium metal is carefully dissolved in water to produce a strontium hydroxide solution to which an excess of hydrobromic acid is added. Or, alternatively, small portions of strontium carbonate are dissolved in hydrobromic acid, with care taken to maintain an excess of the acid. In either case the resulting strontium bromide solution is evaporated to incipient crystallization and poured into a shallow stainless-steel tray where it solidifies. The cake is broken out of the tray and heated under vacuum at 325°C for four hours. After cooling, the hygroscopic $SrBr_2$ is quickly transferred to sealed containers for storage.

Bromides are considered moderately toxic and care should be exercised in handling them. Hydrobromic acid produces severe local irritation to mucous membranes. Fume hoods with good exhaust, rubber gloves and safety glasses are recommended when handling hydrobromic acid.

Calutron Operational Parameters

Ion output, 40 ma/hr
Total ion current, 120 ma/hr
Process efficiency, 5.4%
Charge consumption rate, 2.1 g Br per beta tank hour

CADMIUM

Natural Abundance		Stable Isobars
Cd^{106}	1.22%	Pd^{106}
Cd^{108}	0.88%	Pd^{108}
Cd^{110}	12.39%	Pd^{110}
Cd^{111}	12.75%	In^{113}
Cd^{112}	24.07%	Sn^{112}
[a]Cd^{113}	12.26%	Sn^{114}
Cd^{114}	28.86%	Sn^{116}
Cd^{116}	7.58%	

Cadmium chloride, cadmium bromide, cadmium iodide, and cadmium metal have been used in the separation of cadmium isotopes. Although cadmium chloride was the most satisfactory of the halide charge compounds used in earlier isotope separations, recent experience indicates that higher enrichments are obtained when either cadmium oxide or cadmium metal is used. Little difference in performance is observed between cadmium oxide and cadmium metal; however, mossy Cd metal is the preferred charge material since it is easier to handle. The usual charge consists of 200 g Cd metal in a style C-16 graphite charge bottle.

Both CdO and Cd metal are procured from commercial vendors and used without further processing. Cadmium chloride may be obtained from commercial sources; however, it has also been prepared in the laboratory by the action of chlorine gas on the metal under anhydrous conditions.

Cadmium and its compounds are poisonous and inhalation, ingestion, or skin absorption must be prevented. The use of protective clothing, including rubber gloves, is recommended and good personal hygiene procedures should be followed. Cadmium compounds should be handled in fume hoods with good exhaust ventilation and, if necessary, supplied-air masks should be employed to ensure cadmium-free breathing.

Calutron Operational Parameters

Ion output, 35 ma/hr
Total ion current, 140 ma/hr
Process Efficiency, 13.5%
Charge consumption rate, 1.09 g Cd metal per alpha tank hour

---

[a]Cd^{113} is radioactive with a half-life of $> 10^{15}$ years.

CALCIUM

Natural Abundance		Stable Isobars
Ca^{40}	96.97%	[b]K^{40}
Ca^{42}	0.64%	Ar^{40}
Ca^{43}	0.145%	Ti^{46}
Ca^{44}	2.06%	Ti^{48}
Ca^{46}	0.0033%	
[a]Ca^{48}	0.185%	

Calcium chloride, calcium iodide, and calcium metal have been used as charge material in the separation of calcium isotopes. Calcium metal has been the preferred charge since development of the higher temperature M-16 calutron source unit. A charge consists of 140 g of Ca metal in a style S-16 stainless steel charge bottle.

Calcium metal is procured from commercial sources and used without processing.

Calcium in itself is not toxic; however, contact with water results in the generation of heat and serious burns can result. Hydrogen gas is also produced during this reaction and explosive concentrations can result. Rubber gloves and goggles should be worn when handling calcium and its compounds, and respirators should be worn if dusting is encountered. Open flames should be kept away from calcium at all times, particularly from the site where calcium might be brought into contact with water or hydrous compounds.

Calutron Operational Parameters

Ion output, 110 ma/hr

Total ion current, 370 ma/hr

Process efficiency, 22.9%

Charge consumption rate, 0.73 g Ca metal per beta tank hour

---

[a]Ca^{48} is radioactive with a half-life of 2×10^{16} years.

[b]K^{40}, natural abundance 0.0119%, is radioactive with a half-life of 1.3×10^{9} years.

CARBON

Natural Abundance		Stable Isobars
C^{12}	98.892%	None
C^{13}	1.108%	

Barium carbonate, calcium carbonate, carbon tetrachloride, acetylene, carbon disulfide, potassium cyanide, carbon monoxide, and carbon dioxide have been used as charge material for the separation of carbon isotopes. Carbon monoxide proved to be most satisfactory from an operational standpoint, but due to high toxicity it is not used extensively in isotope separations. Carbon dioxide was the preferred charge compound since ease of handling more than compensated for the slight reduction in calutron performance. Charge consumption rate was not determined.

Carbon dioxide is commercially available as a cylinder gas and is supplied to the calutron from a cylinder located outside the calutron unit.

Carbon dioxide in normal usage is not considered toxic.

Calutron Operational Parameters

Ion output, 50 ma/hr
Total ion current, 280 ma/hr
Process efficiency, not computed
Charge consumption rate, not computed

CERIUM

Natural Abundance		Stable Isobars
Ce^{136}	0.193%	Xe^{136}
Ce^{138}	0.250%	Ba^{136}
Ce^{140}	88.48%	Ba^{138}
Ce^{142}	11.07%	$^{a}La^{138}$
		Nd^{142}

The only compound which has been used in the separation of cerium isotopes is anhydrous cerium trichloride. The average charge consists of 150 g $CeCl_3$ in a style C-16 graphite charge bottle.

Cerium was found to be the only rare earth whose oxide could not be converted to the trichloride by heating with ammonium chloride, as described in detail under samarium. Cerous chloride also appears to be the only rare earth chloride which can be prepared from solution without undergoing hydrolysis and producing a basic salt. Although many cerium compounds, including the nitrate, sulfate, and oxide, can be converted to the chloride, only the conversion of cerous nitrate will be considered here.

Cerous nitrate is dissolved in a minimum of water and filtered. Ammonium carbonate is added to the filtered solution precipitating cerium carbonate. The precipitate is washed with cold water by decantation until the supernatant gives a negative test for nitrate ion. The cerium carbonate is isolated by filtering through paper and then dissolved in hydrochloric acid. Evaporation on a hot plate is continued until the cerium chloride solution reaches a viscid and foamy consistency, at which time heat lamps are used to complete the evaporation to dryness. The resulting cake of $CeCl_3$ is broken into small pieces, placed in an outgassing apparatus, and heated to 400°C at a pressure of approximately 100 μ for three to four hours.

Unresolved cerium charge material is recovered by washing calutron components with a dilute nitric acid solution. Cerium is precipitated from the wash solution with oxalic acid and ignited to cerium oxide. Nitric acid is used to dissolve the oxide, and the resulting solution is treated as above to produce the trichloride.

Cerium and its compounds have a low order of toxicity. Normal care in handling cerium compounds provides adequate personnel protection.

---

[a] La^{138}, natural abundance 0.089%, is radioactive with a half-life of 1.1×10^{11} years.

Calutron Operational Parameters

Ion output, 34 ma/hr

Total ion current, 150 ma/hr

Process efficiency, 7.99%

Charge consumption rate, 2.21 g Ce per beta tank hour

CHLORINE

Natural Abundance		Stable Isobars
Cl^{35}	75.53%	None
Cl^{37}	24.47%	

Nickel chloride, lithium chloride, ferrous chloride, carbon tetrachloride, and chlorine gas have been used as charge material in the separation of chlorine isotopes. The preferred charge depends upon the product desired. Use of LiCl will supply material with the higest isotopic purity; however, if a more rapid collection of a lower assay material is desired, $NiCl_2$ or carbon tetrachloride should be used. The average charge of LiCl consists of 150 g in a style C-16 graphite charge bottle. The usual charge of $NiCl_2$ is 350 g in a style C-18 graphite charge bottle.

Lithium chloride and nickel chloride are not considered toxic; however, both chlorine and carbon tetrachloride are acute toxicants and should be handled with extreme care. The maximum allowable concentration in air is 1 ppm for chlorine and 25 ppm for carbon tetrachloride. Good ventilation should be employed in areas where these materials are handled.

Calutron Operational Parameters

Ion output, 34 ma/hr
Total ion current, 420 ma/hr
Process efficiency, 1.4%
Charge consumption rate, 3.1 g Cl per beta tank hour

CHROMIUM

Natural Abundance		Stable Isobars
Cr^{50}	4.31%	Ti^{50}
Cr^{52}	83.76%	[a]V^{50}
Cr^{53}	9.55%	Fe^{54}
Cr^{54}	2.38%	

Potassium dichromate, chromium sesquioxide, chromium oxychloride, and chromic chloride have been used as charge material in the separation of chromium isotopes. Chromic chloride is the preferred material, and a charge usually consists of 150 g $CrCl_3$ in a style C-16 graphite charge bottle.

A two step procedure is used to prepare $CrCl_3$ in the laboratory. Ammonium dichromate is thermally decomposed to produce low density chromium sesquioxide which is reacted with carbon tetrachloride to produce the charge material.

Ammonium dichromate is dropped into a heated stainless steel beaker with a cover. Only a few grams are used at a time since the decomposition is violent. The resulting sesquioxide, which is of very low density, is placed in a quartz boat and this vessel is inserted into a Vycor reactor tube 10 cm in diameter by 80 cm in length. One end of the reactor is reduced to a diameter of 1.5 cm and connected to the side arm of a 500 ml flask containing carbon tetrachloride. The exhaust end of the reactor is plugged with glass wool to develop a slight back pressure of carbon tetrachloride vapor, thus increasing the efficiency of the chlorination process. The Vycor reactor tube is heated by an electric tube furnace to 725°C and the carbon tetrachloride flask is warmed by an electric mantle. Carbon tetrachloride vapor is conducted through the side arm of the flask into the tube, where it reacts on contact with the hot chromium oxide to form $CrCl_3$. The reaction is terminated after six hours. The unreacted green chromium sesquioxide is localized at each end of the boat and can be separated easily from the purple $CrCl_3$. The bulk density of $CrCl_3$ produced in this manner is low, and it is necessary to press it into a dense cake in order to get the desired amount into the charge bottle.

Metallic chromium is not considered toxic; however, all of its compounds are acute toxicants. Most chromium salts have a corrosive action on the skin and mucous membranes producing deep lesions or ulcers which heal slowly. Ingestion, inhalation, and skin contact must be prevented by the use of a fume hood with good exhaust ventilation, respirators, and rubber gloves.

---

[a]V^{50}, natural abundance 0.25%, is radioactive with a half-life of 4.8×10^{14} years.

CHROMIUM (continued)

Calutron Operational Parameters

Ion output, 35 ma/hr

Total ion current, 110 ma/hr

Process efficiency, 13.9%

Charge consumption rate, 0.44 g Cr per beta tank hour

COPPER

Natural Abundance		Stable Isobars
Cu^{63}	69.1%	None
Cu^{65}	30.9%	

Cupric chloride, cuprous chloride, and cuprous iodide have been used as charge material in the separation of the isotopes of copper. Best operating characteristics were obtained with Cu_2Cl_2, and it is the preferred charge compound. A charge of 500 g of Cu_2Cl_2 in a style X-5 stainless steel charge bottle is generally used in the calutron.

Cuprous chloride is usually obtained from commercial sources as the anhydrous powder, but it has also been prepared in the laboratory by dissolving copper metal in hot hydrochloric acid. After the reaction is complete, the solution is decanted from the remaining metal and evaporated to dryness, yielding Cu_2Cl_2. The salt from either source is fused in a nickel reactor by induction heating before being used in the calutron. Fusion is beneficial in that it provides a dense material free from water and other volatile materials which would prolong pumpdown time in the calutron.

Cuprous iodide is prepared in the laboratory by reacting pellets of copper metal with boiling 47% hydriodic acid. Small portions of elemental iodine are added periodically to the solution, each addition resulting in considerable reaction and darkening of the solution. The solution clears very rapidly at first, but more slowly as the acid becomes saturated with cuprous iodide. The reaction is considered complete when the iodine color persists but disappears upon the addition of a few ml of fresh hydriodic acid. The solution is allowed to boil for an additional 30 min and the supernatant liquid is poured off the copper metal into an excess of cold water. Cuprous iodide settles out of the solution as a fine white powder. (Solubility is 0.0008 g per 100 ml H_2O.) The supernatant is decanted and the precipitate transferred to a fine sintered-glass funnel with a stream of cold water. The salt is allowed to dry, first on the funnel and then in an electric drying oven, and is finally fused in a nickel tube by induction heating.

Copper compounds are not considered toxic; however, the intelligent use of protective clothing, goggles, soap, and water is recommended.

Calutron Operational Parameters

Ion output, 100 ma/hr
Total ion current, 260 ma/hr
Process efficiency, 6.4%
Charge consumption rate, 3.7 g Cu per beta tank hour

DYSPROSIUM

Natural Abundance		Stable Isobars
Dy^{156}	0.0524%	Gd^{156}
Dy^{158}	0.0902%	Gd^{158}
Dy^{160}	2.294%	Gd^{160}
Dy^{161}	18.88%	Er^{162}
Dy^{162}	25.53%	Er^{164}
Dy^{163}	24.97%	
Dy^{164}	28.18%	

The only compound which has been used in the separation of dysprosium isotopes is anhydrous dysprosium trichloride. The average charge consists of 150 g $DyCl_3$ in a style C-16 graphite charge bottle.

The method of charge preparation and the recycle and recovery procedures developed for samarium are used for all rare earth elements with the exception of cerium. The rare earth techniques are described in detail only for samarium and cerium.

Calutron Operational Parameters

Ion output, 16.9 ma/hr
Total ion current, 105 ma/hr
Process efficiency, 5.4%
Charge consumption rate, 1.9 g Dy per beta tank hour

Natural Abundance		Stable Isobars
Er^{162}	0.136%	Dy^{162}
Er^{164}	1.56%	Dy^{164}
Er^{166}	33.41%	Yb^{168}
Er^{167}	22.94%	Yb^{170}
Er^{168}	27.07%	
Er^{170}	14.88%	

The only compound which has been used in the separation of erbium isotopes is anhydrous erbium trichloride. The average charge consists of 150 g $ErCl_3$ in a style C-16 graphite charge bottle.

The method of charge preparation and the recycle and recovery procedures developed for samarium are used for all rare earth elements with the exception of cerium. The rare earth techniques are described in detail only for samarium and cerium.

Calutron Operational Parameters

Ion output, 11 ma/hr
Total ion current, 100 ma/hr
Process efficiency, 7.0%
Charge consumption rate, 1.93 g Er per beta tank hour

EUROPIUM

Natural Abundance		Stable Isobars
Eu^{151}	47.86%	None
Eu^{153}	52.14%	

The only compound which has been used in the separation of europium isotopes is anhydrous europium trichloride. The average charge consists of 150 g $EuCl_3$ in a style C-16 graphite charge bottle.

The method of charge preparation and the recycle and recovery procedures developed for samarium are used for all rare earth elements with the exception of cerium. The rare earth techniques are described in detail only for samarium and cerium.

Calutron Operational Parameters

Ion output, 20 ma/hr
Total ion current, 165 ma/hr
Process efficiency, 6.15%
Charge consumption rate, 1.71 g Eu per beta tank hour

GADOLINIUM

Natural Abundance		Stable Isobars
Gd^{152}	0.20%	Sm^{152}
Gd^{154}	2.15%	Sm^{154}
Gd^{155}	14.73%	Dy^{156}
Gd^{156}	20.47%	Dy^{158}
Gd^{157}	15.68%	Dy^{160}
Gd^{158}	24.87%	
Gd^{160}	21.90%	

The only compound which has been used in the separation of gadolinium isotopes is anhydrous gadolinium trichloride.[a] The average charge consists of 150 g $GdCl_3$ in a style C-16 graphite charge bottle.

The method of charge preparation and the recycle and recovery procedures developed for samarium are used for all rare earth elements with the exception of cerium. The rare earth techniques are described in detail only for samarium and cerium.

Calutron Operational Parameters

Ion output, 8.3 ma/hr
Total ion current, 100 ma/hr
Process efficiency, 11.1%
Charge consumption rate, 0.41 g Gd per alpha tank hour

---

[a] See page 5, Internal Chlorination.

GALLIUM

Natural Abundance		Stable Isobars
Ga^{69}	60.5%	None
Ga^{71}	39.5%	

Gallium oxide, gallium chloride, and gallium iodide have been used as charge material for separation of gallium isotopes. Gallium iodide is the preferred charge since it provides adequate vapor pressure within the normal temperature range of the calutron source units. The average charge consists of 150 g GaI_3 in a style S-16 stainless steel charge bottle.

Gallium iodide can now be obtained from commercial vendors, but several years ago gallium chloride was the only halide salt available commercially, and it was necessary to convert it to the iodide. Gallium chloride was dissolved in water, and gallium hydroxide was precipitated with ammonium hydroxide at pH 7.0. Washing removed the chloride ion, and the hydroxide was dissolved in hydriodic acid. The GaI_3 solution was evaporated to incipient crystallization, transferred in an evaporating dish to a vacuum desiccator, allowed to cool under reduced pressure, and then transferred to an outgassing apparatus. At a temperature of 250°C and a pressure of 40 μ, GaI_3 sublimed from the heated zone and collected in the cool zone of the reactor tube. The sublimed anhydrous GaI_3 was stored in sealed containers until used as charge material.

Due to its high cost, the unresolved gallium charge material is recovered from calutron components. Source, receiver, and liner parts are washed first with water to dissolve GaI_3, and then in nitric acid to dissolve the metal, oxide, and other forms not soluble in water. Since the two wash solutions differ considerably in content of gallium and contaminants they are processed separately.

The water wash solution, which contains considerable iron but very little copper, is acidified with nitric acid and filtered to remove any solid material. The filtered solution is evaporated to approximately one-fourth its original volume and the pH adjusted to 11.0 with sodium hydroxide. At this pH, iron hydroxide precipitates and gallium remains in solution as the soluble sodium gallate. The precipitate is washed several times with dilute sodium hydroxide solution by decantation, filtered, and then discarded. The combined filtrates and washing are adjusted to pH 4.5 with hydrochloric acid, and gallium is precipitated as the hydroxide. After filtering, the gallium hydroxide is ready for conversion to the iodide as described above.

The nitric acid wash solution is filtered to remove solids, and these are combined with solids from the water wash solution. The filtrate, which contains a small quantity of iron and a larger amount of copper, is adjusted to pH 11.0 with sodium hydroxide which precipitates the iron and copper as hydroxides. Washing the precipitate with dilute sodium hydroxide, filtering, and precipitating gallium hydroxide is carried out as described above.

The combined solids from both wash solutions are ignited and fused in a mixture of 60% potassium pyrosulfate and 40% potassium bisulfate. After cooling, the fused mass is digested in hot water and filtered. The solids are washed with dilute sodium hydroxide and discarded. Filtrates and washings are combined and treated as above to recover gallium hydroxide.

Upon completion of the gallium isotope separation series, gallium is converted to the metal for storage. The gallium hydroxide is dissolved in sodium hydroxide, and the solution is electrolyzed at 5 v and 2 amp. A platinum anode and a carbon rod cathode is used. Gallium metal plates out on the carbon electrode as long as the temperature of the electrolyte remains below 29.75°C, which is the melting point of gallium. When the temperature exceeds the melting point, however, the metal drips off the cathode and tends to dissolve in the sodium gallate solution. To prevent this a small plastic funnel is fitted snugly over the bottom of the cathode to catch the liquid gallium and keep it cathodic.

Gallium and its compounds have a low order of toxicity.

Calutron Operational Parameters

Ion output, 29 ma/hr
Total ion current, 140 ma/hr
Process efficiency, 16.2%
Charge consumption rate, 0.47 g Ga per beta tank hour

GERMANIUM

Natural Abundance		Stable Isobars
Ge^{70}	20.55%	Zn^{70}
Ge^{72}	27.37%	Se^{74}
Ge^{73}	7.67%	Se^{76}
Ge^{74}	36.74%	
Ge^{76}	7.67%	

The only charge material which has been used in the separation of germanium isotopes is liquid germanium tetrachloride. Germanium tetrachloride of sufficient purity for use as charge material is obtained from commercial sources and supplied to the source from a style SE stainless steel container located outside the calutron vacuum chamber. The usual charge consists of 400 g $GeCl_4$.

Unresolved germanium charge material is recovered on completion of the separation series. Source, receiver, and liner components are washed with dilute sulfuric acid, and the wash solution is filtered to remove any solids. These solids are digested in 50% sulfuric acid. After filtering, the solids are treated with 14 *N* ammonium hydroxide and 30% hydrogen peroxide. Following this treatment, the solids are filtered and discarded. The combined filtrates and washings are made basic with ammonium hydroxide and saturated with hydrogen sulfide. After filtering and washing the precipitate, which represents unwanted impurities, it is discarded. A sufficient amount of 1:1 sulfuric acid is added to the filtrate to make it 6 *N* sulfuric acid. As the solution is acidified, white germanium disulfide precipitates. Additional hydrogen sulfide is passed through the solution to ensure complete precipitation, the solution is filtered through a Buchner funnel, and the precipitate is washed and damp dried. The germanium disulfide is then dissolved in concentrated ammonium hydroxide, and germanium dioxide is precipitated by the addition of hydrogen peroxide. Since this precipitation is not always complete, it is necessary to check the filtrate for germanium by the use of tannin. Ten grams of ammonium sulfate is added to 200 ml of the filtrate and the mixture boiled. To this is added 25 ml of a freshly prepared 5% tannin solution. After digesting for approximately 1 hr, any precipitated germanium is filtered, washed, dried, and carefully ignited to the oxide at 750°C.

Germanium and its compounds, with the exception of germane, are not considered toxic.

Calutron Operational Parameters

Ion output, 55 ma/hr
Total ion current, 310 ma/hr
Process efficiency, 21.3%
Charge consumption rate, 0.70 g Ge per beta tank hour

HAFNIUM

Natural Abundance		Stable Isobars
Hf^{174}	0.163%	Yb^{174}
Hf^{176}	5.21%	Yb^{176}
Hf^{177}	18.56%	[a]Lu^{176}
Hf^{178}	27.10%	[b]Ta^{180}
Hf^{179}	13.75%	[c]W^{180}
Hf^{180}	35.22%	

The only charge material which has been used in the separation of hafnium isotopes is anhydrous hafnium tetrachloride.[d] The average charge consists of 350 g $HfCl_4$ in a style X-5 stainless steel charge bottle and is prepared by passing a mixture of chlorine gas and carbon tetrachloride vapor over hafnium oxide which is heated to a temperature of 500–550°C.

Relatively pure hafnium oxide is obtained from the Y-12 Plant as a by-product from the production of pure zirconium oxide. The major impurities found in this product are approximately 1% Zr and 0.2% Ti. Hafnium oxide in a Vycor boat is placed in a Pyrex tube 10 cm in diameter by 2 m in length. The inlet end of the tube is reduced to 1 cm and connected to a 500 ml flask which is connected to a cylinder of chlorine gas. The flask is heated with an electric heating mantle and fitted with a separatory funnel which permits a drop-by-drop feed of carbon tetrachloride. An electric tube furnace placed near the inlet end serves to heat approximately one-third of the Pyrex tube. The apparatus is placed near a fume hood in such a manner that the exhaust end of the Pyrex tube projects well into the hood for removal of gaseous reaction products as well as unreacted chlorine and carbon tetrachloride. During operation the carbon tetrachloride is dropped slowly into the heated flask where it vaporizes and, along with chlorine gas from the cylinder, is swept over the heated hafnium oxide. As soon as $HfCl_4$ is formed it sublimes from the hot end of the tube and is collected in the cool zone as a light fluffy powder. Periodically the $HfCl_4$ is removed from the tube and quickly transferred to sealed containers for storage.

The efficiency of the reaction is improved by stirring the hafnium oxide every hour or so to expose a fresh surface. Loosely plugging the exhaust end of the reaction tube with glass wool serves to exclude atmospheric moisture from the tube and prevents hydrolyzation of the $HfCl_4$. When the reaction is complete, nitrogen is used to sweep the tube free of any unreacted chlorine. Approximately 700 g of $HfCl_4$ per day can be prepared by this method.

---

[a]Lu^{176}, natural abundance 2.6%, is radioactive with a half-life of 4.6×10^{10} years.

[b]Ta^{180}, natural abundance 0.012%, is radioactive with a half-life of $> 10^7$ years.

[c]W^{180}, natural abundance 0.135%, is radioactive with a half-life of 3×10^{14} years.

[d]See p 5, Internal Chlorination.

HAFNIUM (continued)

Due to the relative scarcity of high purity hafnium, the unresolved charge material is recycled and recovered. The recovery of hafnium consists of washing the calutron components in nitric acid, precipitating hafnium hydroxide with ammonia, removing copper by electrolysis from the nitric acid solution, reprecipitating hafnium hydroxide with ammonia, precipitating impurities from hydrochloric acid with hydrogen sulfide, extracting iron with diethyl ether, and finally precipitating with ammonium hydroxide. The purified hafnium hydroxide is converted to hafnium oxide by slowly heating to 800°C.

Elemental hafnium has a low order of toxicity; however, the finely divided metal forms an explosive mixture in air. Hydrolysis of $HfCl_4$ to form hydrogen chloride and hafnium oxychloride presents a toxicity hazard. An additional hazard is phosgene, which is produced by the chlorination reaction. Safe handling of $HfCl_4$ requires the intelligent use of rubber gloves, safety glasses, and a fume hood with good exhaust ventilation.

Calutron Operational Parameters

Ion output, 9.1 ma/hr
Total ion current, 200 ma/hr
Process efficiency, 7.9%
Charge consumption rate, 0.8 g Hf per alpha tank hour

INDIUM

Natural Abundance		Stable Isobars
In^{113}	4.33%	$^{b}Cd^{113}$
$^{a}In^{115}$	95.67%	

Indium metal, indium trichloride, indium tribromide, and indium triiodide were used as charge material in the early separations of indium isotopes. The triiodide proved superior in these separations, but still had three undesirable features: it was very deliquescent, it produced very strong bands of I^{+} ions during operations, and its preparation required a large amount of relatively expensive iodine. In an effort to minimize these features, InI was synthesized for use as a feed material. Use of InI resulted in a 50% increase in indium ion output, a reduction in the time required to attain operating pressure, and a net saving in charge material cost. The usual charge consists of 400 g InI in a style X-5 stainless steel charge bottle.

In the synthesis of InI, indium metal is placed in a flask and heated over a flame until melted (mp, 155°C). Iodine is then added, a small amount at a time, with frequent shaking of the flask, until no more brown fumes emanate after an addition of iodine. (This point is reached when the layer of molten InI covering the molten indium prevents iodine crystals coming in contact with the indium.) Instead of reacting, the iodine is volatilized and passes out of the flask as a purple vapor. At this point the liquid InI is decanted into a stainless steel tray where it quickly solidifies. Since InI is somewhat hygroscopic, the resulting cake is broken out of the tray immediately and bottled. This compound can be produced at the rate of 1 kg/hr by adding iodine or indium as needed in a continuing operation.

Indium and its compounds are considered toxic. A fume hood with good exhaust ventilation, rubber gloves, safety glasses, and respirators, if dusting occurs, should be used when handling indium and its compounds.

Calutron Operational Parameters

Ion output, 27 ma/hr
Total ion current, 60 ma/hr
Process efficiency, 14%
Charge consumption rate, 0.81 g In per beta tank hour

---

[a] In^{115}, is radioactive with a half-life of 6×10^{14} years.

[b] Cd^{113}, natural abundance 12.26%, is radioactive with a half-life of $> 10^{15}$ years.

IRIDIUM

Natural Abundance		Stable Isobars
Ir^{191}	38.5%	None
Ir^{193}	61.5%	

Powdered iridium metal is the only charge material which has been used for the separation of iridium isotopes. The metal is used in a special graphite source block which is heated by electron bombardment (Fig. 1, p 4).

Due to its high cost, unresolved Ir is recycled and recovered. Iridium remains in the calutron source as small globules of metal which are readily recovered and reused as feed material. Washing the calutron components and sanding the carbon parts serves to recover Ir which is in the elemental form. Filtering the wash solutions concentrates Ir, and the filtrates are discarded. The solids are dried and combined with the ash resulting when all carbon salvage is ignited in oxygen at 650°C.

The combined solids are leached successively with 1:1 hydrochloric acid and 1:1 nitric acid, then washed with water. The filtrates and washings are discarded; the solids are dried and fused with sodium chloride at 850°C in a stream of chlorine using 10 parts sodium chloride for each part of solid used. The resulting product, sodium chloroiridate, is dissolved in 0.1 *N* hydrochloric acid and filtered. Any remaining solids are re-fused with sodium chloride until no more Ir is recovered. The 0.1 *N* hydrochloric acid filtrate is treated with powdered zinc metal, reducing Ir to the metal. Acidity is maintained in the solution using dilute hydrochloric acid. Reduced Ir metal is recovered by filtering, leaching with 2:1 nitric acid followed by leaching with 2:1 aqua regia, and washing several times with water. The recovered Ir is dried and stored as the metal.

Soluble iridium compounds are considered toxic; however, no industrial data are available upon which to base a maximum allowable concentration in air. Safety clothing plus a respirator should be used when dusting, misting, or vaporizing of iridium or its compounds may be encountered.

Calutron Operational Parameters

Ion output, 0.6 ma/hr
Total ion current, 260 ma/hr
Process efficiency, 1.24%
Charge consumption rate, 0.33 g Ir metal per beta tank hour

Natural Abundance		Stable Isobars
Fe^{54}	5.84%	Cr^{54}
Fe^{56}	91.68%	Ni^{58}
Fe^{57}	2.17%	
Fe^{58}	0.31%	

Ferrous chloride is the only charge material which has been used in the separation of iron isotopes. The usual charge consists of 600 g $FeCl_2$ in a style C-18 graphite charge bottle.

Hydrated $FeCl_2$ obtained from commercial sources is desiccated by heating under vacuum and fusing before being used in the calutron. In order to prepare $FeCl_2$ in the laboratory, 100 g of iron filings are dissolved in 600 ml of 1:1 hydrochloric acid contained in a 3000 ml beaker. Usually twelve batches are prepared and the reaction is allowed to proceed overnight. The combined solutions are filtered and evaporated to incipient crystallization. Green crystals of ferrous chloride tetrahydrate are removed by filtering and are then heated to 450°C at a pressure of 50–75 μ to remove the water of crystallization. The anhydrous $FeCl_2$ is transferred to an iron reactor, heated by induction until molten (mp, 670°C), and allowed to cool under an inert gas. The fused product is broken out of the reactor and stored in sealed containers until used as charge material.

Iron and its compounds are not considered toxic.

Calutron Operational Parameters

Ion output, 107 ma/hr
Total ion current, 180 ma/hr
Process efficiency, 10.45%
Charge consumption rate, 2.15 g Fe per beta tank hour

LANTHANUM

Natural Abundance		Stable Isobars
[a]La^{138}	0.089%	Ba^{138}
La^{139}	99.911%	Ce^{138}

The only compound which has been used in the separation of lanthanum isotopes is anhydrous lanthanum trichloride.[b] The average charge consists of 150 g $LaCl_3$ in a style C-16 graphite charge bottle.

The method of charge preparation and the recycle and recovery procedures developed for samarium are used for all rare earth elements with the exception of cerium. The rare earth techniques are described in detail only for samarium and cerium.

Calutron Operational Parameters

Ion output, 7.9 ma/hr
Total ion current, 45 ma/hr
Process efficiency, 6.85%
Charge consumption rate, 0.52 g La per alpha tank hour

---

[a] La^{138} is radioactive with a half-life of 1.1×10^{11} years.

[b] See p 5, Internal Chlorination.

LEAD

Natural Abundance		Stable Isobars
Pb^{204}	1.4%	Hg^{204}
Pb^{206}	25.2%	
Pb^{207}	21.7%	
Pb^{208}	51.7%	

Lead chloride, lead bromide, lead iodide, and lead tetraethyl have been used as charge material in the separation of lead isotopes. Lead chloride is the preferred charge material since a temperature of only 475°C is required to provide sufficient vapor pressure for satisfactory calutron operation. The fact that the compound is not hygroscopic is an additional advantage in that it permits rapid attainment of an operating vacuum in the calutron. The usual charge consists of 500 g $PbCl_2$ in a style C-16 graphite charge bottle.

Lead chloride is prepared by dissolving lead metal shot in nitric acid, filtering, and treating the filtrate with hydrochloric acid to precipitate $PbCl_2$. The $PbCl_2$ precipitate is washed with ice water to remove nitric acid. The $PbCl_2$ filtrate is combined with the wash solutions and adjusted to pH 7 using ammonium carbonate which precipitates as lead carbonate the small quantities of lead remaining in the solution. The lead carbonate is washed with water, dissolved in a minimum of dilute nitric acid, and precipitated with hydrochloric acid. The resulting $PbCl_2$ is combined with the chloride previously separated, and the salt is outgassed at 450°C for four hours. The dried $PbCl_2$ is placed in a nickel reactor and fused under an inert atmosphere using induction heating (mp, 501°C). The fused crystalline mass is broken out of the reactor and bottled.

Two samples of lead obtained as by-products from uranium and thorium ore processing, one enriched in Pb^{206} and the other in Pb^{208}, were used as feed material for special separations of lead. Radiogenic lead enriched in Pb^{206} was the end product of the radioactive decay of U^{238}; lead enriched in Pb^{208} was the end product of the radioactive decay of Th^{232}. Greater than usual care was exercised in handling these materials because of the presence of moderate radioactivity. Trace amounts of Pb^{210}, Bi^{210}, and Po^{210} were found in the Pb^{206} sample, and Pb^{210}, Bi^{210}, Po^{210}, Ra^{226}, Ra^{228}, Ac^{228}, and Th^{228} were present in the Pb^{208} feed.

Approximately 30 kg of lead concentrates in the form of mixed oxide, sulfide, and elemental lead enriched in Pb^{206} was received with the following isotopic analysis: Pb^{204}, $<0.2\%$; Pb^{206}, 87.8%; Pb^{207}, 8.9%; Pb^{208}, 3.3%. The calutron charge compound $PbCl_2$ was prepared by dissolving this lead mixture, a little at a time, in hot concentrated nitric acid. Upon cooling, lead nitrate crystallized out of solution. The lead nitrate crystals were dissolved in water, filtered, and treated with hydrochloric acid in the manner described above.

LEAD (continued)

Approximately 13.5 kg of radiogenic Pb^{208} was obtained in the form of a damp sulfate cake with the following isotopic analysis: Pb^{204}, 0.024%; Pb^{206}, 25.58%; Pb^{207}, 1.78%; Pb^{208}, 72.62%. To prepare the $PbCl_2$ calutron charge compound from this material, it was first slurried in water and mechanically stirred with solid ammonium carbonate for four hours. Very slightly soluble lead sulfate was converted by metathesis to insoluble lead carbonate. The lead sulfate and carbonate solid were separated from the liquid slurry by filtration, and lead carbonate was separated from the unconverted sulfate by dissolving in dilute nitric acid. The unconverted lead sulfate was re-treated with ammonium carbonate. Conversion of the soluble lead nitrate to $PbCl_2$ was carried out as described above.

Lead and its compounds are cumulative poisons, repeated small doses being as dangerous as a single large dose. The compounds constitute a greater hazard than the element, and breathing of the dust is more conducive to lead poisoning than ingestion of the dust. All efforts should be made to keep dusting to a minimum, and the use of a fume hood with good exhaust ventilation or use of a respirator is recommended when dusting is encountered. Rubber gloves should be used and good hygienic practices should be followed when handling lead and its compounds. An even greater degree of care should be exercised when handling radiogenic lead contaminated with varying amounts of radioactive isotopes.

Calutron Operational Parameters

Ion output, 8 ma/hr
Total ion current, 45 ma/hr
Process efficiency, 10.6%
Charge consumption rate, 0.51 g Pb per beta tank hour

LITHIUM

Natural Abundance		Stable Isobars
Li^6	7.42%	None
Li^7	92.58%	

Lithium chloride, lithium bromide, lithium iodide, and mixtures of the bromide or chloride with lithium metal have been used as charge material for the separation of the isotopes of lithium. From an operational, as well as an economical standpoint, a mixture of one part by weight Li metal and ten parts by weight LiCl forms the best charge material. The usual charge consists of 175 g LiCl–Li metal in a style C-18 graphite charge bottle.

The various halides of lithium are available commercially; but, since lithium of exceptional purity or with enhanced isotopic content was available for these separations, the halides were prepared in the laboratory. Materials having these special qualities were used and the unresolved feed material was recovered from the calutron.

Preparation of the halides of lithium consists of carefully dissolving lithium metal in water contained in a plastic beaker. After filtering, the solution is acidified with the appropriate acid, evaporated to incipient crystallization, and allowed to cool, at which time it solidifies. (Lithium salts should not be allowed to go to dryness in an evaporating dish since removal of the cake without breaking the dish becomes exceedingly difficult.) The solids are carefully removed, placed in an outgassing apparatus, and dehydrated at 400°C. Plastic containers are used whenever the lithium solution is basic to prevent sodium contamination from glassware.

Unresolved lithium charge material is recovered by washing the calutron components with dilute hydrochloric acid. The wash solution is filtered to remove any insoluble material and then is saturated with hydrogen sulfide. After filtering and washing the precipitate, which is discarded, the solution is made basic with ammonium hydroxide and again saturated with hydrogen sulfide. Filtering removes the precipitate which is washed and discarded. The solution is acidified with hydrochloric acid and boiled to agglomerate sulfur, which is removed by filtration. Upon evaporating the solution to dryness, a mixture of ammonium chloride and LiCl salts is obtained. Ammonium chloride is removed by heating the mixture to 450°C under vacuum. The remaining LiCl is fused by induction heating in a nickel container under an inert atmosphere. When cool, the fused crystalline mass of LiCl is broken out of the container and stored in sealed bottles.

Lithium metal in air ignites at 90°C and burns violently; therefore, it must not be exposed to flame or heat except under controlled conditions. Lithium metal reacts with water, releasing hydrogen which can form an explosive mixture with air. The salts of lithium are not considered dangerous chemicals although they do have poisonous effects if ingested. Lithium dissolved in water forms lithium hydroxide, which is caustic and can cause burns on the skin and mucous membranes similar to those produced by sodium hydroxide.

LITHIUM (continued)

Safety precautions for the handling of lithium and its compounds include the use of safety glasses or face shield, rubber gloves, and respirators, particularly if dusting occurs. The metal should not be inadvertently exposed to air, heat, or moisture.

Calutron Operational Parameters

Ion output, 80 ma/hr
Total ion current, 210 ma/hr
Process efficiency, 4.47%
Charge consumption rate, 0.38 g Li per beta tank hour

LUTETIUM

Natural Abundance		Stable Isobars
Lu^{175}	97.4%	Yb^{176}
[a]Lu^{176}	2.6%	Hf^{176}

The only compound which has been used in the separation of lutetium isotopes is anhydrous lutetium trichloride.[b] The average charge consists of 150 g $LuCl_3$ in a style C-16 graphite charge bottle.

The method of charge preparation and the recycle and recovery procedures developed for samarium are used for all rare earth elements with the exception of cerium. The rare earth techniques are described in detail only for samarium and cerium.

Calutron Operational Parameters

Ion output, 10 ma/hr
Total ion current, 98 ma/hr
Process efficiency, 17.1%
Charge consumption rate, 0.38 g Lu per beta tank hour

---

[a]Lu^{176} is radioactive with a half-life of 4.6×10^{10} years.

[b]See p 5, Internal Chlorination.

MAGNESIUM

Natural Abundance		Stable Isobars
Mg^{24}	78.60%	None
Mg^{25}	10.11%	
Mg^{26}	11.29%	

Magnesium chloride, magnesium bromide, magnesium iodide, and magnesium metal have been used as charge material in the separation of the isotopes of magnesium. Of the halides, magnesium bromide was the most satisfactory compound; however, Mg metal is the preferred charge since undesirable side bands are not formed during its processing. The usual charge consists of 150 g of Mg metal in a style S-16 stainless steel charge bottle.

Both Mg metal and $MgBr_2$ can be obtained from commercial sources. Magnesium bromide can also be prepared in the laboratory by neutralizing hydrobromic acid with magnesium oxide, filtering, adding ammonium bromide to the filtrate, and evaporating to dryness. The addition of ammonium bromide stabilizes $MgBr_2$ while the water of crystallization is being driven off. Excess ammonium bromide is then removed by heating to 300°C, yielding a $MgBr_2$ product which is satisfactory for calutron separation.

The principal hazard to avoid in handling magnesium is ignition of the metal. Although its ignition temperature is rather high, magnesium metal burns violently once it is ignited. Recommended protective equipment includes safety glasses and respirators if any dusting is encountered.

Calutron Operational Parameters

Ion output, 100 ma/hr
Total ion current, 245 ma/hr
Process efficiency, 13%
Charge consumption rate, 0.67 g Mg per beta tank hour

MERCURY

Natural Abundance		Stable Isobars
Hg^{196}	0.146%	Pt^{196}
Hg^{198}	10.02%	Pt^{198}
Hg^{199}	16.84%	Pb^{204}
Hg^{200}	23.13%	
Hg^{201}	13.22%	
Hg^{202}	29.80%	
Hg^{204}	6.85%	

Mercuric chloride, mercuric sulfide, and mercury metal have been used as charge material in the separation of mercury isotopes. The compounds are used as internal charges while the metal is fed to the calutron from an external source container. Mercuric sulfide proved to be the most satisfactory charge material. The average charge consists of 125 g HgS in a style X-5 stainless steel charge bottle.

Mercuric sulfide is purchased from commercial vendors and outgassed by heating under vacuum at 300°C for four hours before being used. Although the red HgS, α form, is the only type of HgS which has been used for calutron charge, there is no reason to believe that the black HgS, β form, would not be equally satisfactory.

Mercury and its compounds are considered quite toxic and should be handled in fume hoods with good exhaust ventilation. It is recommended that rubber gloves and safety glasses be worn when working with mercury, and the whole work area should be well ventilated.

Calutron Operational Parameters

Ion output, 3 ma/hr
Total ion current, 20 ma/hr
Process efficiency, 8.6%
Charge consumption rate, 0.26 g Hg per alpha tank hour

MOLYBDENUM

Natural Abundance		Stable Isobars
Mo^{92}	15.86%	Zr^{92}
Mo^{94}	9.12%	Zr^{94}
Mo^{95}	15.70%	[a]Zr^{96}
Mo^{96}	16.50%	Ru^{96}
Mo^{97}	9.45%	Ru^{98}
Mo^{98}	23.75%	Ru^{100}
Mo^{100}	9.62%	

Molybdenum pentachloride and molybdenum trioxide have been used as charge material in the separation of the isotopes of molybdenum.[b] Molybdenum trioxide is the preferred material and the usual charge consists of 200 g MoO_3 in a C-18 graphite charge bottle.

Molybdenum trioxide can be purchased, fused at 900°C in a nickel crucible, and used in the charge bottle without further processing.

When molybdenum pentachloride is used as charge material it is prepared in the laboratory by burning molybdenum metal in chlorine gas at 500°C. The resulting product consists of black deliquescent crystals having a melting point of 194°C.

Molybdenum and its compounds are not considered toxic; however, gloves and glasses should be used when handling these materials. A respirator should be employed if dusting conditions exist. Molybdenum pentachloride decomposes in moist air and evolves hydrogen chloride. These fumes are very corrosive and poisonous, and their contact with the eyes, nose, and upper respiratory track should be prevented. Adequate ventilation and personal protective equipment, including a respirator and rubber gloves, should be used when working with the pentachloride.

Calutron Operational Parameters

Ion output, 20 ma/hr
Total ion current, 160 ma/hr
Process efficiency, 10.2%
Charge consumption rate, 0.6 g Mo per beta tank hour

---

[a]Zr^{96}, natural abundance 2.8%, is radioactive with a half-life of $>2 \times 10^{14}$ years.

[b]See p 5, Internal Chlorination.

NEODYMIUM

Natural Abundance		Stable Isobars
Nd^{142}	27.09%	Ce^{142}
Nd^{143}	12.14%	Sm^{144}
[a]Nd^{144}	23.83%	Sm^{148}
Nd^{145}	8.29%	Sm^{150}
Nd^{146}	17.26%	
Nd^{148}	5.74%	
[b]Nd^{150}	5.63%	

The only compound which has been used for the separation of neodymium isotopes is anhydrous neodymium trichloride.[c] The average charge consists of 150 g $NdCl_3$ in a style C-16 graphite charge bottle.

The method of charge preparation and the recycle and recovery procedures developed for samarium are used for all rare earth elements with the exception of cerium. The rare earth techniques are described in detail only for samarium and cerium.

Calutron Operational Parameters

Ion output, 16 ma/hr
Total ion current, 110 ma/hr
Process efficiency, 13.7%
Charge consumption rate, 0.7 g Nd per alpha tank hour

---

[a]Nd^{144} is radioactive with a half-life of 2×10^{15} years.

[b]Nd^{150} is radioactive with a half-life of $> 10^{16}$ years.

[c]See p 5, Internal Chlorination.

NICKEL

Natural Abundance		Stable Isobars
Ni^{58}	67.76%	Fe^{58}
Ni^{60}	26.16%	Zn^{64}
Ni^{61}	1.25%	
Ni^{62}	3.66%	
Ni^{64}	1.16%	

Nickel chloride, nickel bromide, and nickel carbonyl have been used as charge material in the separation of nickel isotopes. Nickel chloride proved to be the most satisfactory compound and is the preferred charge material. The usual charge consists of 350 g $NiCl_2$ in a style C-18 graphite charge bottle.

Nickel chloride is purchased from commercial sources and is outgassed at 450°C under vacuum for four hours before being used as charge material.

Nickel and most of its compounds are mildly toxic and the inhalation of nickel in any form should be prevented.

Calutron Operational Parameters

Ion output, 67 ma/hr
Total ion current, 250 ma/hr
Process efficiency, 7.5%
Charge consumption rate, 1.5 g Ni per beta tank hour

Natural Abundance		Stable Isobars
Os^{184}	0.018%	W^{184}
Os^{186}	1.59%	W^{186}
Os^{187}	1.64%	Re^{187}
Os^{188}	13.3%	Pt^{190}
Os^{189}	16.1%	Pt^{192}
Os^{190}	26.4%	
Os^{192}	41.0%	

Osmium tetroxide is the only charge material which has been used in the separation of osmium isotopes. The average charge consists of 150 g OsO_4 in a style SE stainless steel charge bottle located outside the calutron unit.

Osmium tetroxide is prepared by heating osmium metal powder in a stream of oxygen. The extremely volatile osmium tetroxide is swept from the heated zone of the reactor into the cooled charge bottle. An electric heating tape wrapped around the inlet and outlet tubes of the charge bottle eliminates plugging of the openings.

A typical synthesis consists of placing 100 g osmium metal powder in a quartz boat which is inserted in a Pyrex reactor 70 cm in length by 8 cm in diameter. An inlet gas-washing bottle containing concentrated sulfuric acid is connected to a 7 mm glass tube having a Teflon stopcock which is attached to the reactor with a tapered glass joint. The exhaust end of the reactor is drawn down to a diameter of 12 mm and terminates in a tapered joint which is connected to a short length of fluorothene tubing and a metal tube with a Swagelok fitting. A cylindrical stainless steel charge bottle, 10.2 cm in diameter by 10.2 cm in length with valved stainless steel inlet and outlet tubes, is connected by the Swagelok fitting to the reactor and five gas-washing bottles. An electric tube furnace heats the reactor while cylinder nitrogen is passed through the inlet-gas scrubber, reactor, charge bottle, and exhaust train of five gas-washing bottles. When a temperature of 500°C is reached, the nitrogen flow is gradually replaced with oxygen. Osmium tetroxide is swept from the reactor and condenses in the charge bottle, which is externally cooled by a mixture of dry ice and carbon tetrachloride. Exhaust gases pass through the first gas-washing bottle, which is empty to prevent a backflow into the charge bottle; the second one, which contains 20% sodium hydroxide and an equal volume of ethanol; the third one, which is also empty; the fourth one, which contains concentrated hydrobromic acid; and the fifth one, which contains oil. A length of Tygon tubing conducts the exhaust gas from the last bottle to a fume hood where it is exhausted from the laboratory. Approximately two hours are required for the conversion and about 96% of the OsO_4 condenses in the charge bottle; approximately 2% is trapped in the sodium hydroxide and hydrobromic acid wash bottles.

OSMIUM (continued)

When the conversion is complete, heating is discontinued and nitrogen is passed through the system for ten minutes. The nitrogen is then turned off, both valves on the charge bottle are closed, and the container is removed from the system. Blank fittings and clamps are used to close all openings.

Due to the initial expense of the material and potential hazards associated with osmium, all unresolved charge material was recovered from calutron components at the end of the separation series at ORNL. In addition to the usual washing of calutron components, the mechanical and diffusion pumps were drained and flushed with Varsol (a hydrocarbon solvent). A large quantity of carbon from the source and receiver was also processed for osmium recovery. All solutions were filtered and sampled for spectrographic analysis. The following tabulation gives the type and quantity of each solution and the osmium content.

Solution	Quantity	Osmium Content
H_2O wash	5 gal	<10 ppm
HCl wash	5 gal	40 ppm
HCl wash	5 gal	30 ppm
HCl wash	5 gal	10 ppm
Diffusion oil	25 liters	1000 ppm
Kinney oil	25 gal	80 ppm
Varsol wash (hydrocarbon solvent)	45 gal	30 ppm

The low osmium content of all solutions, with the exception of the diffusion oil, justified their immediate disposal. An examination of the methods for removal of osmium from the oil indicated that this procedure was not economically feasible, and the oil was also discarded.

The accumulated solids from all solutions are combined with crushed carbon salvage and ignited in oxygen. A Vycor reactor 6.4 cm in diameter and 76 cm in length having the exhaust side drawn down and fitted with a ball joint is used for this procedure. The reactor is placed in a 7.6 cm tube furnace and connected to a train of five one-piece traps which are half filled with 50% hydrobromic acid.

The salvage material is heated to 400°C under nitrogen at which time oxygen replaces the nitrogen, and the temperature is raised to 800°C. After two reactors of carbon have been ignited, the first trap in the system is replaced with one containing fresh hydrobromic acid.

Trap solutions are combined and granular zinc, 20 mesh, is cautiously added. The resulting hydrogen reduces the osmium out of solution as the element. This reduction is continued until the supernatant is colorless. Hydrochloric acid is added when a deficiency of acid occurs. If periodic spectrographic analyses of the supernatant indicate the osmium content to be <10 ppm, filtrates are discarded.

After washing the reduced osmium with dilute hydrochloric acid and several water washes, the dried osmium is placed in the reactor, oxidized, and collected in hydrobromic acid. Excess hydrobromic acid is boiled out of the solution, the concentrate is diluted with twice its volume of water, and the pH adjusted to 6 using first sodium hydroxide and finally sodium bicarbonate. Digestion causes the resulting osmium dioxide to agglomerate and settle leaving a clear supernate. The supernate is decanted, acidified with dilute HCl, and treated with granular zinc. If no osmium is apparent, the solution is discarded.

The osmium dioxide is washed with 10% solution of ammonium chloride until a test of the wash solution for sodium is negative. Osmium dioxide is dried and reduced to the metal using hydrogen. Ammonium chloride is added to the dried osmium dioxide, the temperature is slowly increased to 900°C, and this temperature is held for three hours or until the reduction appears complete. Ammonium chloride is added to eliminate the possibility of conflagration during hydrogen reduction. Heat is discontinued, the reactor is allowed to cool to 300°C, at which temperature the hydrogen flow is replaced by carbon dioxide, and the reactor cooled to room temperature. Cooling in carbon dioxide keeps hydrogen adsorption to a minimum in the osmium metal powder; otherwise, exposure of osmium containing adsorbed hydrogen to air would produce a catalyzed oxidation of hydrogen causing an explosion.

Metallic osmium is innocuous but irritating effects of OsO_4 have long been recognized as dangerous. One fatal case has been reported resulting from inhalation of OsO_4 which caused capillary bronchitis. However, the principal effects of exposure are those of ocular disturbances, including either temporary or permanent loss of sight, and the halo effect around lights. Mucous membranes of the nose, throat, and bronchi are also attacked by OsO_4 vapors, and dermatitis and ulceration can result from skin contact. A well exhausted hood, gloves, goggles, and use of copious quantities of soap and water should eliminate the hazards of OsO_4. A good canister type gas mask should be available for use in case of emergency.

Calutron Operational Parameters

Ion output, 4.4 ma/hr
Total ion current, 100 ma/hr
Process efficiency, 1.3%
Charge consumption rate, 2.3 g Os per alpha tank hour

PALLADIUM

Natural Abundance		Stable Isobars
Pd^{102}	0.96%	Ru^{102}
Pd^{104}	10.97%	Ru^{106}
Pd^{105}	22.2%	Cd^{106}
Pd^{106}	27.3%	Cd^{108}
Pd^{108}	26.7%	Cd^{110}
Pd^{110}	11.8%	

Powdered palladium metal is the only charge material which has been used in the separation of palladium isotopes. The metal is used in a special graphite source block which is heated by electron bombardment (Fig. 1, p 4).

Because of the high cost of Pd, unresolved charge material is recycled and recovered. The source, receiver, and liner are washed in nitric acid and the solution is filtered and evaporated to a small volume. Concentrated hydrochloric acid is added in sufficient quantity to combine with the nitric acid present to form aqua regia, and the solution is evaporated to dryness forming palladium dichloride. Solids removed in the filtration are combined with the graphite salvage and ignited in oxygen. The ash produced is leached with aqua regia until all the Pd is dissolved. Combined leach solutions are evaporated to dryness yielding palladium dichloride.

The palladium dichloride solids are combined and treated with concentrated ammonium hydroxide until they are completely dissolved. This forms a solution of tetramminepalladous chloride which, when acidified with hydrochloric acid, precipitates the yellow dichlorodiammine palladium. The precipitate is removed by filtering, and the filtrate is treated with an alcoholic solution of dimethylglyoxime to recover traces of palladium not precipitated as the dichlorodiammine. The dimethylglyoxime precipitate is filtered, washed with alcohol, and transferred to a beaker where it is digested with nitric acid. When the precipitate is dissolved, ammonium hydroxide is added until the solution is basic. The solution is then acidified with formic acid and digested to precipitate elemental Pd.

The yellow dichlorodiammine palladium from the first precipitation is transferred to a crucible and thermally decomposed to the element, which will contain a small amount of blue palladium oxide. This mixture is combined with the metal from the formic acid reduction and digested with formic acid to insure that all the palladium is in the elemental form. The product is dried at 110°C and stored for future use.

Palladium and its compounds are not considered toxic.

Calutron Operational Parameters

Ion output, 10 ma/hr

Total ion current, 180 ma/hr

Process efficiency, 3.33%

Charge consumption rate, 1.25 g Pd metal per beta tank hour

PLATINUM

Natural Abundance		Stable Isobars
[a]Pt^{190}	0.0127%	Os^{190}
Pt^{192}	0.78%	Os^{192}
Pt^{194}	32.9%	Hg^{196}
Pt^{195}	33.8%	Hg^{198}
Pt^{196}	25.2%	
Pt^{198}	7.19%	

Platinum metal and platinum dicarbonyl dichloride have been used as charge material in the separation of platinum isotopes. It was found that platinum dicarbonyl dichloride decomposes under operating conditions of the calutron making it unsatisfactory for use as a feed material. Platinum metal is used in a special graphite source block which is heated by electron bombardment (Fig. 1, p 4).

Due to the high cost of Pt, the unresolved charge material is recycled and recovered. Approximately 90% of the un-ionized feed can be recovered from the charge container by mechanical means. The remainder is recovered by washing calutron components and by igniting graphite salvage.

The source, receiver, and liner are washed with nitric acid. After filtering, the wash solution is evaporated to dryness and analyzed for Pt. Usually no Pt is detected in the filtrate and it is discarded. The solids are dried, ignited at 800°C and combined with the ash remaining after all graphite salvage has been burned.

Solids from the ignitions are repeatedly leached with aqua regia until no additional Pt is recovered. The remaining solids are dried, reduced with hydrogen at 600°C, and again leached with aqua regia, which yields some additional Pt. The combined aqua regia leach solutions are repeatedly evaporated with hydrochloric acid to remove nitric acid and finally evaporated to dryness yielding chloroplatinic acid. These crystals are dissolved in 1 *N* hydrochloric acid, filtered, and treated with an excess of ammonium chloride and an equal volume of ethanol, producing the bright yellow salt ammonium chloroplatinate. The insoluble salt is filtered, washed with 20% ammonium chloride, and reduced to metal with hydrogen at 600°C. Spectrographic analysis of the recovered Pt metal indicates only traces of impurity.

Unlike salts of the other platinum metals, platinum salts have been known to cause intoxication, wheezing, coughing, irritation of the nose, tightness in the chest, shortness of breath, and cyanosis. To avoid these symptoms, skin contact with these compounds should be minimized, and a chemical respirator should be employed when dusting may be encountered.

---

[a]Pt^{190}, *is radioactive with a half-life of* 10^{12} *years.*

Calutron Operational Parameters

Ion output, 9 ma/hr

Total ion current, 280 ma/hr

Process efficiency, 8.26%

Charge consumption rate, 0.79 g Pt metal per beta tank hour

POTASSIUM

Natural Abundance		Stable Isobars
K^{39}	93.08%	Ar^{40}
[a]K^{40}	0.0119%	Ca^{40}
K^{41}	6.91%	

Potassium chloride, potassium bromide, potassium iodide, and massive potassium metal have been used as charge material in the separation of the isotopes of potassium. In earlier separations using a low temperature source unit, heat limitations confined the choice of charge material to potassium iodide and potassium metal. Since development of the medium temperature source unit, M-16, any of the above materials can be used satisfactorily; however, experience has established fused KCl as the best charge material. The usual charge consists of 120 g KCl in a style S-16 stainless steel charge bottle.

Potassium chloride usually is obtained from commercial sources and requires no special processing prior to use. One special charge, which had been enriched in K^{40} by reactor irradiation, was received as a KCl solution containing 0.19% K^{40} and was prepared for the calutron by precipitating the perchlorate and carefully decomposing it to KCl at 650°C.

Although unresolved potassium charge material is not usually recycled and recovered, this procedure is used with enriched feed materials. The calutron components are washed with dilute hydrochloric acid. The wash solution is filtered to remove solids, and these solids are washed and discarded. Hydrogen sulfide is then passed through the filtered wash solution for 30 min. After settling, the precipitate is separated by decanting and washed with three portions of dilute hydrochloric acid saturated with hydrogen sulfide. The precipitate is filtered on paper, washed, and discarded. The combined filtrates and wash solutions are adjusted with ammonium hydroxide to a pH of 9.0 and saturated with hydrogen sulfide. Again the precipitate is washed by decantation, filtered, and discarded. The solution is then acidified with hydrochloric acid and boiled to agglomerate sulfur, which is removed by filtration, washed, and discarded. Dilute barium chloride solution is added to remove any sulfate which forms by air oxidation of the sulfide. Excess barium is removed by the addition of ammonium carbonate. Both barium sulfate and barium carbonate precipitates are removed by filtration, washed, and discarded.

The solution is then evaporated to incipient dryness, and the ammonium salts destroyed by digestion with aqua regia. It is imperative to destroy all ammonium salts in order to prevent the formation of potentially explosive ammonium perchlorate later in the process. After removal of ammonium salts, the solution is evaporated to dryness. The potassium salt is dissolved in water and filtered to remove any insolubles, and these insolubles are washed and discarded. The filtered solution is concentrated by evaporation and cooled before adding an excess of perchloric acid.

---

[a]K^{40} is radioactive with a half-life of 1.3×10^9 years.

The mixture is chilled in a refrigerator and, while still cold, is filtered through a sintered glass funnel. The potassium perchlorate precipitate is transferred to a quartz dish, covered with a platinum lid, and slowly heated to 650°C. Decomposition begins in the 400° to 450°C range at which time the potassium perchlorate liquifies and has a tendency to spatter and creep. After ignition, the KCl is cooled, dissolved in water, and filtered to remove a small amount of silica leached from the quartz dish. The filtered solution of KCl is then evaporated to dryness in a Pyrex beaker, heated to 300°C, cooled, and stored in sealed bottles.

Although the industrial hazards pertaining to potassium and its compounds are few, the oxide and hydroxide are extremely caustic and will cause burns on the skin. Since potassium metal is pyrophoric, heat and all oxidizing conditions should be avoided. The greatest potential hazard in the above method of potassium recovery is the use of perchloric acid. This acid, plus heat and in the presence of ammonium salts or readily oxidizable substances such as organics, can cause violent explosive conditions. Safety precautions for the handling of potassium and its compounds include the use of safety glasses or face shields, rubber gloves, and respirators, particularly if dusting occurs.

Calutron Operational Parameters

Ion output, 30 ma/hr
Total ion current, 110 ma/hr
Process efficiency, 11.6%
Charge consumption rate, 0.4 g K per beta tank hour

RHENIUM

Natural Abundance		Stable Isobars
Re^{185}	37.07%	Os^{187}
[a]Re^{187}	62.93%	

Rhenium heptoxide and rhenium pentachloride have been used as charge material in the separation of the isotopes of rhenium.[b] Both compounds can be used; however, Re_2O_7 is preferred since the charge consumption rate is lower. The usual charge consists of 150 g Re_2O_7 in a style S-12 stainless steel charge bottle.

Rhenium heptoxide is prepared by burning the powdered metal in oxygen. The metal ignites at about 400°C and burns violently until conversion to rhenium trioxide is complete. Additional heat and oxygen serves to complete the oxidation to the yellow Re_2O_7. All equipment used for the conversion must be extremely clean and dry since any organic matter will reduce Re_2O_7 to a lower oxide, and moisture will hydrolyze the oxide to perrhenic acid. The flow rate of oxygen must be carefully controlled since too rapid a flow will carry Re_2O_7 through the exhaust traps in the form of a white smoke. Too low a flow rate, combined with the rapid burning of rhenium metal, may create a partial vacuum within the reactor causing the exhaust trap solution to flow into the reactor.

The reactor used for the preparation of Re_2O_7 consists of a Pyrex tube 7.6 cm in diameter by 50 cm in length having a large ball joint on each end. A gas-washing bottle containing concentrated sulfuric acid is attached to the inlet end of the reactor. The exhaust end of the reactor is attached to a U-trap with the lower two-thirds of the trap immersed in a cold-bath of carbon tetrachloride and dry ice. Following the cold trap and connected by ball-and-socket joints are, in order, an empty trap, a sulfuric acid trap, another empty trap, and an ammonium hydroxide trap. The entire apparatus is fabricated of glass and is held together with clamps. An electric tube furnace 45 cm in length is used to heat the reactor.

Approximately 125 g powdered rhenium metal contained in a Pyrex boat is inserted into the reactor. Cylinder oxygen feeds through the sulfuric acid wash bottle, to remove moisture, and passes into the reactor as the heat is gradually increased to 400°C. Careful attention must be given to the oxygen flow rate as the temperature approaches 400°C. After the oxidation to rhenium trioxide appears complete, the temperature is increased to 450°C. Volatile Re_2O_7 is formed, sublimes, and condenses in the cold U-trap. Upon completion of the reaction, the apparatus is allowed to cool and the hygroscopic Re_2O_7 is quickly transferred from the U-trap directly into the charge bottle.

---

[a]Re^{187} is radioactive with a half-life of 5×10^{10} years.

[b]See p 5, Internal Chlorination.

Due to the high cost of rhenium metal it is necessary to recycle and recover the unresolved charge material. The source, receiver, and liner are washed in a 10% solution of sodium hydroxide containing a few percent hydrogen peroxide. The wash solution is acidified to a pH of 2.0 with sulfuric acid, digested, and filtered. The solids are washed with water and held for additional treatment. The filtrate is combined with washings from the sodium hydroxide precipitation, and the solution is neutralized with hydrochloric acid. An additional amount of hydrochloric acid is then added to bring the solution up to 10% hydrochloric acid. The solution is heated to 70°C and saturated with hydrogen sulfide for four hours in a pressure bottle. The rhenium sulfide precipitate is allowed to settle, the supernatant is decanted, and the precipitate washed by decantation, using a 10% hydrochloric acid solution saturated with hydrogen sulfide. Rhenium sulfide is collected on a fritted glass funnel and the filtrate is again saturated with hydrogen sulfide. When no additional precipitate is formed with hydrogen sulfide, sodium thiosulfate is added and the solution boiled for 15 min. Two thiosulfate precipitations usually remove all the rhenium and the last filtrate can be discarded. Use of ammonium hydroxide and nitric acid should be avoided in the initial phases of the procedure since ammonia will complex copper and nickel, thus preventing their removal in the hydroxide precipitation, and nitric acid interferes with the hydrogen sulfide precipitation.

The combined rhenium sulfide precipitate is carefully dissolved in 10% ammonium hydroxide containing a few percent of hydrogen peroxide, filtered, and evaporated to dryness. The residue is dissolved in water producing a blue-colored solution which indicates that rhenium is in a reduced valence state. The solution is oxidized by the addition of a small amount of ammonium hydroxide and hydrogen peroxide. A colorless solution of ammonium perrhenate results and is evaporated to crystallization. The crystals are dried and reduced to metal by gradually heating to 900°C in a flow of hydrogen. The solution remaining from the crystallization is evaporated to dryness and also reduced to metal; however, the purity of this metal is somewhat lower than that produced from the crystals. After reduction, the metal is washed with water, vacuum dried, and stored for future use.

Solids from the initial filtration are combined with other salvage solids and placed in a large bottle containing 10% sodium hydroxide. Live steam is passed through the solution while hydrogen peroxide is slowly added from a burette. The resulting leach solution is filtered and processed as above.

Rhenium and its compounds are not considered toxic.

RHENIUM (continued)

Calutron Operational Parameters

Ion output, 10.5 ma/hr

Total ion current, 60 ma/hr

Process efficiency, 8%

Charge consumption rate, 0.89 g Re metal per beta tank hour

RUBIDIUM

Natural Abundance		Stable Isobars
Rb^{85}	72.15%	Sr^{87}
[a]Rb^{87}	27.85%	

Both rubidium chloride and rubidium iodide have been used satisfactorily in the separation of the isotopes of rubidium but RbCl is preferred. The usual charge consists of 100 g RbCl in a style S-16 stainless steel charge bottle.

Rubidium chloride is purchased from a commercial vendor and outgassed under vacuum before being used as charge material.

Due to the high cost of this material, recovery of unresolved charge material is made at the completion of the separation. Calutron source, receiver, and liner parts are washed with dilute hydrochloric acid. The wash solution is filtered to remove any insoluble material and the residue is washed and discarded. After filtering, the wash solution is saturated with hydrogen sulfide and filtered to remove the insoluble sulfides, which are washed and discarded. The solution is made basic with ammonium hydroxide, again saturated with hydrogen sulfide, and filtered. The resulting insoluble sulfides are washed and discarded. The solution is acidified with hydrochloric acid and boiled to agglomerate sulfur, which is removed by filtration. Upon evaporating the solution to dryness, a mixture of RbCl and ammonium chloride is obtained. Heating the mixed salts to 350°C under vacuum removes ammonium chloride and leaves anhydrous RbCl ready to be reused as charge material.

Industrially, rubidium and its compounds have negligible toxic effects but the hydroxide is quite caustic and will cause skin burns. The metal is pyrophoric. Safety precautions for the handling of rubidium compounds include the use of safety glasses or face shields, rubber gloves, and respirators, if dusting is encountered.

Calutron Operational Parameters

Ion output, 25 ma/hr
Total ion current, 120 ma/hr
Process efficiency, 14.1%
Charge consumption rate, 0.63 g Rb per beta tank hour

---

[a]Rb^{87} is radioactive with a half-life of 5×10^{10} years.

RUTHENIUM

Natural Abundance		Stable Isobars
Ru^{96}	5.57%	$^{a}Zr^{96}$
Ru^{98}	1.86%	Mo^{96}
Ru^{99}	12.7%	Mo^{98}
Ru^{100}	12.6%	Mo^{100}
Ru^{101}	17.1%	Pd^{102}
Ru^{102}	31.6%	Pd^{104}
Ru^{104}	18.5%	

Powdered ruthenium metal is the only charge material which has been used for the separation of the isotopes of ruthenium. The metal is used in a special graphite source block which is heated by electron bombardment (Fig. 1 p 4).

Because of the initial cost of Ru, unresolved charge material is recycled and recovered. A preliminary recovery of unused material by mechanical means will reclaim approximately 90% of the ruthenium available from the source. The source, receiver and liner parts are then washed with nitric acid. The washings are filtered and the filtrate is discarded after testing determines that no ruthenium is present. The solids are dried, combined with the carbon salvage, and ignited at 800°C until only ash remains. It is necessary to use a hydrochloric acid trap to scrub exhaust gases from this ignition in the event that any volatile ruthenium tetroxide forms. The carbon must be burned completely to eliminate reducing conditions in subsequent operations.

Ash from the ignition is given an oxidizing fusion using 5:1 potassium hydroxide–potassium nitrate in a silver dish. The molten mass is poured into a stainless steel tray and allowed to cool. The melt is leached with water in a plastic container and filtered. The solids are added to the next batch of salvage to be processed. The filtered leachings, containing Ru as potassium ruthenate, are acidified with hydrochloric acid, and sodium bicarbonate is added until the pH is 7. Boiling at this point precipitates the Ru as the hydrated dioxide which is removed by filtration, washed with water, and dried. The filter paper and contents are ignited at 800°C in a hydrogen atmosphere reducing ruthenium to metal. The metal product is washed with water until all sodium salts are removed; washed successively with hydrochloric acid, nitric, acid and water; dried; and returned to use.

Ruthenium is considered toxic. When heated in air it evolves fumes which are injurious to the eyes and lungs, a characteristic ruthenium has in common with osmium. Gas-tight goggles and a respirator should be worn when handling ruthenium and its compounds. Ruthenium tetroxide is an explosive compound and if it is to be stored, it should not be placed next to organics or other substances which oxidize readily.

---

[a] Zr^{96}, natural abundance 2.8%, is radioactive with a half-life of 2×10^{14} years.

Calutron Operational Parameters

Ion output, 3 ma/hr

Total ion current, 240 ma/hr

Process efficiency, 3.2%

Charge consumption rate, 0.32 g Ru metal per beta tank hour

SAMARIUM

Natural Abundance		Stable Isobars
Sm^{144}	3.16%	[b]Nd^{144}
[a]Sm^{147}	15.07%	Nd^{148}
Sm^{148}	11.27%	[c]Nd^{150}
Sm^{149}	13.84%	Gd^{152}
Sm^{150}	7.47%	Gd^{154}
Sm^{152}	26.63%	
Sm^{154}	22.53%	

Samarium dichloride and fused samarium trichloride have been used as charge material for the separation of samarium isotopes. The trichloride is the preferred charge since its vapor pressure is higher than that of the dichloride. The average charge consists of 150 g $SmCl_3$ in a style C-16 graphite charge bottle.

Rare earth oxides, with the exception of cerium, can be converted to the anhydrous trichloride by using various chlorinating agents either alone or in the presence of a reducing agent. Heating samarium oxide in an excess of ammonium chloride is the procedure preferred by ORNL Charge Laboratory because of the simplicity of the operation, its adaptability to a large scale process, and the favorable economic considerations. The presence of more than the stoichiometric amount of ammonium chloride effectively eliminates hydrolysis of the chloride and prevents formation of a basic salt. Excess ammonium chloride is volatilized from the anhydrous $SmCl_3$ by heating in a vacuum at 450°C.

A typical conversion consists of mixing 150 g samarium oxide with 300 g ammonium chloride in a 2000 ml Vycor dish and heating the mixture over a gas flame, stirring frequently to maintain a homogeneous mixture. Heating and stirring are continued until an aliquant of the mixture is completely soluble in water. (This simple test proves quite effective in determining completion of reaction since the rare earth chloride is soluble, while the oxide and basic salts are not.) Approximately one hour is required for the conversion of 150 g of samarium oxide to $SmCl_3$.

The anhydrous $SmCl_3$ is a light fluffy powder and in order to get the required amount into the charge bottle it is necessary to press the material into a dense cake. Compression using several thousand psi produces a more compact form which serves well as a calutron charge material.

Due to the high cost of samarium and most rare earths, the unresolved charge materials are recycled and recovered. The source, receiver and liner parts are washed in dilute nitric acid.

---

[a]Sm^{147} is radioactive with a half-life of 1.3×10^{11} years.

[b]Nd^{144}, natural abundance 23.83%, is radioactive with a half-life of $\sim 2 \times 10^{15}$ years.

[c]Nd^{150}, natural abundance 5.63%, is radioactive with a half-life of $> 10^{16}$ years.

The solution is filtered, made basic with ammonium hydroxide, and the insoluble hydroxides are allowed to settle. Washing the precipitate with 5% ammonium hydroxide and decanting is repeated until the supernatant is practically colorless, which indicates that nearly all of the nickel and copper have been removed as the soluble ammonia complexes. The precipitate is then filtered, washed with water, and dissolved with a minimum of dilute hydrochloric acid. Samarium is precipitated from this solution as the oxalate using solid oxalic acid. Optimum conditions for the quantitative precipitation of samarium are found to be a pH in the range of 2–4, use of an excess of oxalic acid crystals, use of a fine frit glass funnel for filtering, and washing with dilute oxalic acid solution to avoid peptization. All oxalate filtrates are allowed to stand three days and any additional small amount of samarium oxalate which settles out is recovered before discarding the solution.

The samarium oxalate is dried and ignited to the oxide at 800°C. Usually a small amount of iron from the liner wash solution is carried through the procedure and appears as a contaminant in the oxide. This small amount of iron is removed by dissolving the oxide in concentrated nitric acid and repeating the hydroxide and oxalate purification steps.

In the chemical recovery of rare earth elements it is important to note that the hydroxides show a decrease in solubility with increased atomic number, while the solubility of oxalates increases with increased atomic number. Additional small quantities of rare earth elements may be recovered by reprocessing the ammonia and oxalate filtrates, the amount depending upon the particular rare earth involved.

Samarium, like other rare earths, is not considered toxic; however, a fume hood with good exhaust ventilation is recommended, particularly during chlorination with ammonium chloride.

Calutron Operational Parameters

Ion output, 12.7 ma/hr
Total ion current, 85 ma/hr
Process efficiency, 9.8%
Charge consumption rate, 0.74 g Sm per beta tank hour

SELENIUM

Natural Abundance		Stable Isobars
Se^{74}	0.87%	Ge^{74}
Se^{76}	9.02%	Ge^{76}
Se^{77}	7.58%	Kr^{78}
Se^{78}	23.52%	Kr^{80}
Se^{80}	49.82%	Kr^{82}
Se^{82}	9.19%	

Selenium tetrachloride, selenium dioxide, and selenium metal have been used as charge material in the separation of selenium isotopes. The oxide is preferred. The usual charge consists of 500 g SeO_2 in a style X-5 stainless steel charge bottle.

Selenium dioxide may be easily prepared in the laboratory. Selenium metal pellets are dissolved in hot concentrated nitric acid forming selenious acid. The solution is evaporated to dryness and the solid selenious acid is heated until the yellow color disappears, leaving the white product SeO_2. The SeO_2 is outgassed by heating to 300°C, or just below its sublimation temperature of 317°C, for two hours.

Selenium tetrachloride may be prepared by reacting the metal with chlorine gas under a protective blanket of liquid carbon tetrachloride. Selenium metal pellets are placed in a flask and covered with carbon tetrachloride. Chlorine gas is then passed through the carbon tetrachloride. The chlorine gas flow must be carefully controlled since the reaction is exothermic and temperatures above 65°C tend to produce selenium monochloride. After conversion to the yellow solid selenium tetrachloride is complete, the product is transferred from the flask to a suitable storage container, care being taken to maintain a layer of carbon tetrachloride over it. Selenium tetrachloride is hygroscopic and the layer of carbon tetrachloride protects it from atmospheric moisture.

Selenium and its compounds are toxic. Every precaution should be taken to eliminate the possibility of ingestion, inhalation, or skin absorption. It is recommended that a fume hood with good exhaust ventilation be used, and respirator, rubber gloves, and safety goggles be worn when working with selenium and its compounds.

Calutron Operational Parameters

Ion output, 8.2 ma/hr
Total ion current, 100 ma/hr
Process efficiency, 1.3%
Charge consumption rate, 1.6 g Se per alpha tank hour

SILICON

Natural Abundance		Stable Isobars
Si^{28}	92.18%	None
Si^{29}	4.70%	
Si^{30}	3.12%	

Liquid silicon tetrachloride is the only material which has been used in the separation of silicon isotopes. This material is purchased from a commercial source and supplied to the calutron from a style SE container located outside the calutron unit.

Silicon tetrachloride is a corrosive liquid. When exposed to atmospheric moisture it hydrolyzes to form hydrogen chloride, which is very toxic. The vapors of $SiCl_4$ will cause damage to ocular and respiratory membranes as well as the skin surface, and the capacity of this compound for destroying blood cells is considerable. Protective measures to be observed while handling this material include wearing safety clothing, rubber gloves, gas-tight goggles, and a respirator suitable for absorbing gaseous materials.

Calutron Operational Parameters

Ion output, 20 ma/hr
Total ion current, 170 ma/hr
Process efficiency, 4.1%
Charge consumption rate, 0.43 g Si per beta tank hour

SILVER

Natural Abundance		Stable Isobars
Ag^{107}	51.35%	None
Ag^{109}	48.65%	

Silver chloride, silver bromide, and silver iodide have been used as charge material for the separation of the isotopes of silver. All three compounds were used successfully, but from an operational and economical standpoint AgCl is preferred. The usual charge consists of 500 g AgCl in a style C-18 graphite charge bottle.

Silver chloride is prepared in the laboratory by dissolving silver metal in nitric acid and precipitating the chloride by addition of hydrochloric acid. The insoluble AgCl is isolated by filtration, washing, drying, and outgasing at 400°C for four hours before being used as charge material.

Due to the initial cost of silver, the unresolved charge material is recycled and recovered. Calutron source, receiver, and liner are washed with nitric acid, and the solution is filtered. The solids are reduced with hydrogen at 700°C for three hours, leached with hot 25% nitric acid until no more silver is dissolved, and again filtered. These filtrates are combined, and silver is precipitated by the addition of concentrated hydrochloric acid. The AgCl is filtered, washed with water until the ring test for nitrate ion is negative, and dried and outgassed for four hours at 400°C. The material is then ready to be reused as charge material.

The soluble silver salts are toxic but the metal itself is insoluble, inactive and safe to handle. Personnel exposed to the dust of silver or its compounds should wear safety goggles, gloves, and respirators.

Calutron Operational Parameters

Ion output, 46 ma/hr
Total ion current, 100 ma/hr
Process efficiency, 6.34%
Charge consumption rate, 2.93 g Ag per beta tank hour

STRONTIUM

Natural Abundance		Stable Isobars
Sr^{84}	0.56%	Kr^{84}
Sr^{86}	9.86%	Kr^{86}
Sr^{87}	7.02%	$^{a}Rb^{87}$
Sr^{88}	82.56%	

Charge materials which have been used for the separation of the isotopes of strontium include strontium bromide and strontium metal. The use of $SrBr_2$ as a charge material permits the simultaneous collection of the isotopes of both strontium and bromine. The usual charge consists of 250 g $SrBr_2$ in a style C-16 graphite charge bottle. Strontium metal is the preferred charge material for those separations in which bromine is of no interest. The usual Sr metal charge consists of 175 g of the element in a style S-18 stainless steel charge bottle.

Strontium bromide can be procured from commercial sources; however, it also has been prepared from the metal and carbonate by the procedure described for bromine.

When using Sr metal as charge material it is necessary to isolate the strontium vapor from hot graphite source components. The inside of the ionization chamber is lined with stainless steel, and the graphite exit slit is replaced with one fabricated from stainless steel.

Strontium metal is considered a fire hazard since it reacts with moisture to evolve hydrogen, which can form an explosive mixture. The use of rubber gloves and safety glasses is recommended when handling strontium and its compounds.

Calutron Operational Parameters

Ion output, 49 ma/hr
Total ion current, 180 ma/hr
Process efficiency, 20.1%
Charge consumption rate, 0.8 g Sr metal per beta tank hour

$^{a}Rb^{87}$, natural abundance 27.85%, is radioactive with a half-life of 5×10^{10} years.

SULFUR

Natural Abundance		Stable Isobars
S^{32}	95.018%	Ar^{36}
S^{33}	0.750%	
S^{34}	4.215%	
S^{36}	0.017%	

Antimony pentasulfide, ammonium polysulfide, carbon disulfide, and hydrogen sulfide have been used as charge material in the separation of sulfur isotopes. Carbon disulfide provides the best operating characteristics and is the preferred material. The usual charge consists of 500 g CS_2 in a style SE stainless steel charge bottle which is located outside the calutron vacuum chamber.

Carbon disulfide is procured from commercial sources and transferred with extreme care directly into charge bottles.

The use of CS_2 as a charge material presents a major health hazard since it is not only extremely toxic but also highly inflammable. It is as poisonous as hydrogen cyanide and produces a narcotic effect. The fact that carbon disulfide has a very obnoxious odor, even at very low concentrations, helps to minimize exposure. The volatility of carbon disulfide is only 1.8 times less than diethyl ether, its flash point is $-25°C$, and at a temperature between 125 and 135°C it ignites spontaneously in air.

Carbon disulfide should be properly confined at all times to prevent the formation of an explosive mixture with air. All transfers of the liquid from container to charge bottle should be performed in a fume hood with good exhaust ventilation. Protective clothing, rubber gloves, safety goggles, and respirators should be used when handling carbon disulfide. Contamination on the skin should be immediately washed with soap and a copious amount of water.

Calutron Operational Parameters

Ion output, 31.3 ma/hr
Total ion current, 140 ma/hr
Process efficiency, 2.3%
Charge consumption rate, 1.6 g S per beta tank hour

TANTALUM

Natural Abundance		Stable Isobars
[a]Ta^{180}	0.0123%	Hf^{180}
Ta^{181}	99.9877%	[b]W^{180}

Tantalum pentachloride is the only charge material which has been used in the separation of tantalum isotopes.[c] The average charge consists of 500 g $TaCl_5$ in a style X-5 stainless steel charge bottle.

Tantalum forms several compounds with chlorine but the most important, from a calutron separation standpoint, is the pentachloride. Tantalum pentachloride may be prepared by the action of chlorine, phosphorus pentachloride, or sulfur monochloride on tantalum oxide and by the action of chlorine on tantalum metal. The latter method is preferred at ORNL since it permits use of scrap tantalum calutron filaments and because of the simplicity of preparations. The scrap filaments should be free of tungsten and hafnium since these two elements form volatile chlorides and each has an isotope of mass 180.

The chlorination reaction is carried out in a Vycor reactor tube 80 cm long and 7.5 cm in diameter heated by an electric tube furnace. The gas inlet end of the reactor tube is constricted to a diameter of 10 mm and terminates in a Pyrex ball joint. Chlorine and nitrogen cylinder gases are fed through a glass T-tube into a gas-washing bottle containing concentrated sulfuric acid, then into the reactor through a ball-joint connection. A rubber stopper fitted with a short piece of glass tubing is inserted into the downstream end of the reactor, and exhaust gases are led to a fume hood through a connecting length of rubber tubing.

About 300 g of tantalum metal in the form of used filament scrap is placed in a quartz combustion boat and inserted in the heated end of the reactor. While the furnace is heating gradually to 300°C, nitrogen is passed through the reactor. Before chlorine is admitted to the reactor, any moisture evidenced in the cold end of the tube is driven off by flame treating. When the system is thoroughly dry, chlorine is admitted the nitrogen flow is discontinued, and the temperature is slowly raised to 625°C. The rate of reaction can be controlled by the flow of chlorine. At a high flow rate the tantalum actually burns and becomes incandescent. Tantalum pentachloride is formed immediately and transported to the cool end of the tube, where it accumulates. The product is periodically raked out of the reactor and stored in sealed bottles. When all of the tantalum is converted, the tube and contents are allowed to cool under a flow of chlorine gas. The tube is then flushed with nitrogen for 15 min and any remaining $TaCl_5$ is recovered from the reactor.

---

[a]Ta^{180} is radioactive with a half-life of $> 10^7$ years.

[b]W^{180}, natural abundance 0.135%, is radioactive with a half-life of 3×10^{14} years.

[c]See p 5, Internal Chlorination.

TANTALUM (continued)

Tantalum pentachloride decomposes in moist air and evolves hydrogen chloride. These fumes are very corrosive and poisonous, and precautions should be taken to prevent their contact with the eyes, nose, and upper respiratory tract. Adequate ventilation and personnel protective equipment, including a respirator and rubber gloves, should be used when working with $TaCl_5$.

Calutron Operational Parameters

Ion output, 15.1 ma/hr
Total ion current, 150 ma/hr
Process efficiency, 7.9%
Charge consumption rate, 1.3 g Ta per beta tank hour

Natural Abundance		Stable Isobars
Te^{120}	0.089%	Sn^{120}
Te^{122}	2.46%	Sn^{122}
[a]Te^{123}	0.87%	Sn^{124}
Te^{124}	4.61%	Sb^{123}
Te^{125}	6.99%	Xe^{124}
Te^{126}	18.71%	Xe^{126}
Te^{128}	31.79%	Xe^{128}
Te^{130}	34.49%	Xe^{130}
		Ba^{130}

Tellurium tetrabromide, tellurium tetrachloride, tellurium dioxide, and tellurium metal have been used as charge material in the separation of tellurium isotopes. The oxide is preferred over the bromide or the chloride since it has a lower vapor pressure. The usual charge consists of 450 g TeO_2 in a style C-16 graphite charge bottle.

Tellurium dioxide is prepared by dissolving the metal in hot nitric acid and pouring the resulting solution into a beaker of cool water, causing hydrolysis and precipitation of tellurous acid. Warming to 50°C converts tellurous acid to TeO_2 which is removed by filtration, washed, transferred to an evaporating dish, and heated at 400°C for two hours under vacuum. After cooling, the material is stored in sealed containers. Tellurium dioxide does not sublime at atmospheric pressure but melts to a dark yellow liquid at 452°C.

Tellurium tetrabromide can be prepared by gradually adding the metal to an excess of liquid bromine. The reaction vessel should be immersed in an ice bath since the reaction is highly exothermic and may be difficult to control. Excess bromine is removed by heating and leaves the desired compound, tellurium tetrabromide.

Tellurium tetrachloride can be formed by the direct combination of the elements at 350°C. The rate of reaction is controlled by the flow rate of chlorine gas.

Tellurium and its compounds are quite toxic. Every precaution must be taken to eliminate the possibility of ingestion, inhalation, or skin absorption. The use of a fume hood with good exhaust ventilation and the wearing of respirator, rubber gloves, and safety goggles are strongly recommended when handling tellurium and its compounds.

---

[a]Te^{123} is radioactive with a half-life of $> 10^{14}$ years.

TELLURIUM *(continued)*

Calutron Operational Parameters

Ion output, 25 ma/hr

Total ion current, 200 ma/hr

Process efficiency, 4.78%

Charge consumption rate, 1.72 g Te per alpha tank hour

THALLIUM

Natural Abundance		Stable Isobars
Tl^{203}	29.5%	None
Tl^{205}	70.5%	

Thallous chloride, thallous bromide, thallous iodide, and thallic iodide have been used as charge material in the separation of the isotopes of thallium. The monoiodide, TlI, is the preferred material from an operational standpoint. The usual charge consists of 500 g TlI in a style X-5 stainless steel charge bottle.

Elemental thallium is used as a starting material for the preparation of TlI. Thallium metal is added in small portions to hot concentrated nitric acid until all the acid is consumed. When the solution is allowed to cool, a large deposit of thallous nitrate crystals is formed. After decanting the supernatant liquid, the crystals are dissolved in hot water and diluted to approximately twice the volume. The solubility of thallous nitrate in water at room temperature is about 9.6 g per 100 ml.

The thallous nitrate solution is made basic with sodium hydroxide and a few milliliters of sulfurous acid are added to keep the thallium in a reduced state. Thallous iodide is precipitated quantitatively by the addition of a slight excess of potassium iodide solution. (Precipitation with hydriodic acid should not be used since it tends to form the sesquiiodide.) The solution is stirred vigorously for several minutes and allowed to stand. The yellow TlI precipitate settles quickly. A change in color of the TlI from yellow to orange to green to brown is observed when insufficient potassium iodide is used. However, the yellow color is restored after adding more potassium iodide solution and stirring.

Thallous iodide is filtered on a coarse fritted-glass funnel and washed with cold water. The wash water must be cold since TlI is considerably more soluble in hot water. After air drying on the funnel, the solid is transferred to an evaporating dish and dried on a hot plate. The material is then vacuum dried at 325°C until the yellow TlI turns a cinnabar red. This color change apparently is due to a crystal modification.

Thallium is a cumulative poison and all thallium salts are toxic causing widespread damage to the nervous system, digestive tract, and, to a lesser extent, the kidneys and circulatory system. Thallium solutions are readily absorbed through the skin and the digestive tract, and it is imperative that these materials be kept off the skin and out of the respiratory and digestive systems. Respirators, chemical safety goggles, and rubber gloves mut be worn when working with thallium or its compounds.

THALLIUM (continued)

Calutron Operational Parameters

Ion output, 20 ma/hr

Total ion current, 55 ma/hr

Process efficiency, 11.7%

Charge consumption rate, 1.33 g Tl per alpha tank hour

Natural Abundance		Stable Isobars
Sn^{112}	0.95%	Cd^{112}
Sn^{114}	0.65%	Cd^{114}
Sn^{115}	0.34%	Cd^{116}
Sn^{116}	14.24%	[a]In^{115}
Sn^{117}	7.57%	Te^{120}
Sn^{118}	24.01%	Te^{122}
Sn^{119}	8.58%	Te^{124}
Sn^{120}	32.97%	Xe^{124}
Sn^{122}	4.71%	
Sn^{124}	5.98%	

Tin dichloride and tin tetrachloride have been used in the separation of the isotopes of tin. The liquid $SnCl_4$ is the preferred charge and is supplied to the calutron from an externally located style SE stainless steel charge bottle containing 1,000 g $SnCl_4$.

Tin tetrachloride is prepared in the laboratory by reacting mossy tin metal with chlorine gas under quenched conditions in which $SnCl_4$ acts as the quenching agent. The reactor consists of a 5 cm Pyrex tube 2 m long mounted vertically and having its lower end drawn down to 1.5 cm. A gas feed side-arm is located 7.5 cm above the constriction and is connected by Tygon hose to a cylinder of chlorine. A gravity leg consisting of a 1.5 m length of 0.5 cm Tygon tubing is attached to the lower end of the reactor using a hose clamp.

A carbon disk 1.5-cm thick and of a size to fit snugly inside the reactor tube at the constriction is drilled with 20, 0.5-cm holes. This grate allows the liquid $SnCl_4$ to drain from the reactor but confines the solid tin metal above the gas inlet tube. After placing the grate in position, the reactor is two-thirds filled with mossy tin metal. Liquid $SnCl_4$, from a previous synthesis, is added to the reactor until the liquid level is at least 2 in. above the gas inlet side-arm. This quench of liquid $SnCl_4$ is necessary to dissipate the heat of reaction, otherwise localized heating would melt the tin and allow it to fall through the grate. Even with the quench solution, the flow of chlorine must be carefully adjusted to prevent melting of the tin metal. A one-hole rubber stopper fitted with a short piece of glass tubing is placed in the upper end of the reactor, and unreacted chlorine is conducted to a fume hood through an attached length of Tygon tubing.

---

[a]In^{115}, natural abundance 95.77%, is radioactive with a half-life of 6×10^{14} years.

TIN (continued)

As the reaction of chlorine with tin continues, $SnCl_4$ accumulates in the reactor causing the liquid level to rise. When the liquid level has risen by about 30 cm, removal to a storage container is effected by lowering the free end of the gravity leg. Thus the liquid in the reactor is returned periodically to its initial level as the reaction product is drawn off. Since tin can be added to the reactor as needed, and the product can be removed periodically, the process is essentially continuous.

Tin chloride vapors are irritating to the eyes and cause some intoxication. This compound hydrolyzes upon contact with moisture to form hydrogen chloride which is also corrosive and poisonous. Adequate ventilation plus the use of protective equipment including rubber gloves, safety goggles, and an adequate respirator should eliminate the hazards of working with this compound.

Calutron Operational Parameters

Ion output, 21.5 ma/hr
Total ion current, 200 ma/hr
Process efficiency, 10.5%
Charge consumption rate, 1.1 g Sn per beta tank hour

TITANIUM

Natural Abundance		Stable Isobars
Ti^{46}	7.99%	Ca^{46}
Ti^{47}	7.32%	[a]Ca^{48}
Ti^{48}	73.99%	[b]V^{50}
Ti^{49}	5.46%	Cr^{50}
Ti^{50}	5.25%	

Titanium tetrachloride is the only charge material which has been used in the separation of the isotopes of titanium. Titanium tetrachloride is procured from a commercial source and fed to the calutron from a style SE container located outside the vacuum chamber.

When exposed to atmospheric moisture or water, $TiCl_4$ hydrolyzes to form hydrogen chloride. This gas constitutes a safety hazard since it is very corrosive and poisonous, causing inflammation of the nose, throat, and upper respiratory tract. Adequate ventilation plus the use of personnel protective equipment, including rubber gloves, chemical goggles, and an adequate respirator, should eliminate the hazards associated with the handling of this material.

Calutron Operational Parameters

Ion output, 43 ma/hr
Total ion current, 280 ma/hr
Process efficiency, 12%
Charge consumption rate, 0.64 g Ti per beta tank hour

---

[a]Ca^{48}, natural abundance 0.185%, is radioactive with a half-life of $>2 \times 10^{16}$ years.

[b]V^{50}, natural abundance 0.25%, is radioactive with a half-life of 4.8×10^{14} years.

TUNGSTEN

Natural Abundance		Stable Isobars
[a]W^{180}	0.135%	Hf^{180}
W^{182}	26.4%	[b]Ta^{180}
W^{183}	14.4%	Os^{184}
W^{184}	30.6%	Os^{186}
W^{186}	28.4%	

Tungsten hexafluoride, tungsten hexachloride, tungsten hexabromide, tungsten dibromide, tungsten dioxide, tungsten dioxydichloride, and tungsten trioxide have been used as charge material in the separation of tungsten isotopes.[c] Tungsten hexachloride is the preferred charge compound from an operational standpoint. The usual charge consists of 400 g WCl_6 in a style X-5 stainless steel charge bottle.

Tungsten hexachloride is prepared in the laboratory by direct combination of the elements at an elevated temperature. It has been found that powdered tungsten metal will chlorinate at a much faster rate when platinized asbestos is used as a catalyst in the chlorination process.

Chlorination of tungsten is performed in a Pyrex tube 10 cm in diameter by 120 cm in length, which has one end open and the other constricted to a diameter of approximately 1.5 cm. A gas-scrubbing bottle containing concentrated sulfuric acid is connected with rubber tubing to the constricted end of the chlorination reactor. Approximately 500 g tungsten powder is placed on top of 15 g of 5% platinized asbestos spread over the bottom of a Pyrex boat, and the boat is then inserted into the reactor. The chlorination reactor tube is placed in an electric tube furnace in such a manner that the tungsten is in the heated zone and near the constricted end. Nitrogen gas is passed through the reactor while it is being heated to a temperature of 550°C. Any moisture condensing in the cool end of the reactor is driven out by carefully flaming the outside of the tube.

A constricting plug of glass wool is inserted into the open exhaust end of the reactor to prevent entry of atmospheric moisture. This porous plug also creates a slight back pressure which increases the efficiency of chlorination. At this point the flow of nitrogen is replaced by chlorine and the reaction allowed to continue overnight. As the tungsten hexachloride forms, it sublimes from the heated zone and collects near the cool exhaust end of the reactor. The heat is turned off the following morning and the reactor allowed to cool with a flow of nitrogen passing through it. The WCl_6 product is removed from the reactor and stored in sealed containers. Spectrographic analysis of the product indicates contamination by platinum is $<0.04\%$.

---

[a]W^{180} is radioactive with a half-life of $\sim 3 \times 10^{14}$ years.

[b]Ta^{180}, natural abundance 0.012%, is radioactive with a half-life of $> 10^7$ years.

[c]See p 5, Internal Chlorination.

Tungsten and its compounds are not considered to be industrial hazards; however, respirators should be worn when dusting occurs.

Calutron Operational Parameters

Ion output, 11.9 ma/hr
Total ion current, 170 ma/hr
Process efficiency, 4.5%
Charge consumption rate, 1.6 g W per beta tank hour

VANADIUM

Natural Abundance		Stable Isobars
$^{a}V^{50}$	0.25%	Ti^{50}
V^{51}	99.75%	Cr^{50}

Vanadium oxytrichloride and vanadium trifluoride have been used as charge material in the separation of vanadium isotopes. Vanadium trifluoride proved to be more satisfactory, and the usual charge consists of 200 g VF_3 in a style C-18 graphite charge bottle.

A method for the preparation of vanadium trifluoride without using anhydrous hydrogen fluoride or fluorine was devised to eliminate the hazards associated with handling these corrosive gases. Anhydrous VF_3 is prepared by the fusion of ammonium bifluoride with vanadium trioxide.

One mole of vanadium trioxide is mixed thoroughly with 12 moles of ammonium bifluoride. Twice the stoichiometric quantity of ammonium bifluoride is used to ensure completeness of reaction. The mixture is placed in a graphite crucible and gently heated over a gas flame. At a temperature of approximately 100°C the mixture becomes fluid and is stirred with a graphite rod containing a thermocouple. As the temperature is slowly increased to 250°C, water and excess ammonium bifluoride are driven off leaving a green solid residue of ammonium hexafluovanadate.

Thermal decomposition of ammonium hexafluovanadate is carried out by heating to 550°C while flushing continuously with nitrogen. The decomposition chamber is a nickel cylinder having a removable cover at one end. The gas inlet line passes through this cover and extends almost to the bottom of the cylinder. The short outlet tube also passes through the cover plate and is electrically heated to prevent condensation of the decomposition products being carried out by the flushing stream of nitrogen. A temperature of 550°C is maintained until white fumes are no longer observed coming from the outlet tube, and the flow of nitrogen is continued until the container is cooled to room temperature. The VF_3 produced in this manner is a fine gray-green powder and exhibits crystallographic properties normally associated with vanadium trifluoride. Contamination from the nickel container is found to be $< 0.05\%$.

A more detailed description of the VF_3 synthesis, complete with bibliography, has been published as ORNL CF-58-5-95, *Preparation of Vanadium Trifluoride by the Thermal Decomposition of Ammonium Hexafluovanadate (III)* by B. J. Sturm and C. W. Sheridan.

Vanadium and its compounds are unquestionably toxic. Both ingestion and inhalation can be prevented by good hygienic practices and the use of a respirator or fume hood with good exhaust ventilation.

---

[a] V^{50} is radioactive with a half-life of 4.8×10^{14} years.

Calutron Operational Parameters

Ion output, 40 ma/hr

Total ion current, 270 ma/hr

Process efficiency, 8.3%

Charge consumption rate, 0.86 g V per beta tank hour

YTTERBIUM

Natural Abundance		Stable Isobars
Yb^{168}	0.140%	Er^{168}
Yb^{170}	3.03%	Er^{170}
Yb^{171}	14.31%	Hf^{174}
Yb^{172}	21.82%	Hf^{176}
Yb^{173}	16.13%	[a]Lu^{176}
Yb^{174}	31.84%	
Yb^{176}	12.73%	

The only compound which has been used in the separation of ytterbium isotopes is anhydrous ytterbium trichloride. The average charge consists of 150 g $YbCl_3$ in a style C-16 graphite charge bottle.

The method of charge preparation and the recycle and recovery procedures developed for samarium are used for all rare earth elements with the exception of cerium. The rare earth techniques are described in detail only for samarium and cerium.

Calutron Operational Parameters

Ion output, 13 ma/hr
Total ion current, 80 ma/hr
Process efficiency, 12.3%
Charge consumption rate, 0.70 g Yb per beta tank hour

---

[a]Lu^{176}, natural abundance 2.6%, is radioactive with a half-life of 4.6×10^{10} years.

ZINC

Natural Abundance		Stable Isobars
Zn^{64}	48.89%	Ni^{64}
Zn^{66}	27.81%	Ge^{70}
Zn^{67}	4.11%	
Zn^{68}	18.56%	
Zn^{70}	0.62%	

Zinc metal, in the form of 10-mesh granules, is the only charge material which has been used in separating the isotopes of this element. The halides of zinc appear to be acceptable as charge material on the basis of vapor pressure requirements for source operation; however, the metal is preferred because its lower vapor pressure minimizes product contamination by un-ionized vapor, and its use eliminates undesirable extraneous ion beams. The usual charge consists of 500 g zinc metal in a style S-16 stainless steel charge bottle.

Granulated zinc metal is available from commercial sources and is loaded into the charge bottle without any pretreatment.

The main industrial hazard in the handling of zinc arises from the danger of spontaneous ignition of finely divided zinc metal and zinc residues. These zinc products should be stored in small quantities in a cool, dry, and well-ventilated area away from acute fire hazards such as open flames and powerful oxidizing agents. Since zinc is a heavy metal poison, respirators should be worn when dusting is encountered, and good hygienic practices should be employed at all times when handling the metal or its compounds.

Calutron Operational Parameters

Ion output, 40 ma/hr
Total ion current, 170 ma/hr
Process efficiency, 10.4%
Charge consumption rate, 0.89 g Zn metal per beta tank hour

ZIRCONIUM

Natural Abundance		Stable Isobars
Zr^{90}	51.46%	Mo^{92}
Zr^{91}	11.23%	Mo^{94}
Zr^{92}	17.11%	Mo^{96}
Zr^{94}	17.40%	Ru^{96}
[a]Zr^{96}	2.80%	

The only charge material which has been used in the separation of zirconium isotopes is anhydrous zirconium tetrachloride.[b] The average charge consists of 350 g $ZrCl_4$ in a style X-5 stainless steel charge bottle.

Zirconium tetrachloride is prepared by passing a mixture of chlorine gas and carbon tetrachloride vapor over zirconium oxide which is heated to a temperature of 500–550°C. Zirconium oxide in a Vycor boat is placed in a Pyrex tube 10 cm in diameter by 2 m in length. The inlet end of the tube is reduced to 5 cm and connected to a 500 ml flask which is connected to a cylinder of chlorine gas. The flask is heated with an electric heating mantle and fitted with a separatory funnel to provide a drop-by-drop feed of carbon tetrachloride. An electric tube furnace placed near the inlet end serves to heat approximately one-third of the Pyrex tube, and the whole apparatus is placed near a fume hood in such a manner that the exhaust end of the Pyrex tube projects well into the hood. This removes gaseous reaction products as well as unreacted chlorine and carbon tetrachloride.

During operation the carbon tetrachloride is dropped slowly into the heated flask, where it vaporizes and, together with chlorine gas from the cylinder, is passed over the heated zirconium oxide. As soon as $ZrCl_4$ is formed it sublimes from the hot end of the tube and collects in the cool zone as a light fluffy powder. Periodically the zirconium tetrachloride is removed from the tube and quickly transferred to sealed containers for storage.

The efficiency of the reaction is improved by stirring the zirconium oxide every hour or so to expose a fresh surface. Loosely plugging the exhaust end of the reaction tube with glass wool serves to keep atmospheric moisture from entering the tube and hydrolyzing the zirconium tetrachloride. When the reaction is complete, nitrogen is used to sweep the tube free of any unreacted chlorine. Approximately 700 g of $ZrCl_4$ per day can be prepared by this method.

Due to the relative scarcity of high purity zirconium, the unresolved charge material is recycled and recovered. The recovery of zirconium consists of washing the calutron components in nitric acid, precipitating zirconium hydroxide with ammonia, removing copper from the nitric

---

[a]Zr^{96} is radioactive with a half-life of $> 2 \times 10^{14}$ years.

[b]See p 5, Internal Chlorination.

acid solution by electrolysis, reprecipitating with ammonia, precipitating impurities from hydrochloric acid solution with hydrogen sulfide, extracting iron with diethyl ether, and finally precipitating zirconium hydroxide with ammonium hydroxide. The purified zirconium hydroxide is converted to zirconium oxide by slowly heating to 800°C.

Elemental zirconium has a low order of toxicity; however, the finely divided metal forms an explosive mixture in air. Hydrolysis of zirconium tetrachloride to form hydrogen chloride and zirconyl chloride presents a toxicity hazard. An additional hazard is phosgene which is produced by the chlorination reaction. Safe handling of zirconium tetrachloride requires the intelligent use of rubber gloves, safety glasses, and a fume hood with good exhaust ventilation.

Calutron Operational Parameters

Ion output, 16.5 ma/hr
Total ion current, 140 ma/hr
Process efficiency, 3.1%
Charge consumption rate, 2.0 g Zr per beta tank hour

ORNL-3301
UC-22 – Isotope Separation
TID-4500 (17th ed., Rev.)

INTERNAL DISTRIBUTION

1. Biology Library
2-3. Central Research Library
4. Laboratory Shift Supervisor
5. Reactor Division Library
6. ORNL – Y-12 Technical Library Document Reference Section
7-26. Laboratory Records Department
27. Laboratory Records, ORNL R.C.
28. E. H. Acree
29. P. A. Agron
30. P. S. Baker
31. R. Baldock
32. E. E. Beauchamp
33. D. S. Billington
34. T. A. Butler
35. A. D. Callihan
36. A. E. Cameron
37. F. N. Case
38. J. W. Cleland
39. F. L. Culler
40. W. C. Davis
41. J. H. Gillette
42. W. Y. Gissell
43. R. N. Goslin
44. H. R. Gwinn
45. W. D. Harmon
46. R. G. Jordan (Y-12)
47. M. T. Kelley
48. C. E. Larson
49. S. A. Levin (K-25)
50. T. A. Lincoln
51-60. L. O. Love
61. H. F. McDuffie
62. F. K. McGowan
63. J. D. McLendon (K-25)
64. J. P. Murray (K-25)
65. C. E. Normand, Sr.
66. J. A. Norris
67. G. L. Regosa
68. A. F. Rupp
69-78. C. W. Sheridan
79. J. R. Sites
80. M. J. Skinner
81. A. H. Snell
82. K. A. Spainhour
83. E. J. Spitzer
84. G. A. Strasser (Y-12)
85. J. A. Swartout
86. E. H. Taylor
87. B. Weaver
88. A. M. Weinberg
89. R. D. Williams (Y-12)
90. J. O. Younghanse

EXTERNAL DISTRIBUTION

91. T. R. Jones, Division of Research, AEC, Washington
92. P. W. McDaniel, Atomic Energy Commission, Washington
93. A. O. C. Nier, University of Minnesota
94. Division of Research and Development, AEC, ORO
95-586. Given distribution as shown in TUD-4500 (17th ed., Rev.) under Isotope Separation category (75 copies – OTS)