MARTIN MARIETTA ENERGY SYSTEMS LIBRARIES
3 4456 0361386 4

CENTRAL RESEARCH LIBRARY
DOCUMENT COLLECTION

ORNL-2752
UC-80 – Reactor Technology
TID-4500 (17th ed.)

PRELIMINARY DESIGNS FOR FOUR INTEGRATED GAS-COOLED CERAMIC-FUELED AND -MODERATED REACTOR CORE AND STEAM GENERATOR UNITS

A. P. Fraas

CENTRAL RESEARCH LIBRARY
DOCUMENT COLLECTION
LIBRARY LOAN COPY
DO NOT TRANSFER TO ANOTHER PERSON
If you wish someone else to see this document, send in name with document and the library will arrange a loan.

OAK RIDGE NATIONAL LABORATORY
operated by
UNION CARBIDE CORPORATION
for the
U.S. ATOMIC ENERGY COMMISSION

Printed in USA. Price $2.75. Available from the

Office of Technical Services
U. S. Department of Commerce
Washington 25, D. C.

LEGAL NOTICE

This report was prepared as an account of Government sponsored work. Neither the United States, nor the Commission, nor any person acting on behalf of the Commission:

A. Makes any warranty or representation, express or implied, with respect to the accuracy, completeness, or usefulness of the information contained in this report, or that the use of any information, apparatus, method, or process disclosed in this report may not infringe privately owned rights; or

B. Assumes any liabilities with respect to the use of, or for damages resulting from the use of any information, apparatus, method, or process disclosed in this report.

As used in the above, "person acting on behalf of the Commission" includes any employee or contractor of the Commission to the extent that such employee or contractor prepares, handles or distributes, or provides access to, any information pursuant to his employment or contract with the Commission.

ORNL-2752

UC-80 – Reactor Technology
TID-4500 (17th ed.)

Contract No. W-7405-eng-26

Reactor Division

PRELIMINARY DESIGNS FOR FOUR INTEGRATED GAS-COOLED CERAMIC-FUELED AND -MODERATED REACTOR CORE AND STEAM GENERATOR UNITS

A. P. Fraas

DATE ISSUED

NOV 2 3 1962

OAK RIDGE NATIONAL LABORATORY
Oak Ridge, Tennessee
operated by
UNION CARBIDE CORPORATION
for the
U. S. ATOMIC ENERGY COMMISSION

LIBRARIES

3 4456 0361386 4

CONTENTS

		Page
1.	INTRODUCTION	1
2.	SUMMARY AND CONCLUSIONS	3
3.	GENERAL DESIGN CONSIDERATIONS	16
	The Contamination Problem	16
	Design Precepts	18
4.	THE HGCR-2 GRAPHITE-MODERATED CORE AND STEAM GENERATOR UNIT	23
	General Layout	23
	Steam Generator	28
	Pressure Vessel	32
	Main Coolant Blowers	33
	Fuel-Handling Equipment	34
	Shielding	35
	Containment Shell	35
5.	THE HGCR-3 BeO-MODERATED CORE AND STEAM GENERATOR UNIT	36
	Gas System Pressure and Temperature	36
	Reactor Core	40
	Fuel Element	44
	Steam Generator	47
	Pressure Vessel	55
	Blowers	56
6.	THE HGCR-4 BeO-MODERATED AND HGCR-5 GRAPHITE-MODERATED REACTOR AND STEAM GENERATOR UNIT	60
	Selection of Core Size	61
	Moderator Structure	67
	Control Rods and Drives	70
	Selection of System Pressure	71
	Blowers	73
	Steam Generator	73
	Configuration	74

Design Analysis 75
Hot Spot Problems 76
Designs for Higher Temperatures 78
Fuel-Handling and Core-Servicing System 79
Design Requirements 79
Design Precepts 86
Proposed System 88
Ram 91
Drives for Operators 96
Charge Head 96
Head for Shield Plug Removal 101
Servicing Heads 102
The Jamming Problem with the Shield Plug Open 102
7. LAYOUT OF THE HGCR-5 REACTOR BUILDING 104
Hot Cells 104
Building Compartmentalization 107
Storage Tank Regions 107
Mezzanine 108
Ground Floor 109
Helium Transfer, Storage, and Purification System 110
8. HAZARD PROBLEMS 115
Major Accidents 115
Routine Hazards 123
9. MAINTENANCE 128
10. COST STUDY 133
HGCR-5 Cost Estimate 133
Comparison with Pressurized- and Boiling-Water Reactors ... 146
REFERENCES 150

1. INTRODUCTION

Gas-cooled reactors utilizing all-ceramic fuels have been under consideration at ORNL since the inception of the gas-cooled reactor program in 1957. In comparison with the GCR-2 and the EGCR, which utilize stainless-steel-clad fuel,[1] the ceramic-fueled reactors should give much higher conversion ratios and power densities, and, consequently, lower capital charges. A study of the problems involved in operating a ceramic-fueled reactor with a contaminated cooling gas system was initiated early in 1958.

The first step was a preliminary design study[2] of a GCR-2 reactor modified to incorporate ceramic fuel elements. The study of this reactor, the HGCR-1, implied that the fission-product release to the cooling gas stream would not be so great as to make the maintenance problems unmanageable for a helium-cooled graphite-moderated reactor with graphite-contained UO_2 fuel elements. The costs relative to those of the GCR-2 indicated, however, that it would be well to depart from the Calder Hall type of reactor core and steam generator configuration in order to reduce the size and cost of such items as the pressure envelope, the shielding, and the containment shell.

Small reactor core studies[3] made at ORNL during 1958 indicated that a new and improved heat exchanger design should be evolved for small high-pressure gas-cooled reactor cores. These studies also indicated that small BeO-moderated reactors should be considered in order to take advantage of the (n,2n) reaction and thus improve the conversion ratio (and possibly even permit breeding).

Accordingly, two designs were prepared to see to what extent costs might be reduced by incorporating the reactor core and steam generator in a single pressure vessel and exploiting the high-temperature capabilities of ceramic fuel elements. The first of these designs employed the same basic reactor core and heat exchanger tube matrix as that used in the GCR-2. The second of the designs made use of a small BeO-moderated core cooled with CO_2 at 1000 psi and a new axial-tube steam generator.

Both plants were designed to operate with less than 0.1% of the fission products leaking from the fuel elements into the cooling gas.

This work was reported briefly in a quarterly progress report,[4] and a draft of a report covering these two designs was prepared in May 1959. The latter was withheld from publication until a series of studies could be carried out to determine the influence of various parameters on the reactor physics, fuel cycle costs, the steam generator, and the fuel-handling and servicing equipment. The evaluation of the effects of parameter variations on the first three of these factors entailed fairly straightforward though tedious parametric studies, but the studies of the fuel-handling and reactor servicing equipment presented a whole series of basic feasibility questions. The results of these studies indicated the desirability of extensive modifications to the layout proposed for the BeO-moderated reactor. Consequently, two additional designs were prepared, one for a BeO-moderated reactor and one for a graphite-moderated reactor, to facilitate a comparison of the two moderating materials applied to the same system configuration. The draft report was then revised and extended to include the two additional designs and the analyses of their merits presented herein.

2. SUMMARY AND CONCLUSIONS

A new plant configuration has been developed that appears to be much superior to that used for the GCR-2 and HGCR-1 plants, which were based on the British Calder Hall and large CEA reactor plant layouts. Combining the reactor core and steam generator in a common pressure vessel to give a single functional unit yields major reductions in the cost of the pressure envelope, the ducts, the shield, and the nuclear plant containment vessel. The hot gas ducts and their expansion bellows are eliminated, and the pressure envelope is maintained at a uniform safe temperature without special blowers for the pressure envelope cooling system. The higher temperature differences available with all-ceramic fuel elements, together with a new axial-tube steam generator, result in significant reductions in the capital costs of both the core and the steam generator. The proposed design gives low pumping losses and excellent thermal convection for afterheat removal, and the control and hazards problems appear to be manageable.

The new approach taken in the design of the fuel-handling equipment should drastically reduce both the cost of the equipment and the time required for the fuel-handling operations. Further, the elimination of the burst-slug detection system, which would not be needed in these systems, means additional capital, operational, and maintenance cost reductions. It is possible that the saving thus effected would largely offset the added costs of instrumentation for the detection of leaks from the contaminated gas system and the added costs associated with maintenance of the contaminated blowers and the fuel-handling machine.

Steam turbine drives for the blowers appear to be better than electric motors for the proposed reactors, because they would permit reductions, not only in the cost of the drives, but also in containment vessel size and cost. They would also give improvements in operating costs and reliability.

In comparing graphite and BeO as basic structural materials for all-ceramic reactors, it appears that the plant layout proposed is well-suited to the use of either material and that the capital costs would be

much the same. For a good balance between capital charges and fuel cycle costs, a BeO-moderated core fitted with $BeO-UO_2-ThO_2$ fuel elements entails a somewhat smaller, higher power-density reactor that utilizes a higher cooling-gas pressure. The consequent reductions in the capital costs for the core, heat exchanger, shield, and containment vessel largely offset the higher initial cost per kilowatt of the BeO.

Modern steam power plant experience indicates that capital charges increase rapidly if steam temperatures are increased above about 1050°F because of the added costs and difficulties associated with high-alloy-steel construction. This also appears to hold for the steam generators of gas-cooled reactors. Further, the adverse effects on fission-product release from the fuel of increasing fuel temperatures above about 1800°F, coupled with hazards considerations, including system stability and control, favor limiting the reactor gas outlet temperature to about 1250°F. In the balance it appears that a 1050°F steam temperature and a 1250°F peak gas temperature give a well-proportioned plant.

Since the proposed nuclear plants have been designed to produce steam at the temperature and pressure conditions ordinarily employed in the latest steam plants, capital cost comparisons can be made by focusing attention solely on the steam-raising portion of the power plant. Following this approach, Table 1 has been prepared to give a quantitative comparison of the principal factors affecting capital costs for the new proposed designs, the GCR-2, the HGCR-1, and a typical, modern, coal-fired plant. The reactor designs listed in Table 1 are illustrated in Fig. 1.

The large reductions in the size of the reactor plant effected in the course of the study and the consequent reduction in the weight of steel and volume of concrete required per kilowatt of electrical output are evident in Table 1. It may also be seen that the HGCR-4 and the HGCR-5 require less than one-third as much building ground floor area and less than one-fourth as much steel per kilowatt of capacity as one of the most modern coal-fired steam plants. This comparison implies that it may be possible to build a large gas-cooled all-ceramic-fueled and -moderated reactor plant for less than the cost of a coal-fired plant.

Table 1. Summary of Factors Affecting Capital Costs of Power Plants

Reactor designation	GCR-2	HGCR-1	HGCR-2	HGCR-3	HGCR-4	HGCR-5	
Description	Reference design (see ref. 1)	GCR-2 with shielding for steam generator	GCR-2 core and steam generator in a single vessel	BeO-moderated core and steam generator in a single vessel	BeO-moderated core and steam generator in a single vessel	Graphite-moderated core and steam generator in a single vessel	A typical coal-fired steam plant
Activity in gas system, curies	10^2	10^7	10^6	10^6	10^6	10^6	
Net electrical power output, Mw	225	1130	468	464	500	500	465
Steam temperature to turbine, °F	950	1050	950	1050	1050	1050	1050
Steam pressure to turbine, psia	950	1450	950	2400	2400	2400	2400
Specific thermal power in fuel, kw/kg of U^{235}	228	1810	456	10 000	4000	3000	
Thermal power density in core, kw/liter	1.716	7.72	3.43	97.8	32.4	23.3	
Thermal power density in steam generator, kw/liter	0.725	2.05	1.45	2.58	4.17	3.92	0.161
Weight of steel in reactor coolant system pressure envelope and support structure, lb/kw of electricity	19.4	6.5	6.0	1.9	2.05	2.36	
Weight of steel in steam generator tubes, lb/kw of electricity	8.0	3.2	3.85	1.93	0.49	0.44	9.1
Weight of steel in containment shell, lb/kw of electricity	0	5.6	6.4	6.4	4.4	4.4	
Total weight of steel required for steam generation, lb/kw of electricity	27.8	15.5	16.4	10.4	8.0	8.2	30
Volume of concrete in shield, yd^3/kw of electricity	0.053	0.0228	0.015	0.011	0.03	0.03	
Building height above ground, ft	90	155	142	142	108	108	126
Building depth below ground, ft	35	65	70	70	68	68	34
Building cross-sectional area, ft^2	14 440	39 000	15 400	15 400	10 000	10 000	35 000

UNCLASSIFIED
ORNL-LR-DWG 62742

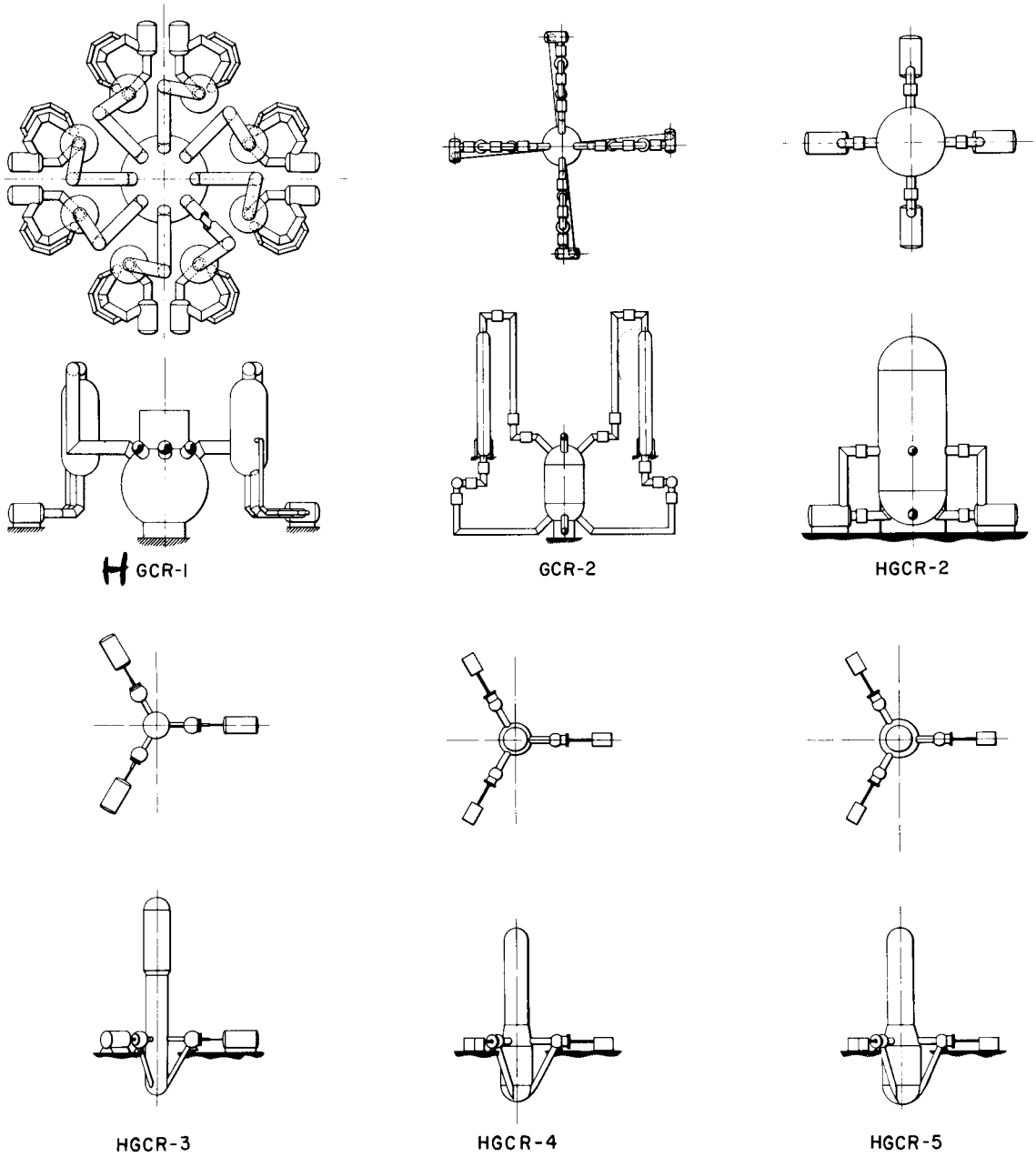

Fig. 1. Designs Described in Table 1.

More detailed dimensional and performance data for the nuclear plants are presented in Table 2. All six reactor designs described entail about equal degrees of optimism or conservatism from the mechanical, heat transfer, and fluid flow standpoints, except for the question of the feasibility of operation with a contaminated coolant system.

The information available at the time of writing is not sufficient to permit a good estimate of either fabrication or reprocessing costs for the fuel. Since both factors will depend on the measures taken to minimize fission-product release, it is important to determine in an all-ceramic gas-cooled reactor experiment the extent to which the fission-product escape rate from the fuel will affect the reactor operating and maintenance costs.

Table 2. Dimensional and Performance Data for a Series of Gas-Cooled Reactor Designs

Reactor Designation	GCR-2	HGCR-1	HGCR-2	HGCR-3	HGCR-4	HGCR-5
Reactor thermal output, Btu/hr	2.34×10^9	10.57×10^9	4.69×10^9	3.86×10^9	4.0×10^9	4.0×10^9
Reactor thermal power output, Mw	687	3095	1374	1130	1170	1170
Gross electrical output, Mw	252	1256	504	500	500	500
Net electrical output, Mw	225	1130	468	464	500	500[a]
Net over-all efficiency, %	32.8	36.5	34.1	41.0	42.7	42.7
Reactor Core						
Moderator and reflector material	TSF-grade graphite	Graphite	TSF-grade graphite	BeO	BeO	Graphite
Nominal core height, ft	20	20	20	10	10	10
Nominal core diameter, ft	30	30	30	7.7	12.5	15
Height of core plus reflector, ft	25	25	25	13	13	16
Diameter of core plus reflector, ft	35		35	10	15.3	20
Moderator density, g/cm^3	1.65	1.65	1.65	2.7	2.7	1.65
Moderator volume, ft^3	21 784	21 784	21 784	1000	2400	5550
Core volume, ft^3					1229	1770
Core power density, w/cm^3					32.4	23.3
Weight of moderator, tons	1122 (735 in core)	1122	1122 (735 in core)	65	175	220
Number of fuel channels	1597	1415	1597	1938	4850	5040
Number of fuel charge tubes	69		69	7	1	1
Pitch of channels, in.	8	8 1/2	8	2	2	2.25
Type of pitch	Square	Square	Square	Equilateral	Equilateral	Equilateral
Diameter of fuel channels, in.	345 at 3.45, 400 at 3.25, 852 at 3.05	4.5 × 4.5 square	345 at 4.0, 400 at 3.8, 852 at 3.6	1.34	1.20	1.51
Core void fraction				0.25	0.25	0.295
Core cross-sectional area, ft^2					122.9	177
Core flow passage area, ft^2					30.7	44.2
Core coolant flow rate, $lb/sec \cdot ft^2$					227	36.6
Core coolant velocity, ft/sec					121	268
Dynamic head, psi					3.0	1.87

[a]The plant electrical power consumption is very small because both the feedwater pumps and the gas circulating blowers are driven by steam turbines.

Table 2 (continued)

Fuel Element						
Slug outside diameter, in.	0.75 ± 0.005	0.372 × 4.5	3.9	0.875	0.80	1.1
Slug inside diameter, in.	0.32 ± 0.010		1.5	0.625	0.60	0.70
Slug length, in.	0.50 ± 0.003		24	10	10	12
Maximum slug internal temperature, °F	2200	~2095	1680	1945	2050	1900
Slug thermal stress (for ideal rigid body), psi	150 000	200	30	8000	3000	125
Slug surface						
ft^2/linear ft	0.2094	3	2.12	0.51	0.366	0.47
ft^2/reactor	45 050	84 900	67 500	9880	17 770	23 700
Approximate slug average surface temperature, °F	1000		1350	1600	1500	1000
Slug maximum design surface temperature in hot zone, °F	1200	2000	1660	1850	2000	1800
Slug maximum allowable surface temperature (including hot spots), °F	1500		2500	2500	2500	2400
Number of slugs per reactor	67 074	56 600 plates	15 970	23 250	58 200	50 400
Number of elements per channel	6	10	10	12	12	10
Average power density in fuel element, w/cm^3	45.9	82.5	15.3	1000	537	208
Average surface heat flux, $Btu/hr \cdot ft^2$	52 000	124 400	69 400	455 000	225 000	169 000
Heat transfer coefficient, $Btu/hr \cdot ft^2 \cdot °F$					490	475
Average surface temperature difference, °F					460	356
Pressure Vessel						
Shape	Sphere	Sphere	Cylinder	Cylinder	Cylinder	Cylinder
Outside diameter, ft	50	50	38	10.7	18	22
Material	SA212, grade B steel	Same	Same	Same	Same	Same
Vessel height, ft	5		108	122	102	99
Thickness, in.	3.250	3.25	4.5	4	4.0	4.0

Table 2 (continued)

Working pressure, psig	300	300	300	1000	625	500
Design stress, psi	16 000	16 000	16 000	16 000	16 000	16 000
Maximum temperature, °F	650	650	650	650	650	650
Volume, ft^3	63 333	63 333	93 300	2725	8300	13 000
Weight of core support structure, lb	144 000	144 000	144 000	12 000	40 000	60 000
Weight of vessel support structure, lb	38 000	38 000	64 000	10 000	100 000	120 000
Gross vessel weight (including vessel and core supports, thermal barriers, nozzles, and insulation), lb	1 541 000	1 541 000	2 425 000	880 000	1 025 000	1 180 000
Coolant						
Gas	He	He	He	CO_2	CO_2	He
Working pressure, psia	300	300	300	1000	640	515
Normal total flow, lb/sec	972	2400	1972	5430	6970	1530
Reactor inlet temperature, °F	460	525	480	665	665	665
Reactor outlet temperature, °F	1000	1500	1220	1350	1250	1250
Density at blower inlet, lb/ft^3					2.37	0.1736
Mean density in core, lb/ft^3					1.87	0.137
Number of inlet pipes	4	8	4	3	3	3
Number of outlet pipes	4	8 (concentric)	4	3	3	3
Inside diameter of pipe, ft	5	5	6	2.5	3	4
Mean coolant velocity, ft/sec						
Cool pipe	100		100	100	137	235
Hot pipe	161		100	130		
Total volume occupied by coolant, ft^3	107 000	190 000	72 000	9900	16 500	22 000
Circuit pressure drop, psi	6.61	12.6	6.6	65	40	14
Specific heat capacity of coolant, Btu/lb·°F	1.24	1.24	1.24	0.276	0.272	1.24
Coolant Blowers						
Type	Axial	Axial	Axial	Centrifugal	Axial	Axial
Number per reactor	4	8	4	3	3	3

Table 2 (continued)

Number per steam generator	1	1	4	3	3	3
Adiabatic efficiency, %	80	80	80	80	80	75
Compression power, Bhp	5700	9000	5600	11 600	5600	40 000
Speed (constant), rpm	3580	3600	3580	1750	4200	
Power for all blowers, Mw	18.3	53.7	18	26.8	15	30
Blower drive motor power, Bhp (each)	6000	9000	6000	12 000	7000	13 400
Steam Generator						
Type of generator	Once-through	Once-through	Once-through	Once-through	Once-through	Once-through
Number per reactor	4	8	1	1	1	1
Shell height between heads, ft	40	34			52	49
Shell height including heads, ft	60	54			66	61
Shell inside diameter, ft	20	21.5	37	10, 13	14	15
Shell thickness, in.	2.75	~2.95	4	4, 5.5	3.37	3.62
Gas inlet inside diameter, ft	5.0			5.0	12.0	13
Gas outlet inside diameter, ft	5.0		6	2.5	2.5	4
Steam outlet drums						
Number	4	8	6	3	12	12
Length, ft	21.5	21.5	10	10	3	3
Outside diameter, in.	28	28	30	36	16	16
Wall thickness, in.	1.875	1.875	2	4	4	4
Total weight, lb					22 000	22 000
Feedwater inlet drums						
Number	4	8	6	3	12	12
Length, ft	19.5	19.5	10	10	10	3
Outside diameter, in.	28	28	30	32	32	10
Wall thickness, in.	1	1	1.25	2.5	2.5	2
Weight, lb					6000	6000
Reheater inlet drums						
Number	4	8	6	3	12	12
Length, ft					3	3

Table 2 (continued)

Outside diameter, in.					12	12
Wall thickness, in.					1	1
Weight, lb					4000	4000
Reheater outlet drums						
Number	4	8	6	3	12	12
Length, ft					3	3
Outside diameter, in.					12	12
Wall thickness, in.					1	1
Weight, lb					4000	4000
Gas inlet temperature, °F	1000	1500	1220	1350	1250	1250
Gas outlet temperature, °F	450	525	470	650	650	650
Feedwater inlet temperature, °F	325	445	325	520	520	520
Feedwater pressure, psia	1020	1688	1020	2450	2450	2450
Feedwater enthalpy, Btu/lb	297.1	464	297.1	510.5	510.5	510.5
Steam outlet temperature, °F	950	1050	950	1050	1050	1050
Steam outlet pressure, psia	950	1450	950	2400	2400	2400
Steam outlet superheat, °F	411.6	458	411.6	385	385	385
Requirements per Steam Generator						
Number of tubes per generator (primary)	82	82	468	4800	5190	5190
Gas flow, lb/sec	243	300		5600	6700	1530
Feedwater flow, lb/hr	505 000	1 225 000	4 040 000	3 429 600	3 640 000	3 640 000
Heat removed from gas, Mw	175	387	1410	1100	1200	1200
Volume with flowing gas, ft^3	10 600		40 000	7500	9200	10 000
Volume with stagnant gas, ft^3	3800				400	400
Total weight of gas (operating), tons	0.68					
Economizer section						
Number of tubes						5190
Tube outside diameter, in.	1.50	1.5	1.50	0.825	0.50	0.50
Tube wall thickness, in.	0.120		0.120	0.100	0.050	0.050

Table 2 (continued)

Fin outside diameter, in.	2.50	2.5	2.50	1.31		
Fin thickness, in.	0.040	0.372	0.040	0.040		
Fins per foot	105.6	105.6	105.6	32 (axial)		
Average tube element length, ft	321			21.4		33
Total tubing length, ft	26 300	26 820	26 300	102 800	174 000	157 000
Outside area, ft^2	122 000	130 000	122 000	130 000	22 800	20 600
Inside area, ft^2	8280	8440	8280	16 800	18 300	16 400
Evaporator section						
Tube outside diameter, in.	1.75	1.75	1.75	0.825	0.50	0.50
Tube wall thickness, in.	0.135		0.135	0.100	0.050	0.050
Fin outside diameter, in.	2.50	2.5	2.50	1.31		
Fin thickness, in.	0.040	0.04	0.040	0.040		
Fins per foot	105.6	105.6	105.6	32 (axial)		
Average tube element length, ft	358		358	15.7	32	29
Total tubing length, ft	29 400	22 830	29 400	75 400	164 000	148 000
Outside area, ft^2	112 700	90 000	112 700	85 000	21 500	19 400
Inside area, ft^2	11 580	9000	11 580	12 400	17 200	15 600
Superheater section						
Tube outside diameter, in.	2.375	2.375	2.375	0.825	0.60	0.60
Tube wall thickness, in.	0.250		0.250	0.100	0.100	0.100
Fin outside diameter, in.				1.32		
Fin thickness, in.				0.040		
Fins per foot				32 (axial)		
Average tube element length, ft	328		328	43.6	28	25
Total tubing length, ft	26 900	16 100	26 900	209 000	143 000	130 000
Outside area, ft^2	15 570	10 000	15 570	274 000	22 200	20 000
Inside area, ft^2	12 400	7420	12 400	34 300	14 800	13 300
Reheater section						
Number of tubes				900	1920	1920
Tube outside diameter, in.				1.55	1.0	1.0

Table 2 (continued)

Tube wall thickness, in.				0.15	0.10	0.10
Fin outside diameter, in.				2.0		
Fin thickness, in.				0.040		
Fins per foot				36		
Average tube element length, ft				41.6	47	42
Total tubing length, ft				37 000	90 000	81 000
Outside area, ft^2				100 000	23 600	21 300
Inside area, ft^2				12 300	18 900	17 100
Total outside area, ft^2	250 500	230 000		592 000	89 100	81 000
Total inside area, ft^2	32 300	24 860		76 000	67 000	66 600
Total length of tubing, ft	82 600	65 750		425 000	567 000	516 000
Total length of tubing per reactor, ft	330 400	526 000	330 400	425 000	567 000	516 000
Total weight of tubing per reactor, lb	1 800 000	2 870 000	1 800 000	795 000	243 000	221 000
Shielding						
Biological shield material	Concrete	Concrete	Concrete	Concrete	Concrete	Concrete
Biological shield thickness, ft	9	6 1/2, 3 1/2	9	9	9	9
Biological shield density, lb/ft^3	145	145	145	145	145	145
Biological shield shape	Octagon	Cylinder	Decagon	Hexagon	Hexagon	Hexagon
Biological shield distance across flats, ft	76	65, diam	48	34	42	46
Biological shield height, ft	67		130	178	115	114
Total volume, yd	12 000	25 800	7000	5200	13 000	14 000
Total weight on foundation, tons	23 400	50 000	13 700	10 000	25 000	27 300
Coolant	Air	Air	Air	Air	Air	Air
Containment Vessel						
Volume of coolant gas at 20 psig, ft^3	960 000	1 620 000	616 000	287 000	300 000	320 000
Volume of steam from one segment of steam system at 20 psig, ft^3	95 000	190 000	65 000	50 000	12 000	12 000
Gross containment vessel volume, ft^3		5 630 000	2 550 000	2 550 000	1 500 000	1 500 000

Table 2 (continued)

Containment vessel height, ft	220	214	214	179	179
Containment vessel diameter, ft	220	140	140	114	114
Containment vessel shape	Sphere	Cylinder with spherical top and elliptical bottom	Cylinder with spherical top and elliptical bottom	Cylinder with spherical top and elliptical bottom	Cylinder with spherical top and elliptical bottom
Containment vessel vertical wall thickness, in.	1.0	0.94	0.95	0.75	0.75
Containment vessel dome thickness, in.	1.0	0.56	0.56	0.50	0.50
Containment vessel weight, lb	6 340 000	3 000 000	3 000 000	2 200 000	2 200 000
Pressure in vessel after release of reactor cooling gas, psig		9.0	4.4	10	11
Pressure in vessel after release of reactor cooling gas and half of steam, psig		10.0	5.3	10	11

3. GENERAL DESIGN CONSIDERATIONS

The Contamination Problem

The earlier HGCR-1 study[2] of a graphite-moderated gas-cooled reactor employing ceramic fuel elements that would give a contaminated-gas system dealt primarily with the amount and nature of the contamination in the cooling gas and possible methods for coping with the associated problems. For purposes of that report, the GCR-2 design was taken essentially as it was, except that shielding was provided around the steam generators and blowers, and a containment vessel was added because of the greater hazards associated with a gas leak from the contaminated-gas system. As soon as layout drawings and cost estimates were made, it was evident that new arrangements should be devised to reduce the size and cost of the major components, particularly the steam generators, the shield, and the containment vessel. Three such gas-cooled reactor and containment vessel configurations, expressly designed for operation with ceramic fuel elements and the associated fission-product activity in the cooling gas, have therefore been evolved and are presented here.

In the HGCR-1 study the release of fission-product activity to the gas stream was estimated on the basis that the fuel element would consist of 200-μ-diam particles of UO_2 dispersed in a matrix having a permeability equal to that of reactor-grade graphite. The analysis disclosed that the bulk of the activity leaking from the fuel elements came from fission fragments recoiling directly into the graphite. The diffusion of fission products through the UO_2 crystal lattice was so slow that, by comparison, the activity escaping from the UO_2 in that fashion was negligible. Thus it appeared that substantially lower fission-product escape rates from a ceramic fuel element could be achieved through the use of larger UO_2 particles, a less permeable matrix, or an impermeable coating surrounding the individual fuel particles or the entire fuel element. Recent tests indicate that fuel particles in the form of 200-μ-diam spheres can be coated with Al_2O_3, BeO, or pyrolytic graphite to effect a large reduction in the fission-product activity escape rate.[5]

The data evolved in the HGCR-1 study indicated that the activity level in the blowers would be uncomfortably high for maintenance, but, if the percentage of fission products escaping to the cooling gas stream could be reduced by a factor of 10, the maintenance problem would be much improved. In this preliminary design study, it was considered that it would be reasonable to assume that means could be found to reduce the escape of fission-product activity to one-tenth of that estimated in the HGCR-1 study for uncoated 200-μ-diam UO_2 particles in uncoated reactor-grade graphite. This reduced activity level is roughly 10 000 times that anticipated for the GCR-2 design, and yet it gives a residual activity after emptying the system which is much lower than that in aqueous homogeneous reactors, which have been maintained quite successfully. The consequences of this level of activity are that the heat exchanger and blowers must be shielded during operation, but one day after shutdown with the gas removed from the system the gamma dose a few feet from a blower should be only about 1 r/hr.

The reduced estimate has such vital implications that some further discussion is in order. If the activity release to the coolant gas is 10% of the HGCR-1 value, approximately 1 000 000 curies will enter the gas stream, about half of which will plate out on the lower temperature surfaces. In the system proposed, the shell-side surface area of the steam generators will be of the order of 100 000 ft^2, while the surface area in each blower will be around 300 ft^2, or about 0.3% of the steam generator surface area. This compares with a fuel element surface area of 25 000 ft^2 and a moderator surface area of the order of 100 000 ft^2, of which approximately 35 000 ft^2 is on the surface of high-velocity gas channels and the balance is in the cracks between the stacked moderator blocks. Since the bulk of the activity can be expected to plate out either in the core or on the hot or cold surfaces in the steam generator before reaching the blowers,[6] the deposits in the blowers ought to be no more than 10% as great per unit of area as the average for the steam generator. Thus it would be expected that, of the total fission-product activity entering the gas stream which could deposit on surfaces, only about 0.03% would deposit in each blower. The above reasoning indicates

that the amount of activity deposited per blower would be of the order of 300 curies. With a steel blower wall thickness of 2 in. and a diameter of the order of 6 ft, the radiation dose a few feet away from a blower would be of the order of 10 r/hr. Thus a man could work in the vicinity of a blower for only about 1 min before getting the maximum allowable weekly dose for normal operations. These estimates are summarized in Table 3, which also includes similar estimates for both higher and lower amounts of gas contamination.

Table 3. Estimated Gamma Activity Distribution in the HGCR-3 Gas System[a]

Assumed gamma activity release, %	1	0.1	0.01
Total gamma activity released, curies	10^7	10^6	10^5
Activity deposited on blower rotor assembly (60 ft^2), curies	300	30	3
Activity deposited in blower and housing (300 ft^2), curies	3000	300	30
Dose outside blower at 3 ft with 2-in. steel case closed, r/hr	100	10	1
Dose from blower rotor at 3 ft with case open, r/hr	500	50	5
Activity in steam generator, curies/ft^2 of surface	100	10	1
Activity in steam generator, curies/meter of length	2×10^5	2×10^4	2×10^3
Dose to steam generator wall, gammas/cm^2	6×10^9	6×10^8	6×10^7
Dose to steam generator wall, r/hr	30 000	3000	300
Dose outside top of steam generator at at contact, r/hr	1000	100	10
Dose outside 4-ft concrete shield, mr/hr	3	0.3	0.03

[a]One day after shutdown from operation at 1200 Mw, the total gamma activity, based on 1 curie/watt, would be roughly 10^9 curies.

Design Precepts

Before attempting to develop a new plant configuration a critical review was made of GCR-2, HGCR-1, and other ORNL conceptual designs,

together with the British Calder Hall and large CEA plant designs. The good features and shortcomings of each layout were carefully noted, particularly those affecting costs, reliability, maintenance, and hazards considerations. A set of design precepts was evolved from this study to serve as a guide for the generation of new designs and as a set of criteria to aid in evaluating their relative merits. These design precepts are the following:

1. The primary pressure envelope should be designed for an exceptionally high degree of integrity.

(a) The pressure envelope should be maintained at reactor gas inlet temperature.

(b) The mounting should accommodate thermal expansion without requiring bellows joints.

(c) The mounting should accommodate lateral accelerations of 0.25 g (from seismic loads).

(d) The mounting should minimize vibration excitation by unbalanced rotors in the blowers.

2. The number of flanged joints should be kept to a minimum, and those used should be in cool zones where the radiation dose would be less than 10^5 r/yr.

3. The system should provide for removal of afterheat by thermal convection.

4. The core support structure should be at the reactor inlet gas temperature, and should locate the moderator blocks so that the passages for the control rods and fuel elements will not be adversely affected by differential thermal expansion, moderator shrinkage or distortion under irradiation, or seismic forces.

5. The moderator should be accessible for inspection, maintenance, and replacement.

6. The control rods and drives should be accessible for installation or removal by contact maintenance techniques, but provisions should also be made so that they could be replaced using remote-handling equipment.

7. The fuel-handling system should be as simple as possible, and all components should be accessible for inspection, maintenance, or replacement.

8. The blowers should be shielded and accessible for contact maintenance, but provisions should be made for replacement by remote-handling techniques.

9. Leaks in steam generator tubes should be repairable by blocking off tubes at the steam header drums, and these should be located in a shielded region to permit contact maintenance.

10. The steam generator should be of the once-through type with provisions for good water flow stability and good drainage.

11. There should be good access to all components by overhead crane.

12. The reactor system layout should minimize the size and complexity of the shield insofar as possible without interfering with maintenance operations.

13. Hot cells should be provided both for inspecting fuel elements and for inspecting and maintaining equipment.

14. The reactor plant should be enclosed within a pressure-tight, vertical, cylindrical containment shell with hemispherical or ellipsoidal heads.

The hazards problems implied by the gas-born activity estimates of the previous section make an exceptionally high degree of pressure vessel integrity absolutely essential. Ease of maintenance in spite of the high activity levels is also essential. Except for work on the reactor core and related structure, it appears that it should be possible to carry out practically all normal maintenance work by direct access to the equipment without subjecting personnel to dose rates of more than 200 mr/hr. Provision should, of course, be made to carry out virtually all work from outside the shield at a low dose level; but in the event of unforeseen difficulties, contact maintenance should be possible.

It should be possible to repair a leak in a steam generator by blocking off the leaking tube rather than by replacing it. This is conventional steam plant practice and seems to be particularly appropriate for this application, since experience indicates that boiler tube failures are usually caused by hot spots resulting from vagaries in combustion gas temperature distribution or in water flow distribution. In the type of unit contemplated, such hot spots can be avoided, and hence tube failures

should be extremely rare. The loss in plant performance from a few blocked-off tubes would be small. Not a single tube failure at Calder Hall and Chapel Cross has been reported to date with a total of 60 heat exchanger operating years of experience, and no provision for replacing steam generator tubes is contemplated for the EGCR or for any of the British gas-cooled reactor plants for which designs are available. It appears, therefore, that there would be little penalty associated with enclosing the steam generator within a shield, other than the cost of the shielding. From this it was reasoned that it would be advantageous to enclose both the core and the steam generator in a single pressure vessel. This should reduce the size and cost of both the shielding and the coolant gas system and, through structural simplification, will improve the integrity of the pressure envelope. For operation at the high gas temperatures planned for all-ceramic fuel elements, it would be advantageous to maintain the entire structural envelope of the high-pressure system at a temperature close to the reactor inlet gas temperature to minimize thermal stresses. This temperature should be below 700°F to permit the use of a single type of low-alloy steel, such as A-212, grade B, steel.

The minimum cost containment vessel will be a vertical circular cylinder with ellipsoidal or hemispherical end domes.[7] The containment vessel diameter should be as large as possible consistent with buckling limit considerations both to maximize the floor space available and to minimize the cost. The cost of such a containment vessel will run from three to five times the cost of the shell of a good building of the same size.[7]

The reactor core should be a vertical circular cylinder of stacked ceramic blocks to simplify both support of the moderator and fuel-loading problems. Ceramic fuel elements should be stacked in compression, and hence the reactor should be designed for loading from the bottom. If practical, access from the top should also be provided to assist in servicing and to aid in coping with unforeseen problems.

A once-through steam generator should be employed to simplify the structural design and reduce the costs. The steam outlet conditions should

be 1050°F to facilitate comparison with modern coal-fired plants. The tube arrangement should give good water drainage and should permit the use of essentially the same tube length for all the tubes to simplify construction and to give well-balanced water and steam flow conditions.

4. THE HGCR-2 GRAPHITE-MODERATED CORE AND STEAM GENERATOR UNIT

The first design was evolved by applying the precepts of the preceding section to a conventional graphite-moderated gas-cooled reactor core to yield a new system configuration.

This design proposal was prepared in a preliminary fashion primarily to disclose the major problems associated with this type of reactor plant. There was no attempt to work out the details of such major items of equipment as the fuel charge machine or the internal structure of the blowers. Emphasis was placed on problems peculiar to the proposed configuration.

General Layout

The general layout of the proposed power plant, designated the HGCR-2, is shown in Figs. 2 through 6, and the design conditions are given in Table 2. The similarity to the GCR-2, i.e., the same core size, about the same blower drive motor power, and the same reactor core gas inlet temperature, may be seen. The blower configuration proposed not only provides for thermal-convection cooling and a minimum pumping loss, but it also reduces the differential thermal expansion problem in the ducting between the main pressure vessel and the blowers. Essentially all the relative differential thermal expansion will occur axially along the ducts and hence will require only a simple bellows expansion joint in each horizontal duct.

While no attempt was made to design the fuel element, it was assumed that it would be a thick-walled cylinder with convolutions or axial fins to increase the surface area. It was further assumed that the fuel element would be of graphite containing either UO_2 or uranium carbide, and that the average fuel element temperature in the hot zone would be no more than 1800°F, with occasional hot spots of no more than 2400°F. These operating temperature limits were chosen to minimize the diffusion of volatile fission products out of the fuel element to the cooling gas. It was assumed that the fabrication of the fuel element would be such that

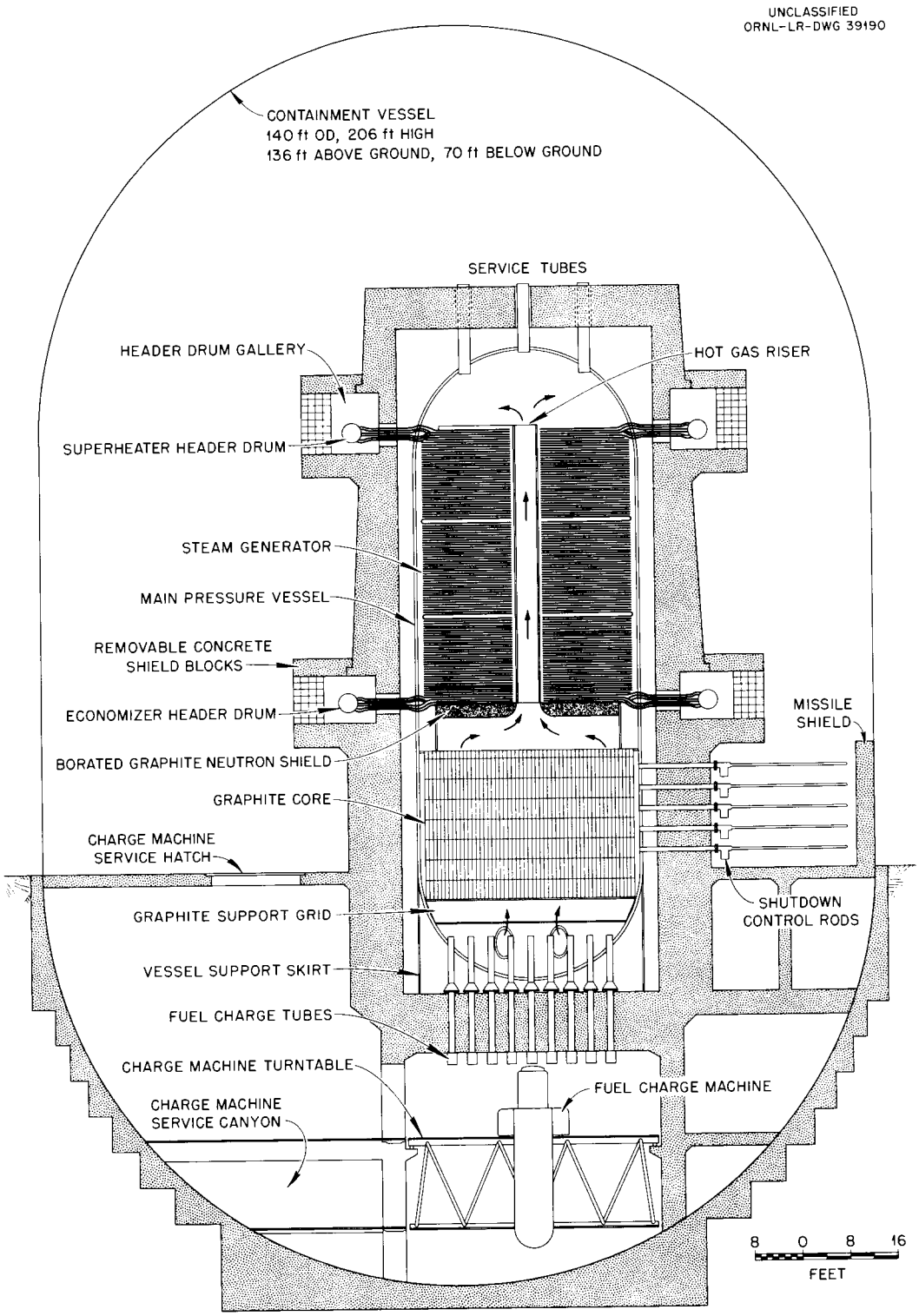

Fig. 2. Vertical Section Through the HGCR-2 Graphite Reactor—Steam Generator Unit Showing the Steam Header Drums.

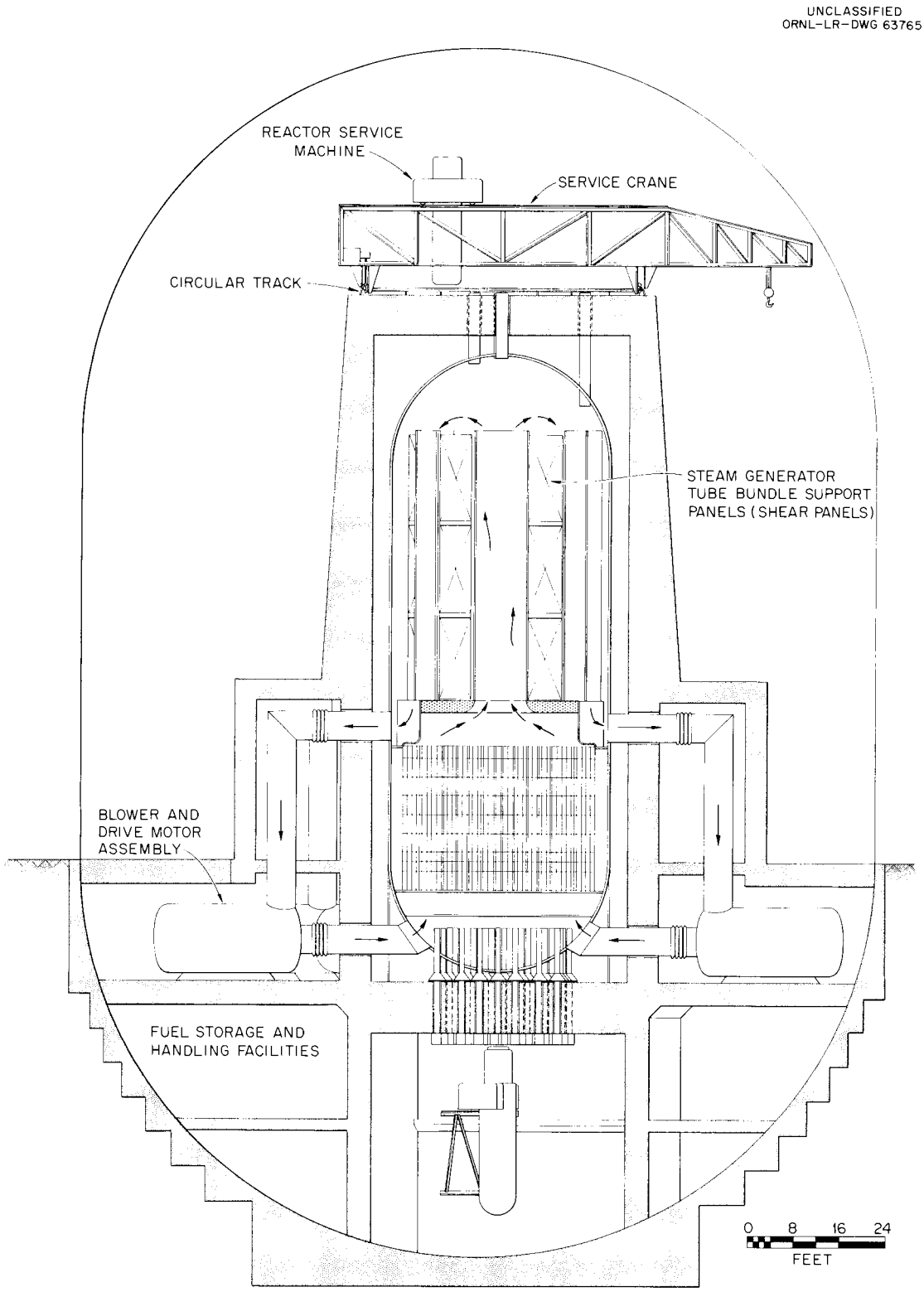

Fig. 3. Vertical Section Through the HGCR-2 Graphite Reactor–Steam Generator Unit Showing the Blower and Drive Motor Assemblies.

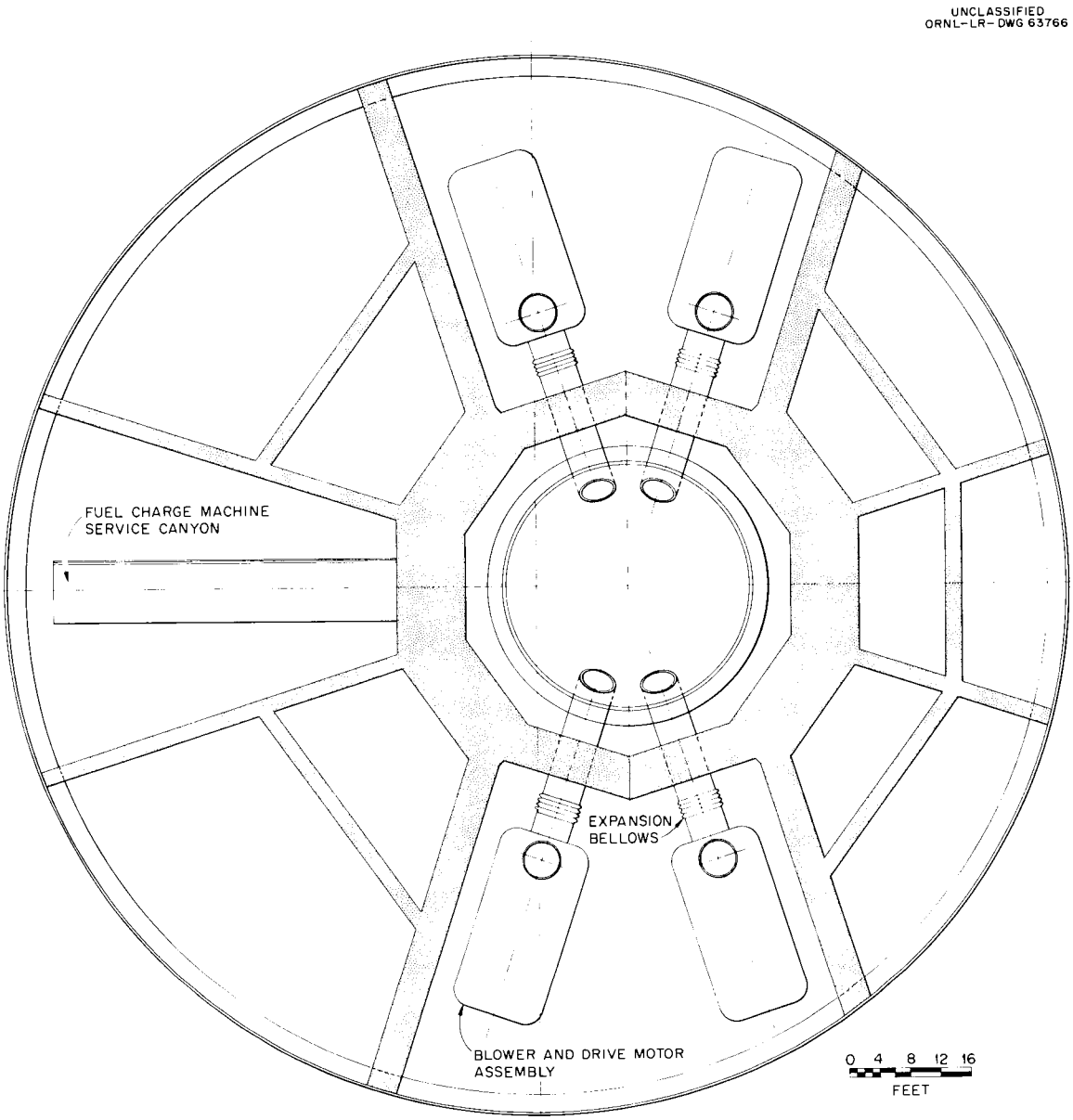

Fig. 4. Horizontal Section Through the HGCR-2 Graphite Reactor–Steam Generator Unit Showing the Blower and Drive Motor Assemblies.

no fission products could enter the gas stream directly as fission-fragment recoils.

The peak gas temperature was chosen to be 1250°F and the steam outlet temperature, 1050°F. The fuel element surface area and the core flow passage area were increased over the values used in the GCR-2 so that the pressure drop through the reactor core would be cut approximately in half

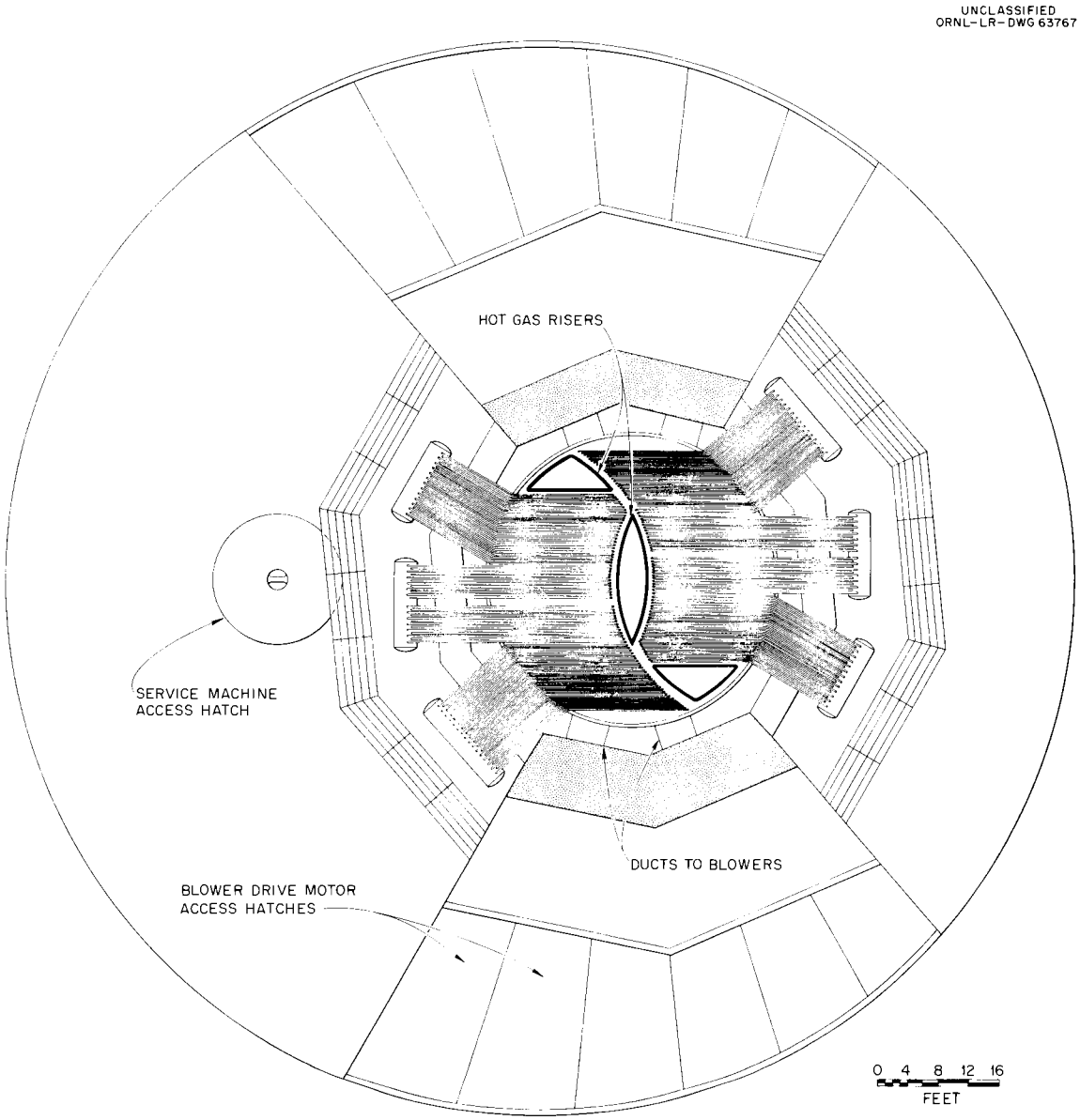

Fig. 5. Horizontal Section Through the HGCR-2 Graphite Reactor–Steam Generator Unit Showing the Heat Exchanger Header Drums.

for a given gas flow rate. At the same time, the temperature difference between the fuel element surface and the cooling gas was doubled, partly to accommodate the lower gas velocities and partly to accommodate the higher power output. A reactor thermal output of 1374 Mw resulted from these changes.

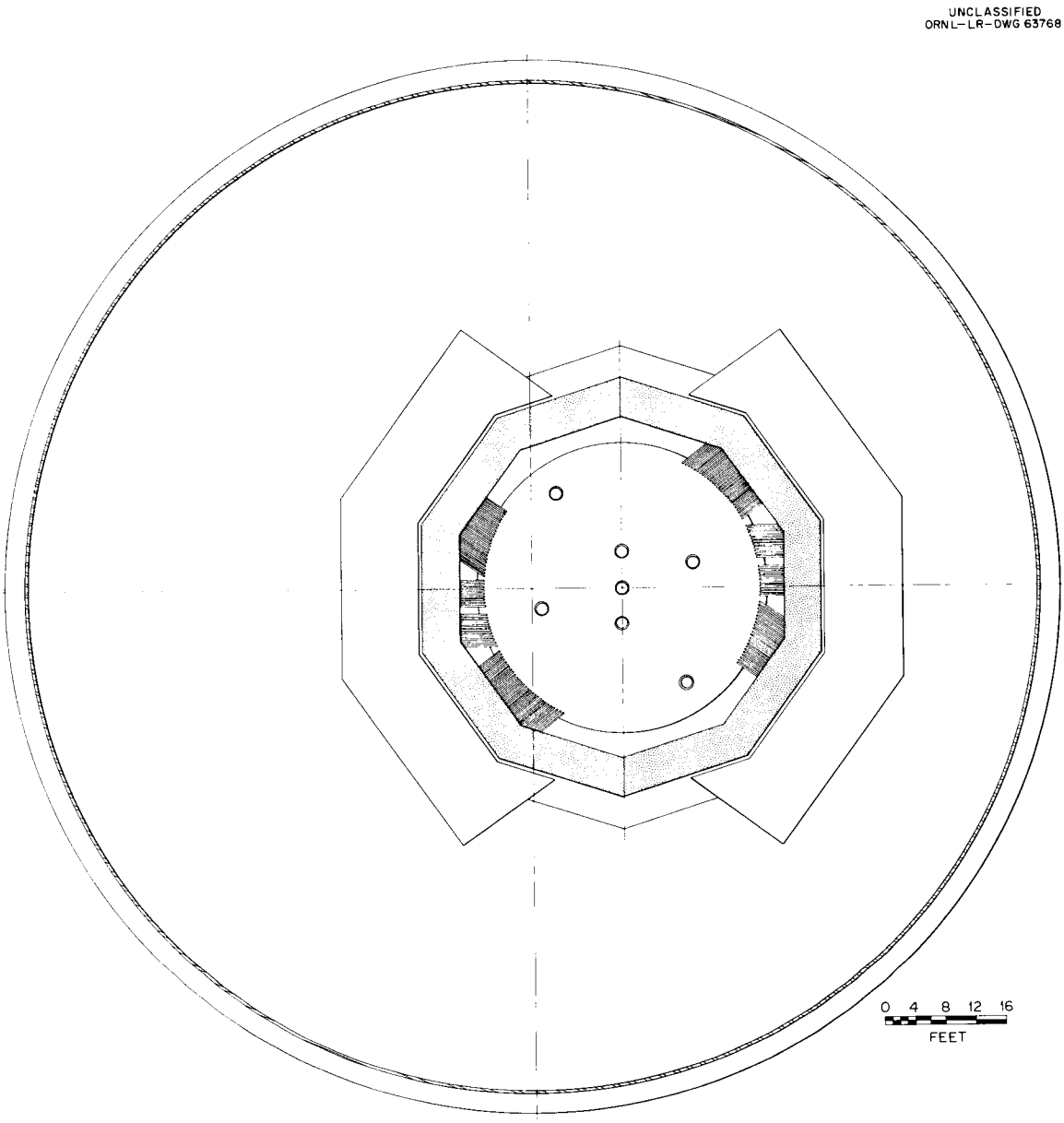

Fig. 6. Horizontal Section Through the HGCR-2 Graphite Reactor–Steam Generator Unit Showing Service Tubes.

Steam Generator

An important feature of the design is the heat exchanger layout, which is shown in Figs. 2 and 5. This system satisfies the precepts set forth above and has many desirable features. The serpentine arrangement chosen for the steam generator gives good counterflow characteristics,

UNCLASSIFIED
ORNL-LR-DWG 63769

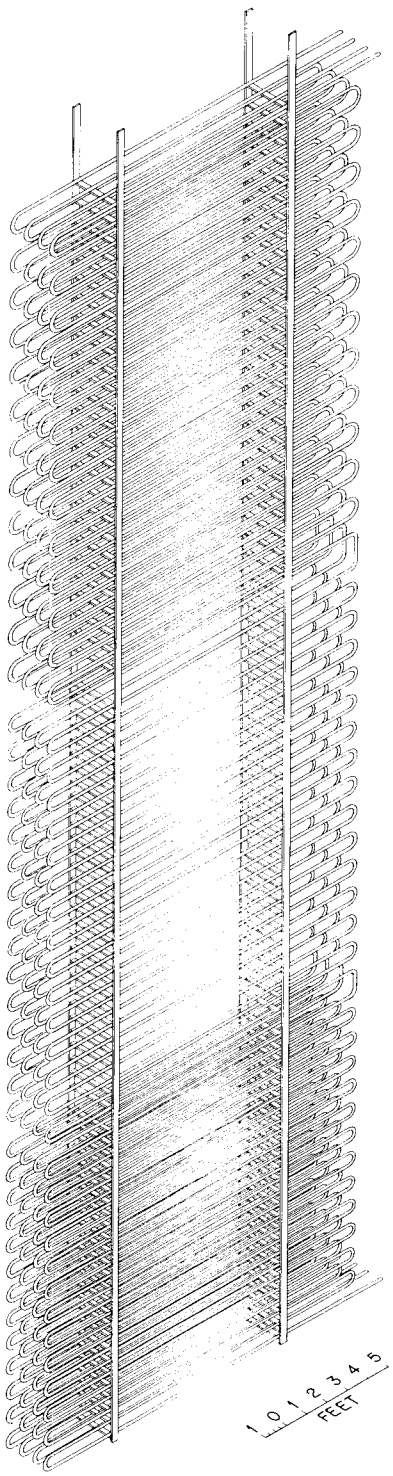

Fig. 7. Steam Generator Tube Bundle Assembly.

good water drainage, a fairly low-cost type of construction, and good utilization of the volume of a cylindrical pressure vessel. In the proposed layout, 72% of the total internal cross-sectional area of the vessel in the heat exchanger region is occupied by steam generator tubes, whereas the corresponding value for the Calder Hall steam generators is only 63%. As may also be seen, this configuration eliminates the cost of the end closures for the heat exchanger pressure vessels and much of the gas duct-work of the British reactors and the GCR-2. Most of the cross-sectional area in the heat exchanger region not occupied by tube banks is used for stacks or ducts which convey the hot gas from the core outlet to the top (or gas inlet end) of the steam generator. These stacks also permit access to the fuel channels from the top of the reactor. Seven access holes 2 ft in diameter have been provided in the pressure vessel over these channels through the steam generator tube banks (see Fig. 6).

A major feature of the design is the use of tube bundles in the steam generator. As indicated in Fig. 7 each tube bundle consists of 39 tubes which zigzag back and forth vertically upward with three layers per bank. They are spread out into six layers where they penetrate the pressure vessel to facilitate welding and to minimize the structural weakening

effect on the pressure vessel wall in the vicinity of the penetrations. Preliminary layouts show that the welds between the tubes and the pressure vessel thermal sleeves can be made reasonably accessible. A preliminary estimate indicates that welding and inspection will require an average of 1 to 2 hr per tube or about 1000 hr. If four crews work simultaneously (two at the top and two at the bottom) about 250 hr would be required for this set of welding operations. It is expected that these tube bundles would be assembled in jigs in a building at the site and lowered into place as complete units, with the tubes supported on the "ladders" shown in Fig. 7. The side tube bundles would be installed first, after the pressure vessel had been completed part way up into the hemispherical head, but before final closure. The ends of the tube bundles close to the pressure vessel would be supported by brackets welded to the pressure vessel. The outboard ends of the outer bundles would be supported from a truss cantilevered from the side of the pressure vessel. Panels across the ends of the tube bundles would serve both as elements of the walls of the stacks for the hot gases and also as shear panels to carry the dead weight load of the tube banks laterally to the pressure vessel wall. This appears to be suitable for either the temporary or the permanent support of the tube banks. Another promising approach would be to support the outboard ends of the tube bundles from the top head of the pressure vessel. Upon completion of the pressure vessel the tube support ladders could be linked to eyes welded to the inner surface of the top of the hemispherical head so that the tube bundle ladders would be supported in simple tension. This arrangement would actually reduce the stresses in the pressure vessel head somewhat because the steam generator weight would partly offset the internal pressure force. The upper portion of any tube bank support structure used should be made of a refractory alloy steel to withstand the high gas temperatures under operating conditions. Sway braces would, of course, be required with this arrangement to accommodate lateral shaking forces in an earthquake.

The large amounts of differential thermal expansion between major elements in the system and the penetrations of the main pressure vessel

pose some serious questions. The magnitude of the differential thermal expansion is indicated below:

	Vertical Movement (in.)
Horizontal control rods	
2 ft above floor	0.47
15 ft above floor	0.90
Water header drums 25 ft above floor	1.25
Steam header drums 105 ft above floor	3.82
Duct openings to blower 22.5 ft above floor	1.16
Top of vessel 113 ft above floor	4.2

It appears that this differential thermal expansion can best be accommodated through bending of long relatively straight sections of tubing. This, in turn, raises the question as to whether these straight sections could be made sufficiently long to accommodate the differential thermal expansion and yet remain sufficiently strong to support their own weight at the high temperatures involved. Preliminary calculations indicate that there is a reasonable margin of strength in the long unsupported spans required to provide adequate flexibility. This was found to hold for both the spans between the pressure vessel and the header drums and for the spans between the pressure vessel and the points of support of the tube banks within the steam generator.

Activation of water in the steam generator should not be a problem, since the fast neutron flux in that region will be small. In order to insure that streaming of fast neutrons into the steam generator will not be a problem, a 1.0-ft-thick layer of graphite has been added across the top of the baffle above the core outlet. Since gamma and neutron radiation escaping through the shield penetrations provided for the tubes passing to the header drums would present a biological hazard, concrete block shielding has been placed across the outer face of the header drum galleries. In the event that a steam header drum should ever require replacement, this concrete block shielding can be lifted out of the way. Access to the header drum gallery would be provided by a port. Space

has been provided around the header drums in this gallery for inspection and maintenance. Conventional manholes would be fitted in the ends of the header drums for access to the interiors.

Pressure Vessel

The main reactor pressure vessel would be supported on a skirt at the base. Thermal insulation would be provided on this skirt to give a controlled temperature gradient between the pressure vessel and the foundation to keep thermal stresses at reasonable values. The pressure vessel would be cooled by means of a simple bypass gas flow designed for a temperature rise of about 100°F. This arrangement gives little penalty in over-all performance because the core outlet gas temperature is so high that the small loss in temperature resulting from the admixture of the bypass flow gives a negligible effect on performance. If a double layer of sheet metal were employed as a shroud to isolate this gas stream from the hot gas in the top dome and the heat exchanger, the bypass flow could be kept to about 1% of the main coolant gas flow.

The ligaments between the superheater outlet tube penetrations of the pressure vessel would require similar but more carefully detailed provisions for cooling. Thermal insulation would be placed in the annulus between the hole in the pressure vessel and the superheater tube passing through the penetration. This thermal insulation would probably consist of several layers of sheet metal designed to function as reflective insulation.

The pressure vessel wall thickness over the major portion of the length of the cylindrical section should be 4 1/2 in. for a hoop tension stress of 15 000 psi. The hemispherical domes at the top and bottom of the main pressure vessel should have a wall thickness of 2 1/4 in. The wall thickness would, of course, be increased in the vicinity of the penetrations for the steam generator tubes, the air ducts, the fuel charge tubes, and the servicing tubes, as well as the support skirt at the base.

Main Coolant Blowers

Axial flow blowers similar to those of the GCR-2 are well-suited to this application. For convenience it has been assumed that the blowers would be driven by large induction motors operating from turbine-driven variable-frequency generator sets. This eliminates the necessity for bypass valves and a bypass duct, although space is available for installation of that equipment. The arrangement shown has the advantage of minimizing the number of moving parts in the contaminated portion of the plant and simplifies the pressure envelope.

The blower installation was designed to facilitate the removal of a blower in the event such an operation became necessary. Holes with removable plugs were provided in the roof of the blower vaults so that the blower holddown capscrews could be removed with long-handled wrenches to minimize personnel exposure to radiation. Acetylene torch equipment could be mounted on tracks provided around the blower ducts in the original installation. This equipment could be positioned remotely or personnel could enter the blower vault and mount it directly. In the latter case the cutting equipment could be started, and the cutting operation could proceed automatically while the operator left the vault and watched from a distance. The ducts could be cut at a slight angle to facilitate removal to the side. To reduce the contamination level, the blower could be isolated from the rest of the system with an inflatable bladder, the blower interior could be washed down, and the liquid drained into a shielded tank provided in the original installation. The blower interior could then be sprayed with lacquer to prevent the remaining activity from becoming airborne. After completion of the cutting, the blower could be picked up with the crane and moved to a convenient point under the middle of the hatch before raising it to the main floor. The relatively small cost of including these special provisions to facilitate removal after a blower becomes contaminated should help to achieve the objective of making it possible to remove a blower with at most a few man-hours of labor in regions where the radiation dose rate would be a matter for serious concern.

The blowers were placed in pairs relatively close to each other so that the pressure vessel coolant duct outlets to the blowers would be in a region in the pressure vessel wall that would be reasonably clear of the steam generator tube penetrations. The arrangement was also advantageous in that the concrete structural design is more favorable since the ends of the header drum galleries are adjacent to the air duct shield.

Fuel-Handling Equipment

The fuel charge machine was designed for mounting on a bridge which would rotate on a large circular track in the vault beneath the reactor. The bridge would constitute the load-carrying central portion of a large circular turntable which would be completely floored except for a channel perhaps 6 ft wide across the diameter. Suspended vertically in this channel would be a large cylindrical pressure vessel containing the fuel charging machinery. The bulk of the load from this charge machine would be carried by trucks riding on a single track at one side of the opening in the floor. A second truck mounted near the bottom of the vertical cylinder of the charge machine would ride on a second track and would resist the moment about the axis of the main track arising from the off-center mounting and would preserve alignment. A portion of the circular track on which the entire turntable would revolve would be made removable to permit driving the carriage out from under the reactor into the charge machine service canyon which lies under a hatch in the main floor. This would facilitate removal of equipment from within the large vertical cylinder or replacement of either that equipment or the cylinder itself. In providing for this, while at the same time maintaining a minimum containment vessel over-all height, it was found to be advantageous to displace the center of the reactor pressure vessel some 12 ft from the center line of the containment vessel. A "bubble" in the bottom dome of the containment vessel might have been provided, but it seemed better to avoid this to simplify the containment vessel structure.

Shielding

The thickness of the concrete shielding around the reactor and related equipment was estimated on the basis of the requirements for the various areas. The shield thickness between the reactor pressure vessel and the blower vaults, for example, was reduced in keeping with the shield thickness surrounding the blower vaults and the expected dose from deposits in the blower.

Containment Shell

The containment vessel height and diameter required to give adequate working space around the major components yield a sufficiently large volume that the wall thickness required to resist the pressure stresses of the worst credible accident is much less than that required to resist buckling under wind and snow loads. This indicates that the blower drives should be modified to give a more compact installation by substituting steam turbines for electric motors.

Large doors would be provided in the containment vessel at ground level to permit entry by truck or perhaps by rail, both during construction and for major maintenance operations. During construction it might be best to delay completion of the upper portion of the containment vessel until after installation of the main reactor pressure vessel and other major items of equipment.

5. THE HGCR-3 BeO-MODERATED CORE AND STEAM GENERATOR UNIT

A preliminary design of a reactor—steam generator unit somewhat similar to that described in the previous section but designed to exploit the superior moderating power of BeO is shown in Figs. 8, 9, and 10. The same design precepts were followed as for the HGCR-2 design, except that the reactor core was made as small as possible consistent with considerations of heat transfer, thermal stress, and fuel element mechanical strength for handling operations. This permitted an increase in the system pressure which reduced the costs of the BeO and the pressure vessel, reduced the heat transfer surface area, and reduced the cost of the steam generator. The resulting reduction in tube length coupled with that obtainable by reducing the tube diameter made it possible to run the tubes in the steam generator parallel to the gas flow to give better utilization of the pressure vessel volume, reduce the gas pumping losses, eliminate the expense of the return bends required in a serpentine arrangement, and simplify the structural support problem.

It is evident in Fig. 8 that in many respects this design parallels that presented for the graphite-moderated HGCR-2. The same fission-product escape rates and gas system contamination levels, the same relative positions of reactor core, steam generator, blowers, shield, and steam generator header drums, and the same containment vessel have been employed. Because of this, only the points in which the design differs from the HGCR-2 are discussed below.

Gas System Pressure and Temperature

The smaller core diameter possible with BeO suggested that the features of a small BeO core should be exploited to the fullest and that this implied the use of the highest cooling gas pressure practicable. Experience with both conventional steam power plants and pressurized-water reactors has shown that costs begin to rise rather steeply for pressures above around 1000 psi, so that value was chosen for the design study. Steel fabrication experience indicates that there is a strong

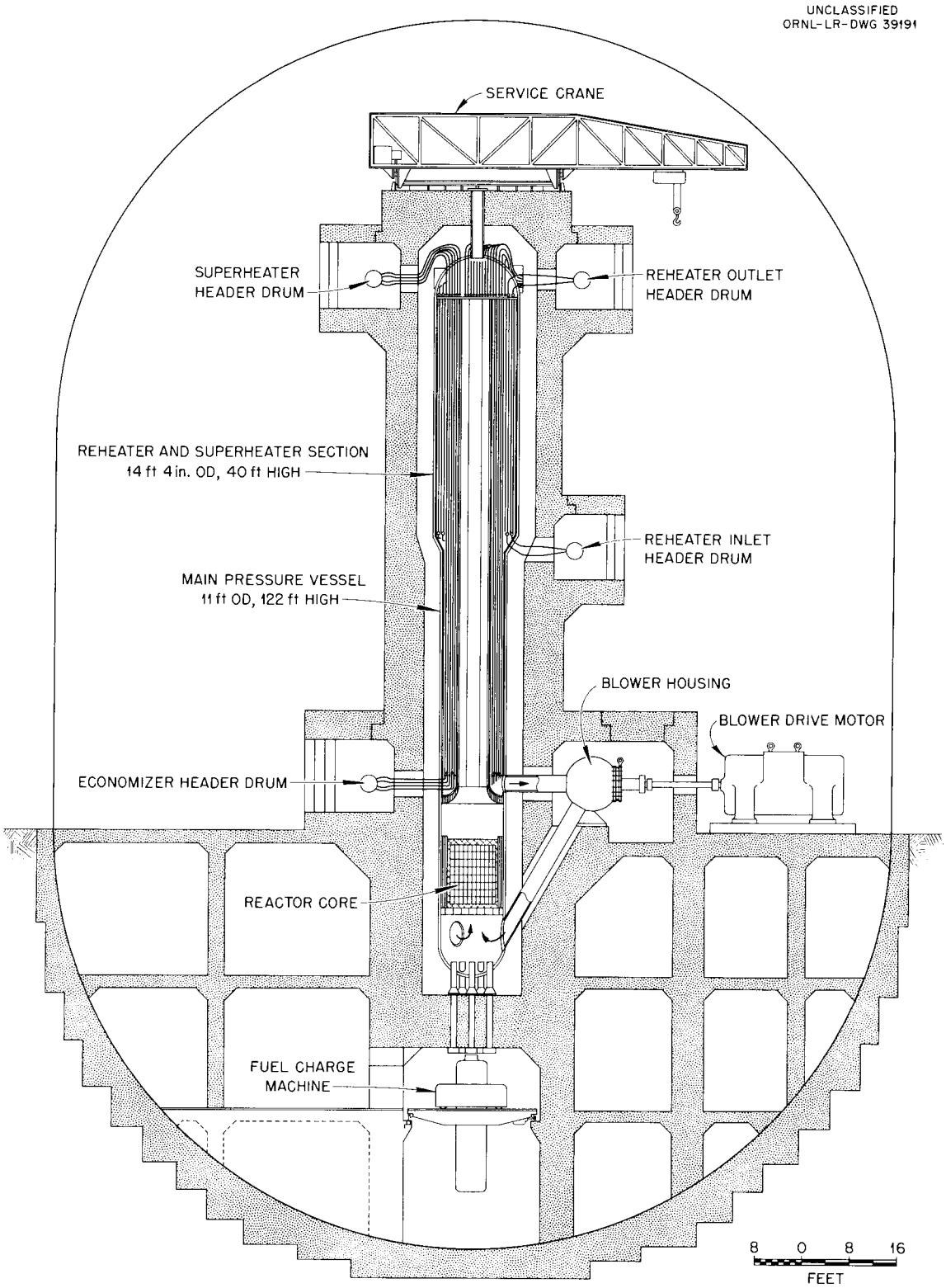

Fig. 8. Vertical Section Through the HGCR-3 BeO Core-Steam Generator Unit.

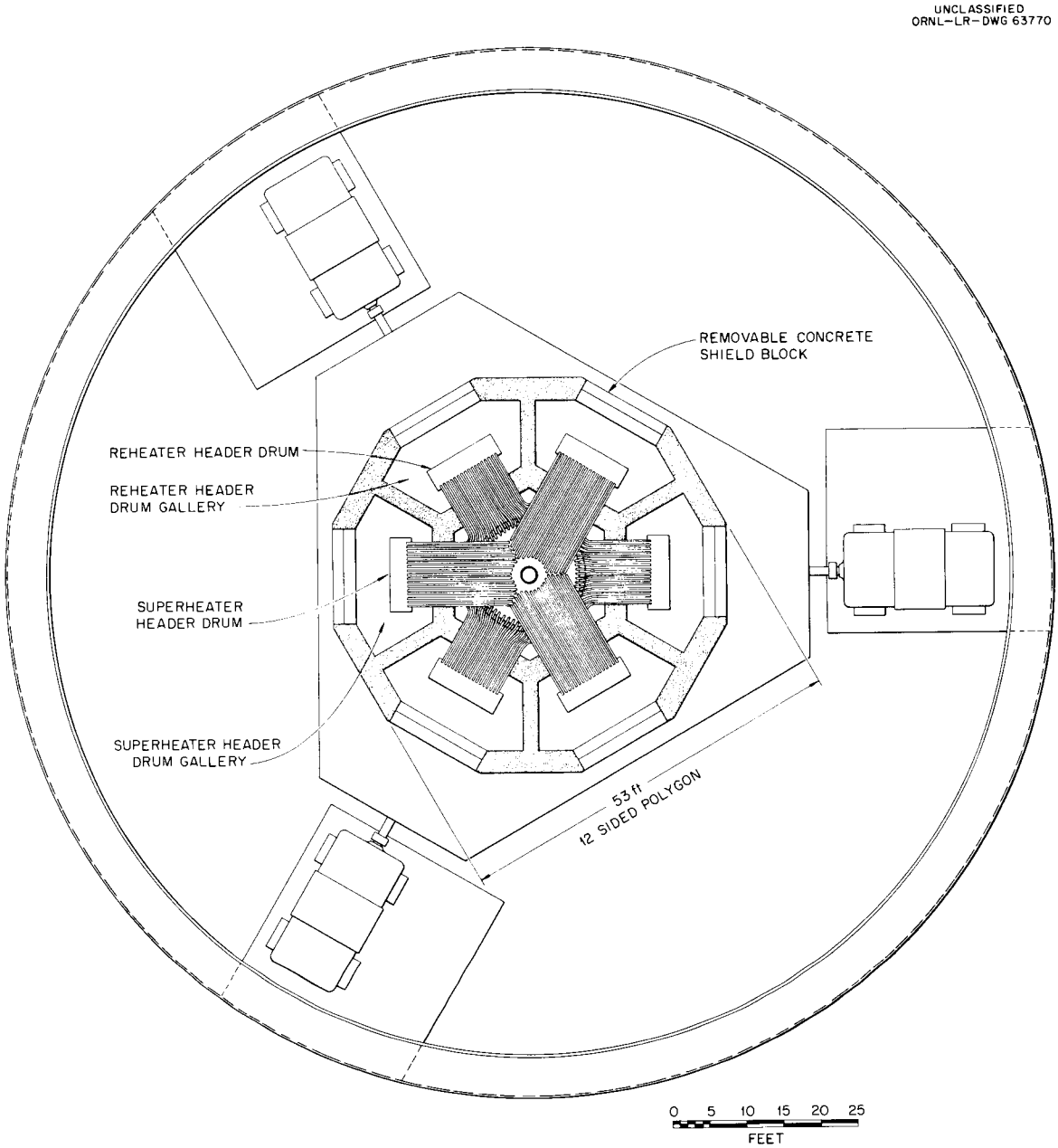

Fig. 9. Horizontal Section Through the HGCR-3 BeO Core—Steam Generator Unit Showing Superheater and Reheater Headers.

incentive to hold the pressure vessel wall thickness to 4 in., and certainly not more than 8 in., which in turn led to a 12- to 16-ft-i.d. pressure vessel.

The high allowable operating temperature of BeO would permit gas temperatures of 1800°F or more. However, it was decided that in this

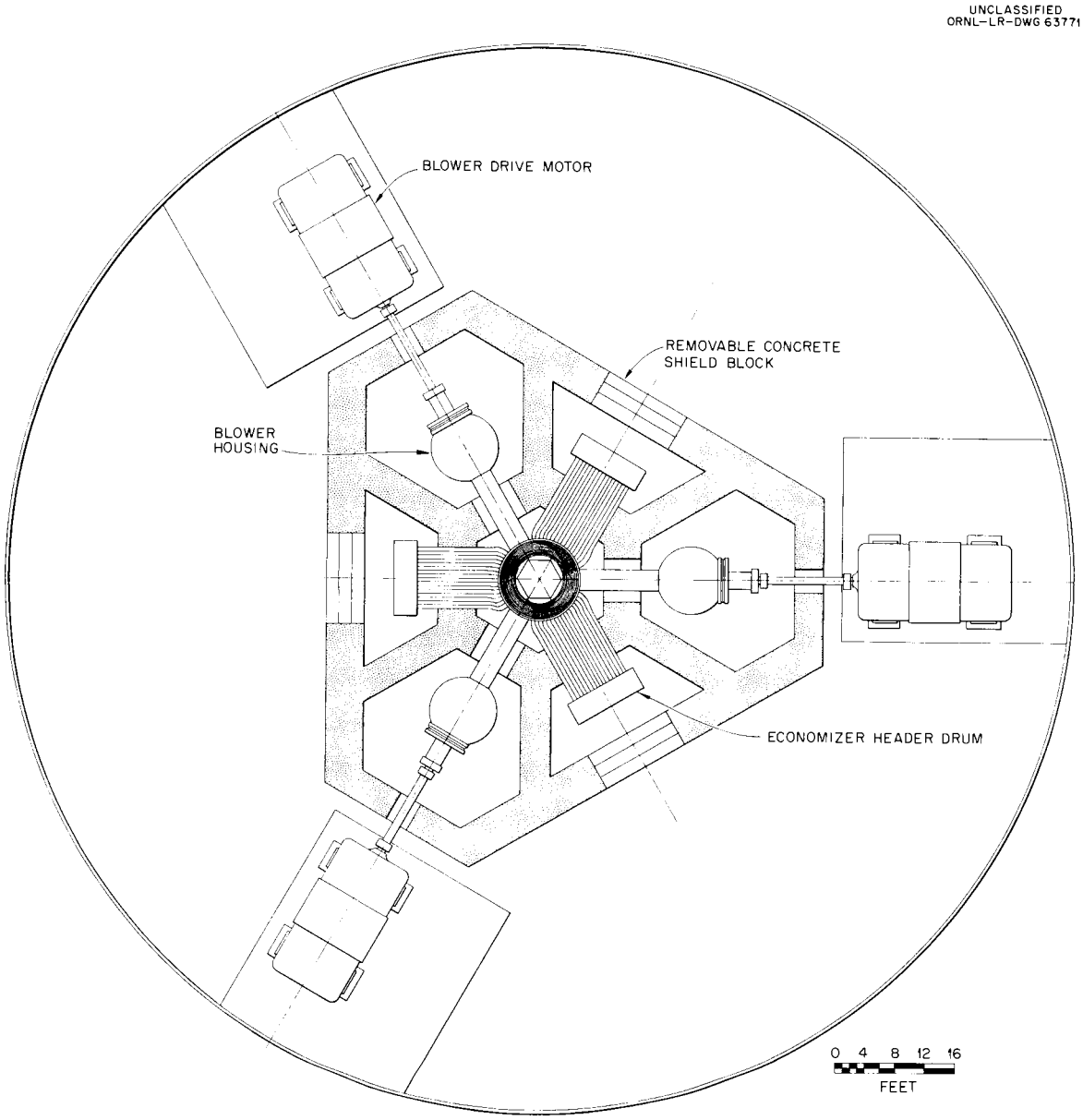

Fig. 10. Horizontal Section Through the HGCR-3 BeO Core—Steam Generator Unit Showing Economizer Headers and Blowers.

preliminary design study it would be best to limit the average fuel temperature in the hot zone to around 1800°F to reduce fission-product diffusion rates in the fuel elements and hence contamination of the cooling gas. In view of the rapid loss in strength of iron-chrome-nickel alloys at temperatures above 1200°F, it was also decided that the gas temperature in the steam generator should not exceed 1350°F for normal operation

so that under no circumstances could the tube metal temperature exceed that value and under no ordinary conditions could the tube wall temperature exceed 1200°F. A 650°F gas outlet temperature from the steam generator was chosen as being low enough to cool the A-212, grade B, steel pressure vessel and yet high enough to give a well-proportioned steam generator.

Reactor Core

The design of the reactor core was based initially on rough estimates of the relative proportions of BeO and fuel required for good performance. As a point of departure, the uranium-to-carbon ratio found to give a good conversion ratio in the GCR-2 and related graphite reactors was multiplied by the ratio of $\xi\sigma_s$ for BeO to $\xi\sigma_s$ for graphite to obtain the uranium-to-BeO ratio for the new core. It was then assumed that about 10% of the BeO would be in the fuel element and the balance in the moderator blocks. Since the cost of the BeO powder will be $12 to $20/lb, fuel fabrication costs might become excessive if more than 20% of the total BeO in the core had to be reprocessed each time with the fuel. With the ratio chosen, the cost of the BeO in the fuel elements would be roughly $0.40/g of uranium burned, a reasonable value. It was found that an allowance of about 25% of the core volume for the cooling passages led to a well-proportioned core from the heat transfer standpoint. Subsequent multigroup calculations indicate that these are reasonable but far from optimum proportions.[8]

The choice of reflector thickness entails a compromise between neutron economy and capital costs. In the design shown, a reflector thickness of 17 in. of BeO has been used at both the sides and the ends of the reactor. The total amount of BeO required for the reactor could be cut by 30 to 50% if the BeO in the reflector were replaced with graphite. This would lead to an increase in the size of the pressure vessel, but the resulting cost increment would be much less than the saving in the cost of the BeO. This arrangement would have the disadvantage, however, of giving a composite core in which the allowable operating temperature of the graphite should not exceed about 900°F if CO_2 is used as the coolant.

The availability of BeO is an important question. The U. S. consumption of beryllium and beryllium oxide in 1959 was equivalent to about 300 tons of BeO. About 30 tons would be required for the 500-Mw electrical power plant proposed, or about 1/20 of the 1959 consumption of beryllium. If all the beryllium consumed in the U. S. in 1959 had been used to build power plants of this type, a total of 10 000 Mw of power production capacity could have been added to the U. S. utility systems. This is roughly equal to the annual expansion rate of the power industry. Much larger supplies of beryllium are available than are indicated by the current rate of consumption, and expansion of rocket production is leading to a large increase in production. Table 4 shows a recent estimate of current and future production. This increase in production may lead to a reduction in cost by a factor of about 2.

Table 4. Estimated Annual U. S. Production of Be and BeO
(Data from Brush Beryllium Corporation)

	1959	1965	1970
Be metal production, lb/yr	150 000	1 000 000	5 000 000
BeO equivalent, lb/yr	450 000	3 000 000	15 000 000
BeO production capacity, lb/yr	50 000	2 000 000	20 000 000
Total BeO equivalent, lb/yr	500 000	5 000 000	35 000 000

The (n,α) reaction in beryllium produces Li^6. Previous estimates of the improvements in η possible through the (n,2n) reaction in beryllium have usually included an allowance, not only for the neutron losses to the (n,α) reaction, but also for the neutron losses to the Li^6 formed from that reaction. The BeO in the moderator of the proposed reactor might be a relatively porous variety. It is believed that, with relatively porous BeO at sufficiently high temperatures, the Li^6 formed from the (n,α) reaction may migrate to the surface of the BeO crystals and react with the CO_2 atmosphere to form a carbonate or an oxide. The vapor pressures of these materials are shown in Fig. 11. It may be seen that

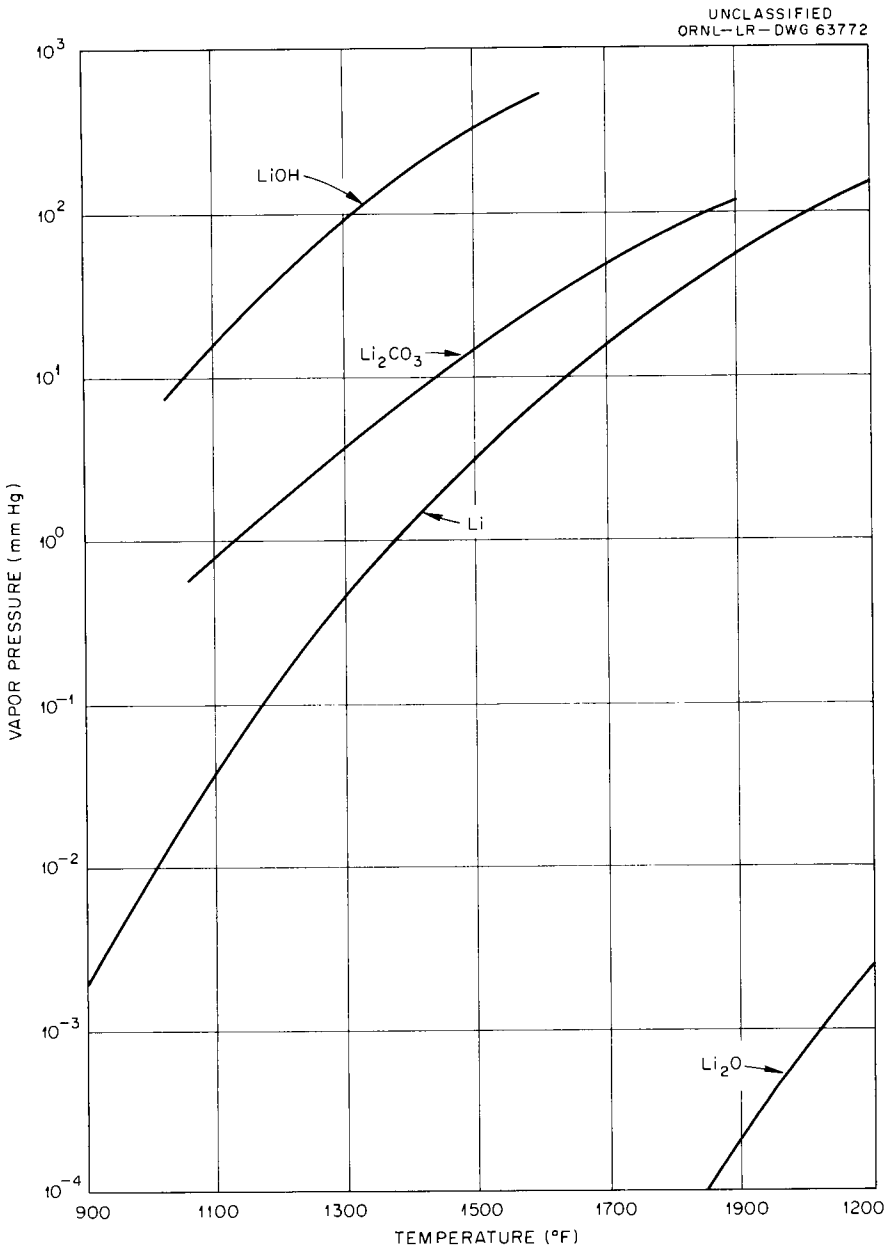

Fig. 11. Effects of Temperature on the Vapor Pressure of Lithium, Lithium Carbonate, Lithium Oxide, and Lithium Hydroxide.

in the temperature range in which the BeO will operate, the vapor pressure of both lithium carbonate and lithium oxide will be from 1 to 10 mm Hg, so these materials might vaporize and be deposited in the heat exchanger within a few months of the initial formation of the Li^6. The vapor pressure of beryllium oxide, presented in Fig. 12, is many orders of magnitude lower than for lithium carbonate at any given temperature.

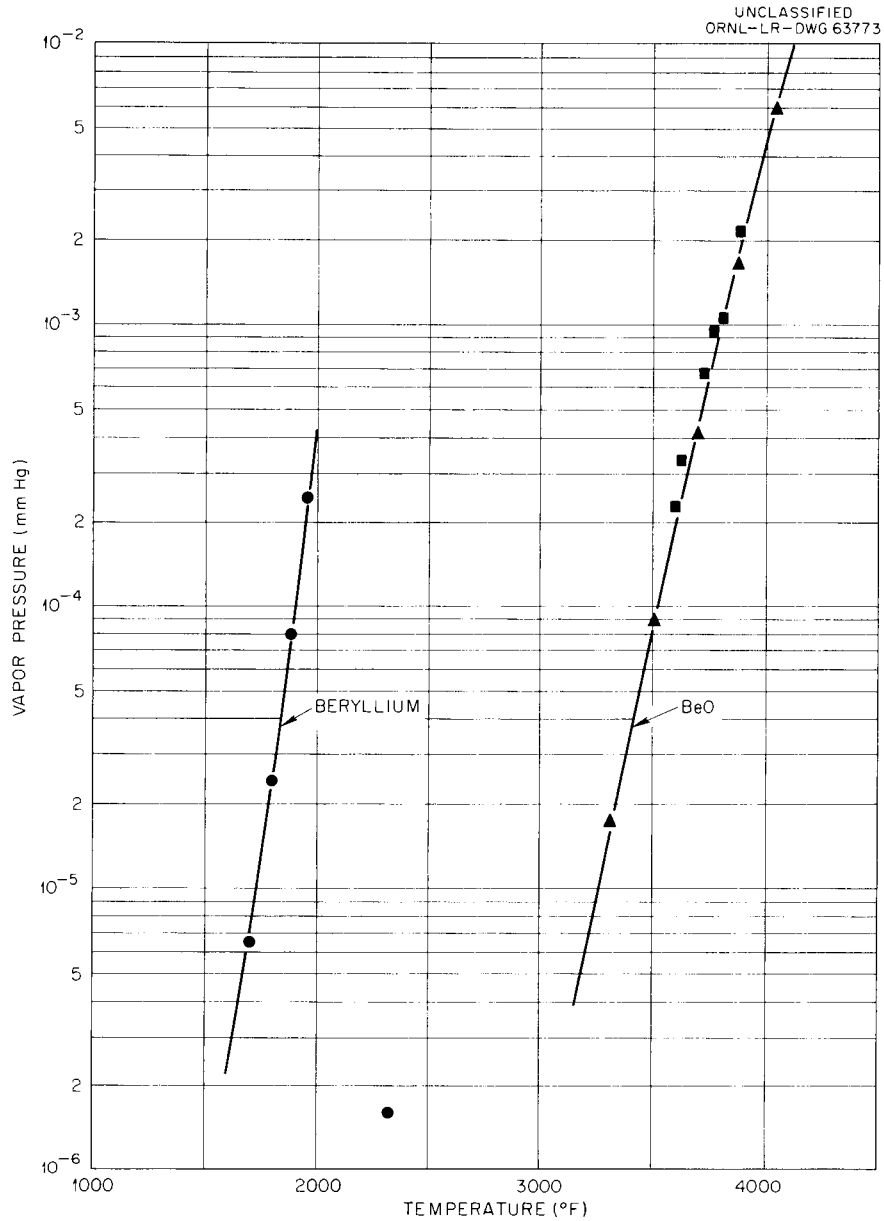

Fig. 12. Effects of Temperature on the Vapor Pressure of Beryllium and Beryllium Oxide.

The heat transfer problem in the core of an all-ceramic reactor is greatly eased by the use of 1000-psi CO_2 as compared with 300-psi He. Even with a 7.7-ft core diameter, the coolant flow passages need be only 25% of the core cross-section flow passage area to keep the pumping power loss to 1% of the heat energy removed. The allowable operating temperature with BeO would permit gas temperatures so high that over-heating of

steam generator tubes would prove to be a problem. Because of this, the reactor core outlet gas temperature was limited to 1350°F. This gives a surface-to-gas temperature difference in the core of about 300°F and a fuel element surface heat flux of approximately 400 000 Btu/hr·ft^2. The cooling passage length-to-diameter ratio required to produce the desired heating effectiveness from the core heat transfer matrix proved to be approximately 200. A core length of 10 ft coupled with an equivalent passage diameter of 5/8 in. through the fuel elements was chosen to give a well-proportioned reactor.

The high operating temperature of the fuel element gives a significant amount of thermal radiation from the fuel element to the moderator. In the hot zone (approximately 75% of the way through the reactor) it was found that, with an 1800°F fuel element temperature and a 1600°F wall temperature, the heat flux from the fuel element surface to the channel wall by thermal radiation would be approximately 10 000 Btu/hr·ft^2. This coupled with the gamma energy absorbed in the moderator blocks gives a total of about 7% of the power output to be transferred from the coolant channel to the cooling gas stream, and the channel flow passage area was proportioned accordingly.

Fuel Element

The design of the fuel element depends first and foremost on the problems of fabrication. Fortunately, the coefficients of thermal expansion of BeO, UO_2, and ThO_2 are all approximately the same. BeO-UO_2 bodies with up to 35% UO_2 by volume have been fabricated with no major difficulty. Similar amounts of a thoria-urania mixture have also been fabricated in BeO bodies with excellent success. Some work has been conducted on the coating of beryllium oxide fuel elements with nonfuel-bearing ceramic layers, and the results are encouraging.

Ceramic fuel slugs can be made in a variety of shapes, some of which are shown in Fig. 13. In a system in which the power density is to be increased to the highest practical level, the limit on the power density will probably be that imposed by thermal stresses in the fuel slug. This

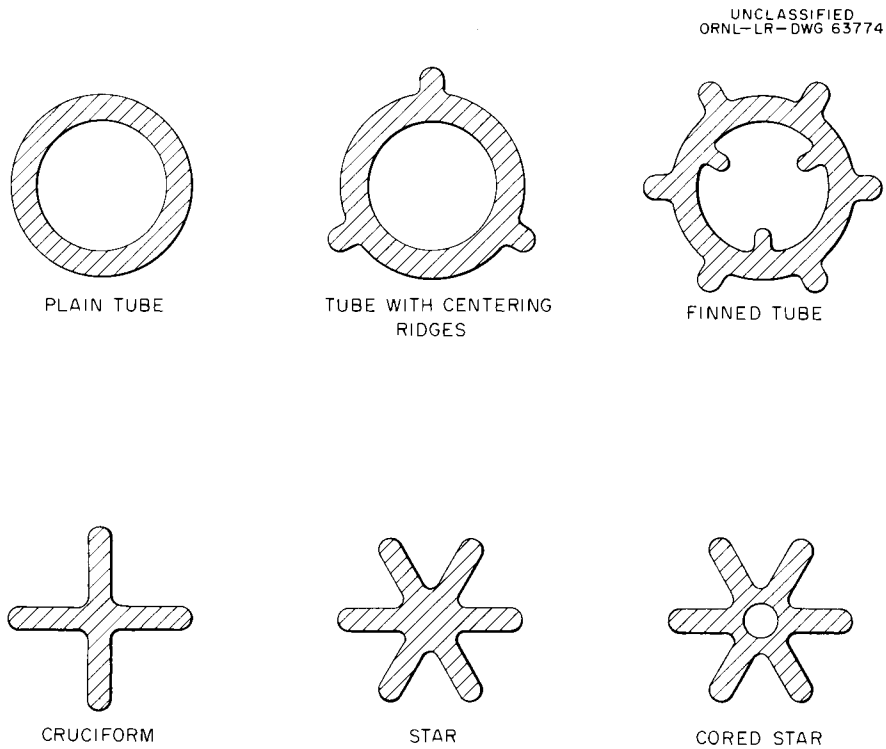

Fig. 13. Typical Cross Sections for All-Ceramic Fuel Elements.

in turn means that the fuel element should be made as thin in section as possible, and the section should be designed to give as uniform a temperature as possible. Of the six shapes shown in Fig. 13, for example, the star-shaped fuel element appears to be the least desirable in this respect because the temperature at the very center would probably be higher than the average temperature by an amount greater than that for any of the other fuel elements. Even the finned tube of Fig. 13 would have an appreciably greater peak-to-average temperature ratio than a simple cylindrical tube of the same thickness. Thus it appears that the simple tube would be the best fuel element shape from the thermal standpoint. Fortunately, much work has been carried out on the fabrication of tubes of this sort, and it appears to be one of the most favorable shapes from the fabrication standpoint, particularly if the ratio of the wall thickness to the inside diameter of the tube is made somewhere

between 1/4 and 1/8. As will be discussed later, this shape is also well suited to fuel-handling operations.

The effects of both the wall thickness and the heat flux on the thermal stress in BeO tubes, assuming that the material is perfectly elastic, is shown in Fig. 14. This indicates that, for the power density desired, the wall thickness should not be more than about 1/8 in. Little information is available on the resistance of BeO to thermal stresses in the

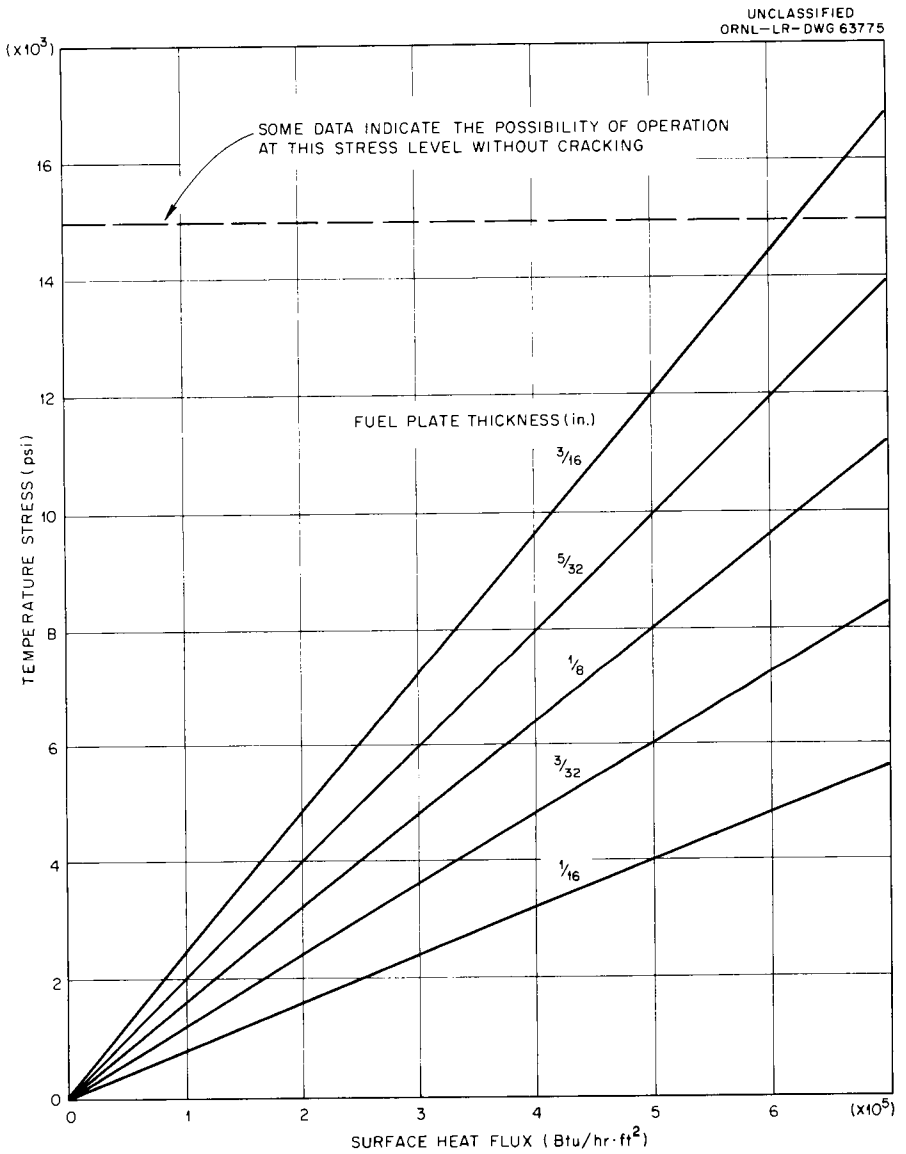

Fig. 14. Effects of Surface Heat Flux and Fuel Element Thickness on Thermal Stress Assuming an Ideal Elastic Body Having the Properties of BeO at 1500°F.

operating temperature range of the proposed fuel element, particularly after irradiation.

An important factor in choosing the fuel element shape is its resistance to mechanical shock and other loads in handling. It is essential that the fuel element be resistant to breakage or chipping since the particulate activity in the gas stream must be kept low. The more effective the coating on the fuel element the more important it is to minimize chipping or spalling. Experience with the fabrication of ceramic tubes indicates that a 7/8-in.-o.d. tube with a 1/8-in.-thick wall can be fabricated readily in lengths of 6 to 12 in. to give a reasonably rugged fuel slug which will withstand much abuse in handling. The length-to-diameter ratio could be made larger than this if desired, and warpage during the sintering operation might be kept low by sintering with the tubes suspended vertically, as is commonly done with alumina. The green strength of the extruded material can be made sufficient to permit this.

Centering of the fuel slug in the channel can be accomplished through the use of fins on the fuel slug or through the use of radial ridges in the bore of the moderator block. The latter is desirable, not only to minimize thermal stresses in the fuel slug, but also to minimize fuel fabrication costs, since a fuel loading will have a life of only 4 to 12 months, whereas the moderator blocks should last 10 years or more.

The buildup of U^{233} in the thoria blanket will lead to a substantial production of heat in that region. Since the blanket will have a life of 2 to 3 years, the buildup of power production in the blanket will be gradual. The coolant flow distribution through the core and blanket might be changed from one core loading to the next by removing or installing gags in openings to the plenum leading to the blanket cooling channels.

Steam Generator

From the pressure vessel cost standpoint, it is advantageous to make the steam generator vessel diameter equal to or less than that for the reactor. An ORNL study[3] of small gas-cooled reactor cores in 1958 indicated that this leads to high costs for both the pressure vessel and the

tube matrix if a cross-flow serpentine tube bundle such as that of the GCR-2 is employed. This comes about because the small vessel diameter cuts the tube length, increases the number of serpentine bends, and gives poor utilization of the pressure vessel volume. Relatively large tube spacings must be used with transverse flow over tube banks to keep gas pumping losses to reasonable values.

A steam generator configuration in which the tubes run parallel to the axis of the pressure vessel has obvious advantages. The principle problem is to get a well-proportioned unit from the heat transfer standpoint without getting excessively long tubes. There were several reasons for feeling that this might be done in the HGCR-3 design, whereas it was not feasible for the GCR-2. First, the principal barrier to heat transfer is on the gas side of the tubes, and the high gas pressure made possible by a small-diameter pressure vessel should increase the gas-side heat transfer coefficient by about a factor of 3. Second, the ceramic fuel elements should make it possible to double the mean temperature difference between the gas and the heat transfer surfaces. Third, the tube diameter in the heat exchanger could be reduced to perhaps 25% of the value used in the GCR-2. (The feedwater treatment should be sufficiently good so that scale formation should not present a problem with the smaller diameter tubes. The successful operation of a number of the newer coal-fired plants with 5/8-in.-i.d. tubes and pressurized-water reactor plants with 0.5-in.-o.d. tubes has demonstrated this.) The total effect of these three factors should make it possible to reduce the tube length for a once-through boiler from the 1000 ft used in the GCR-2 to around 100 ft. This in turn permits the use of a pure counterflow type of heat exchanger with long straight tubes coaxial with the reactor—heat exchanger—pressure vessel.

An over-all heat balance for the power plant is presented in Table 5. These data are for one of the most recent designs for a 500-Mw(e) coal-fired power plant and served as the basis for the steam generator design.

The steam generator design calculations are summarized in Table 6. While a variety of tube lengths and spacings both with and without fins were considered,[9] the values chosen seemed to represent the most promising

Table 5. Steam Cycle for a 500-Mw Gross-Electrical-Output Coal-Fired Steam Plant (TVA Colbert Plant Unit No. 5)

Point in System	Temperature (°F)	Pressure (psia)	Enthalpy (Btu/lb)	Specific Volume (ft^3/lb)	Change in Enthalpy (Btu/lb)	Steam Flow (lb/hr)
Economizer inlet	520	2500	510.5	0.0209	218.9	3 429 600
Boiler inlet	667	2490	729.4	0.0286	365.7	3 429 600
Superheater inlet	666	2460	1095.1	0.1347	398.7	3 429 600
Superheater outlet	1050	2415	1493.8	0.3352		3 429 600
Reheater inlet	650	475	1330	1.3033	191.6	2 421 000
Reheater outlet	1000	428	1521.6	1.9827		2 421 000
Turbine outlet	91.7	1.5 in. Hg	1026	444.9		2 521 000

Heat input = $983.3 + 191.6 \frac{2521}{3429} = 983.3 + 141 = 1124.3$ Btu/lb of feedwater

Gross turbine output = 509 Btu/lb

Gross thermal efficiency = 45.15%

combination if the over-all height is to be kept to a minimum consistent with a good balance between pumping power costs and capital charges. It is important to keep the steam generator height to a value not greatly in excess of that required to give good thermal convection for afterheat removal because additional height increases the amount of steel and concrete required for the containment vessel and shield and makes construction more difficult. In keeping with modern practice, a reheater has been included to increase the cycle efficiency and to minimize the steam moisture content in the lower turbine stages and thus reduce turbine maintenance. The design has been proportioned so that the gas flows in parallel through the superheater and reheater regions (see Figs. 9 and 15) in such a way that its temperature is uniform over any given cross section normal to the flow.

The reheater has the further advantage that it provides better temperature and heat flux distributions (Figs. 16 and 17) through the length of the steam generator by making the difference between the metal temperature and the gas temperature more uniform, particularly in the superheater region. With a reheater it was possible to remove half of the total heat in the superheater and reheater region and thus reduce the

Table 6. Summary of Design Calculations for a 4800-Tube Steam Generator Plus a 900-Tube Reheater for the HGCR-3

	Economizer	Boiler	Superheater	Reheater
Tube inside diameter, in.	0.625	0.625	0.625	1.25
Tube outside diameter, in.	0.825	0.825	0.825	1.825
Tube internal surface, ft^2/ft of tube	0.164	0.164	0.164	0.328
Tube mean wall area, ft^2/ft of tube	0.190	0.190	0.190	0.355
Tube gas side surface, ft^2/ft of tube	1.5	0.216 to 1.5	0.216	0.383
Water-side flow passage area, ft^2	10.2	10.2	10.2	7.68
Gas-side flow passage area, ft^2	49.5	49.5	49.5	36.6
Water-side specific volume (mean), ft^3/lb	0.024	0.08	0.235	1.65
Gas-side specific volume (mean), ft^3/lb	0.2825	0.327	0.393	0.384
Water-side velocity, ft/sec	2.24	7.48	21.95	150
Gas-side velocity, ft/sec	30.95	35.8	24.7	24.7
Water-side dynamic head, psi	0.0225	0.0754	0.221	1.485
Gas-side dynamic head, psi	0.366	0.422	0.167	0.167
Water-side equivalent diameter, in.	0.625	0.625	0.625	1.25
Gas-side equivalent diameter, in.	0.4 (2.32/6)	0.45 (1.89/4)	0.4	0.4
Water-side length-to-diameter ratio	41.1	302	837	400
Gas-side length-to-diameter ratio	600	450	1200	1200
Water-side pressure drop, psi	0.18	0.45	3.7	12
Gas-side pressure drop, psi	4.4	3.8	4.0	4.0
Water-side inlet temperature, °F	520	667	666	650
Water-side outlet temperature, °F	667	666	1050	1000
Gas-side inlet temperature, °F	786.3	1011.8	1350	1280
Gas-side outlet temperature, °F	650	786.3	1011.8	1011.8
Log mean temperature difference, °F	124	213	322	322
Water-side flow rate, lb/sec	953	953	953	700
Gas-side flow rate, lb/sec	5430	5430	5430	5430
Gas-side flow rate, ft^3/sec	1484 (out)		2455 (in)	
Water-side film conductivity (u), $Btu/hr \cdot ft^2 \cdot °F$	1300	5000	276	270
Gas-side film conductivity (u),[a] $Btu/hr \cdot ft^2 \cdot °F$	250	275	210	210
Water-side film resistance (1/u)	0.00077	0.0002	0.0036	0.0037
Gas-side film resistance (1/u)[a]	0.0012	0.0010	0.0036	0.0036
Wall film resistance (1/u)	0.0004	0.0004	0.0004	0.0004
Fouling factor (1/u)	0.0005	0.0005	0.0005	0.0005
Total film resistance (1/U)	0.0029	0.0021	0.0081	0.0082
Total film conductivity (U)	345	475	124	122
Heat transferred, Btu	717×10^6	1253×10^6	1371×10^6	483×10^6
Tube length, ft	21.4	15.7	43.6	41.6
Heat exchanged, %	19.49	32.5	35.48	12.53
Area required, ft^2	16 800	12 400	34 300	12 300
Number of tubes	4800	4800	4800	900

[a]Includes allowance for fins.

extreme variations in gas-to-metal temperature difference that have prevailed in many steam generators for high-temperature gas-cooled reactors.

While not evident in Table 6, the high gas temperature in the feedwater region makes possible a high heat transfer coefficient on the water side through the central and upper portion of the economizer in spite of the low water velocity there. This comes about because, if the tube wall temperature tends to exceed the boiling point of the water, i.e., about 650°F, local boiling will occur. Thus the metal temperature will probably not exceed about 670°F at any point in the economizer; the detail design

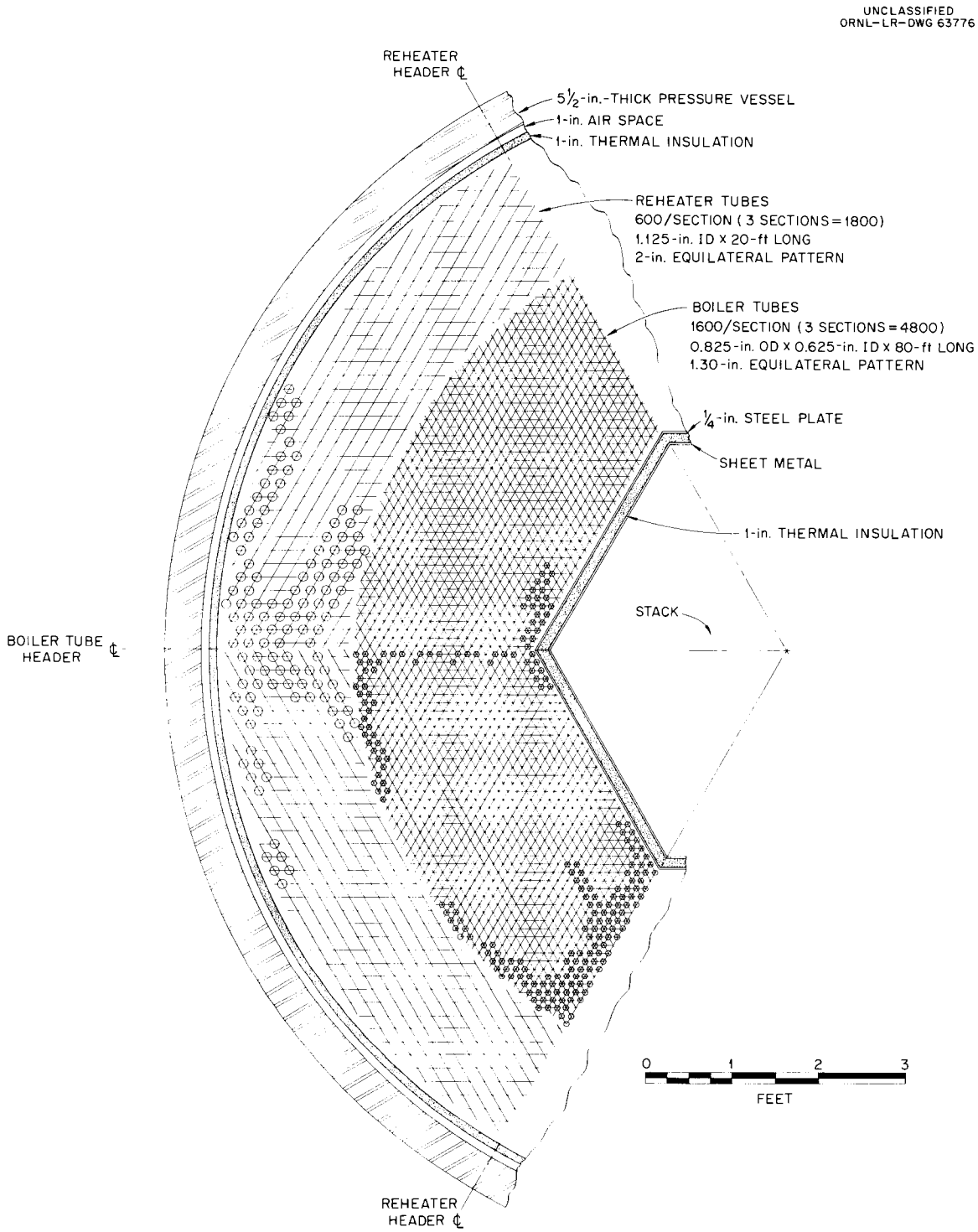

Fig. 15. Horizontal Section Through the HGCR-3 BeO Core–Steam Generator Unit Showing the Reheater Region.

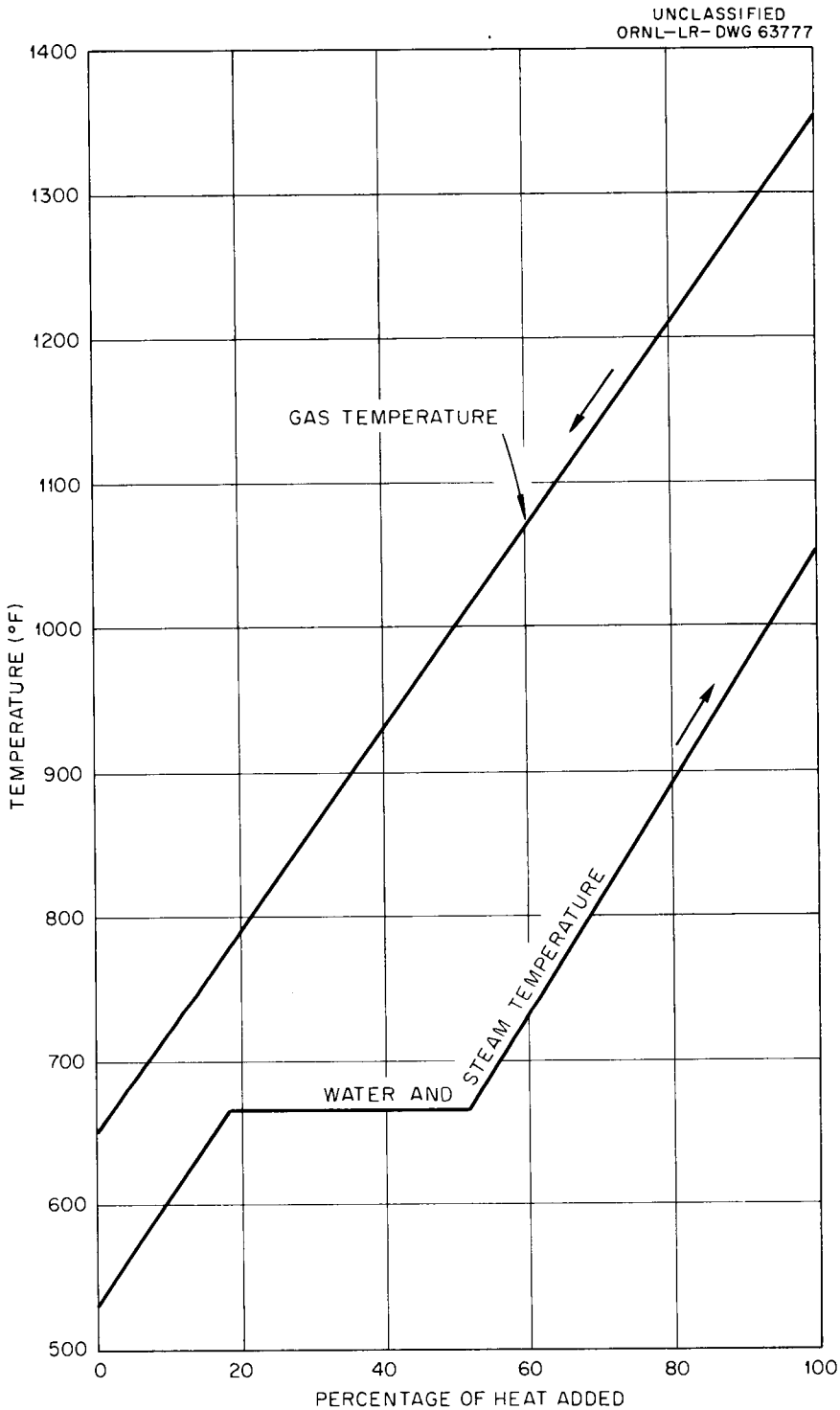

Fig. 16. Temperature Distribution in the HGCR-3 Steam Generator.

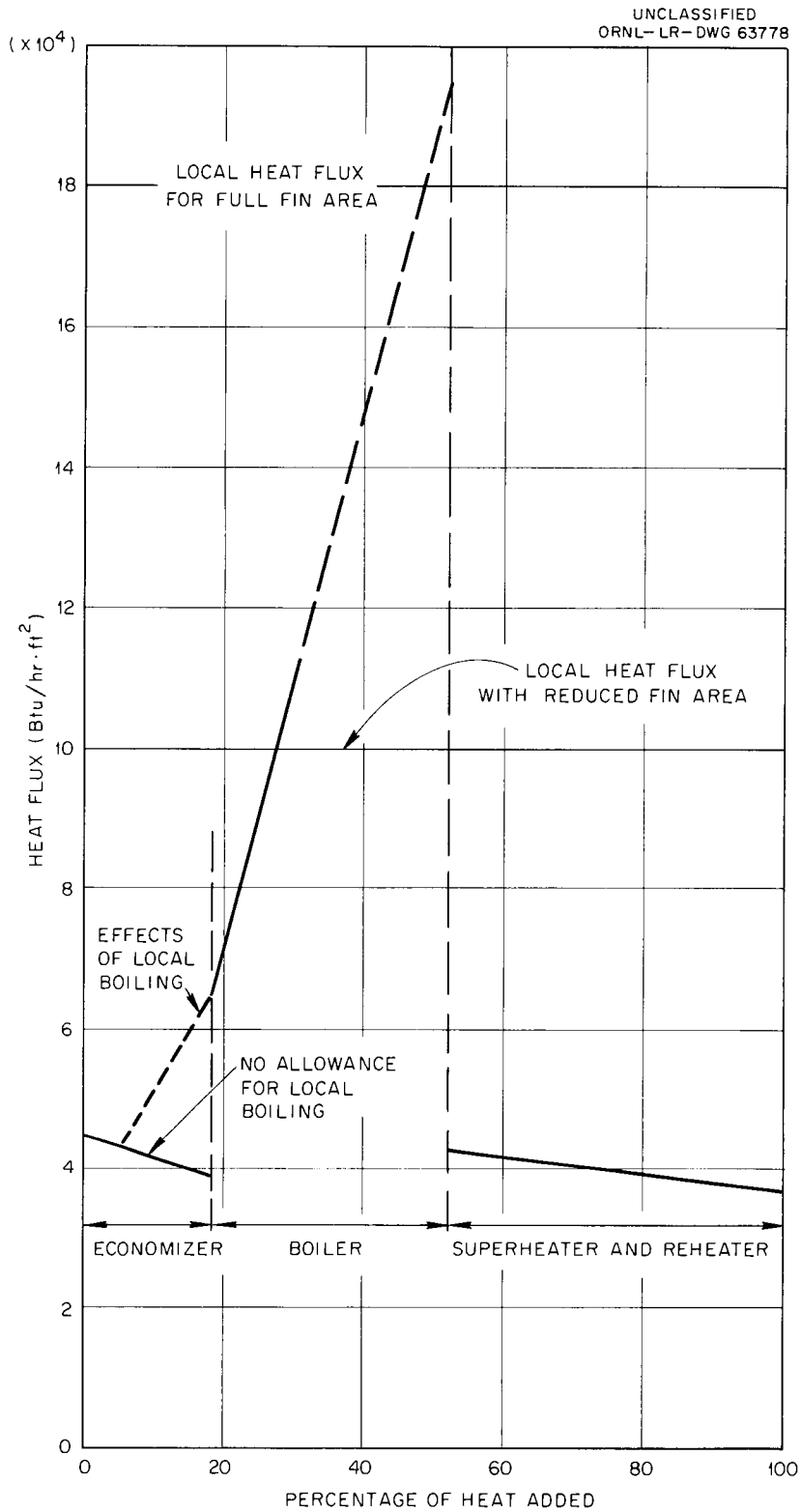

Fig. 17. Local Heat Flux Distribution in the Steam Generator Showing the Effects of Local Boiling in the Economizer and Reductions in Fin Area in the Boiler.

ought to take this into account. This means that good heat transfer performance can be obtained throughout the economizer except for the very lowest temperature portion; see Fig. 17.

An important set of problems arose in the course of the design of the steam generator in connection with the number of tube penetrations through the pressure vessel. In the design chosen it was found that it was very difficult to provide good access to the thousands of tube penetrations which would have been required had no manifolds been employed within the pressure vessel. Further, the assembly time required for the installation of this large number of individual tubes would have been excessive. Because of these factors it was decided to make use of manifolds within the pressure vessel. In view of the impracticality of repairing a leak within the pressure vessel it was decided that no more than 0.5% of the total number of tubes in the steam generator should be collected in any one manifold. Thus a leak in a small bundle of small tubes would result in no larger percentage loss in steam capacity than would have been the case with a few large tubes. Thus the design was prepared using from 20 to 30 tubes per tube bundle. With this arrangement a total of 196 tube bundles was required for the main portion of the steam generator, while 90 bundles were required for the reheater. The time required to make the welds between the tubes penetrating the pressure vessel and the pressure vessel thermal sleeves was thus cut to a reasonable value. The pressure vessel could be completed except for a hole approximately 3 to 5 ft in diameter in the top, and the tube bundles could be inserted through this opening. The tube bundles for the reheater would be installed first and the assembly built in toward the center. The hexagonal flue at the center would be installed last. It would probably be best to make the tube spacer grids in segments which could be installed with the tube bundles. The spacer grids could be tacked to fittings projecting from the wall of the main pressure vessel and need not be welded to any of the tubes in the bundles.

An important feature of the proposed design is that the tubes are supported from the top in simple tension. Differential expansion between the tubes and the pressure vessel is accommodated at the bottom of the

tube bundle by incorporating a horizontal run in the pipe from the tube manifold to the pressure vessel wall. This pipe is relatively small in diameter and hence relatively flexible so that the resulting bending stresses can be kept elastic.

Pressure Vessel

Because of shipping considerations it is desirable to keep the pressure vessel diameter to 14 ft or less and thus permit shop rather than field fabrication. For plants up to 200 Mw it might be possible to build a complete reactor—heat exchanger—pressure vessel assembly at the fabricator's plant and to include the normalizing heat treatment before shipment. The BeO could then be installed after the erection of the steam generator—pressure vessel assembly at the site.

Provisions were made for cooling the pressure vessel with gas bypassed from the core inlet. A thin annular channel was provided between the pressure vessel and an inner shroud covered with thermal insulation to insulate the pressure vessel from the hot gas in the core and steam generator. This bypass stream would flow upward to the top of the pressure vessel, where it would mix with the hot gas from the reactor core at the inlet to the heat exchanger. The thickness of the thermal insulation outside the vessel and the cooling gas flow would be adjusted so that the temperature rise in the cooling gas stream could be held to about 50°F so that no point in the pressure vessel would exceed 700°F. Shrouds would have to be provided around the steam generator tubes where they penetrate the pressure vessel wall to isolate the pressure vessel cooling gas stream from the hot gas passing through the heat exchanger. These could be conical in form and welded to the pressure vessel insulating liner in such a way that the bases of the cones would be at the liner. The small truncated end of each cone should have a diameter about equal to the bore of the hole in the pressure vessel for the tube penetration. The shroud assembly with these truncated conical shroud projections could be lowered into the pressure vessel, and the projections could be tack-welded to the vessel.

Blowers

The reactor—steam generator—blower configuration chosen for use with the BeO-moderated core represents a major departure from the arrangement used for the GCR-2. Several factors were responsible for the change. The most important was the size and weight of the drive motors required and the difficulty of enclosing them within a pressure vessel adequate to withstand an internal pressure of 1000 psi. At the same time, the vibration problem seemed to be very serious. It was not believed wise to plan on the use of bellows joints for the 1000-psi pressure. This implied that the rotating mass contained within the pressure envelope should be kept as low as possible to minimize the vibration exciting forces within that envelope. Further, the rotating masses should be as close to the vessel support points as possible. These considerations led to the configuration chosen. An important advantage of this arrangement is the relatively small size of the blower because this eases the handling problem if replacement is required after the system becomes contaminated.

The stresses in the pressure vessel and ducts arising from the weight loads of the complete reactor, heat exchanger, and pressure vessel assembly are substantially less than the pressure stresses in most regions, and there appears to be no region for which the dead load stresses are as great as those induced by the internal pressure. The detailed design of the structure in the vicinity of the spherical casing for the blower is based on the use of a large shear web which couples the horizontal and diagonal ducts from the main pressure vessel to the mounting foot upon which the weight of the whole assembly rests. Details of the design are shown in Fig. 18. Three blowers were chosen for the plant so that the weight load of the system would be evenly distributed between the three mounting feet in a clearly defined fashion. One of the three mounting feet would be bolted down while the other two would be provided with rollers to accommodate about 2 in. of thermal expansion. (The rollers should be placed in the plane of the rotor so that lateral vibration forces would be absorbed without inducing moments in the ducts. This is standard practice in bridge design.)

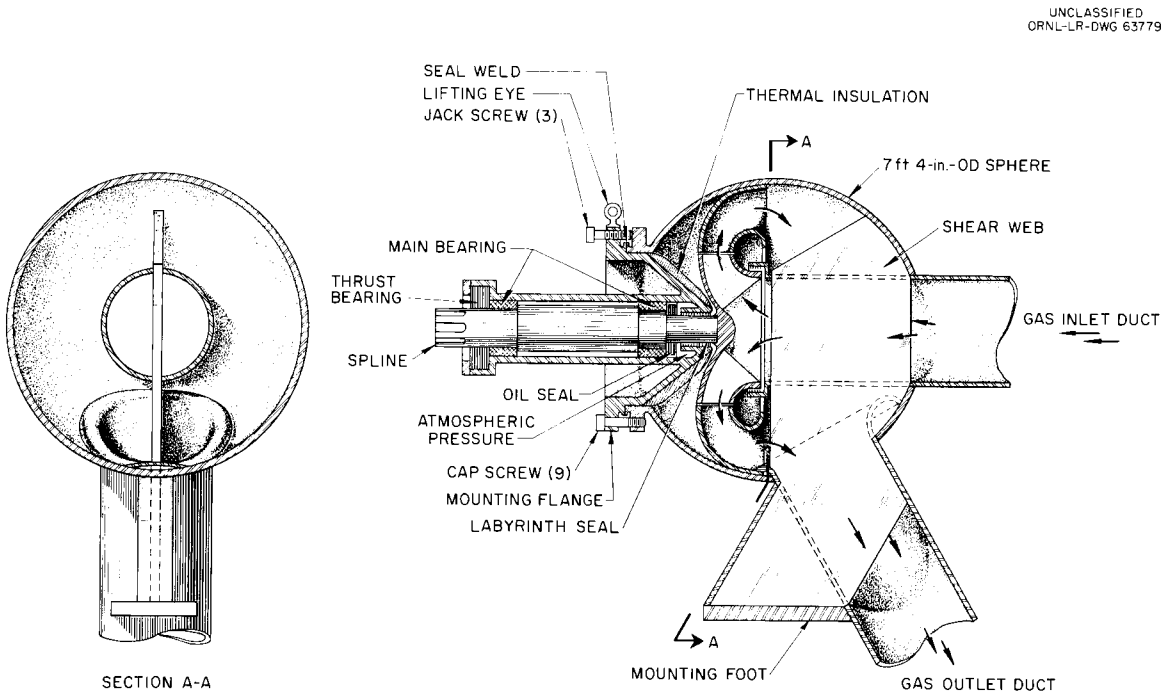

Fig. 18. Sections Through Blower Showing Support Structure.

The two ducts coupling the blower to the main pressure vessel constitute a redundant structure that might lead to substantial locked-in stresses arising from the weld sequence used during fabrication. These residual locked-in stresses would be relieved by the stress relief heat treatment carried out after completion of the vessel.

Provision has been made for blower removal through the use of the flanged joint shown in Fig. 18. Should it be necessary to remove a blower, the splined quill shaft between the blower and the drive motor would be disconnected and moved to one side after removal of some blocks plugging the aperture provided in the shield for that purpose. The cap screws in the blower mounting flange could then be removed with long-handled wrenches from the outside of the blower shield. A hoist with a strain-gage dynamometer would then be connected to the lifting eye on the blower flange, and the tension in the lifting cable would be increased to a value such that the load in the cable would be equal to the weight of the blower shaft bearing, seal, and rotor assembly. The three

jack screws provided in the mounting flange would be operated to withdraw the blower assembly from the main casing. This assembly would be dropped into a coffin prepositioned beneath the blower; the opening would then be closed or a new blower would be installed. A lid would be placed on the lead coffin and the blower-rotor assembly could be removed for inspection and maintenance.

Of the many types of seal considered for the blower shaft, the most reliable appeared to be the conventional labyrinth-type used on steam turbines. Seals of this type require a continuous leakage flow through the labyrinth. The arrangement contemplated makes use of a CO_2 buffer gas stream supplied from the CO_2 gas cleanup system. A portion of this buffer gas, which would be supplied at perhaps 1025 psig, would leak into the main CO_2 gas system, while the balance would leak outward toward the atmosphere. To minimize the pumping power required to recompress this gas leakage, bleed-offs would be placed in the labyrinth at pressure levels of roughly 300 and 100 psi, as well as at essentially atmospheric pressure at the outboard end where a very low-leakage oil-lubricated face seal would minimize gas leakage. The various bleed flows would be carried to the appropriate stages in the CO_2 compressor system for compression to about 1050 psia and returned to the system. In the event of a failure in the latter system, operation could be sustained for as much as several days by making use of CO_2 from the main storage system. It should be noted that, for this type of seal, CO_2 is more desirable as a working fluid than helium because CO_2 requires less pumping work to handle the leakage through the seal.

There are no rubbing surfaces in a labyrinth seal, so there should be no wear. While a face seal is provided to minimize the leakage of oil from the main bearings on the shaft into the cavity adjacent to the labyrinth seal, such seals are quite reliable when oil-lubricated. Even if the seal deteriorated, an increase in oil leakage into this zone would simply increase the load on the CO_2 cleanup equipment. Note that the CO_2 leaking through the labyrinth seal to the atmospheric pressure end of the shaft would be uncontaminated CO_2 from the buffer gas supply system. Further, essentially none should escape to the atmosphere.

An important consideration in the design of the blower was the type of prime mover to be employed for the blower drive. Electric motors, operating from variable-frequency generators driven by steam turbines, were used in the initial layout to provide control of the gas flow rate and thus eliminate a requirement for valves.

6. THE HGCR-4 BeO-MODERATED AND HGCR-5 GRAPHITE-MODERATED REACTOR AND STEAM GENERATOR UNITS

In January 1961, work was initiated on revised designs. The first step was to review the studies on reactor physics, fuel cycle costs, the steam generator, and the fuel-handling equipment which were launched after these problems were highlighted by the HGCR-2 and HGCR-3 design studies. The basic configuration employed for the beryllia reactor showed great promise, particularly in view of the careful study of configurations conducted in conjunction with the pebble-bed reactor design and presented in a report covering that work.[5] The reactor physics studies showed that a substantially larger core ought to be employed in order to reduce the fuel cycle costs and that, for the same conversion ratio, the BeO should give a core-plus-reflector diameter about 4.6 ft less than for graphite. Cost studies showed that the difference in over-all capital charges and fuel cycle costs between the beryllia and graphite cores should be small, although a little higher for the beryllia cores. Preliminary work on the graphite oxidation problem both in England and in the U. S. indicates that trace amounts of CO_2 and water vapor in helium are likely to give serious difficulty with mass transfer of carbon from a graphite core to the steam generator, and, in the event of a major system rupture, oxidation of a graphite core would introduce a serious hazards problem. On the other hand, recent test data indicate that the beryllia may be seriously damaged by fast-neutron irradiation[10] and that these effects may be much more serious than those associated with graphite shrinkage under irradiation. In view of the many uncertainties attending the relative merits of graphite and BeO for a revised design, it seemed best to prepare two similar designs which would incorporate the improvements indicated by the previous year and a half of effort and would point up the relative merits of each together with the problems involved. The BeO-moderated, CO_2-cooled reactor was designated the HGCR-4, while the graphite-moderated, helium-cooled unit was designated the HGCR-5. Dimensional and performance data for each of the two plants are given in Table 2. Since relatively small changes in the design for one moderator-coolant combination

serve to give a well-proportioned system for the other, drawings were prepared only for the helium-cooled graphite reactor core, and vertical and horizontal sections through the reactor building are shown in Figs. 19 through 23.

Selection of Core Size

The first step in preparing each of the new designs was to choose a reactor core composition and diameter. Reactor physics studies,[11-14] together with studies of fuel cycle costs and capital charges,[15] clearly implied that the bulk of the conversion ought to be accomplished in the core, partly to minimize fuel fabrication costs and partly to minimize changes in reactivity and hence in the number and size of the control rods required. While the design chosen calls for thorium in the outer portion of the reflector to minimize neutron leakage losses and improve the conversion ratio, it was found that this will not help materially to reduce fuel cycle costs unless the reprocessing costs of this material can be kept low. The most significant curves in the study are those presented in Fig. 24 which show the sum of the capital charges dependent on core size and the fuel cycle costs as a function of core diameter for a typical series of reactor cores. It must be emphasized that the costs indicated in Fig. 24 were estimated for third-generation reactors and include no allowances for either top charges or contingencies. They were intended to show the relative charges rather than absolute values. The curves indicate that, for a 500-Mw electrical output plant, a BeO core should have a diameter of about 12.5 ft, while a graphite core should have a diameter of about 15 ft.

The reflector must serve the dual function of reducing neutron losses from the core and assisting in the protection of the pressure vessel from fast neutrons. The latter requirement can be satisfied by several combinations of materials, including BeO, graphite, lithium hydroxide, boron-bearing material, alumina, and steel. Graphite is the logical reflector material for helium-cooled graphite cores. It could also be used in the outer regions of the reflector for BeO cores, but it would have to

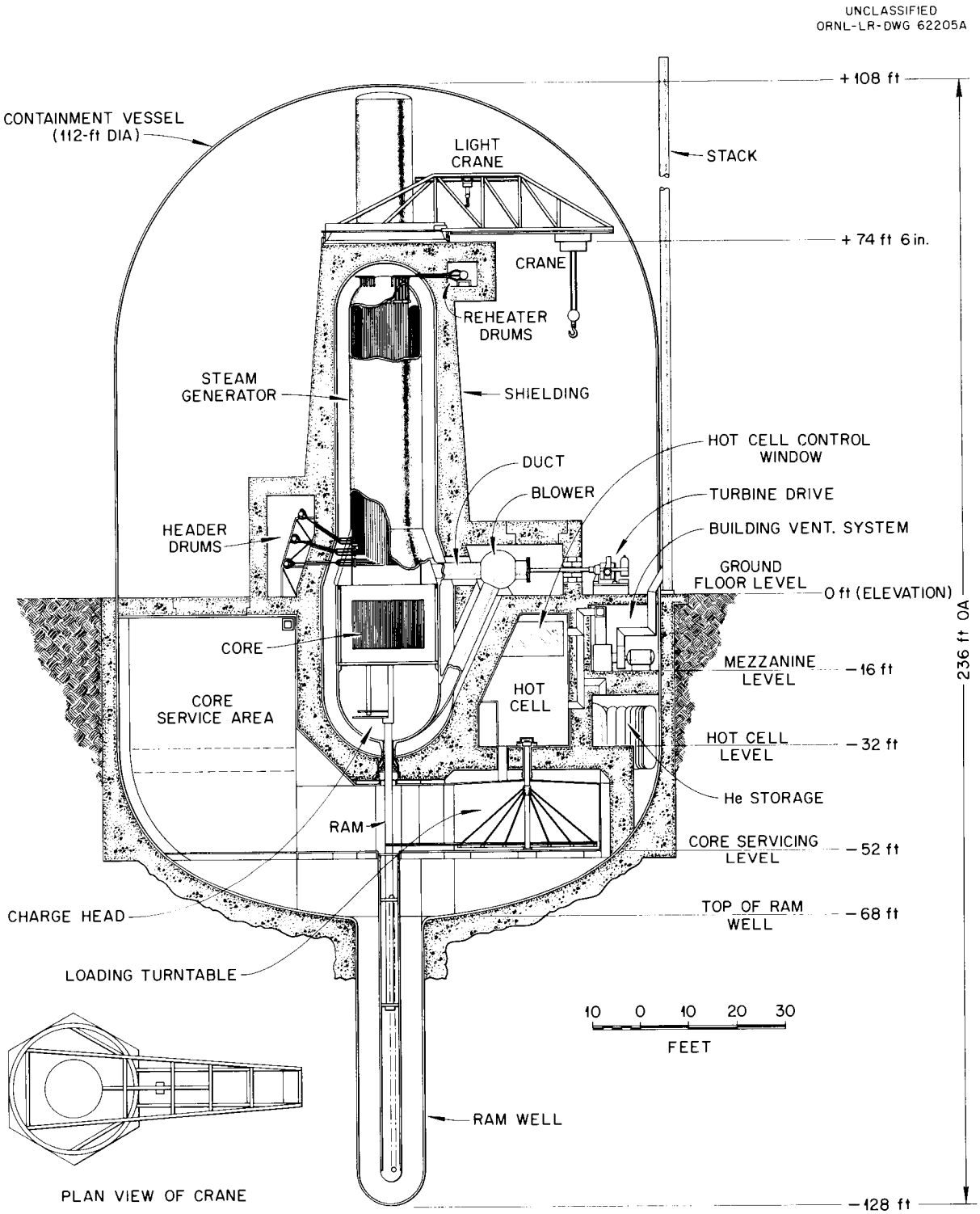

Fig. 19. Vertical Section Through HGCR-5.

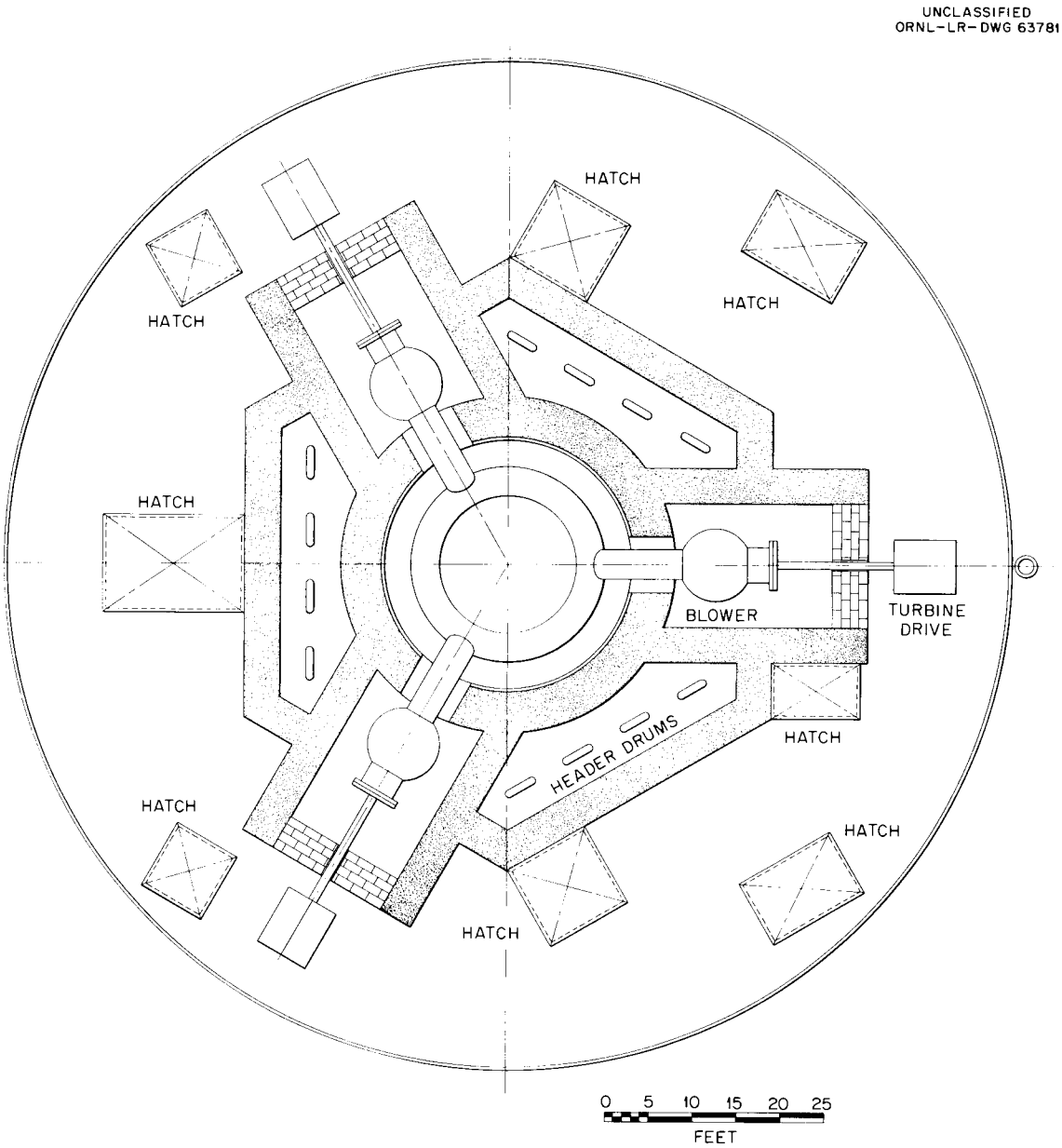

Fig. 20. Horizontal Section Through HGCR-5 at Ground Floor.

be kept to a temperature below 900°F to avoid difficulty with CO_2-CO reactions. The high cost of BeO makes it desirable to use a cheaper material for pressure vessel protection. Steel appears to be the least expensive of the materials that might be used that would present no problem in compatibility or installation, but it would not help the neutron economy of the reactor. A layer of boron- or lithium-bearing material

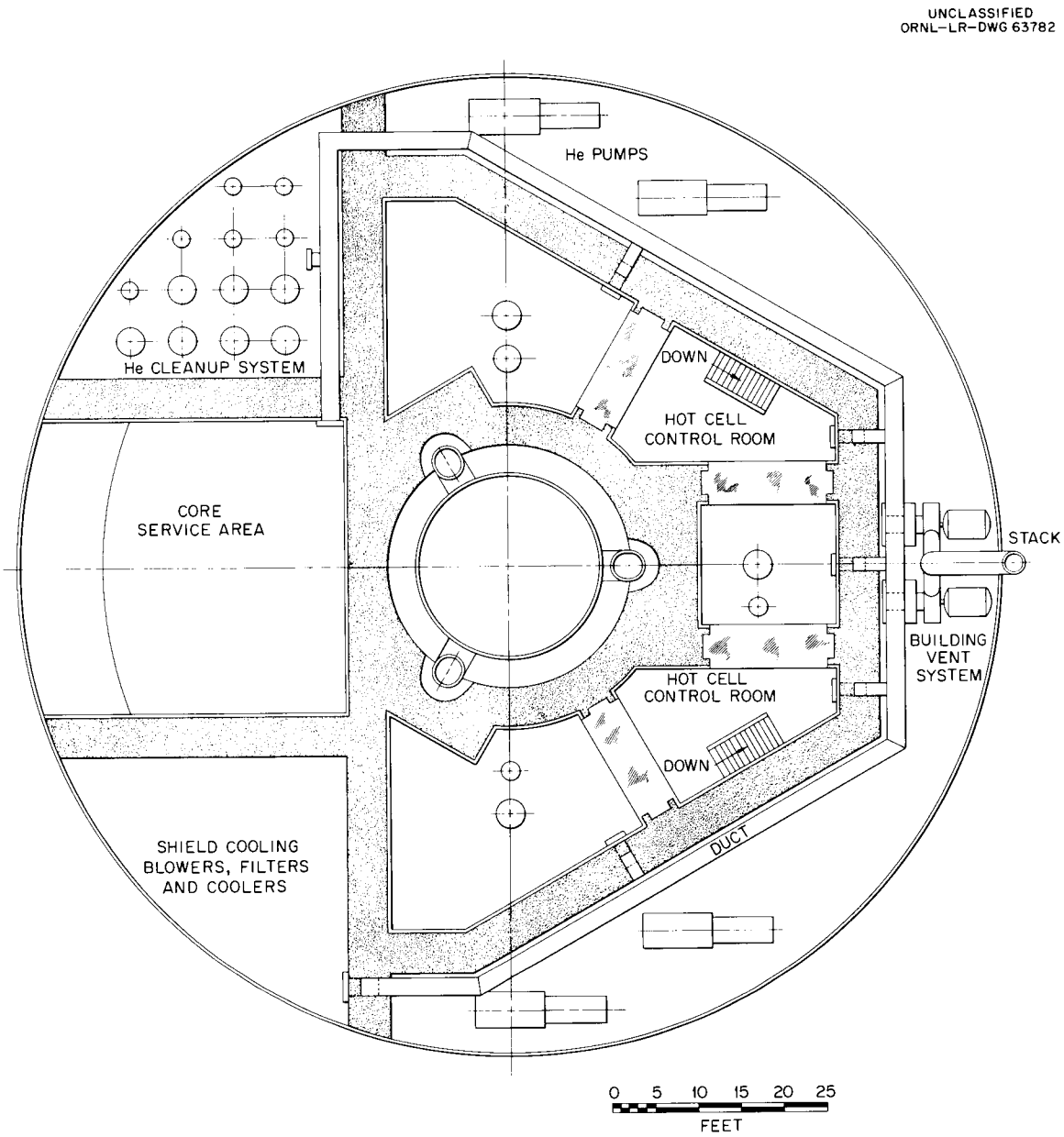

Fig. 21. Horizontal Section Through HGCR-5 at Mezzanine Level.

at the outer perimeter of the reflector seems very much in order to minimize the production of hard gammas and the resulting problems associated with both pressure vessel heating and shielding. The latter are particularly important in the vicinity of ducts passing through the shield. Lithium hydroxide appears attractive on paper, since it is very effective both in slowing down fast neutrons and in absorbing thermal neutrons.

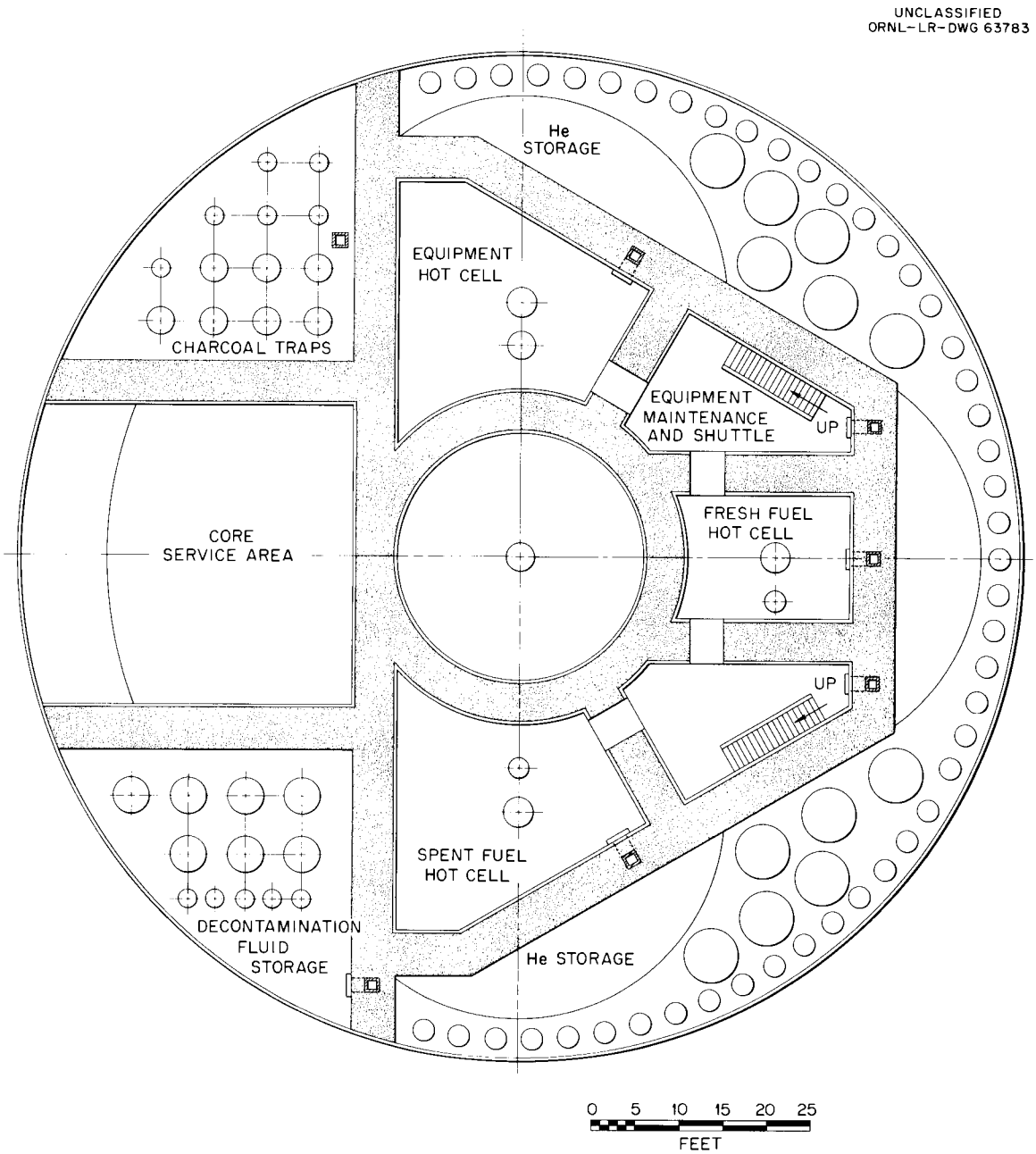

Fig. 22. Horizontal Section Through HGCR-5 at Hot Cell Floor.

However, it would have to be used at a temperature close to its melting point, and phase changes associated with melting and freezing might cause cracking of the cans used to contain it. For purposes of this study, the arrangement chosen for the BeO reactor was a 1.4-ft-thick beryllia reflector surrounded by a 6-in. layer of borated alumina, while that chosen

for the graphite reactor was 32 in. of plain graphite followed by 2 in. of borated graphite and 2 in. of steel.

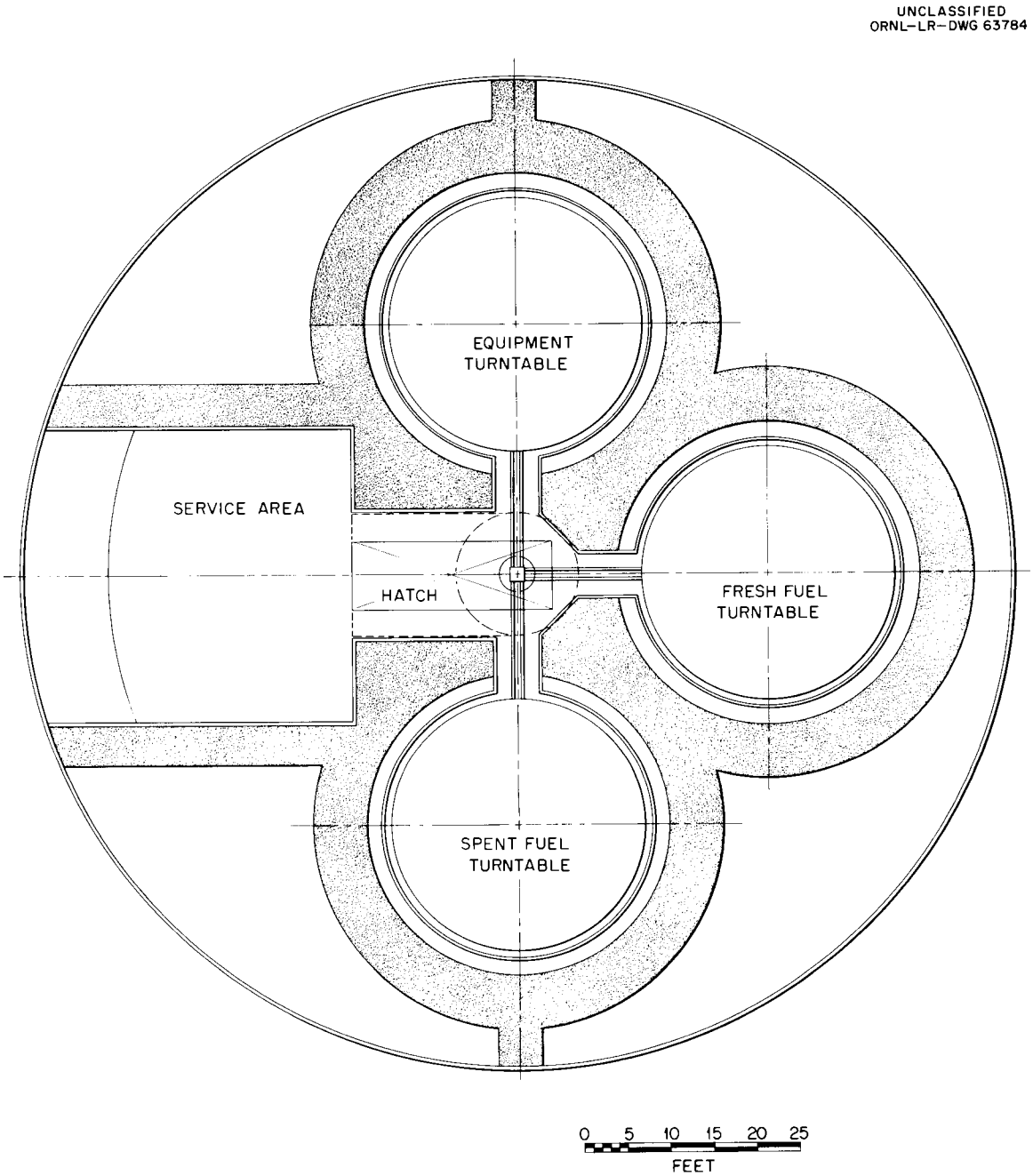

Fig. 23. Horizontal Section Through HGCR-5 at Core Servicing Floor.

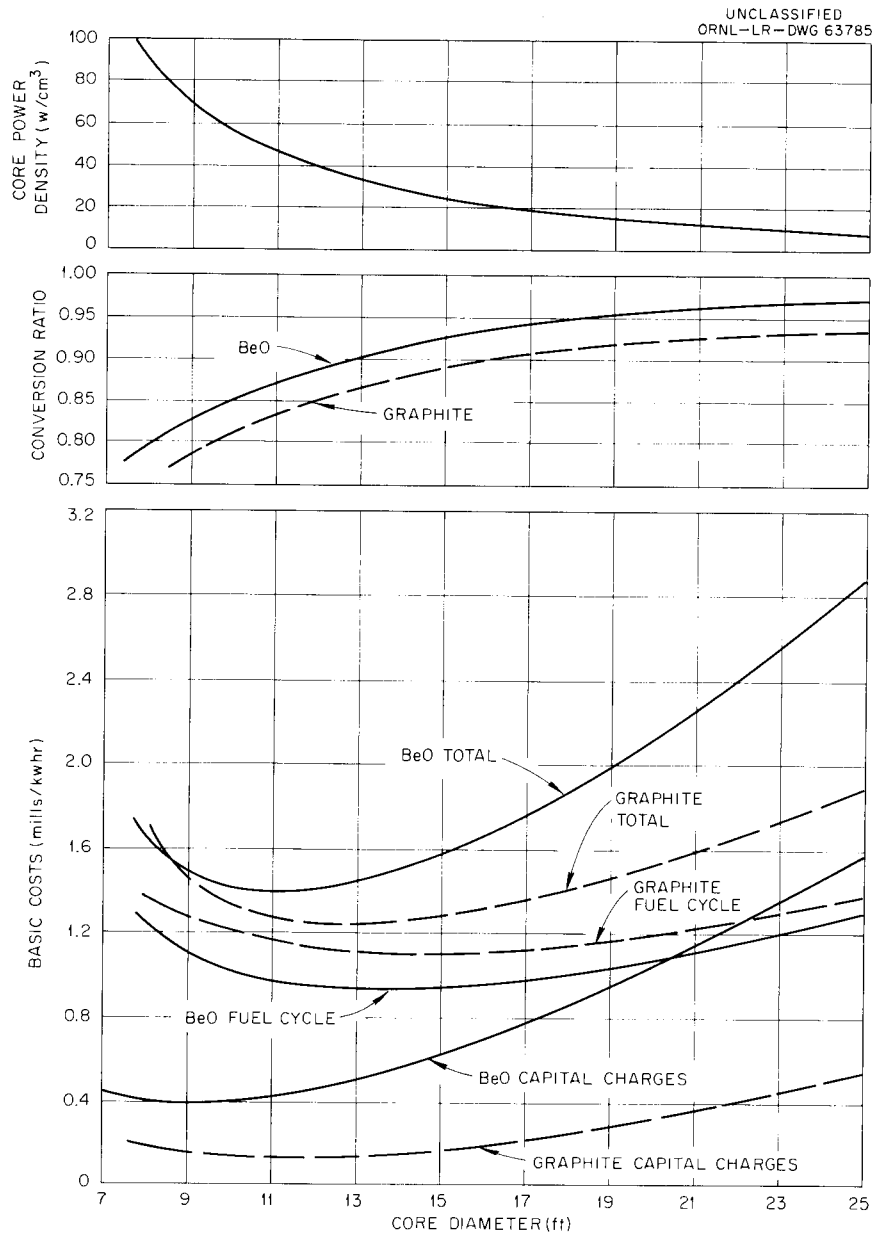

Fig. 24. Effects of Power Density on Fuel Cycle Costs and Capital Charges Directly Dependent on Reactor Core Diameter for a Typical Series of BeO and Graphite Reactors.

Moderator Structure

The BeO moderator block structure chosen for the HGCR-4 was the same as that described in the section on the HGCR-3. The graphite core for the HGCR-5 consists of tightly packed parallel hexagonal graphite columns

2.25 in. across the flats with a 1.51-in. hole through the center to form the fuel channel. Each column consists of three or four pieces, each aligned with the adjoining section by a counterbore-pilot joint. To help preserve alignment in the event of a crack it is also desirable to stagger the joints in adjacent columns so that they will not fall in the same vertical plane.

For a 14-ft-diam reactor core the radial difference in thermal expansion between the graphite and the steel support plate will run about 1/4 in. while the graphite shrinkage will contribute an additional 1/8 in. The 3/8 in. of radial clearance (3/4 in. of diametral clearance) that will develop as a result of these two factors is objectionable for several reasons, including the possibility of abrupt shifts in the relative position of the graphite blocks which might occur under lateral shaking forces during an earthquake. These shifts could affect the control rod operation, and the core or support structure might be severely damaged if the blocks were allowed to "rattle" loosely.

The core design proposed for the HGCR-5 depends on flexibility in bending of the graphite columns themselves. Since a lateral force of 20 lb applied at the center of one of these rods would suffice to bow it about 3/32 in., and since this is only about one-fourth of the deflection at which breakage would be likely, it is possible to design the core as if it were a tightly bound bundle of leaf springs, each of which would be slightly bowed when unrestrained. The arrangement envisioned is shown in Fig. 25 with no restraint at the perimeter of the bundle. For rods 2.25 in. across the flats having a 3/32-in. bow, the diameter of a 20-ft-diam bundle would contract 10 in. if "cinched" from the free to the close-packed condition. To provide for differential thermal expansion, graphite shrinkage, and tolerances on the dimension across the flats, the design and installation would be made so that only about 7 of the 10 in. would be taken up in the "cinching" operation.

The graphite hexagonal rods will probably not be perfectly straight in production but will be bowed from 1/16 to 1/8 in. Since the maximum difficulty with shrinkage cracking will occur in the pieces close to the core-reflector interface, and since the differential shrinkage will tend

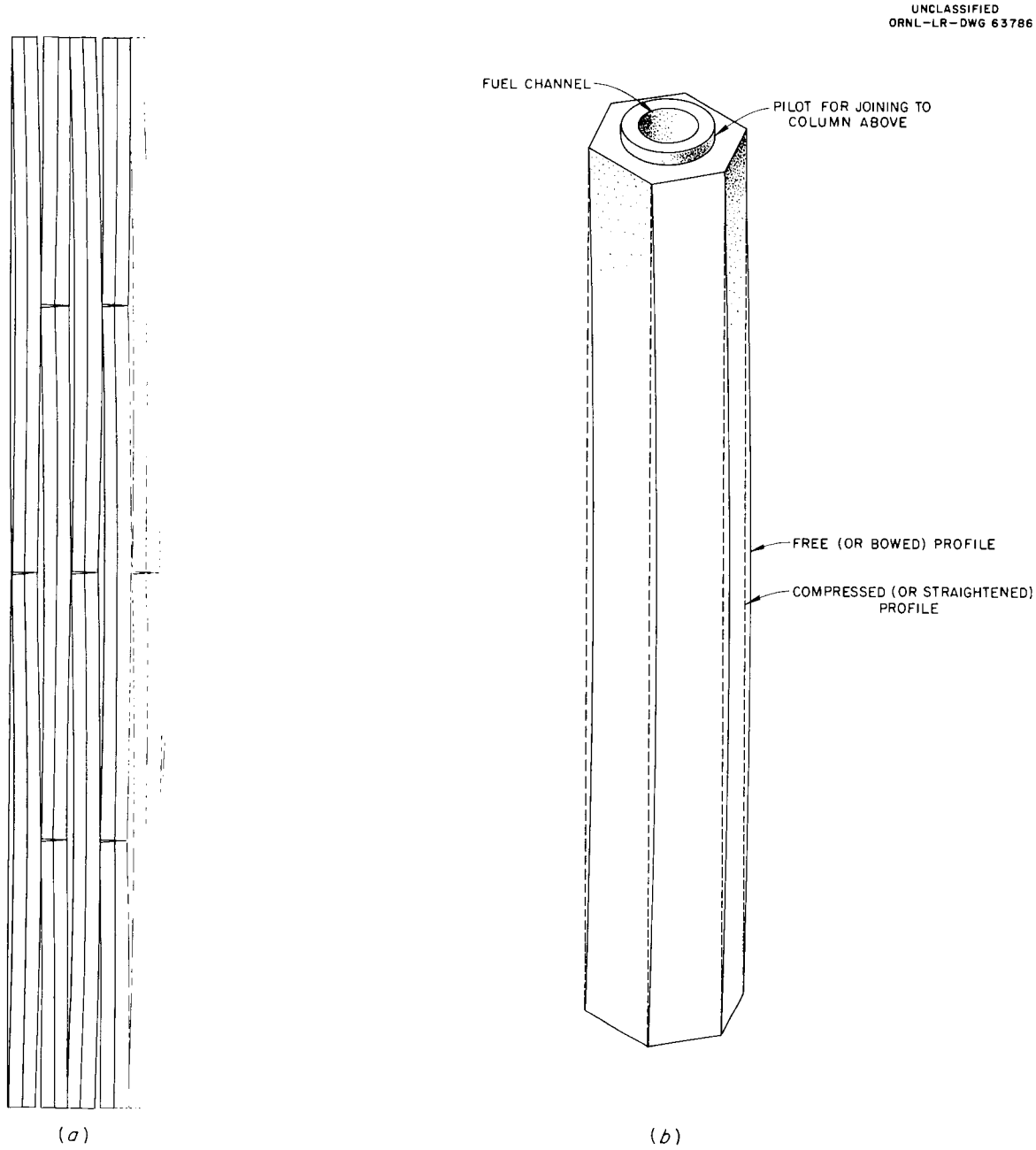

Fig. 25. (a) Vertical Cross Section Through a Core Showing Schematically the Manner in Which Bowed Graphite Blocks Can Be Mounted to Give an Elastic Moderator Structure. (b) Typical Graphite Block 5 ft Long and 2.5 in. Across Flats.

to cause these columns to bow inward toward the center, the pieces should be sorted and selected so that the more heavily bowed columns will be installed at the perimeter with the concave sides outward. In this way the initial effects of differential shrinkage across the columns will be to straighten them. Thus, if shrinkage cracking should prove to be a problem, the life of the graphite prior to the formation of cracks could be doubled by this procedure.

Several methods could be used to draw the columns together during installation. Special tools which would be analogous to a piston-ring compressor could be used to apply lateral loads and thus straighten out the columns to the desired degree during the installation and give a closely packed array under the initial cold condition. Probably a better approach, and one that would be suitable for replacing the graphite with remote-handling equipment, would be to glue together bundles of rods in a press using a low-ash cement that could be baked off at 300 to 400°F. This would minimize the number of pieces to be installed and would avoid tricky operations inside the pressure vessel. In either case, the steel support structure would expand on heating and allow the spaces between the graphite columns to increase somewhat; that is, the gap between adjacent columns would open up about 0.010 in. near the bottom of the reactor and about half of that near the top. This expansion would be readily absorbed by the spring action of the bowed columns. Graphite shrinkage under irradiation would be responsible for a further increase of about 0.003 in. in the gaps between blocks. This also would be easily absorbed by the spring action of the bowed columns.

The structure of the graphite reflector could be similar to that for the core except that the hole through each block would be small to restrict the coolant flow to that required for gamma heat removal.

Control Rods and Drives

Provisions for the control rods and drives always present many problems. Both top and bottom rod drive installations were considered with the rods suspended on cables in the former and mounted on ball screw

drives in the latter. To avoid interference with fuel-handling operations, it seemed best to operate the rods from the top of the shield over the steam generator using the type of cable suspension and drive unit employed for the EGCR. While the distance from the rod drive equipment at the top of the shield to the bottom of the reactor is 80 ft, this should be compared with corresponding distances of 60 to 70 ft in the British Calder Hall and CEA gas-cooled reactors. Nineteen rods, 1 3/4 in. in diameter on 2-ft equilateral triangular centers, have been provided. These operate in channels formed by omitting moderator blocks from the appropriate positions in the lattice. The rod drive cables would be operated through 2-in.-i.d. tubes which would extend upward through the steam generator tube matrix from the plenum over the top of the reactor to the top of the pressure vessel. These tubes would serve to guide the rods through this region during installation or removal. Each rod would consist of a stainless steel tube filled with boron carbide at the upper end and borated alumina at the lower end.

Selection of System Pressure

The pressure vessel diameters required for the larger cores favored by fuel cycle costs pose extremely serious pressure vessel fabrication problems if the system pressure is kept to 1000 psi. There is clearly a strong incentive from the standpoints of pressure vessel cost, integrity, and fabrication to keep the pressure vessel wall thickness to 4 in. or less. A cooling gas system pressure of 1000 psi was chosen for the HGCR-3 since it gave low pumping power costs for both the small high power density cores and the steam generator, and yet the pressure vessel thickness was only 4 in. Increasing the core size to reduce the specific power in the fuel and hence fuel cycle costs eases the pumping power problem for the core. Further, the steam generator optimization studies[16] showed that, while a larger footage of tubing is required at a reduced pressure, shell cost is reduced sufficiently that the over-all steam generator cost is not far from a minimum if the cooling-gas system pressure is dropped to about 500 psi. This effect is shown in Fig. 26. Consequently, the

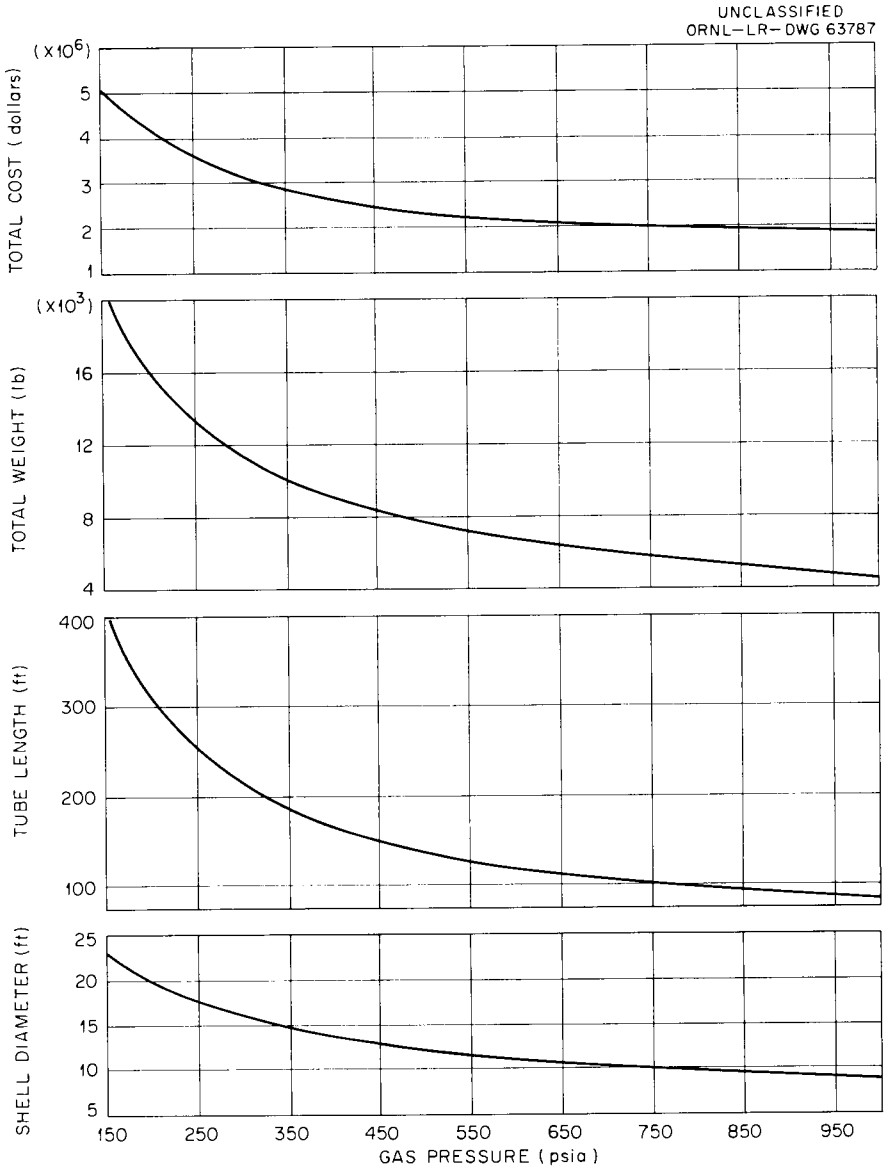

Fig. 26. Effect of Gas Pressure on Cost and Size of an Axial-Flow Bare-Tube Steam Generator for a 500-Mw Electrical Output with a Thermal Cycle Efficiency of 0.40.

pressure vessel wall thickness was kept to 4 in. This gave pressures of 500 and 640 psi, respectively, for the graphite and BeO reactors and a well-proportioned pressure vessel for the reactor and steam generator unit.

Blowers

The reduced system pressure coupled with the reduced pressure drop across the larger core favors the use of mixed-flow blowers designed for the same sort of an installation as employed in Fig. 18. This seemed particularly suitable for use with a steam turbine drive system, which is well adapted to the higher shaft speeds required.

The drive system chosen makes use of two-stage turbines driven by steam bled from the pipes going to the reheater. These turbines exhaust to the upper-stage feedwater heaters. With this arrangement the extra footage of steam piping required is relatively small and is for relatively low-pressure, low-temperature steam. Only a few additional penetrations through the containment shell are needed. The system should have an inherently high reliability, and the capital charges and operating costs should be lower than for any of the other blower drive systems considered. Low-pressure noncondensing turbines are fairly widely used for industrial applications. While their efficiency is only about 70%, they are reliable, inexpensive, present no difficult seal or lubrication problems, and are very compact.

Steam Generator

The once-through boiler with its tube axes parallel to the axis of the pressure vessel, as proposed for the HGCR-3, showed such promise for gas-cooled reactor applications that a study was initiated to investigate the effects of extended surface, gas temperatures and pressures, steam conditions, and tube diameter on the size, weight, and cost of this type of steam generator. An analytical technique was developed to give an explicit solution for the tube length for any given set of conditions. The results of this study[16] showed that an axial tube unit is smaller and less expensive than a cross-flow unit for gas pressures above 300 psia and that bare tubes are superior to finned tubes for the axial-flow designs. Discussions with boiler manufacturers indicated that, for the high-purity feedwater required for once-through boilers, water-side deposits should

not be a problem, and a tube outside diameter of 0.5 in. is both feasible and proper for a nuclear plant.

Configuration

In reviewing the initial results of the parametric survey on axial-flow steam generators, a number of features became apparent. First, straight tubes gave inconveniently tall units, particularly if mounted in a pressure vessel common to the reactor. A better layout can be obtained if the tubes are bent into the form of a U, since this cuts the over-all height in half. This approach utilizes the volume otherwise wasted in the central stack and has the advantage that the tubes are suspended from a zone in which the tube metal temperature should be under 700°F, thus greatly increasing the allowable stresses at the top of the tubes for supporting the dead weight loads. It also gives an extra degree of freedom in spacing the tubes; that is, the portion of the tubes in the economizer and the first part of the boiler can be closely spaced, while the tubes in the latter portion of the boiler, the superheater, and the reheater can be on more open pitch. This makes the heat flux distribution more uniform by increasing the gas-side heat transfer coefficient in the economizer and the initial portion of the boiler where the available temperature difference is low and reduces the heat transfer coefficient in the latter portion of the boiler, the superheater, and the reheater, where the temperature difference is large. In this way the metal temperature is kept close to the steam temperature in the high-temperature zone and the stress situation is eased.

With these considerations in mind, the relations derived in the initial work were modified to include a reheater to operate in parallel with the latter half of the boiler and the superheater. These components would be located in the central region, while the economizer and first half of the boiler would be located in an outer annulus. The design calls for hot gas from the reactor to pass upward through the superheater and reheater central section and return downward through the outer annulus containing the initial portion of the boiler and the economizer. This arrangement appears acceptable from the water flow stability standpoint,

since half-way through the boiler, where 50% by weight has been evaporated, the density of the steam-water mixture will be only 15% greater than that of saturated steam so that most of the stabilizing effects of vertical upward flow in the boiler will be retained. There would be no abrupt discontinuity in the water-side heat transfer coefficient between the boiling zone and the superheater, since at high pressures the high effective specific heat of saturated steam yields very high heat transfer coefficients on the water side which are almost as high as those which prevail in the boiling zone. The configuration chosen is shown in Fig. 19.

Design Analysis

In making the design analysis it was assumed that the length of the reheater tubes should be equal to that of the superheater plus the high vapor quality half of the boiler and that both the temperature drop and the pressure drop on the gas side should be the same for the two units. This left the tube diameter in the reheater and the tube spacing in both the reheater and the boiler-superheater as the principal variables which could be modified to match the design conditions.

The gas velocity was adjusted to give an over-all pumping power loss equal to 1% of the heat extracted from the gas. The steam velocity through the reheater was taken to be 100 ft/sec because preliminary estimates indicated that this would give a pressure drop within the tubes of approximately 15 psi, that is, about as high a pressure drop as would be acceptable. Discussions with Babcock & Wilcox engineers led to the choice of a water flow rate through the boiler which would give a steam velocity of 30 ft/sec at the inlet to the superheater in order to assure good flow stability at light loads. An analysis of the flow stability problem showed that the proposed design should be satisfactory.[17]

In selecting a set of proportions for the steam generator, the most important single consideration was reliability. For the maximum possible reliability it seemed desirable to avoid dissimilar metal welds, both in the tubes and headers and between the thermal sleeves and the inlet and outlet pipes. It also seemed desirable to avoid the possibility of chloride corrosion of stainless steel. Since these difficulties could be

avoided with 2.25% Cr–1.0% Mo steel, which has been used successfully in a wide variety of boilers at temperatures up to 1100°F, the designs for the steam generators of the HGCR-4 and -5 were based on this material. To accommodate the pressure stresses in the high-temperature zone, the tube outside diameter was increased 0.10 in. to give a wall thickness of 0.10 in. in the superheater; that is, double that in the economizer and boiler regions. Pressure stresses in the reheater tubes are negligible, since the reactor gas system and reheater steam pressure are almost the same.

Two major steps were taken to reduce the tube wall temperature in the superheater to ease the stress problem. The gas temperature leaving the reactor was reduced from the 1350°F used for the HGCR-3 to 1250°F for the HGCR-4 and the HGCR-5. The tube spacing in the superheater and reheater was opened up to reduce the gas-side heat transfer coefficient. The resulting designs (for which data are presented in Table 2) give an average tube wall internal surface temperature at the superheater outlet that is only about 20°F above the steam temperature. The heat transfer coefficient on the steam side is about 1000 Btu/hr·ft^2·°F, whereas that on the gas side is only about 100 Btu/hr·ft^2·°F. The temperature drop through a 0.10-in.-thick 2.25% Cr–1% Mo steel tube wall will be only about 15°F. This gives a mean tube wall temperature of about 1080°F where the gas enters the superheater. Since the allowable stress at 1100°F is 4200 psi, and since the pressure differential across the tube wall is 2000 psi, giving a stress of about 4000 psi, the 2.25% Cr–1% Mo steel should be satisfactory if irregularities in the steam and gas flow and temperature distributions are sufficiently small so that the peak metal temperature will be within about 20°F of the average value where the gas enters the superheater.

Hot Spot Problems

In examining the system for sources of hot spots arrising from flow or other irregularities, the first factor considered was the tube diameter. Commercial tolerances on the internal diameter for 0.40-in.-i.d. tubes of good quality will be approximately ±0.003 in., or about 1.2%

of the diameter. Since the flow will vary as the 2.4 power of the diameter for a given pressure drop, this will lead to irregularities in the flow distribution of approximately 3%. If the heat input to the tubes were uniform, this variation in steam flow would give variations in the superheater steam outlet temperature of about 46°F. However, variations in the steam flow will change the heat transfer coefficient on the water side, and an increase in the steam outlet temperature will lead to a reduction in the temperature difference between the steam and the gas of about 20% at the superheater outlet. Since the water-side heat transfer coefficient is from five to ten times that for the gas side, the former effect would reduce the irregularity by only about 5°F, but the latter effect should reduce it about 15°F. Thus the combined effects of irregularities in tube diameter should not cause the steam temperature leaving the low-flow tube to rise more than about 20°F above the average steam outlet temperature.

The variations in steam flow from one tube to another arising from differences in tube internal diameter and irregularities in flow in the outlet headers could be reduced by flow testing each assembly after completion of the outlet headers but prior to closing the inlet headers. Since the dynamic head in the steam leaving the superheater tube is about 1.8 psi, differences from one tube to another because of outlet header geometry will have a much greater effect on the flow distribution in the bundle than corresponding differences at the inlet header. The combined effects of the variations in tube internal diameter and outlet header geometry can be determined by water or air flow tests during assembly of a tube bundle, and orifices can be inserted at the inlet to the economizer portion of the tube prior to completion of the inlet header drum.

In addition to the items discussed above, the principal factors which would introduce differences in temperature of the steam leaving the superheater would be differences in the external surface area of various tubes from one tube to another and irregularities in the gas temperature distribution. The configuration chosen was selected carefully to keep the tube length uniform, within a few inches, so that the surface area should be very uniform from one tube to another. Small changes in surface area

with tube diameter will be more than compensated by changes in flow, and, in fact, will act to relieve the effects of diameter on the flow which were discussed above.

The gas temperature distribution across the reactor outlet may vary considerably if variations in the radial power distribution are around 30%. By careful design it should be possible to orifice the gas flow through the core sufficiently well to reduce the exit gas temperature variation to about 10% of the temperature rise through the core, or to about 60°F. Deflectors at the exit of the coolant channels could be used to promote mixing in the plenum above the core. This approach ought to make it possible to hold the gas temperature at the steam generator inlet to within 30°F of the mean. This would tend to increase the tube wall temperature for some tubes by as much as 7°F. The tube spacers can be designed as baffles to induce a small swirl component in the gas flow through the steam generator so that any given tube will see a wide variety of gas stream filaments. This should help greatly to reduce the effects on the steam outlet temperature of both the small irregularities in the gas temperature leaving the core and irregularities in tube spacing in the steam generator tube matrix.

While it is difficult to estimate the combined influences of all these effects, preliminary estimates indicate that variations in the superheater outlet tube wall temperature can be held to less than ±30°F for the design contemplated. If further study should show that excessive local tube wall temperatures are likely to be a problem, consideration should be given to reducing the reactor gas outlet temperature to 1200°F, or even to 1150°F. It will be essential to test an actual unit thoroughly to obtain sufficient statistical data to check such estimates, no matter how thorough the analysis.

Designs for Higher Temperatures

Designs for higher steam temperature conditions could be developed using stainless steel or a new Inco alloy (Inco-713-B), which is somewhat similar to Inconel X but with much better strength and welding

characteristics. This alloy not only has better high-temperature strength properties than stainless steel so that it would permit higher steam temperatures, but it also should not be susceptible to chloride corrosion. Since turbine bucket alloys which show promise of being suitable for operation at 1350°F have been developed for gas turbines, such temperatures may prove of interest and may be feasible with these new Inco-wrought alloy tubes. This would make possible over-all thermal efficiencies of nearly 50% in a nuclear steam plant. If the reactor gas outlet temperature were maintained at 1450°F, there should be no hot spots in the steam generator tube walls above 1400°F. At this temperature the 100 000-hr creep strength of the Inco alloy would be about 6000 psi, an adequate value for a high-pressure steam system, particularly if operated with a high-pressure gas-cooled reactor so that the reactor cooling gas system pressure would partially balance the steam pressure.

Fuel-Handling and Core-Servicing System

Provisions for fuel handling and core servicing present one of the most difficult sets of problems in the design of all-ceramic gas-cooled reactors. These problems are so difficult, in fact, that they constitute a major question of feasibility. Since this matter is so vital, a careful study was made of the requirements and problems by preparing four quite different preliminary designs of fuel-handling and servicing machines for the HGCR-4. These included sufficiently detailed studies of the vital components to permit an evaluation of their feasibility. This section summarizes the problems encountered, the design precepts evolved in the course of this work, and presents the fourth and most promising design that emerged from the study.

Design Requirements

The fuel-handling system design requirements are determined in large measure by the fuel cycle. Reactor control, power plant operating costs, and fuel burnup considerations make it desirable that the fuel-handling system be suited to removal and replacement of 2 to 3% of the fuel charge

at intervals of two to four weeks. While it would be desirable to carry out fuel charging and discharging operations with the reactor at power, the design studies indicated that, from the charge-machine standpoint, there is a strong incentive in high-power-density, all-ceramic, gas-cooled reactors to avoid carrying out charging operations at power, or even at the full system operating pressure. Central station operating practice indicates that shutdowns for fuel-charging operations would not be particularly objectionable if they could be kept to about 8 hr in duration and occur no more frequently than once in two weeks so that they could be scheduled for weekends. For a total shutdown time of only 8 hr, thermal stress considerations favor keeping the reactor at a temperature close to the normal operating gas inlet temperature to avoid thermal cycling the pressure envelope. Holding the reactor at its normal gas inlet temperature does not appear to impose a serious penalty on the charge machine because the organic lubricants which might be used at lower temperatures would still be inadmissible inside the reactor shield because of the intense decay gamma radiation. Vaporization of organic lubricants at high temperature also might result in tarry deposits which could lead to difficulties in other parts of the system, such as the control rods and drives.

If the system is to be idled down, the requirement that it be depressurized during the fuel-handling operations does not appear to be a serious one. Blower equipment to pump down or pressurize the system in about 1 hr seems essential with a contaminated gas system so that prompt action can be taken to minimize the spread of contamination within the containment vessel in the event of a leak from the main gas system. (The capital charges for such equipment seem quite reasonable, that is, about $0.40/kw.) Since the time ordinarily required for a routine startup or shutdown in going from zero to full power or vice versa is at least 1 hr, the pumping operations can proceed during this period and will cause little or no increase in the amount of downtime required for fuel handling. Depressurizing the system eliminates the extremely troublesome design and operational problems associated with the movement of fuel through high-pressure gas locks and provision for the pressure difference across the

charge-machine walls. In fact, in spite of persistent attempts, none of the preliminary layouts for high-pressure gas locks evolved in the course of the study appeared capable of giving the high degree of reliability desired.

Cooling the spent fuel during the discharging operations presents problems. Even with the reactor shut down there would be a high rate of temperature rise in the fuel if it were allowed to go without cooling. A preliminary estimate indicates that 2 hr after shutdown, the fuel temperature rise for the subject design would be about 0.5°F/sec if there were no cooling (as compared with about 30°F/sec at power). Energy will be emitted in the form of gamma and thermal radiation from the fuel to the walls of the charge machine, however, and at a fuel element temperature of 1500°F this will be adequate to remove the fission-product decay energy 1 hr after shutdown. Thus it will be possible to avoid using a high-velocity gas jet to cool the fuel during the discharge operation. This should help to minimize the spread of particulate activity. It might be argued that it would be well to cool the fuel element to a temperature well below 1500°F to reduce the diffusion rate of fission products through the matrix and coating, but there is little incentive to do this since there is no point in cooling it to a temperature lower than that for which the amount of activity released by diffusion will be less than the amount of particulate activity dispersed by the traces of abrasion which will inevitably occur as the fuel element is removed from the reactor.

The number of channels in the reactor, the number of fuel elements, and the fuel element total weight all affect the charging problem. The HGCR-5 design has 5040 fuel channels and approximately 50 400 fuel elements weighing about 20 000 lb (as compared with the GCR-2 design which has 1597 fuel channels with 9582 fuel elements weighing approximately 320 000 lb).

An important consideration in charging the reactor is the spacing of the fuel channels. In the Calder Hall and EGCR reactors the channel spacing is 8 in. on a square pitch, whereas in the proposed BeO and graphite reactors it is 2.0 and 2.25 in., respectively, on an equilateral triangular pitch. While in the Calder Hall type it is hardly practical

to consider charging a number of channels in a single operation, because the channels are spread so widely apart, in the proposed BeO design some 27 channels are enclosed within a 12.5-in.-diam circle. This introduces the possibility of gang-loading a group of perhaps 27 channels. The fuel charge tube penetrating the shield would have to be rather large — 24 to 30 in. i.d. — so that the ram of the fuel-handling machine could pass through it with a magazine containing enough fuel for gang-loading 27 channels. This would make possible a drastic reduction in the number of operations required for charging a core. A single large charge tube of this sort would suffice to service the entire reactor.

Another important consideration in the design of the charging equipment is the total travel of the charging mechanism in moving the fuel from the shield face into its proper position in the reactor. In the proposed design this distance is roughly half that of the corresponding value in the Calder Hall and EGCR reactors. This is a very important consideration because the deflection in a long overhung member varies as the cube of the length. Cutting the distance between the fuel charge tube flange and the face of the reactor by a factor of two should improve by a factor of 8 the precision with which the charge head can be positioned at the face of the core, assuming the same weight of fuel and the same size of loading mechanism. If the charge tube diameter can also be doubled, deflections can be further reduced by another factor of 8. This should help tremendously in locating and positioning the charging equipment in the core and in cutting the cost of the charge machine.

It is helpful to consider a typical loading procedure to clarify some of the problems which would arise. Fuel-charging operations would be started by removing the closure flange and shield plug assembly and storing it. The charge machine ram would then rise into position with an empty magazine for removing spent fuel. The problems of positioning this magazine relative to the reactor core depend on the complexity of the loading pattern. A suggested loading pattern for handling 27 channels at a time is shown in Fig. 27. If 2 or 3% of the fuel is to be changed in 6 or 8 hr, the fuel from about six groups of 27 channels each would have to be removed and replaced. Thus 1 to 2 hr would be available for

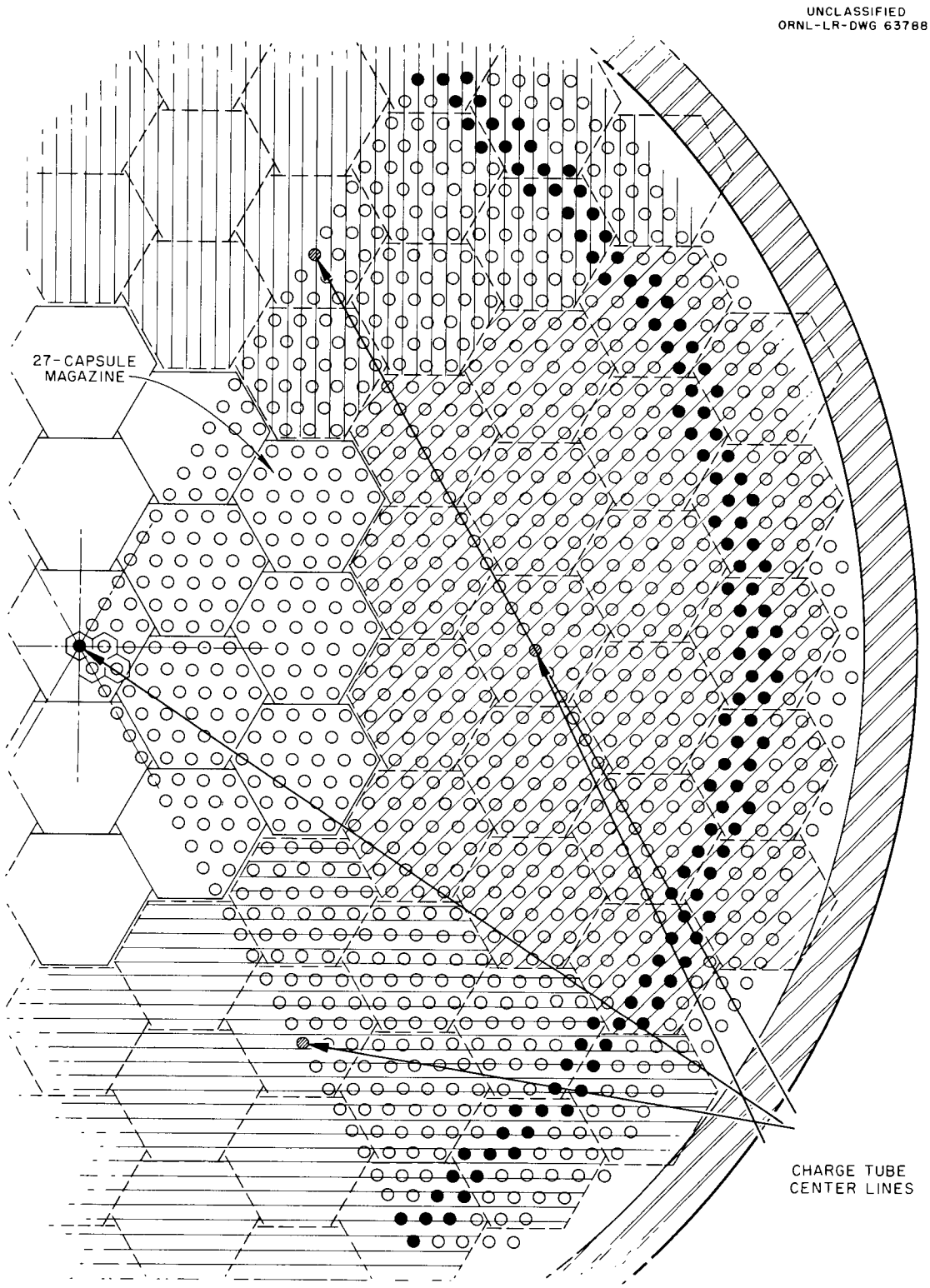

Fig. 27. Core Loading Pattern for Handling 27 Channels at One Time.

each cycle of the fuel-handling machine. As a point of interest, this may be compared with a 6-min operating cycle for the charge or discharge of one fuel element at Calder Hall. The Calder Hall cycle thus takes about one-tenth of the time available for the more complex operations required for the proposed design, but about 100 times as many cycles are required. The 6-min cycle at Calder Hall includes, of course, no allowance for contingencies and no allowance for checking spent fuel elements with visual equipment.

Provisions for visual inspection of the zone being charged or discharged during the course of the operations would be extremely valuable. An arc light with a parabolic reflector could be mounted on a retractable tube which could be inserted into the space above or below the core. A mirror mounted inboard of this light could be arranged so that both it and the light beam would be aimed in the same direction and could be rotated either with the tube or about an axis transverse to that of the tube, and the assembly might be moved axially to view any region of interest. A television camera mounted in the same tube but deep in the shield would be protected sufficiently that radiation damage to the lens would not be a problem. Two viewing devices of this sort at the top of the core and two at the bottom should help immensely in fuel-handling and servicing operations and should make it possible to eliminate the large amount of electrical sensing equipment, limit switches, and the like which would otherwise be required.

The successful operation of the reactor is very heavily dependent on the reliability and effectiveness of the fuel charge-discharge machine. Not only must the moving parts continue to function with a high degree of reliability, but they must continue to operate accurately so that the various positioning operations will not deteriorate with wear; otherwise, jamming in one form or another might occur during the installation or removal of fuel elements. This in turn means that the moving parts should function with little wear and a low coefficient of friction. Lubrication of the moving parts of the charge machine poses some exceptionally difficult problems since parts of the machine must operate at

a temperature of about 650°F under intense radiation. Aside from temperature effects, the radiation dose rate at the face of the reactor is such that, under operating conditions, the fast-neutron dose alone would cause severe damage to petroleum-base greases in about 6 min. At high temperatures the deterioration would occur even more rapidly. Some of the synthetic lubricants, such as the silicones, are better suited to operation at high temperature than petroleum-base lubricants, but they are substantially more sensitive to radiation, and hence would not be satisfactory. Petroleum-base lubricants ordinarily may not be used at temperatures above approximately 450°F, and even at that temperature their life is limited. If a circulating-oil system is used, substantially greater life can be obtained, but this would pose very serious limitations on the design of the mechanism. Under any circumstances the lubricant must have a very low vapor pressure to avoid the formation of tarry deposits which might lead to such difficulties as fuel elements sticking in channels.

Only a few lubricants appear to be suited to this application. The most promising are dry lubricants, such as molybdenum disulfide, graphite, and phthalocyanine. There has been a substantial amount of work on all three materials for aircraft power plant mechanisms designed to operate at temperatures up to 1200°F. This work indicates that reasonably low coefficients of friction and low wear rates can be obtained if the mechanisms are carefully designed for this sort of service and that molybdenum disulfide appears to be more promising for this application than either graphite or phthalocyanine. Relatively large clearances must be employed, and a means for renewing the dry lubricant films must be provided. Gas or liquid jets carrying a suspension of sulfide powder have been used with some success, but do not appear practical for the fuel charge machine application. Thin coats of varnish containing molybdenum disulfide powder have given good service, especially if baked on in several thin layers. A sintered compact containing approximately 10% molybdenum disulfide powder, 5% copper, and the balance silver appears promising.[18] Compacts of this character may be employed as blocks in the separator cages of ball or roller bearings, as bushings for simple journal bearings, or as

idlers in gear trains. In all cases, the unit loads should be kept low. It seems clear that the design of the fuel charge machinery should be predicated on the use of detailed components that are well adapted to the special lubrication conditions that will prevail, and much testing of basic components should precede the final design.

Design Precepts

The design requirements were reviewed together with preliminary sketches for several proposed approaches, and the following set of design precepts was formulated:

1. The fuel-handling system should make it possible to replace about 2% of the fuel while the plant output is reduced to about 1% power during an 8-hr period over a weekend.

2. The fuel-charging operation should begin 1 hr or more after shutdown with the reactor cooling gas system temperatures close to their normal full-power values. This will avoid thermal cycling of the pressure envelope and yet will give an energy generation rate in the fuel such that no special cooling provisions will be required in the fuel-handling operations.

3. The gas system pressure should be reduced to atmospheric to simplify the problems of gas locks and to reduce the hazards associated with gas leakage.

4. The charge machine should be designed to load or unload from one to three dozen channels in one operation through a single charge tube from 24 to 30 in. in diameter.

5. The fuel-handling system design must be such that no moving parts will remain in the reactor.

6. One or more hot cells should be provided immediately adjacent to the fuel-handling system to permit observation of fuel removed from the reactor and to facilitate maintenance of fuel-handling equipment.

7. A minimum number of moving parts should be required to operate at high temperature under severe gamma irradiation. These parts should be designed for generous running clearances, and the speeds and unit bearing loads should be low. Each mechanism should be designed so that

its performance will be insensitive to clearance variations resulting from thermal distortion or wear, and the rubbing surfaces should operate satisfactorily with a dry lubricant.

8. The system should be such that all moving parts required to operate at high temperature can be readily disgorged from the charge machine for servicing in the hot cell. Of the balance, all but a few bulky parts, such as a ram assembly, should be readily removable from the outside of the service machine.

9. The bulk of the charge machine mechanism should be designed to operate at a temperature below 200°F, and should be subject to a total radiation dose of less than 10^8 rep in 20 yr. Convection cooling of the outer shell by room air should suffice since the average energy to be dissipated will be less than 25 kw.

10. All components should be overdesigned so that they will operate at no more than 20% of their normal rated capacity.

11. Metal or ceramic parts should be employed for those components exposed to severe irradiation; no plastics or hydrocarbon lubricants should enter the reactor shield or spend appreciable periods close to spent fuel.

12. During charging operations both the upper and lower faces of the reactor should be provided with continuous closed-circuit television surveillance to minimize the number of sensing devices, limit switches, etc., required in the charge machine mechanisms. Arc lights and metallic mirrors in four periscopes retractable for cleaning could direct light to four shielded television cameras, two for the top of the core and two for the bottom.

13. The headroom requirements should be kept to a minimum to cut the cost of the reactor vessel, the containment vessel, the charge machine, the concrete shielding, and miscellaneous construction factors. The incremental cost of additional headroom may run as much as $20,000/ft.

14. The entire set of facilities for carrying out the discharging operation and fuel storage should be of a basic design well suited to very stringent leaktightness requirements. Flanged joints for the penetrations required should employ seal welds or buffered double O-ring

joints located in relatively cool shielded zones so that radiation damage to the elastomer would not present a problem.

15. During the charging operation a ventilating system should draw gas through a filter and deliver it as a buffer gas stream to a labyrinth seal at the top of the ram. With this arrangement gas will flow from the cool lubricated portion of the charge machine toward the reactor and toward the fuel discharging chute to minimize contamination of vital components.

16. For fuel transfer operations there should be no gas locks which would sustain an appreciable pressure differential, and the entire system should be enclosed in 1/4- to 1/2-in.-thick steel plate with a minimum of penetrations.

17. The fuel-handling system should be designed for compartmentalization to permit hydraulic isolation of any given region by diaphragms and gamma shielding so that local decontamination operations can be carried out to permit contact maintenance of that portion of the system. (Decontamination factors of 1000 have been obtained in small components by washing with Turco 4518, an inhibited oxalic acid.)

18. The basic fuel charge equipment should be adaptable to core servicing operations, such as replacement of the moderator.

Proposed System

The proposed configuration is shown in Figs. 19 and 23. Three large turntables are provided at 90-deg intervals about the center of the reactor. One of these turntables could be used for storage of fresh fuel, one for storage of spent fuel, while the third would be suitable for storage of spare shield plugs, servicing tools, and special equipment. The system design was based on the precept that the fuel cartridges would be mounted on trolleys which would be conveyed on tracks from a turntable to the shuttle zone immediately under the reactor. A ram mounted under the shuttle zone would serve to push the fuel cartridge assembly up into the reactor pressure vessel in the region under the core; a radial arm would position the cartridge assembly under the proper position in the core and insert the fuel elements into their proper positions in the

reactor. Fuel-removal operations would proceed in a similar fashion. A shield plug and closure flange mounted in the charge tube directly under the reactor would permit pressurization of the reactor pressure vessel and provide shielding isolation of the shuttle zone in the charge system.

The layout of Figs. 19 and 23 provides access for the maintenance of the ram and its drive system. Such work would include removal of individual drive units or the entire ram assembly. The design should permit limited contact maintenance of the ram drives without decontamination under most conditions. A forced flow of filtered gas from the ram housing through the labyrinth around the upper end of the ram in line with the shielding in that zone is designed to keep the amount of particulate activity in the ram housing to a low level.

The entire complex of shuttle zone, turntables, and ram housing is in an enclosure of light steel plate welded to form a leaktight envelope. Differential thermal expansion between the reactor charge tube flange and this envelope would be accommodated by a bellows joint. Cooling air would be circulated over the surfaces of the tanks containing the spent fuel to keep the temperatures below 150°F.

A hot cell is provided over each turntable to serve as a vestibule for inspecting, decontaminating, or sealing in shielding casks any equipment or spent fuel removed from the system. The turntable thrust bearings are located in these hot cells to facilitate inspection, servicing, or replacement. The latter operation would require jacking up the turntable using a flange just under the thrust bearing as a support point. Replacement of the lower main bearing (mounted on a trunion inside the base of the hollow spindle) would be carried out from the top with a special tool. The upper bearing would be heavily loaded, but it would be well lubricated, since it lies in a cool, well-shielded zone. The lower bearing would be subject to severe irradiation, but the loads on it should be purely radial and relatively low.

Shielding the shuttle zone from the spent fuel turntable would be accomplished with a tank mounted in one segment of the perimeter of the turntable. This tank could be rotated into position and filled with water. The outer side of the tank could be made somewhat flexible so

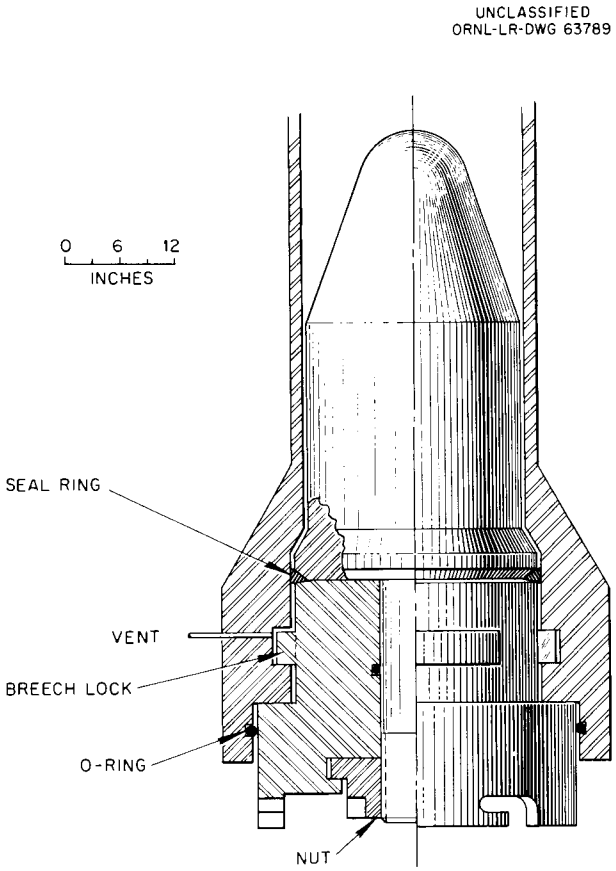

Fig. 28. Shield Plug and Vessel Closure Flange.

that filling it with water would cause it to distend outward to close the clearance that would otherwise exist between the tank and the flange around the end of the chute leading to the shuttle zone. This should minimize diffusion of contamination from the spent fuel turntable to the shuttle zone and drift of decontaminating fluid spray from the shuttle zone into the turntable housing.

The shield plug would be locked into the charge tube with a Bridgman-type nozzle closure fitted with a metal gasket, as indicated in Fig. 28. Since galling of the threads in the breech might be a problem, this portion would be made in the form of a removable insert which would in turn bayonet into position. It would be locked in place to resist rotation during insertion or removal of the shield plug, and would be removed only in the event of severe galling or damage to the rubbing surfaces. The design would be such that the bearing loads on the rubbing surfaces would not be large, and molybdenum disulfide would be used as a lubricant.

The basic machine for operations within the core was designed on the premise that as many as possible of the moving parts should be in low-radiation dose regions where they could be removed from outside the contaminated system envelope, while most of the remaining parts should be installed in such a way that the machine could readily disgorge them by semiremote procedures. This design philosophy resulted in the choice of a basic ram assembly on which could be mounted a variety of heads of

which the principal one would be that used for fuel charging and discharging operations. Each of these could be removed on a carriage to the equipment turntable. Cartridge assemblies for inserting and removing fuel would ride on similar but smaller gage trolleys which would travel on tracks to the turntables. Tracks for the fuel cartridge trolleys would be about 1 ft above the level of the tracks for the carriages carrying the various heads for the ram. The radiation dose levels to machine parts both in roentgens per hour and total roentgens for a 20-yr operating period have been estimated and are indicated in Fig. 29.

Ram

The basic element of the machine is the ram assembly shown in Fig. 30. This consists of an 18-in. square tube having a wall thickness of about 1/4 in. to give a light yet stiff structural element. The construction proposed should keep the bearing loads on the ram-drive operating mechanism to low values.

Quite a number of means for operating the ram were considered, including hydraulic and pneumatic pistons. In view of the radiation-damage problems, it was felt that no organic liquids or lubricants should be permitted to remain on surfaces which must enter the reactor shield. While a pneumatic drive might have been employed with only dry lubricants and a large radial clearance of perhaps 10 or 20 mils, the pumping power even with this small clearance would have been large, and the arrangement would inherently be one which would tend to disperse contamination. Cable drives and rack-and-pinion drives were also considered but appeared less suitable than the roller chain drive shown in Fig. 30. Four roller chains with counterweights drive the ram. This arrangement permits strong positive drive either up or down with a mechanism which has been demonstrated through many years of foundry operation to be simple and rugged, even if operated at high temperatures with large amounts of grit (both of which have been avoided in the proposed design). By using worm drives on the sprockets with individual electric motors, accurate vertical positioning can be accomplished. A jaw clutch on each worm drive could be disengaged

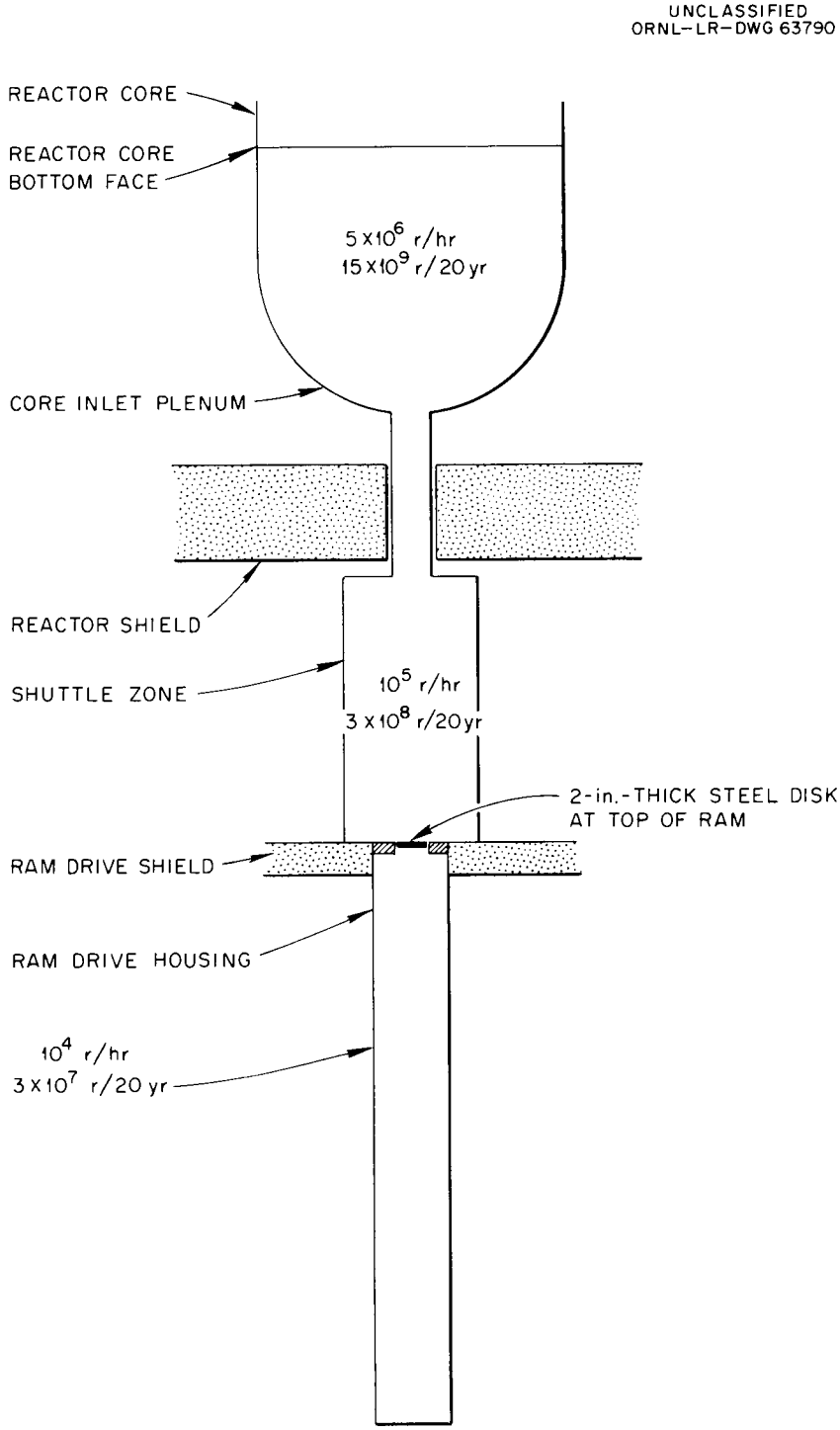

Fig. 29. Radiation Dose Levels in Regions in Which Fuel Handling Equipment Must Operate. Values are given for the dose both in r/hr at 1 hr after shutdown and in total dose to fuel-handling equipment for its estimated residence time over a 20-yr period.

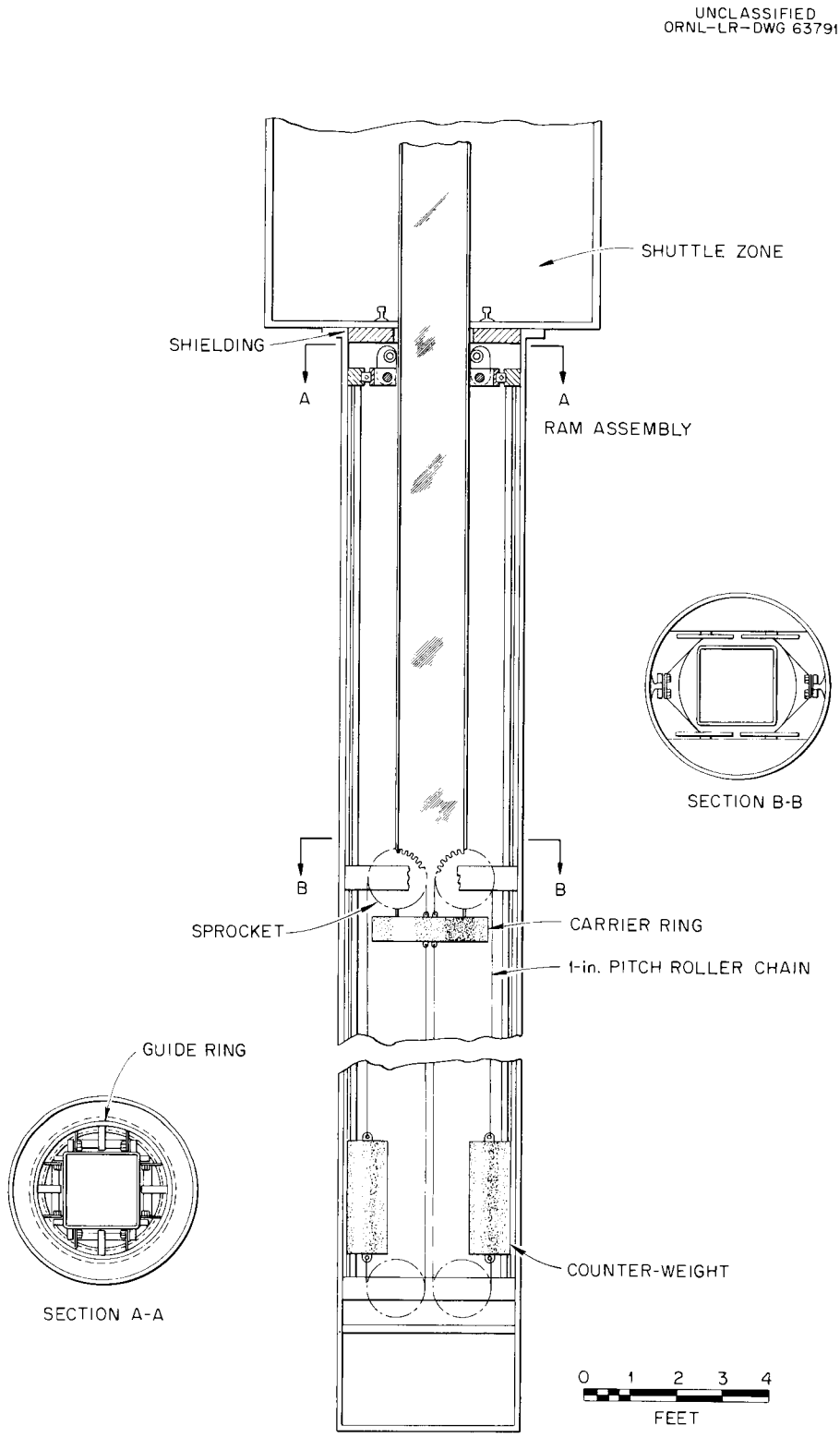

Fig. 30. Ram Assembly Showing Ram Chain and Sprocket Drive.

to permit operation of the ram by the other drive in the event of the failure of one of the drive motors.

The ram would be aligned by the rails guiding the carrier ring at the base of the ram and by rollers in a guide ring at the top of the ram drive housing, as indicated in Fig. 30. In the guide ring at the top, eight horizontal rollers in the inner ring center the ram and provide for axial motion. Similarly, four vertical rollers permit rotation of the ram and the inner ring assembly. The ram stroke would be approximately 35 ft, and, to give good alignment, the base of the ram would be at least 10 ft below the top guide ring when the ram reached the top of its stroke. The lateral loads on the guide ring rollers would be small during ram insertion or withdrawal, and would thus ease the wear problems. The clearance between the guide ring rollers and the ram would be kept to approximately 20 mils. This would give a total accumulated lateral play of approximately 50 mils at the reactor face because of these radial clearances. Differential thermal expansion from the fixed reactor mounting foot and the charge system would amount to approximately 1 in. at the ram center line in going from room temperature to the hot condition. This is one of several reasons for designing the system so that charge operations would be carried out by positioning cartridge assemblies under television surveillance rather than by blind positioning techniques requiring high precision and little backlash in the mechanism.

Rotation of the ram is accomplished with the mechanism indicated in Fig. 31. The vertical ram drive sprocket chains are attached to the carrier ring at the base of the ram. This ring rides against rails as shown in Fig. 31 to center the lower end of the ram and prevent rotation of the carrier ring. The ram tube would be rotated relative to the carrier ring by a pinion mounted in bearings attached to the carrier. This pinion engages a ring gear mounted at the base of the ram. The ram would be supported on a large ball bearing which would be designed primarily to provide for an upward thrust but which would also permit imposing a large downward load. The pinion would be driven by a square shaft sliding in a square hole in the center of the pinion trunion. The shaft would be

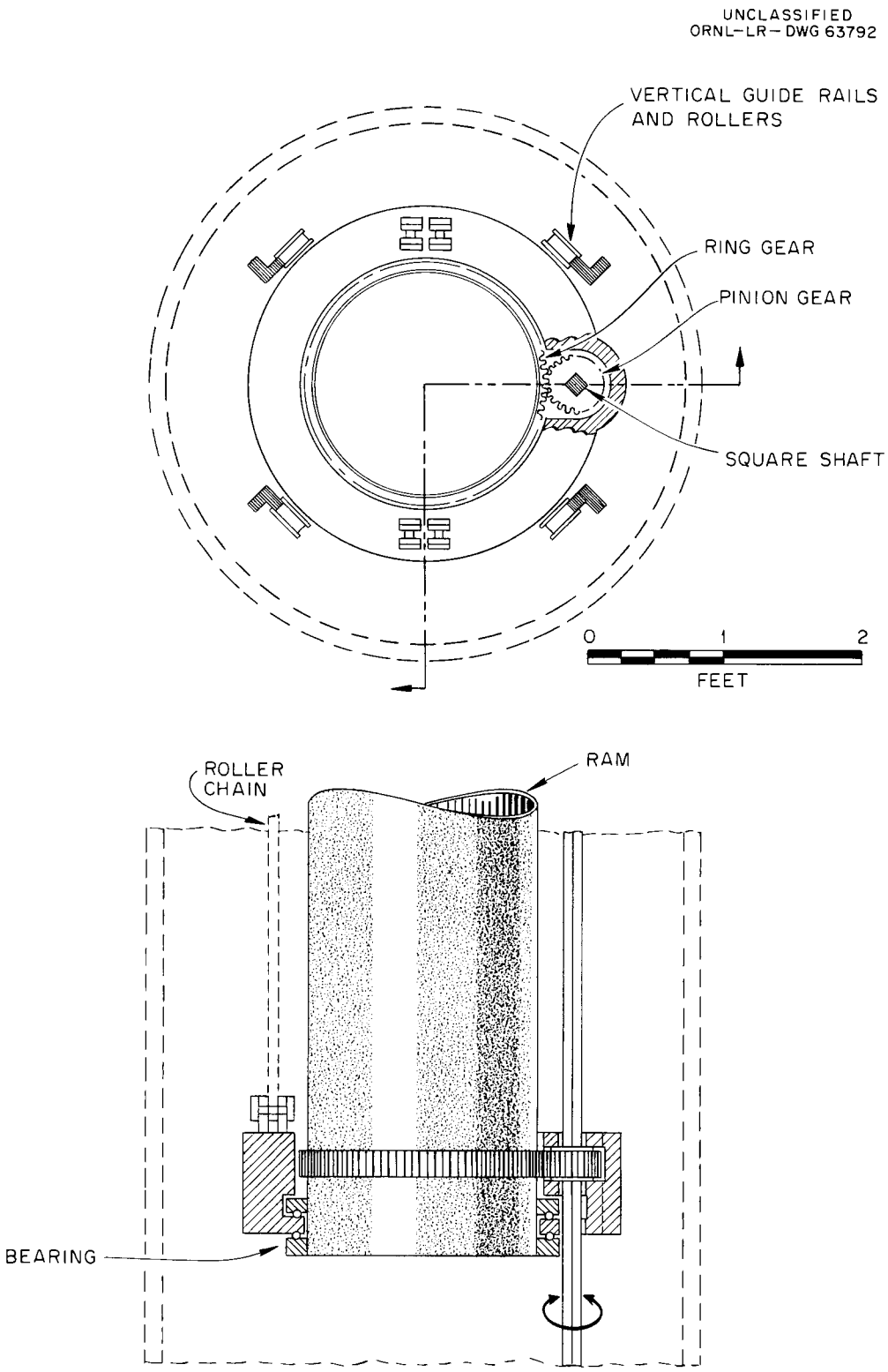

Fig. 31. Ram Rotation Mechanism.

driven from an electric motor flange-mounted under the base of the ram housing.

Drives for Operators

Motion would be transmitted through a set of three or four concentric shafts mounted at the center of the ram to make their operation independent of ram rotation. These shafts would consist of telescoping tubes with the outboard ends of each tube mounted in bearings. The lower set of tubes would have splines on their external surfaces throughout their lengths, while each of the upper tubes would have a short length of internal spline at its lower end to engage the splines of the lower shaft segments. The basic arrangement is shown in Fig. 32. The shafts are driven by electric motors through a gear box flange-mounted at the bottom of the ram housing. The pinions would be mounted on plain roller bearings with fairly large radial clearances, while the shafts would be mounted in ball bearings, since there would be essentially no radial loads on the splined shafts and no axial loads on the pinions.

Charge Head

The most complex element in the charge system is the head, shown in Fig. 33, which is employed for fuel-charging and discharging operations. It is basically a 13-ft-long tube with a 15-in.-wide U-shaped slot cut in one side to permit the lateral insertion of fuel cartridge assemblies. These assemblies would ride from the turntables on trolleys. Track segments mounted on the charge head would be aligned with the tracks from the turntables to receive them. A radial track extension would swing outward and downward from the side of the charge head after it had been raised into the reactor inlet plenum region. The simple worm and gear segment mechanism indicated in Fig. 33 should be satisfactory, since the loads on the worm during the raising and lowering operations would be quite small. The loads would be large when a trolley with a fuel cartridge assembly was pushed out on the extension rails, but the tracks would then rest on stops, and the gears would not be operated under such conditions. Shear pins in the gear sectors would be designed so that, in

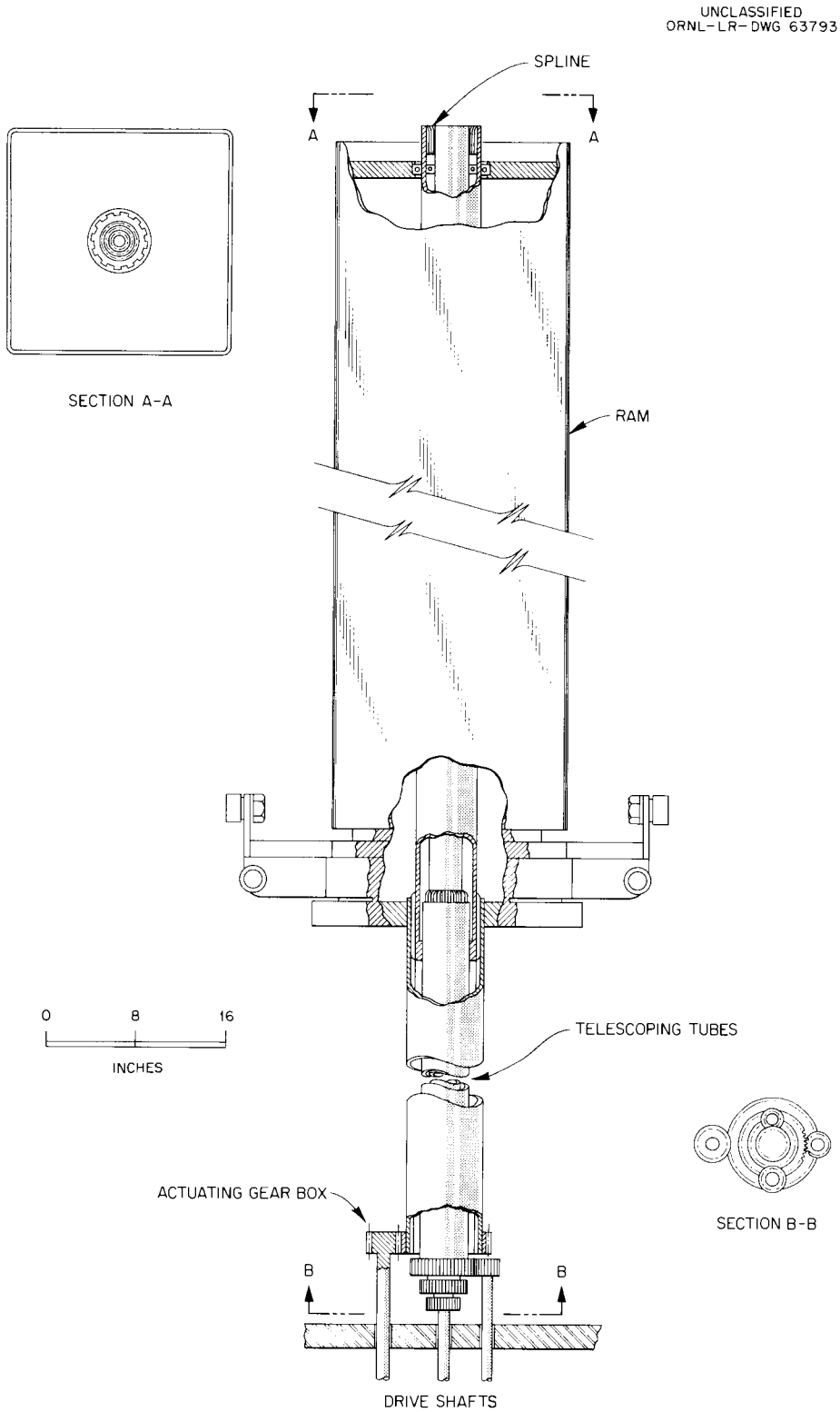

Fig. 32. Ram Assembly Showing Telescoping Tube Sliding Joint, Bearing, and Pinion Assembly.

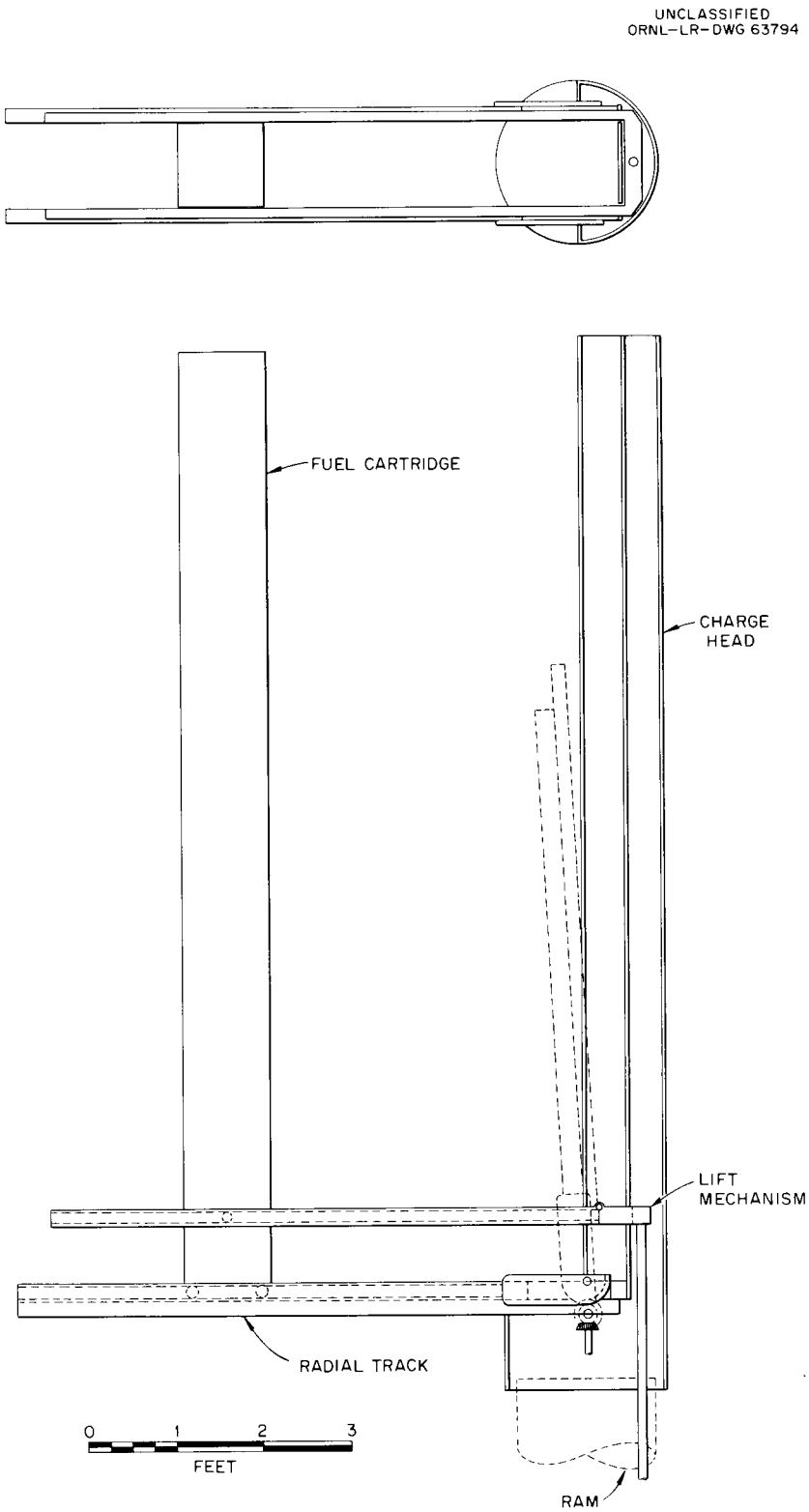

Fig. 33. Charge Head Showing Track Extension and Cartridge Lift Mechanism.

the event the radial track extension became stuck in the extended position, the ram could be withdrawn in an emergency simply by imposing a downward load sufficient to shear the pins.

Traverse of the fuel transfer dolly on the radial track extension would be accomplished by making use of the lead screws indicated in Fig. 34. A simple square-thread lead screw could be employed, since the loads on this element of the mechanism would be small.

The mechanisms described above would be actuated from a gear box mounted at the base of the charge head and driven by the telescoping shafts described above. Coupling the charge head to the concentric splined shafts at the top of the ram would require careful design. Spring-loaded splined quills mounted in the charge head would permit approximately 1 in. of axial motion of each quill relative to the charge head. When the charge head is rolled into position over the top of the ram, the ram can be raised to engage it. Tapered dowels would provide good alignment to drift the charge head into position on the ram. The ends of the splines would be rounded to help guide the splined shafts into engagement.

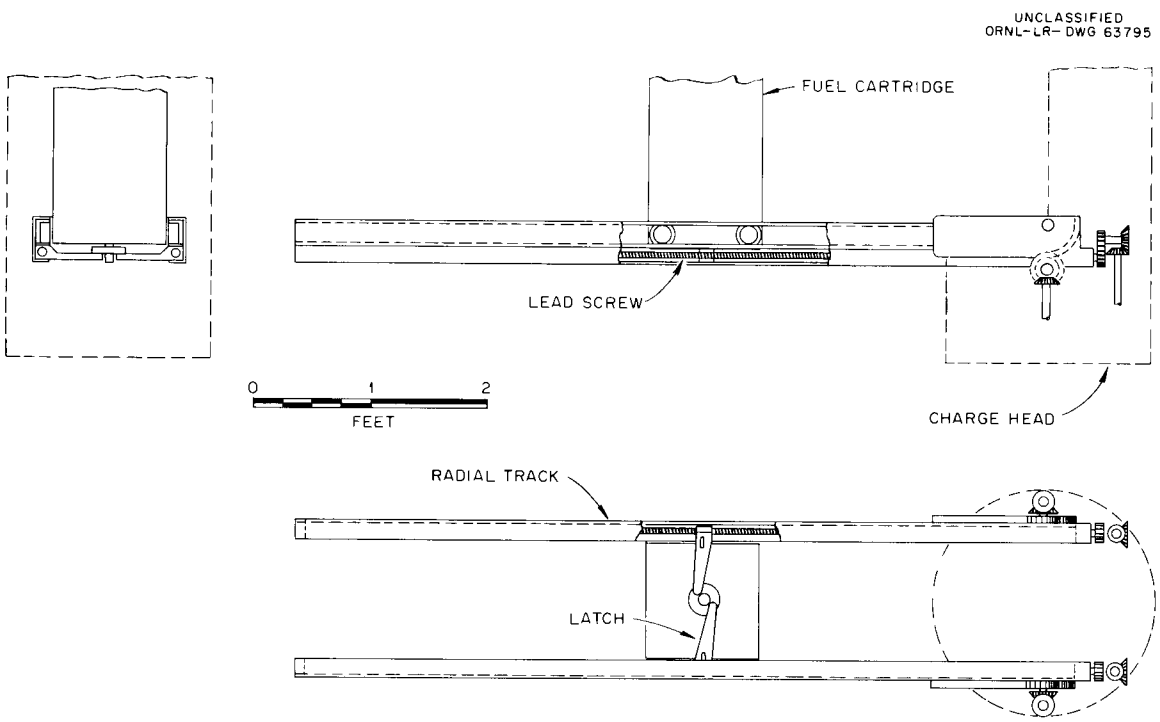

Fig. 34. Radial Carriage Traverse Mechanism.

The d-c motor drives for these telescoping splined shafts could be operated with a very low armature current so that the torque applied to each shaft during engagement of the splines would be small, and the shaft could be rotated slowly to engage the splines with a gentle torsional motion. The splined quills used for coupling the telescoping shafts to the gear box in the charge head would be observed with a television camera to make sure that they were well seated on the splines.

The fuel cartridge would be raised from the trolley into the core matrix by a pair of lift arms which would be extended with the same gear sector mechanism employed for the radial track extension. This pair of lift arms would pick up a stripper plate at the base of the fuel cartridge assembly to apply a force along the vertical axis. The lifting operation would be carried out with a vertical connecting rod linked to a hydraulic cylinder mounted in the lower part of the ram where the radiation dose rate would be low. The actuating pressure for this hydraulic cylinder would give a direct indication of the lift force (through a pressure gauge), and should make it possible to limit both the lifting speed and the force to any desired value. As indicated in Fig. 32, the top of the fuel cartridge lift mechanism is guided by a cross head fitted with rollers that ride between rails in the back of the charge head.

It would be possible to install the fuel cartridges on their trolleys with the proper angular orientation so that they could be moved into alignment with the core for charging operations without provision for rotation while being positioned at the core inlet face. Should this approach not prove practicable, an additional mechanism has been designed which would rotate the fuel cartridge relative to its trolley when centered over the ram. Although this would make it necessary to return the fuel cartridge and trolley to the central position for rotation, it should entail a simpler mechanism than would be required if the fuel cartridge had to be rotated after movement outward on the radial track extension.

The fuel cartridge assembly would consist of a base plate from which would protrude a set of 27 tubular spindles having an outside diameter of 9/16 in. and a length of 13 ft. The tubular ceramic fuel elements would be slipped over these spindles in a hot cell and the unit mounted on its

trolley. A stripper plate mounted at the base of the spindles also serves as the fuel element column support in the reactor. It would be equipped with a latching mechanism similar in function to that in the top of a ball-point fountain pen. This latching mechanism would be actuated by axial movement of the cartridge assembly into or out of position at the base of the core support plate. The latch would be designed so that it would engage either the core support plate or the base plate of the cartridge trolley so that the stripper plate would be locked into either one or the other of these two units. Axial withdrawal of the cartridge assembly spindles from the core support plate would shift the latching mechanism to a neutral position so that, upon reinsertion of the cartridge assembly for removal of the fuel, the latch would be operated to unlock the stripper plate from the core plate and lock it to the trolley base plate.

The charge head was designed to ride on a carriage which would travel on tracks from the equipment storage turntable to a position over the ram. The head would be 2 in. or so larger than the ram so that the latter could come up through the carriage and pick up the head. The carriage would remain in position around the ram until the ram is withdrawn from the charge head to permit its removal to the turntable.

It would be desirable, if not essential, to latch the charge head to the ram. For this purpose, and for contingencies, there should be a simple remotely operable manipulator mounted in the shuttle zone along with provisions for viewing operations in that region. A simple latching device could then be incorporated in the charge head. This manipulator might also be employed for such operations as rotation of the fuel cartridge assemblies to the proper angular position relative to the core before raising the ram. Such a manipulator is available commercially for about $10,000.

Head for Shield-Plug Removal

The shield plug would be removed after depressurizing the reactor to a little below atmospheric pressure. The shield plug removal head, while short, would have a base similar to that of the charge heads with

a similar gear box and provisions for coupling to the splines at the top of the telescoping shafts in the ram. The mechanism in the shield plug removal head would be used first to engage the shield plug flange and then to impose a torsional force on the flange to unlock it. Extra force could be supplied for the latter operation through an impact wrench device which could be driven through one of the telescoping shafts.

Servicing Heads

A wide variety of servicing heads could be installed on the top of the ram in much the same manner as the charge and shield plug removal heads. It would be well to make additional provisions in the ram for the special equipment of such heads. These provisions would include electric power supplied to receptacles at the top of the ram through copper cable fitted with ceramic insulation. Rubber-insulated tag lines from the base of the ram to the wall of the charge machine would be arranged to hang in loops with a large radius of curvature. Receptacles could also be provided at the top of the ram for several tubes which could be connected to compressed air, oxygen, or acetylene gas supplies, liquid lines for decontamination spraying operations, a vacuum cleaner, etc. Flexible metal or rubber hoses would connect the lower ends of these lines at the base of the ram with the wall of the ram housing.

The Jamming Problem with the Shield Plug Open

The most serious accident to the charge machine would probably be one involving jamming of the ram in the upward position. Since the shield plug would be removed, the radiation dose level in the vicinity of the shuttle zone of the charge system would be very high (about 10^5 r/hr) because of decay gamma radiation from the core. The first step would be to remove the jammed ram. This probably could be accomplished by shearing off the jammed parts, for example, by shearing pins in the linkage mechanism for the radial track extension and lifting arm. Such shearing operations could be checked out on a full-scale model of the machine in a test facility before acceptance of the mechanism for use in a reactor. In the event that the jamming involved some members which could

not be sheared in this way, one or two 1-ft-diam access tubes should be provided for emergency access to the region beneath the core to provide additional means for coping with unforeseen contingencies.

Once the ram is removed from the charge tube, a shield plug would be inserted if possible. If this could not be accomplished, a temporary flange might be installed at the base of the main charge tube, and steel shot could be blown in through an auxiliary access tube. A plastic might be pumped in during the early stages of such an operation to seal off the gas in the reactor from the shuttle zone of the charge system. With shielding installed in the charge tube, the shuttle zone of the charge system could be blocked off from the turntable regions by gamma shield plugs. The joints of these plugs could be sealed and the region decontaminated with chemical solvents. After decontamination a limited amount of direct-contact maintenance work should be possible so that the damaged parts could be removed and new components installed.

7. LAYOUT OF THE HGCR-5 REACTOR BUILDING

Over a dozen reactor building layouts were investigated in an effort to assure adequate space and shielding for maintaining the various equipment in the building while at the same time keeping the building size and the volume of concrete to reasonable values. Concrete structural design and hazards considerations were also given careful attention in the layout studies from which the design of Figs. 19 through 23 was evolved. The design chosen seemed to be the best of those considered from the standpoints of reactor operation, inspection, maintenance, construction costs, and hazards considerations.

In general, the most serious sources of reactivity outside of the reactor pressure vessel have been placed on the lowest level below ground, while sources of lesser intensity were placed at progressively higher levels. The installation was designed so that radioactive assemblies, such as spent fuel elements, carbon traps, elements of the fuel-handling system, filters, and the like, can be withdrawn vertically upward from heavily shielded rooms at the lowest level into casks in moderately shielded rooms above them. The casks would then be sealed and raised to the ground floor where they would be placed on cars and removed from the containment shell through the equipment lock. The large rotary overhead crane mounted at the top of the shield over the steam generator has been provided to carry out the heavy lifting operations.

Hot Cells

Much attention was given to the layout of the three hot cells for handling fresh and spent fuel and for servicing such components as elements of the machine for fuel-handling and core-servicing operations. Each of these hot cells is equipped with a General Mills type of manipulator mounted on an overhead crane spanning the greater portion of the hot cell. The hot cells have been made approximately 30 ft high so that long radioactive components can be readily loaded into or removed from casks. In addition to the General Mills manipulators, two mobile

manipulators, such as Hughes Mobots, are provided in the hot cell region and one in the core service area. Both these and the General Mills manipulators would be remotely operable from the main control room outside of the containment shell. The operator would follow the work visually with closed-circuit television cameras mounted on the Mobots and permanently installed cameras in the cells.

For special work, control rooms with large glass windows have been located immediately adjacent to the hot cells. Two master-slave manipulators for each hot cell would be installed in these control rooms for carrying out small specialized operations, such as inspections which could not be carried out well with the less sensitive fully remote viewing and handling equipment. Machine shop equipment would be installed in the equipment maintenance hot cell close to the window and on a level with the control room floor. Similarly, spent-fuel inspection equipment (metallographic, physical property, etc.) would be installed in the spent-fuel hot cell. This equipment would be located close to the control room windows. When possible, hot cell operations would be carried out from the control room outside the containment shell. Only especially important or delicate jobs would be handled from the hot cell control rooms immediately adjacent to the hot cells.

Anterooms to assist in servicing the hot cells and to provide for shuttling equipment from one hot cell to another have been provided immediately beneath each of the two hot cell control rooms. The stairs to these anterooms would be entered through hatches normally covered with concrete slab shielding.

An air lock with one valve close to floor level and one valve about 14 ft above the floor would be located in each hot cell for access to the turntables. A hoist mounted in the side of each air lock would be fitted with a clamshell type of grapple so that, with the top valve closed, it could be lowered through the lower valve to raise assemblies from the turntable into the gas lock. Once the equipment was in the lock, the lower valve could be closed, the gas lock atmosphere purged to the helium purification system, the top valve opened, and the assembly lifted out into the hot cell. This latter operation could be carried out using a

plastic bag technique to minimize contamination of the hot cell. The assembly could be lowered into a cask and the cask sealed for removal from the hot cell, or it could be inspected, subjected to decontamination operations, disassembled and sectioned, or other operations performed.

A large vacuum pump would be located in each of the hot cell anterooms for evacuation of the main helium system, that is, the pressure vessel for the reactor and steam generator and the tanks containing the turntables. This location was chosen partly to provide a fairly large-diameter short length of pipe between the reactor gas system and the vacuum pumps and partly to place these penetrations in the relatively unstressed portions of the helium system envelope.

These pumps would draw helium through filters and discharge to the helium purification system inlet through compressors; when removing air, these vacuum pumps would discharge through an additional set of filters to the stack.

The shape of the hot cells was in some measure conditioned on structural considerations. The two principal structural features of the shielding and the reactor building were the tall concrete cylindrical shield around the reactor-steam generator assembly and the cylindrical concrete shields around the turntables. The best way to provide the hot cells and at the same time to support the floors and the blower and header drum vaults appeared to be to use an annular wall of concrete arranged around the hot cell region in such a way that the span over the turntable pits would not be large. This arrangement has the advantage that it gives good structural support for the heavy equipment and shielding mounted or handled on the ground floor, with no need for load-bearing pillars in the hot cell window area.

The irregular shape of the hot cells resulting from concrete structural considerations gives some extra space which, while not especially valuable, may be useful for storage. Wheeled dollies could be kept in this space or moved about with the Mobots. Rather than use rails or rubber-tired vehicles, it seems desirable to use a 1-in.-thick steel plate for the floor in the entire hot cell area so that heavily loaded steel-wheeled vehicles can be used without damage to the floor.

Building Compartmentalization

As discussed in the section on hazards, all rooms enclosing either the reactor cooling gas system or the flanged joints provided for penetrations into that system would be lined with steel. This provides a good set of intermediate containment envelopes which, while not suitable for containing any substantial pressure, would be very effective in localizing the contamination from small gas leaks. It also facilitates the task of cleaning up a room if it becomes seriously contaminated. A preliminary study indicates that the cost of providing these steel linings will not be large. The tank lining the inside of the shield for the reactor-steam generator and those for the blower vaults could be fabricated and installed prior to casting the concrete. Thus they would serve as the internal forms for the concrete and should not cost much more than suitable forms. To avoid difficulty with stresses in the connections between the reactor shield liner and the liners for such rooms as the blower vault, joints such as that in Fig. 35 could be employed. The concrete around the reactor shield liner would be poured up to the level of the blower vault, the blower vault liner would be grouted into position, and the pour would be continued up over the blower vault liners.

Each blower vault could be isolated from the main air space within the reactor shield by a rubber boot arrangement, such as that indicated in Fig. 35. This would allow for differential thermal expansion between the hot reactor pressure envelope and the steel shield liner and yet should be very effective in preventing migration of activity from one region to the other and should simplify cleanup operations in the event of a leak.

Storage Tank Regions

The helium storage tanks are located in the annular region between the hot cells and the containment shell as shown in Fig. 22. A monorail over the tanks would facilitate their installation. All the piping and valves leading to these tanks would be located in shielded trenches in the thick floor of the mezzanine so that maintenance of the valves and

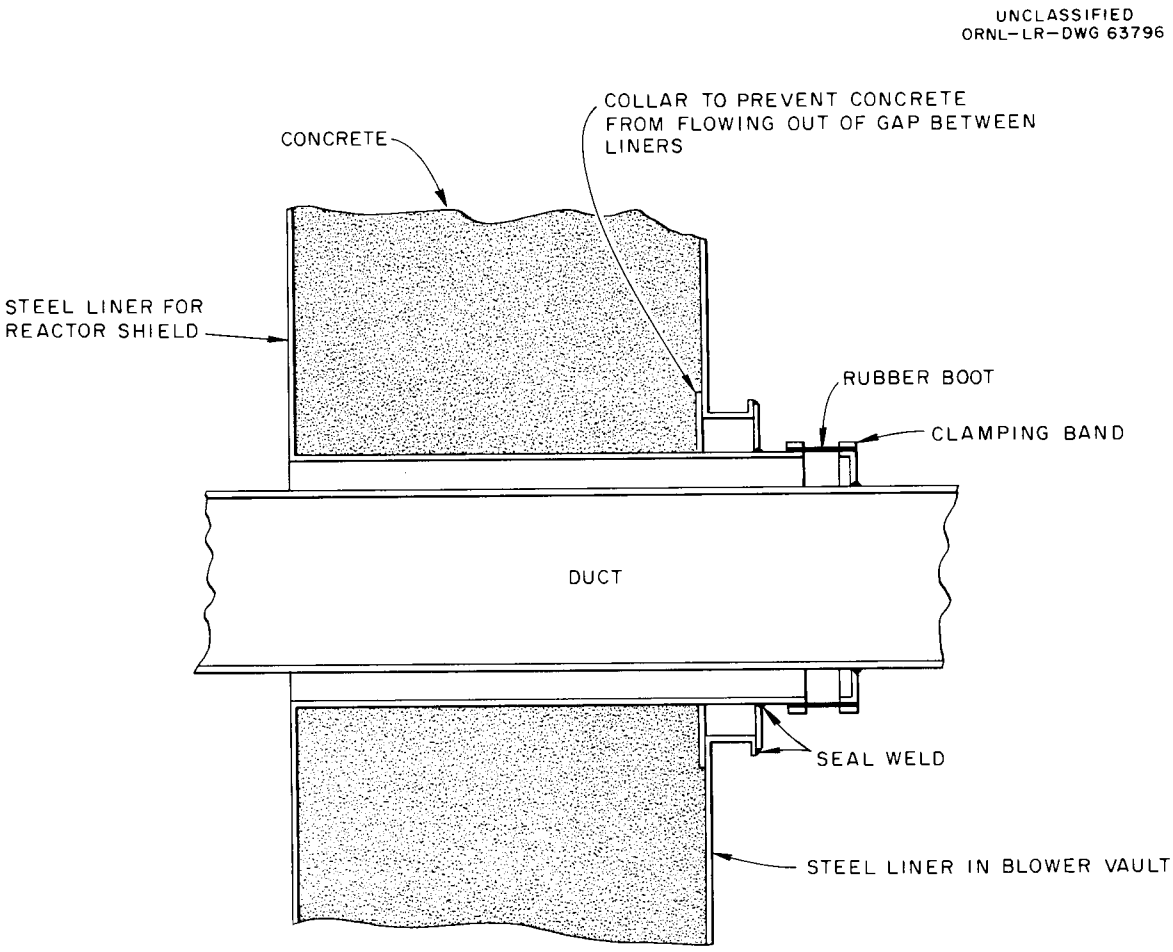

Fig. 35. Detail Section Through Shield Showing a Typical Joint Between Shield Liners and Between a Duct and a Shield Liner.

their operators could be carried out readily. The probability of tank leak is so low that it seems best to provide some extra tankage capacity so that any tank in which a leak developed could be blocked off. Thus no provisions for tankage replacement were contemplated in the design. The same basic philosophy was followed in preparing the layouts for the tankage for the decontaminating fluids and for the large charcoal traps of the helium purification system.

Mezzanine

The helium transfer pumps, the building ventilating blowers, the pumps for decontaminating fluids, and some of the equipment for the helium

purification system are located on the mezzanine as shown in Fig. 21. While these components might become mildly contaminated, the contamination level should not be large, since the fluids passing through them should first pass through filters which would be shielded. Thus this equipment should be accessible for direct maintenance on a limited-access basis. A Mobot could be provided on this floor for use in emergencies.

Most of the duct work for the ventilating system is located along the upper portion of the inner wall of the mezzanine area. A duct having a 2-ft^2 cross section has been provided so that any one or a few rooms may be individually purged to the stack. The system was not intended to provide rapid purging of the entire building, since no important occasion to do this could be foreseen, and such a large purge capacity is inconsistent with limitations imposed by hazards considerations. The requirements for the ventilating system are discussed in the section on hazards.

Equipment for dehumidifying the building air would be located on the mezzanine so that it could be connected into the duct system and used for dehumidifying and recirculating air to the different rooms to avoid difficulties with condensation. Since the entire building is enclosed in steel, there should be no difficulty with moisture seepage into the underground portions.

Ground Floor

No equipment has been scheduled for installation on the ground floor, so this space would be left uncluttered to provide plenty of room for major maintenance and handling operations (see Fig. 20). To this end, the blower lube oil systems, for example, have been located on top of the blower vaults. If the space there is not adequate, some of the equipment, such as the oil storage tanks, can be located on top of the adjacent steam-generator header-drum galleries.

Installation and removal of the control rods and control rod drives would be carried out with a manipulator located within the tank that houses the area over the top of the shield. The control rods or control rod drive assemblies could be withdrawn into vertical shield casks mounted

on wheels. Bagging techniques would permit withdrawal of the units without appreciable contamination of the atmosphere in the enclosure. Once a unit has been withdrawn and replaced or the access tube closed, the door of the enclosure could be opened and the sealed cask rolled out under the upper hoist on the crane. This could then be used to move it radially outward and lower it to the main floor of the containment shell or into the equipment hot cell where decontamination or maintenance operations could be conducted.

Helium Transfer, Storage, and Purification Systems

As in the HGCR-3, the HGCR-5 gas transfer and storage system was designed for a fast pumpdown with low pressure ratio compressors and pressure-staged storage tanks. The helium transfer pump capacity required to depressurize the system in 30 min is 1500 cfm which will require ~500 horsepower of pumping capacity.

The helium transfer compressors contemplated would use a construction somewhat similar to that of the blowers for the main helium system in that they would employ an oil-lubricated journal bearing to serve as the primary seal with a helium-buffered labyrinth seal to minimize contamination of the lube oil, but no external circulation of the helium should be required. The squirrel-cage drive motors would be fully enclosed with a pressure-tight casing. The compressors would each employ 20 centrifugal stages to give a pressure ratio of 2:1. Water-cooling jackets over the gas passages between stages would serve as intercoolers to reduce the work input required from the motor.

A Corblin diaphragm compressor similar to those being used in the EGCR has also been provided to permit pressurizing or evacuating a single tank with a high pressure ratio machine and thus obtain greater flexibility in management of the storage tank system.

The capacity of the helium transfer, storage, and purification system is dependent on the volume of the high-pressure contaminated-gas system. The 1500-cfm flow rate to the transfer compressors corresponds to ~0.1% of the system volume per second. While the bypass flow rate

through the purification system is commonly given as a percentage of the flow rate through the main system, the effectiveness of the purification system is dependent on the volume rather than the flow rate of the main gas system. From analytical work it appears that the bypass flow rate through the purification system should be about 0.1% of the system volume per second, although a somewhat higher flow rate may prove to be beneficial in reducing the activity level in the system.

Both the helium transfer and the bypass purification systems of the HGCR-5 were designed to handle 0.1% of the system volume per second. Thus the purification system could be similar to, but half the capacity of, the system designed for the pebble-bed reactor plant.[19] The helium velocity in the piping was taken as 150 ft/sec. This requires a flow passage area of 0.13 ft^2, or a 4-in. pipe.

The helium purification and transfer system layout is indicated in Fig. 36. A 5-in. pipe taps off the bottom of the casing of the blower

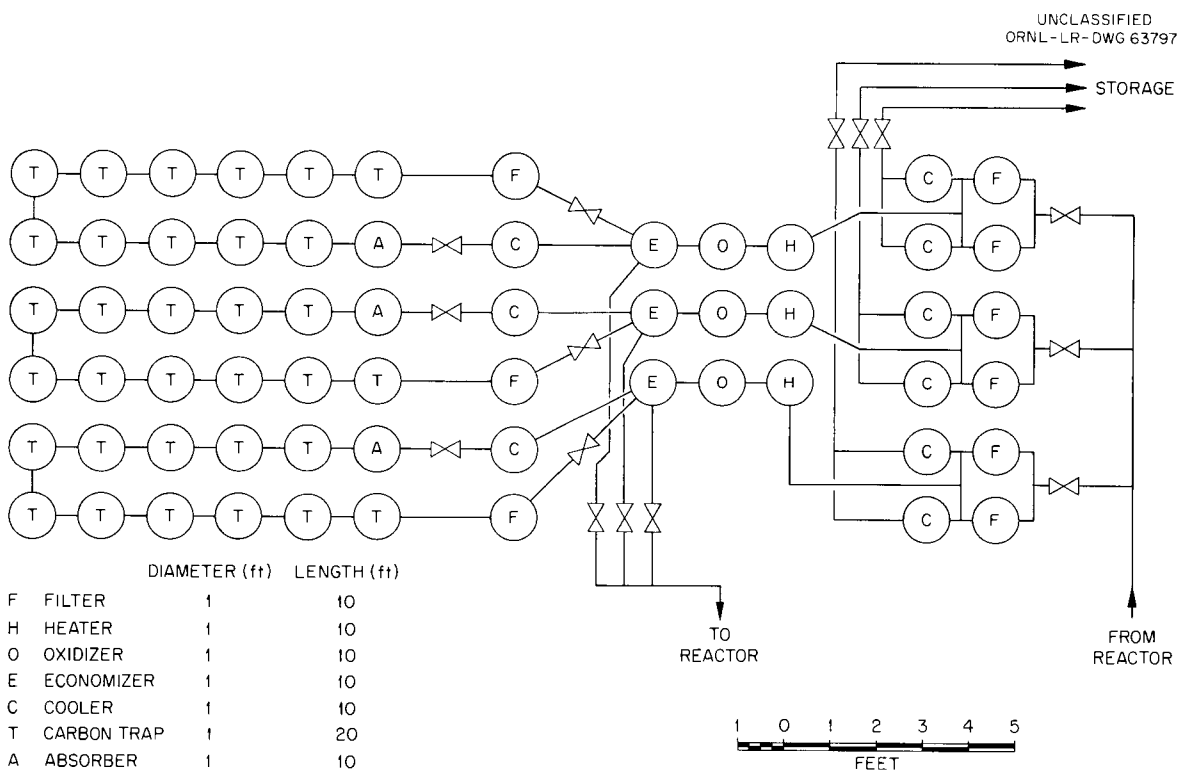

Fig. 36. Helium Purification and Transfer System.

that is located above and to the right of the area shown in Fig. 21 for the helium cleanup system. A manifold in a trench in the mezzanine floor would distribute this helium to six filters arranged in pairs with each pair discharging either to the purification system or through coolers to the helium transport compressors which discharge through another set of coolers to the helium storage tanks. Helium from the purification system would return through filters to the blower inlet.

A portion of the clean helium return stream would be supplied to the buffer-gas system for the blower seals. The bypass flow through the blower-seal buffer-gas system (about 50 cfm) would be returned through the filters to the helium purification system. The oil entrained in the helium buffer stream leaving the blower seal should be easily removed by a demister. Tests with demisters of both the centrifugal separator and maze types show that they remove substantially all droplets having a diameter greater than 3 μ, although the bulk of the smaller droplets will pass through either type. Research on diesel fuel injection nozzles gives some insight into the problems. While 1500-psi jets of No. 1 fuel oil will break up to give 90% of the material in the droplet diameter range between 10 and 40 μ, similar jets of lube oil do not break up into fine droplets.[20,21] This stems from the fact that high velocity liquid streams break up because friction between the liquid and the gas induces waves in the liquid surface, and an increase in viscosity tends to inhibit these waves. Since the peripheral speed of the oil slinger at the helium-oil interface would be about 100 ft/sec, whereas the velocity of an oil stream injected at 1500 psi is about 500 ft/sec, the lube oil stream thrown off by the slinger should form essentially no droplets smaller in diameter than 3 μ. Thus a packed demister should be adequate to remove the suspended oil. The vapor pressure of a good lube oil at room temperature is 0.1 μ.

The equipment required for the helium purification system is listed in Fig. 35. All these items have been designed to be cylindrical, with a diameter of 1 ft, so that they can be mounted vertically through holes in the floor of the mezzanine and connected with piping and valves placed in trenches in the mezzanine floor.

The installation envisioned would make use of three large cast iron grids with 12-in.-diam holes on 18-in. centers to serve as receptacles for the various tanks. Cast iron shield covers would be provided over the piping and valves to reduce the radiation dose level in the room over the grid. The helium pipes between units would have a diameter of about 2 1/2 in. A section through a typical unit with its connecting piping is shown in Fig. 37. Soft-seated valves would be located in the cool

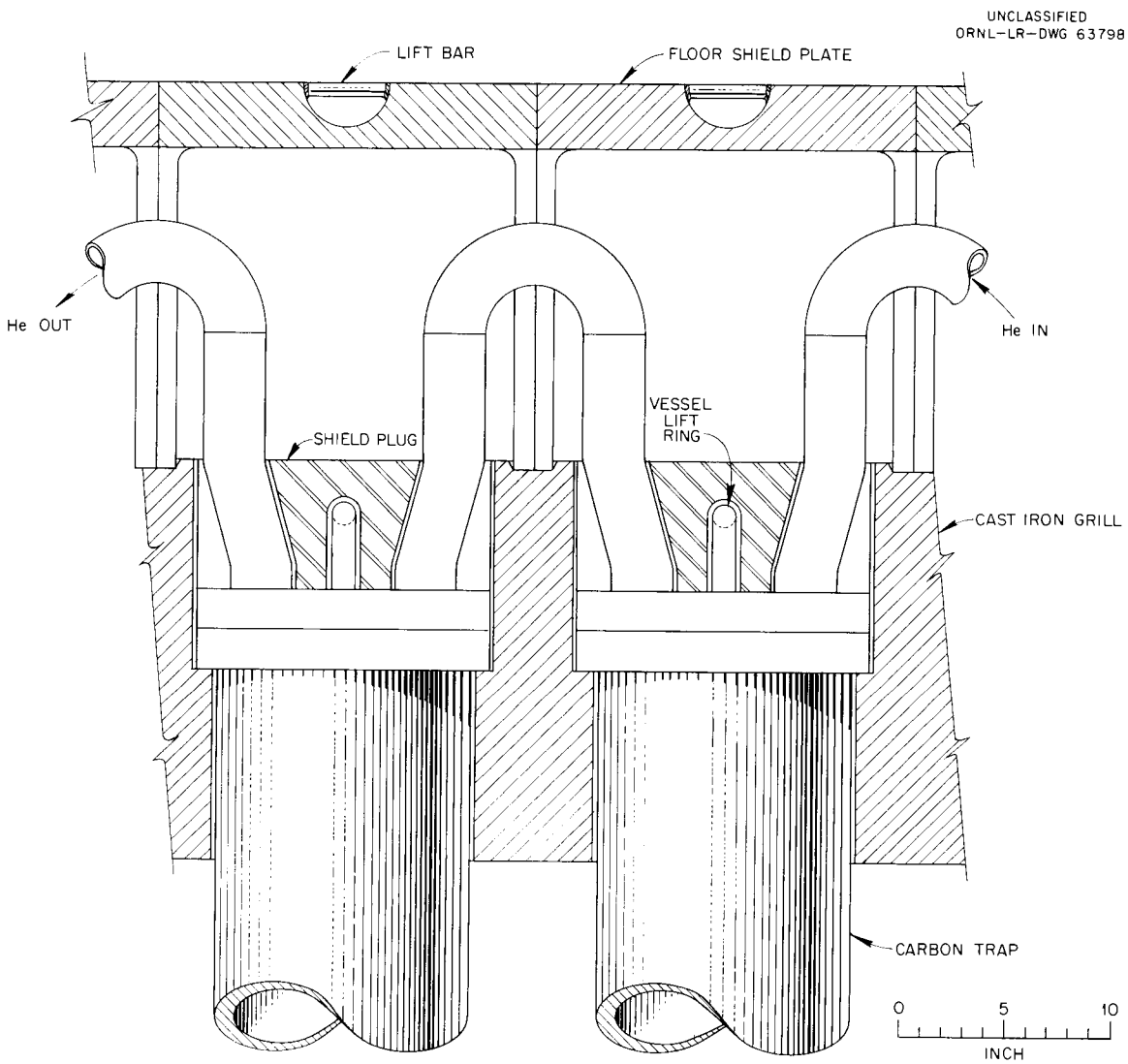

Fig. 37. Arrangement of Helium Purification and Transfer Vessel Connections to Shielding.

regions and, wherever possible, would be used in preference to the hard-seated valves required in the 650°F temperature zones. In general, the system would be arranged so that there would be three or four circuits in parallel. Thus, if any one circuit should become inoperative, the only effect would be to reduce the effectiveness of the bypass purification system somewhat. Note that the nine hot units, that is, the heaters, oxidizers, and regenerators, are clustered together so that a single large matrix of thermal insulation can be employed, and heat losses will be minimized.

This arrangement should permit direct contact maintenance work for disconnecting any component requiring replacement. The branch of the system involved would be valved off, the activity allowed to decay for a few weeks or months, and the branch purged to remove gaseous activity. The piping would then be cut using a plastic-bag technique to minimize activity leakage from the pipe ends, a hoist connected to the unit, a lead shield moved into position, and the unit withdrawn into the shield for removal from the building. The new unit could then be installed and coupled into the system. It should be possible to carry out all this work using direct-contact maintenance techniques.

8. HAZARDS PROBLEMS

The hazards problems of all-ceramic gas-cooled reactors may be classified in one of two groups: major accidents which for some reactor designs are potentially hazardous to the general public and minor incidents which may be costly but are hazardous only to the operating crew. The major accidents are relatively improbable, but minor incidents must be anticipated fairly frequently.

Major Accidents

The major accidents envisioned for the HGCR-5 are summarized in Table 7 together with a rough estimate of the probability for the occurrence of each and the probable consequences. The plant has been designed so that the system can be repaired and returned to operation in the event that any of the first four accidents occur. The next three incidents are at once so serious and so improbable that the plant has been designed simply to protect the general public; it might have to be abandoned if the accident occurred.

Before considering the accidents of Table 7 in detail, several important features of the system should be reviewed. Great care was taken in the design of the HGCR-5 to provide a primary reactor cooling-gas system pressure envelope having the maximum integrity possible. This primary pressure envelope would stay at a quite uniform temperature with the blowers in operation, since the entire inner surface is scrubbed by gas at the blower inlet temperature. There are no hot ducts, no expansion joints, and no areas in the pressure envelope that would be subject to intense heating in the event of either a reactor gas outlet temperature excursion or a blower failure. In the event that all three blowers fail, the heat input to the vessel by conduction and gamma heating from the interior would be less than that lost to the surrounding air through the thermal insulation for a vessel temperature of 650°F.

The proposed layout provides cooling of the shield by natural thermal convection of the air in the annular space between the reactor and

Table 7. Summary of Major Accidents Envisioned for the HGCR-5

Accident	Probability of Occurrence	Consequences
1. Blower stoppage, gas pressure maintained	1	Acceptable
2. Steam leak to gas system, no air inleakage	1	Water-gas reaction in core might damage graphite so that it would require replacement; steam reaction with ThC and UC might cause severe contamination; it should be possible to clean up the system sufficiently to continue operation, except possibly in extreme cases
3. Loss of gas pressure, blowers remain operable, no air inleakage	1	Probably acceptable if system design pressure is 500 psia or less
4. Loss of gas pressure, blowers remain operable, small air inleakage	1	Same as item 1 except that if the reactor is not cooled quickly, contamination may be dispersed through reactor system, and a difficult cleanup job will result
5. Loss of gas pressure, blowers remain operable, large air inleakage (system rupture)	0.001	May not be serious for SiC-coated fuel and moderator or if cooling exceeds oxidation heating; if rapid oxidation occurs, very serious dispersal of contamination through reactor system and building would be likely
6. Loss of gas pressure, blowers stop, no air inleakage	0.001	Severe core overheating and dispersal of contamination through the reactor system would give a very difficult, if not impossible, cleanup problem; the core would require replacement
7. Loss of gas pressure, blowers stop, substantial air inleakage	0.001	Oxidation of fuel and moderator, severe contamination; cleanup probably not practicable
8. Shield plug blowout	0.001	Containment shell integrity unaffected; serious dispersal and contamination of containment shell interior would result

the shield. This air circulation is adequate, not only to cool the shield, but also through heat losses through the thermal insulation it will maintain the reactor pressure vessel at a temperature not to exceed 650°F if the reactor is shut down, even if the gas leaving the reactor were to reach a temperature of 1500°F. If there were a loss of system pressure and all three blowers failed, the equilibrium temperature of the vessel might rise to 850°F; but there would be no pressure stresses in the vessel.

The air in the annulus between the pressure envelope and the shield is cooled by four heat exchangers located in the top of ducts which extend vertically from near the bottom of the shield annulus to a level near the top. Two of the four coolers are adequate to remove the heat transmitted to the pressure vessel cooling air, so each pair of coolers should be connected to an independent water system to give the shield air cooling system a high degree of reliability.

If all three blowers were to fail (accident No. 1 of Table 7), thermal convection cooling of the reactor via the steam generator would be adequate to remove the afterheat, even if the system pressure were to drop to 300 psi. If all the blowers were to fail, and if the instrumentation failed to scram the reactor by dropping the control rods, the gas temperature leaving the reactor would rise to the point where the cables supporting the rods would lose strength sufficiently so that the rods would drop. This would probably occur at a gas temperature leaving the reactor of 2000 to 2200°F. The gas outlet temperature overshoot would probably cause no serious difficulty, since the gas velocity over the steam generator tubes would be low when the blowers failed, and hence the steam generator tubes would be running at essentially steam temperature rather than at the reactor gas outlet temperature. The rods themselves might be permanently damaged by the temperature overshoot, but would probably not have suffered serious dimensional changes, since the stresses in the supporting cables would be very much higher than in the rod capsules. Since the gas velocity through the steam generator would drop, it would be over-cooled, and the gas temperature entering the core

would drop and thus keep the pressure vessel and core support structure below the design temperature.

A major cause for concern in gas-cooled reactor systems is the rupture of a steam generator tube and the consequent injection of large amounts of feedwater into the gas system, where it would vaporize. If one of the feedwater pipes entering the HGCR-5 steam generator were to rupture so that water poured into the gas system (accident No. 2 of Table 7), rough estimates indicate that about 300 lb/min of water would be injected into the gas system. This would vaporize to give about 450 cfm of steam, which would cause the helium system pressure to rise at the rate of about 2%/min. If this happens, the pressure relief valves will open within perhaps 5 min to relieve the pressure. Relief valves would be provided to discharge to the helium storage tanks for flow rates up to 1500 cfm, which should suffice for three broken feedwater pipes. If this were not adequate, additional valves set for a somewhat higher blow-off pressure would discharge into the containment vessel for larger flow rates. The latter condition would lead to the dispersal of contamination within the containment shell, which would make it uninhabitable but should not create a hazard to the public. To reduce the dispersal of contamination, these blowoff valves should be mounted to discharge through filters. The volume requirements for CWS filters of adequate capacity would be approximately 10 ft^3. A cooler mounted ahead of these filters should ensure that the bulk of the activity escaping will be xenon and krypton, which should reduce the problem of cleaning up the vessel after such an incident.

Valving off large quantities of contaminated gas could be avoided if the leak could be detected and the leaking segment of the steam system could be cut off promptly. The problem is largely one of providing instrumentation which would sense in which of the three segments of the gas system the tube failure had taken place. The steam generator would be compartmentalized so that one section would be coupled to each of the three blowers, and three independent feedwater systems would be employed. Once the feedwater supply to the leaking section was cut off, the amount of steam back-leakage that could occur would be very much less because of the larger specific volume of the steam.

Reaction of steam with uranium carbide in the fuel elements could result in the release of large amounts of fission products if the steam could percolate through the protective graphite coating to the uranium carbide at a substantial rate. A break in a water supply pipe to a tube bundle in the steam generator, which would release about 300 lb/min of water to the helium atmosphere, would lead to the oxidation of roughly 2100 lb/min of uranium and thorium carbide. Since there would be about 30 000 lb of uranium and thorium carbide in the core, if all the water vapor reacted only with the carbide (i.e., none reacted with the graphite), about 2% of the fission products would be released each minute that water poured through a completely broken pipe. A leak of this nature probably should be detected and the water supply to that region of the steam generator cut off within 1 or 2 min, in which case not more than about 5% of the uranium and thorium carbide in the core could react and lead to dispersal of fission products. While this would yield activity levels over 100 times those normally prevailing in the system, it should be possible to carry out decontamination and servicing operations to return the reactor to normal operation.

The water or steam would react with the graphite, but the reaction would be endothermic, so it should not lead to any high-temperature excursion. Water vapor in the core would increase the reactivity, and hence the reactor should be shut down. The control rods would be adequate to shut the reactor down even with a water vapor content equal to that for saturation at the steam generator outlet. The core could not be flooded with water since the inlet plenum below the core has a volume greater than the total water capacity of the feedwater system.

If the gas system pressure were to drop to atmospheric with no air inleakage (accident No. 3 of Table 7), any two blowers would be adequate to prevent a substantial temperature excursion of the core. If all three blowers were to stop with the system depressurized (accident No. 6 of Table 7), excessive core temperatures would result and would probably lead to vaporization of much of both the fission-product activity and the uranium carbide in the fuel elements. There should be sufficient thermal convection to keep the core support structure cool so that the vaporized

material from the core would deposit in the steam generator; hence the helium system pressure envelope integrity should not be adversely affected. The steam turbine drive system provided for the blowers makes it extremely unlikely that all three blowers would fail simultaneously, especially in view of the close coupling between the steam generator and the blower drive turbines.

Sets of pressure-operated louvers would be mounted in both the inlet duct and the entrance to the duct leaving each blower casing to serve as check valves to prevent backflow through the blower in the event that it stopped while one or both of the other blowers continued to function. (The louvers could be maintained or replaced by first removing the blower rotor assembly.) The total blower power requirements for the depressurized system would be drastically reduced (to about 1200 hp) because of the much lower density of the gas.

If the system became partially filled with air and the blowers remained operable (accident No. 4 of Table 7), the total blower power requirements would be increased to as much as 6000 hp (or about 15% of the full-power requirement), but the afterheat would still be sufficient to generate the steam required. By reducing the pressure in the steam system, the temperature in the steam generator would drop, and gas would be cooled to substantially lower than the normal operating temperatures so that, even with air in the system, the graphite would not burn if the temperature of the circulated gas could be reduced before substantial amounts of air entered the reactor cooling gas system.

The most serious accident envisioned for the EGCR has been a major rupture in the pressure envelope which would lead to entry of air into the system and subsequent oxidation of the graphite. Accidents No. 4, 5, and 7 of Table 7 represent variations of this condition. The volume of air in the containment vessel for both the EGCR and the HGCR-5 is approximately 1.3×10^6 ft^3. This atmosphere will not support combustion if the oxygen content is depleted below approximately half that of normal atmospheric air. The total weight of air in the containment vessel thus is approximately 10^5 lb of which approximately 2.4×10^4 lb is oxygen.

If half of this oxygen were to burn, that is, approximately 12 000 lb, the heat released would be approximately 5×10^6 Btu.

The above discussion has some very important implications. The total heat released from the combustion of graphite by half of the oxygen in the containment vessel if all the heat remained in the core would raise the temperature of the core only about 25°F. Further, if all the graphite burned were graphite in the fuel elements, only about 400 lb of the 20 000 lb of graphite in the fuel would be burned. In view of the extent to which the building is compartmentalized, the fraction of the building atmosphere which could reach the fuel would probably be less than 20%, so even the graphite oxidation reaction which has appeared to be so serious should not release more than a few percent of the fission products if large amounts of air enter the reactor cooling system.

The heat released by combustion of the graphite may also be compared with the heat capacity of the concrete in the building. Since about 16 000 yd^3 of concrete is required in either the EGCR or the HGCR-5, the heat capacity of this concrete is approximately 3×10^6 Btu/°F temperature rise. If only 1% of the concrete were to rise in temperature, that 1% would have to increase in temperature only 20°F in order to absorb all the heat released by reaction of half the oxygen in the containment shell with the graphite. Since the graphite burning reaction would take place over relatively long periods of time, at least 10 hr, there should be ample time for heat transfer from the gas to the concrete. This is particularly true since only through very widespread dispersion of the combustion products could there be a uniform consumption of the oxygen from all the atmosphere in the containment vessel.

It seems likely that access of oxygen to the reactor core would be restricted by the devious paths which the air would have to follow to reach the reactor core through the shield. The atmosphere within the shield is only about 2% of the total atmosphere in the containment vessel, so the amount of graphite combustion that could occur would be quite limited, since the combustion products would simply be recirculated through the reactor with relatively little diffusion through openings in the pressure vessel and shield. In the HGCR-5, although the greater part of the

heat would probably be removed through the steam generator by thermal-convection circulation of gas within the reactor pressure envelope, the coolers at the top of the HGCR-5 shield which cool the air in the annulus between the pressure vessel and the shield would be adequate to remove the heat from the graphite oxidation reaction.

The possibility of using an inert atmosphere inside those portions of the reactor building enclosed within the shield was investigated, but the resulting limitations did not seem to warrant the cost and nuisance associated with maintaining such an atmosphere. Further, the character of any major rupture of the reactor gas system pressure envelope is inherently unpredictable, so any attempt to maintain an inert atmosphere locally is likely to be upset by the mode of failure. Using an inert atmosphere inside the entire containment shell would be undesirable, since it would seriously interfere with inspection and maintenance activities.

It should be pointed out that a statistical survey of pressure vessels built to the ASME code indicates that only one vessel in 1000 fails during its operating life; and unless the material is brittle or the failure is induced by a detonation type of explosion, the failure will be simply a small split. The probability of a failure in a vessel built to meet nuclear plant standards should be substantially smaller. With such a small probability of a major pressure envelope rupture, it hardly seems worthwhile to go to much extra expense or difficulty to reduce the effects of a major burst failure in the pressure envelope as long as the outer containment shell integrity can be maintained. This is particularly true since it seems doubtful whether any such failure could be repaired because most of the pressure envelope would be in regions too radioactive to be accessible even for a good inspection. If such a failure did occur, the reliability of the rest of the primary pressure envelope would also be in question, so even if a repair could be made, it is doubtful whether further operation with the repaired system would be in order. With only one chance in a thousand of such a failure, it does not seem worthwhile to spend more than one part in a thousand of the cost of the

plant ($75,000 for a $75,000,000 full-scale plant) to reduce the consequences of such a failure if it does not endanger the public.

The system has been designed so that all the shield plugs inserted into the reactor pressure envelope are aimed in such a fashion that, if one of them were to blow out (accident No. 8 of Table 7), at least 5 ft of concrete or the equivalent would be interposed between it and the containment shell. Most of the penetrations for the blower rotor assemblies and for fuel-handling and fueling provisions are located near the bottom of the reactor. The balance, those for the control rod drive mechanisms, are located at the top inside an enclosure. A heavy layer of material at the top of the enclosure is designed to absorb the energy from the missile formed if one of the shield plugs were to blow out.

Routine Hazards

To avoid the need for continuous ventilation of the containment shell and the special instrumentation, fast-acting valves, etc., that this would require, the plant has been designed on the premise that ordinarily there would be no one within the reactor containment shell. A routine inspection tour requiring perhaps 1 hr would probably be made each day, and occasional maintenance of such components as the blower lube oil system would be necessary. The principal hazard to the men carrying out this work would be small leaks of contaminated gas, which must be expected from time to time during the life of the plant. Since the plant has been designed so that all portions of the reactor cooling-gas system are enclosed within steel-lined rooms that are pressuretight and isolated from the balance of the plant, rather small leaks (less than 10 liters/min) would be localized and could be tolerated for extended periods until the reactor could be shut down conveniently. Medium-sized leaks (over 100 liters/min) would be sufficiently hazardous to justify a prompt shutdown and a fast pumpdown of the system to minimize dispersal of contamination.

The degree of leaktightness of containment shells has been widely discussed. The British have been disinclined to count on obtaining a leakage rate under 0.1%/day. However, the ART containment shell had a

demonstrated inleakage rate of only 10^{-6}%/day. Both the Hallam Reactor and the Humboldt Bay plants are designed with intermediate containment envelopes (steel liners in concrete) which are not designed to withstand much pressure but are specified to be leaktight to 0.001%/day to prevent small leaks from contaminating the interior of the main containment shell. The concrete pit for the ARE reactor, dump tank, and pumps was closed with concrete slabs and the joints sealed with asphalt. The inleakage to these pits under a pressure differential of 1 in. of water was estimated to be approximately 50 cfm; and when this pressure differential was imposed, it was found to be very effective in reducing the diffusion of gaseous fission-product activity out into the building. Hot cell experience indicates that one of the tightest ORNL hot cells built has an inleakage rate equivalent to 6 to 8 cfm for a cell roughly 7 ft on a side. However, it is believed that the bulk of this inleakage occurs through a rather crude seal for the blower shaft. Table 8 summarizes the above remarks and presents some additional data of interest.

Each of the pressure-tight rooms would have a fan to recirculate the air through an absolute filter to remove particulate activity and

Table 8. Typical Leakage Rates

Component	Leakage Rate
ART containment vessel, 24-ft-i.d., 40-ft-high, welded flanges (vacuum test)	4×10^{-5} cm^3/sec (10^{-6}%/day)
Specification for steel shield liners of Hallam and Humboldt Bay reactor plants (vacuum test)	0.001%/day
ARE concrete pit for reactor, dump tank, and pump, 30 000 ft^3, tarred joints (at 1-in.-H_2O suction)	300%/day
ORNL hot cell for handling alpha activity, 400 ft^3, steel lining, rotating shaft penetration (3-in.-H_2O suction)	4000 cm^3/sec (2400%/day)
Conoseal flanged joints 36 in. in diameter (10^{-5} cm^3 STP/sec at 600 psig and 200°F helium, estimated by G. Forrest of Aeroquip; data for Dragon Project test flanges are consistent with this value)	10^{-5} cm^3/sec

concentrate it partly to keep the room clean and partly to improve the sensitivity of detection. The filter installations envisioned in each case employ a standard ceramic unit about 2 ft square and 1 ft deep manufactured by Flanders Filters, Inc., Riverhead, N. Y. These units remove particles down to 0.1 μ with an effectiveness of 99.97%. Each is mounted at the inlet to a 300-cfm blower and arranged to permit withdrawal of the filter into a shielded cask by remote-handling techniques. (The capacity of one of these units is 1300 cfm at about 1-in. H_2O.) In addition, a duct having a flow passage area of about 1 ft^2 would connect each pressure-tight room to the stack through a filter and a 1300-cfm blower in the auxiliary blower room. The latter system will normally be tightly closed off to prevent contamination from a sudden leak from escaping outside the building, but it would be used when needed for venting off whatever gas leaks into the room, for purging the room to permit entry of personnel, and for maintaining a negative pressure in the room to reduce activity dispersion by air convection and back diffusion if the room must be opened while some airborne contamination might be present.

To reduce the probability of an accidental discharge of activity up the stack, the reactor containment shell itself would not normally have a continuous supply of ventilating air during reactor operation. When desired or necessary, a relatively small purge flow of 2600 cfm discharged through filters to the stack would give approximately two changes per day of the atmosphere in the building. This ventilation rate would be sufficient to accommodate a crew of 130 men working continuously within the containment shell, a much larger crew than any likely to be required even during construction. A 2-ft-diam steel stack is adequate for this flow rate.

The building ventilation problems posed by small leaks from the reactor coolant system are indicated by the rough estimates summarized in Table 9. While the calculations of Table 9 are studded with assumptions, they do give some idea of what to expect from the proposed system. It was assumed that airborne particulate activity will not be the controlling factor, since most of it should be removed by plate-out in the steam generator, filters in the helium purification system, or filters in the

Table 9. Rough Estimate of Factors Related to Leakage of Contaminated Gas from the HGCR-5

Total activity having a half-life of 1 hr or more	10^9 curies
Total activity leaking to helium coolant	10^5 curies
Helium system volume (at 500 psi)	700 m^3
Activity in helium	150 curies/m^3
Outer containment shell volume	4×10^4 m^3
Allowable concentration of Kr^{85} for 4-hr/wk exposure	6×10^{-5} curies/m^3
Total activity allowable in atmosphere in reactor building	2.4 curies
Maximum Kr^{85} activity in helium assuming that 5% of Kr^{85} activity in fuel leaks to helium after 1 yr of operation	70 000 curies
Leakage from high-pressure helium system	0.01%/day
Kr^{85} leakage from high-pressure helium system	7 curies/day
Volume leakage from high-pressure helium system	2%/wk
Rate of pressure rise in tank housing control rod drives (maximum for building) (vol = 200 m^3)	8 in. H_2O/wk
Reactor building air change rate for maximum acceptable activity concentration	
No intermediate containment	300%/day
Intermediate containment (0.1%/day diffusion)	0.1%/day

pressure-tight rooms. Thus the inert gases will constitute the dominant source of activity. For the sealed rooms envisioned for the HGCR-5, by far the most serious source of activity was found to be Kr^{85}, which has a 10-yr half life. Note that the A^{41} in the air space inside the reactor shield is also confined by the proposed arrangement.

The last few lines of Table 9 indicate that, if limited access to the containment shell is to be permitted but the space is not to be ventilated continuously, pressure-tight rooms are necessary around the flanged joints closing the reactor gas system if the leakage from such joints is 0.01% of the reactor cooling-gas system volume per day. However, tests on both the ART containment vessel and Conoseal joints indicate that the

leakage might be kept to as little as 10^{-5}%/day of the system volume. If this should prove possible, the contamination level of the atmosphere in the HGCR-5 containment shell would be sufficiently low without the intermediate containment to permit an operator to spend 4 hr/wk in the building if it were ventilated at the rate of 3 cfm, i.e., 0.3%/day. Since the incremental cost of providing the pressure-tight rooms is not large and since most of them are required for maintenance, it is clearly best to include them and maintain the proposed degree of isolation.

9. MAINTENANCE

The techniques and equipment suitable for carrying out maintenance operations for the HGCR-5 plant of Fig. 19 depend in substantial measure on the amounts of activity deposited in various parts of the system and the consequent radiation dose level in the vicinity of the equipment to be maintained. If it is assumed that roughly one part in 10 000 of the fission products are released from the fuel, the total amount of activity in the contaminated gas system will be about 10^5 curies. Of this, the bulk will be either rare gases that can be transferred to the helium storage tanks or material which will deposit as a solid coating on the steam generator tubes. These tubes present about half of the surface area in the system contacted by flowing gas, and they include both the first surface substantially cooler than the gas to be contacted after leaving the reactor core and the coolest surface area seen by the gas in any part of the circulating system. The amount of activity which would deposit in parts of the system other than the steam generator or remain suspended in the main gas system in particulate form is very difficult to estimate. Experience both at Calder Hall and with the Homogeneous Reactor offgas system indicates that over 99% of the particulate activity suspended in the gas should be removed by the bypass purification system.

In addition to the uncertainties associated with the rates of release of the various fission products and their tendency to deposit on the steam generator surfaces, there is a substantial uncertainty in the effectiveness of decontamination operations with cleaning solutions such as detergents or oxalic acid. Recent tests indicate that decontamination factors of 100 to 1000 may be obtainable.

In spite of the large uncertainties outlined above, it is helpful in appraising the maintenance problems to make some reasonable estimate of the amounts of activity to be expected in each of the major components likely to require maintenance. This was done by first summarizing the major surface areas in the system in Table 10 and then estimating the amount of activity that might be deposited on the surfaces of each component. Amounts of activity that might be deposited in filters were

Table 10. Surface Areas of Major Components in the HGCR-5 Helium System

Component	Surface Area (ft^2)	
	High-Velocity Zones	Nearly Stagnant Zones
High-Pressure System		
Fuel elements	23 700	
Moderator	36 000	75 000
Pressure vessel and baffles	15 000	12 000
Steam generator tubes and headers	82 000	
Blower rotor	50	
Blower casing	75	75
	160 000	90 000
Low-Pressure System		
Turntable tanks		12 000
Housing for charge and service machine		600

estimated from the data in Table 9, and the results are summarized in Table 11. In general, the upper limit given represents the maximum amount of activity to be expected under reasonably normal conditions. A major accident such as a partial meltdown of the core, of course, could lead to much larger amounts of activity distributed around the system.

The size and weight of the shield casks required for the removal of components during maintenance operations has also been estimated and tabulated for the various items in Table 11. Two major assumptions were made in making these latter estimates; first, the fuel would be allowed to decay for one month on the spent fuel storage turntable before attempting to remove it from the system, and, second, replacement of a component in the helium purification system would not be carried out until it had been valved off and allowed to decay for one to three months. This procedure would apply particularly to such items as the carbon traps and molecular

Table 11. Rough Estimates of the Incidence of Difficulties Requiring Maintenance, the Maximum Amounts of Activity to Be Expected Normally, and the Shielding Required to Give a Dose of 100 mr/hr at 30 ft for Major Components of the HGCR-5

Component	Estimated Incidence of Difficulty (times/year)	Estimated Maximum Activity for Normal Operation (curies/unit)	Component Size (ft)	Shield Size (ft)	Number Required	Shield Weight (lb)	Shield Thickness (in.)
Blower	0.3	10	4ϕ[a] × 2	4.5ϕ × 2	1	6 000	2.3
Control rod	2	1000	0.2ϕ × 10	1.5 × 12	2	12 000	7
Control rod drive	2	1	1ϕ × 5	None required	0		0
Fuel elements	25	10^6	0.5ϕ × 5	2.6 × 7.5	10	30 000	13
Helium purification system							
Filter	2	10^3	1ϕ × 10	2.2ϕ × 12	2	26 000	7
Charcoal trap	0.5	10^3	1ϕ × 20	2.2ϕ × 21.5	2	50 000	7
Oxidizer	0.5	10^3	1ϕ × 10	2.2ϕ × 12	0	26 000	7
Molecular sieve	0.5	10^3	1ϕ × 10	2.2ϕ × 12	0	26 000	7
Heat exchanger	0.2	10^2	1ϕ × 10	2.2ϕ × 12	0	16 000	4.6
Helium transfer compressors	0.3	1	3ϕ × 6	None required	0		0
Core graphite	0.1	10^3	1ϕ × 16	2.2ϕ × 18	0	42 000	7
Shield air coolers	0.2	10	2.5 × 2.5 × 10	3 × 3 × 11	1	12 000	2.3
Ventilating system filters							
Contaminated rooms	1	100	2 × 2 × 1	3 × 3 × 2	2	8 000	4.6
Others	1	10	2 × 2 × 1	2.5 × 2.5 × 1.5	2	3 300	2.3
Service machine ram drive	1	0.1	1 × 1 × 3	None required	0		0

[a] ϕ signifies diameter.

sieves and implies that more than ample system capacity should be provided in the detail design. The shields are not intended to be adequate for shipment but only for handling operations in the vicinity of the reactor building, and hence were designed to give a dose level of 100 mr at 10 ft from the center of the shield. In many instances it would be necessary only to move the component to the equipment maintenance hot cell within the reactor building where it could be repaired or decontaminated and removed from the reactor building for more elaborate servicing operations.

Control of gaseous and gas-borne particulate activity presents major problems when a contaminated gas system is opened. In general, much the same procedures would be followed in handling the various components. Space has been provided in the building layout so that bagging techniques can be used in the removal of all the components; that is, plastic bags would be slipped over the joint prior to breaking it and tightly closed with a device similar to a hose clamp fitted around an annular surface provided for the purpose. The joint would be broken, the component withdrawn sufficiently to seal the plastic bag with double seams using a warm iron, the portion between the seams cut, and the part placed in a shield cask if one is required.

In some instances it may be desirable to close off ducts with inflatable bladders of the type commonly used in natural gas mains during maintenance operations. These bladders will serve to minimize leakage of air into the helium system or contaminated gas out into the room during the time when the flange is open and may be employed to isolate the component hydraulically so that it may be decontaminated in situ prior to removal. If wet decontaminating operations are carried out, bagging techniques will probably not be necessary. The inflatable bladders should prove very useful in the removal of a blower rotor assembly or in the replacement of a lower valve in one of the turntable gas locks in the hot cells.

Maintenance of the mechanism for the core service machine falls in two major areas. The parts likely to become seriously contaminated are the various servicing heads for the ram. These would be raised from the equipment storage turntable into a hot cell for inspection and maintenance

or decontamination and removal for contact maintenance. The ram-drive mechanism itself should not become seriously contaminated and would be much over-designed so that it should require little maintenance, especially since it would operate at low temperatures in a low radiation dose field so that it could be well lubricated. In the event that any of the ram-drive components should require maintenance, shielding could be provided by rotating each storage turntable so that a tank permanently mounted on it would lie against the opening to the turntable vault, and the tank would be filled with water. This would shield the core service area from radiation from activity in the turntable tanks. If necessary, the shuttle zone could be decontaminated with water spray nozzles permanently installed in the walls of the steel housing for this portion of the contaminated gas system, but this probably would not be necessary. Particulate activity reaching the ram-drive mechanism would be minimized by a labyrinth seal just above the ram guide bearing in the shielding at the top. A small blower would be arranged to recirculate helium continuously from the space above the labyrinth seal through a filter and back into a buffer zone in the labyrinth seal to minimize back diffusion of particulate activity.

All the ram-drive mechanisms involving rubbing surfaces in which wear might be a problem have been designed for removal through rubber gasketed ports in the housing. In the very unlikely event that the entire ram-drive and housing assembly requires removal, space has been provided so that the assembly could be decontaminated in situ and removed through the hatch over the core service area.

10. COST ESTIMATES

HGCR-5 Cost Estimate

One of the most important measures of the extent to which the design effort covered by this report has achieved its objectives is a cost estimate of the HGCR-5 plant. The steam conditions were originally chosen to be those of the TVA Colbert Unit No. 5 coal-fired steam plant, in part so that the cost estimate could be directed simply at the steam-raising equipment without bothering with the turbine plant, feed water system, switch yard, or other components. In making the study, two representative nuclear plants were also considered to provide a basis for both cost estimates and comparisons. The EGCR was chosen as one of these partly because it makes use of essentially the same sort of a containment shell and similar concrete shielding, and partly because a quite complete set of cost data was available to provide a check list so that important cost items would not be overlooked. The British Dungeness gas-cooled reactor plant was included since it is of about the same output as the HGCR-5, and the cost of the complete plant is understood to be about $280.00/kw. With the material quantities and cost information for these two plants, it appeared that a good estimate could be made for most items in the HGCR-5. The resulting costs were then compared with the coal-fired steam plant for roughly corresponding items. The results of this study are summarized in Table 12 for all four plants. Note that three of them give essentially the same power output. More detailed data on the reactor system are given in Table 13 for the EGCR and HGCR-5.

In appraising these data it is apparent that the cumulative effects of the reductions in reactor size made possible by the increased allowable fuel element temperature and surface area make it possible to reduce both the size and the cost of the gas-cooled reactor plant. Important contributing factors are the increases in the gas system pressure and overall thermal efficiency, since these factors also help to reduce the reactor and steam generator size for a given electrical power output.

The cost estimate for the HGCR-5 reactor building given in Table 12 was derived from the data shown for the EGCR building. The two are the same diameter, but the EGCR building is 30 ft taller and requires about half again as much concrete. On the other hand, the HGCR-5 building requires steel liners in the vaults for the reactor and blowers, the hot cells, and the core service area. These steel liners have been estimated to cost about $250,000 and weigh about 500 000 lb. Compartmentalization of the building to restrict dispersion of airborne activity appears to have little effect on the cost of the ventilating system, except that a larger number of filters is required. The cost of these is about $1000 apiece, and about 20 units will be required. The incremental cost of the well for the charge and service machine appears to be only about $40,000. In the balance, the building for the HGCR-5 appears to be a little less expensive than that for the EGCR.

The adequacy of the floor space provided in the two buildings, particularly from the standpoint of maintenance, is an important question. Table 14 was prepared to show the space allocations in the two plants to help appraise the adequacy of the floor space in the HGCR-5 building. This indicates that nearly half of the space in the EGCR building either is not used or has been allocated for test loops or the burst-slug detection system. Otherwise, the sizes of the components and the numbers involved are consistent for the two reactors in most cases. The principal item for which the HGCR-5 allocation is not in line with that for the EGCR is the space for the blower seal systems. The large amount of space required for the EGCR for the seal equipment stems in part from the use of water rather than oil as a seal-buffering medium and in part from the elaborate requirements for spare and reserve capacity to ensure operation of the blowers in the event of a failure of any one item in a system. Since the HGCR-5 has been designed to assure cooling by natural thermal convection, a blower failure is not a vitally serious matter, and elaborate provisions for spare components and reserve liquid tanks are not necessary.

The cost items of Table 13 have been arranged in the same order as has been used in the detailed cost estimate sheets for the EGCR. In

Table 12. Summary of Direct Costs for the Boiler Plant Portion of Four Typical Power Plants

	EGCR		HGCR-5		Dungeness Dimensions and Material Quantities[a]	Unit No. 5 of the TVA Colbert Steam Plant		
	Dimensions and Material Quantities	Cost (dollars)	Dimensions and Material Quantities	Cost (dollars)		Dimensions and Material Quantities	Cost (dollars)	Description
Reactor building	114 ft diameter, 216 ft high	$\times 10^3$	114 ft diameter, 179 ft high	$\times 10^3$		198 ft long, 177 ft wide, 182 ft and 6 in. high	$\times 10^3$	Boiler and bunker bay building
Concrete	23 000 yd^3	1,565	16 000 yd^3	1,080	10^5 yd^3	5300 yd^3	244	Superstructure
Containment shell and related items	2.6×10^6 lb	1,761	2.16×10^6 lb	1,600		4×10^6 ft^3	3,637	Superstructure concrete
Building and miscellaneous services		1,123		1,420			880	Building and miscellaneous services
Total reactor building volume	2×10^6 ft^3	4,449	1.5×10^6 ft^3	4,100	14×10^6 ft^3	4×10^6 ft^3	4,761	Total building
Reactor								Furnace
Vessel and internal equipment	700 000 lb	2,555	750 000 lb	1,500	8×10^6 lb	1.7×10^6 lb	700	Walls and support structure
Control rods and drives	21	447	19	440			330	Soot blowers
						1.5×10^6 lb	1,490	Coal pulverizers, burners, and piping
Graphite	313 000 lb	825	440 000 lb	1,100	9×10^6 lb	2.7×10^6 lb	1,100	Preheaters
Miscellaneous insulation, etc.		1,030		260		800 000 lb	600	Miscellaneous insulation, etc.
Installation		175		175			1,400	Installation
Total		5,032		3,475			5,620	Total
Blowers (main coolant)								Blowers (forced draft)
Blowers and drives	6200 hp	610	40 000 hp	3,000	72 000 hp	8000 hp	400	Blowers and drives
Piping		322	(included with vessel)			0.8×10^6 lb	450	Forced and induced draft duct
Secondary cooling system		720		100				
Total		1,652		3,100			850	Total
Steam generators								Steam generator
Tubing (including inspection)	50 000 lb	70	221 000 lb	1,220		5×10^6 lb	4,800	Tubing and shell
Shell	290 000 lb	400	430 000 lb	800	5.4×10^6 lb			
Piping and manifolds	30 000 lb	40	100 000 lb	200				
Fabrication	4400 joints	50	13 000 joints	900		1.6×10^6	1,600	Piping and manifolds
Thermal insulation		25		45				
Installation, shipment, and miscellaneous		200		400		50 000 joints	2,300	Installation
Attemperators		85	(none required)					
Total		870		3,565			8,700	Total

[a]Costs not available.

Table 12 (continued)

	EGCR		HGCR-5		Dungeness	Unit No. 5 of the TVA Colbert Steam Plant		
	Dimensions and Material Quantities	Cost (dollars)	Dimensions and Material Quantities	Cost (dollars)	Dimensions and Material Quantities[a]	Dimensions and Material Quantities	Cost (dollars)	Description
Coolant charging and storage system		$\times 10^3$		$\times 10^3$			$\times 10^3$	
Stack and vent gas system		254		100		2830 yd^3	244	Stack precipitator
Pumps and tanks	244 000 ft^3	333	286 000 ft^3	500				
Total		587		600				
Coolant purification		266		500				
Fuel handling and servicing equipment								Fuel and ash handling equipment
Remote handling machines	2×10^6 lb	5,075	50 000 lb	1,250	2×10^6 lb		3,439	Coal conveyors and bunkers
Shielding casks and special equipment		1,047		1,880			1,073	Ash handling
Total		6,122		3,130			4,512	Total
Instrumentation and controls (other than burst-slug detection system)		1,200		1,000			835	Instrumentation and controls
Burst-slug detection system		1,200						
Decontamination and radioactive waste treatment equipment and facilities		426		1,000				
System total		21,804		20,470			25,522	

Table 13. Detailed Cost and Quantity Estimates for the EGCR Reactor Plant Equipment and Corresponding Values for the HGCR-5

Cost Code	Description and Materials	EGCR				HGCR-5			
		Quantity	Labor	Material	Total	Quantity	Labor	Material	Total
22	Reactor plant equipment								
	220 Reactor equipment								
	.1 Reactor vessel								
	.12 Pressure vessel and supports								
	.121 Vessel – fabrication and erection	720 000 lb		$1,800,000	$1,800,000	620 000 lb		$1,240,000	$1,240,000
	.122 Bellows seal expansion joints			60,000	60,000				
	.123 Other special purchases			50,000	50,000				
	.125 Erection equipment and miscellaneous expense		$ 10,000	60,000	70,000		$ 10,000	60,000	70,000
	.13 Vessel internals								
	.131 Core supports and retainers	70 000 lb		550,000	550,000	130 000 lb		260,000	260,000
	.132 Erection and miscellaneous expense		60,000	35,000	95,000		60,000	35,000	95,000
	.2 Control rod mechanism								
	.21 Control rods (by UCNC)	21		(*97,000)	(*97,000)	19		97,000	97,000
	.22 Drive mechanisms	21	35,000	350,000	385,000	19	35,000	350,000	385,000
	.3 Insulation								
	.31 Interior – reflective			400,000	400,000				
	.32 Exterior – refractory			30,000	30,000			30,000	30,000
	.6 Graphite core								
	.61 Graphite (by AEC)	330 000 lb		(*725,000)	(*725,000)	440 000 lb			1,000,000
	.62 Core gas seals			40,000	40,000				
	.65 Erection and miscellaneous expense		70,000	60,000	130,000		70,000	60,000	130,000
	.7 Dummy fuel assemblies								
	.71 Top dummy assembly			100,000	100,000				
	.72 Bottom dummy assembly			500,000	500,000			200,000	200,000
	Total 220 – HKF		$175,000	$4,035,000	$4,210,000		$175,000	$2,332,000	$3,507,000
	(UCNC and AEC)			(*822,000)	(*822,000)				
22	Reactor plant equipment								
	221 Heat transfer system								
	.1 Primary coolant system								
	.11 Blowers and auxiliaries	6 200 hp	$ 40,000	$ 570,000	$ 610,000	40 000 hp	$300,000	$3,000,000	$3,300,000
	.12 Main coolant piping		95,000	227,000	322,000				
	.2 Secondary coolant system								
	.21 Vessel cooling compressors		8,500	151,500	160,000				
	.22 Piping and valves		200,000	350,000	550,000			100,000	100,000
	.23 Nozzle and service machine coolers		2,000	11,000	13,000		10,000	100,000	110,000

Table 13 (continued)

Cost Code	Description and Materials	EGCR Quantity	EGCR Labor	EGCR Material	EGCR Total	HGCR-5 Quantity	HGCR-5 Labor	HGCR-5 Material	HGCR-5 Total
.3	Steam generators and attemperators								
.31	Steam generators	370 000 lb	$ 33,000	$ 752,000	$ 785,000	750 000 lb	$400,000	$3,165,000	$3,565,000
.32	Attemperators		5,000	80,000	85,000				
.4	Coolant charging and discharging systems								
.41	Helium transfer system (HKF)		64,700	144,300	209,000		100,000	200,000	300,000
	(AEC)			(*9,000)	(*9,000)				
.42	Evacuation system		44,500	59,000	103,500		50,000	100,000	150,000
.43	Vent gas system		49,000	108,000	157,000		50,000	150,000	200,000
.5	Coolant purification and recovery systems								
.51	Blower seal leakoff recovery and purification system		40,000	141,000	181,000		100,000	400,000	500,000
.52	Low-pressure leakoff recovery system		27,500	57,800	85,300		30,000	60,000	90,000
.9	Coolant receiving and storage facilities (HKF)		4,400	7,100	11,500	35 000 ft^3	15,000	150,000	165,000
	(AEC)			(*41,000)	(*41,000)				
	Total 221 — HKF		$613,600	$2,658,700	$3,272,300		$1,055,000	$7,425,000	$8,480,000
				($50,000)	($50,000)				
22	Reactor plant equipment								
222	Fuel handling and storage facilities								
.2	Assembly and disassembly equipment								
.21	Charge machine		$ 50,000	$2,700,000	$2,750,000		$ 40,000	$ 400,000	$ 440,000
.22	Service machine		50,000	2,275,000	2,325,000			210,000	210,000
.23	Loading and rehearsal equipment		16,000	277,000	293,000		20,000	200,000	220,000
.24	Discharge and transfer equipment		11,000	187,000	198,000		20,000	200,000	220,000
.26	Miscellaneous plugs, shields, nozzles, tools storage pits, etc.		22,000	311,000	333,000		100,000	1,040,000	1,140,000
.5	Spent fuel cooling, inspection, and dismantling facilities, including containers, racks, and tools		20,000	205,000	225,000		100,000	800,000	900,000
	Total 222		$169,000	$5,955,000	$6,124,000		$280,000	$2,850,000	$3,130,000

Table 14. Space Allocation Within the Containment Shell

	EGCR		HGCR-5	
	Floor Space (ft^2)	Volume (ft^3)	Floor Space (ft^2)	Volume (ft^3)
Reactor and shield	1 950	146 000	1 500	70 000
Steam generator and shield	700	40 000	3 000	140 000
Ducts		71 800		3 000
Blowers, drives, and shield	3 300	70 000	2 400	36 000
Blower lube oil system	200	1 800	750	7 500
Blower seal fluid system	4 000	52 000	750	7 500
Helium transfer system	3 100	48 000	2 000	30 000
Helium purification system	140	3 500	660	7 920
Helium storage system			2 600	55 000
Reactor vessel cooling system	775	20 000		
Shield cooling system	780	25 500	100	2 000
Fuel handling and core servicing	7 900	404 000	4 700	270 000
Control rooms for remote handling	440	4 400	600	7 000
Spent fuel storage	430	32 700	700	10 000
Building heating and ventilating	7 000	129 000	600	7 000
Motor control centers	440	9 400		
Building crane	4 100	41 500	1 000	100 000
Storage	1 800	27 400		
Elevator	80	15 000	160	10 000
Storage space	1 800	27 400		
Corridors and unutilized space	16 400	397 000	3 700	670 000
Burst-slug detection system	1 130	22 300		
Experimental loops	11 620	218 100		
Total	68 085	1 806 800	25 220	1 432 920

comparing quantities and costs it should be noted that the pressure vessels for the two reactors have roughly the same dimensions and weight, but they differ in that the EGCR pressure vessel requires much closer tolerance machining of both the vessel and the internal equipment. This requirement in the EGCR stems from the complex core support system inherent in the approach taken to accommodate both differential thermal expansion between the graphite and the steel and graphite shrinkage under irradiation. This complexity and the resulting expensive machining

operations have been avoided in the HGCR-5 through the use of slightly bowed graphite moderator blocks. The latter arrangement also avoids the complex provisions for seals to prevent flow bypass around the EGCR core. Further, no top grid is required in the HGCR-5, since the pressure drop across the core is not sufficient to blow out either the moderator blocks or the fuel elements. These factors, together with the greatly reduced number of nozzles and the relaxed tolerances on their location, should result in a significant reduction in the pressure vessel cost relative to that for the EGCR.

The weight of the graphite is greater in the HGCR-5, and the cost was increased accordingly. The number of control rods and drives is slightly smaller in the HGCR-5 (although the reactor core is a little larger than the EGCR) because elimination of the experimental loops reduces the amount of control required for safe operation. The high conversion ratio of the all-ceramic fuel elements also helps by greatly reducing the compensation required for burnout of the fuel elements. The basic design of the HGCR-5 was carefully worked out to avoid areas in which the pressure vessel must be insulated from gas at the reactor outlet temperature. This has made it possible to eliminate the expensive reflective insulation required in the EGCR. The EGCR bottom dummy assemblies are quite complex, since they include both a combination latching and seal system to minimize bypass flow up through the channel and an adjustable orifice to permit control of the gas flow through the channel to flatten the temperature distribution radially across the reactor. The absence of a hot spot problem in the HGCR-5 makes it possible to employ the equivalent of the bottom dummy assemblies in a simpler form to hold the fuel elements in the reactor.

In reviewing Table 13, it is hard to believe that a reactor of 1200 Mw could be built for less than one designed to produce 88 Mw. The most important single factor in reducing the cost of the HGCR-5 is, of course, the very much higher power density, but careful design to avoid expensive machining and complicated and expensive reflective insulation has also reduced costs. The question appears to be less one of the correctness of the cost estimate than one of the adequacy of the design. If the design

is indeed adequate from the reactor physics, heat transfer, fluid flow, structural, hazards, and maintenance standpoints, it appears that the cost estimate is not greatly in error.

The blowers are a major cost item. While the cost is dependent primarily on the power requirement, it also depends in substantial measure on the type of drive employed. In large sizes, steam turbines are not only substantially more reliable but less expensive than electric motors. It is probably for these reasons that the Dungeness plant makes use of steam turbines for the blower drives. It is believed that no pony motors would be required for the HGCR-5 since experience with a prototype unit should make it possible to start the plant up on thermal convection. If the reactor were one unit of a multi-unit plant, steam from other boilers would be available. If not, the power required to run the blowers at 10% speed would be only about 500 hp for all three blowers, so a small oil-fired steam boiler costing about $50,000 could be provided to give sufficient steam to operate the blowers during startup and shakedown operations.

The allowance for the main gas system piping for the HGCR-5 was included with that of the main pressure vessel. The $100,000 item for HGCR-5 piping and valves was included for back-flow-operated louver valves to be mounted in the blower outlets to prevent back flow through a stopped blower. The HGCR-5 design is such that no secondary pressure vessel cooling system is required. The $20,000 item in this category for the HGCR-5 was for circulation of cooling air over the housing surrounding the fuel shuttle zone and for a small blower to recirculate helium through a labyrinth seal at the top of the ram for the charge machine.

The cost of the heat exchangers inside the top of the shield to cool the reactor shield air with recirculated water appears to be substantially less than that required for the EGCR cooling system, but the same amount of money was allocated for the HGCR-5. An extra $100,000 was allocated for special provisions to isolate one shielded vault from another to prevent the dispersion of activity, partly to cover the extra costs of checking out the installation and partly for the extra costs of rubber-gasketed steel hatch doors over the shielded vaults.

Because of its importance, a fairly complete breakdown of components contributing to the cost of the steam generators has been included in Table 12. A careful review of the weight of tubing, the weight of the shell, the number of tube-to-header welds, and the unit cost for these items indicates that the steam generator, as designed, should cost only about $3,500,000, an amazingly low figure when compared with the costs of the EGCR or Colbert steam generators. Again an examination of the quantities of materials required indicates that the question is less one of cost estimation than it is of adequacy of the design. A careful review of the temperature distribution, temperature difference, the excellent heat transfer coefficients attainable with helium at 500 psi, and related factors indicate that the low unit cost of the HGCR-5 steam generator as compared with the costs of the EGCR steam generators is reasonable. Further, a comparison with the coal-fired plant, allowing for the difference in gas pressure, the effects of soot and ash deposits, hot spot considerations, and the uniformity of the heat flux distribution through the steam generator, also seems to make the much lower price of the HGCR-5 steam generator appear reasonable. The once-through design of the HGCR-5 coupled with the control scheme contemplated makes an attemperator unnecessary.

The helium purification, charging, and storage system for the HGCR-5 is quite different from that of the EGCR in that 2:1 pressure ratio, 20-stage, centrifugal compressors are employed with staged pressure levels in the storage tanks rather than 2000-psi diaphragm-type pumps with 2000-psi storage tanks. This different system gives a much higher flow capacity with little increase in the cost of the pumping equipment and tanks. The helium purification system for the HGCR-5 follows the design developed for the pebble-bed reactor. The size of the system required is in substantial measure dependent on the helium system volume, which is essentially the same for the two reactors. The purification facilities provided for the HGCR-5, however, entail somewhat more equipment, so that the cost was estimated from detailed data for the individual components and found to be roughly twice that for the EGCR.

The stack and vent gas system for the HGCR-5 requires a much smaller stack than that of the EGCR because the shield cooling is accomplished

with water rather than by circulating large quantities of air and discharging it up the stack. A single small stack has been provided in the HGCR-5 to take care of both the vent gas and the building ventilating system discharge.

The fuel-handling and servicing equipment for the core constitutes a major cost item. Table 15 was prepared to show the equipment selected for the HGCR-5. A summary of these data was then entered in Tables 12 and 13. Grouping of the various cost items was of necessity rather arbitrary. In the HGCR-5 a single machine carries out the functions of both the charge and the service machines of the EGCR. Further, the HGCR-5 machine is much lighter, simpler, and less expensive than the EGCR machines because it is designed for off-stream operation with the system depressurized. The large reductions in weight and cost obtained for the HGCR-5 seem to be justified by reports that a somewhat similar machine for the Dragon reactor will cost less than half a million dollars. It is interesting to note that the cost of fuel- and ash-handling equipment for the coal-fired plant of Table 12 is $4,500,000, a figure not much less than the $6,000,000 for the EGCR.

Table 15. HGCR-5 Remote-Handling Equipment and Hot Cells

Periscopes and television equipment	$ 200,000
General-purpose fuel-handling and servicing machine	400,000
Turntables and tanks	200,000
Hot cells (3)	600,000
General Mills manipulators (5)	400,000
Master-slave manipulators (6)	40,000
Mobots (3)	210,000
Machine shop and dimensional inspection equipment	200,000
X-ray and micrographic examination equipment	100,000
Casks	500,000
Total	$2,850,000

The instrumentation and controls for the HGCR-5 appear to be less costly than for the EGCR because the hazards are much less complex. As mentioned above, provision of excellent natural thermal convection means

that a blower drive failure should not have particularly serious consequences, and hence it is not necessary to provide elaborate instrumentation and control equipment to cope with any combination of emergency conditions in the blower lube oil, seal, drive, power supply, or other systems. It is interesting to note that the cost of the coal-fired steam plant instrumentation and controls approaches that of the corresponding items for a reactor.

The provisions for decontamination and concentration of radioactive wastes are relatively insensitive to the scale of the plant. While these facilities will probably be used much more intensively than those for the EGCR, the capital investment should not be more than about double that for the EGCR.

While no detailed cost data could be found for the large British gas-cooled reactor plants, Table 16 presents quantity data for the three latest plants for which the designs have been published. The layouts for all three plants are basically similar to that for Calder Hall, but they incorporate the improvements and refinements to be expected in third-generation plants. In each instance two reactors are employed to give a total plant electrical output of 500 to 550 Mw. The over-all cost for the Dungeness plant is reported to be about $280/kw.

The weight data of Table 16 for the Dungeness plant have been summarized in one column of Table 12 for comparison with the corresponding values for the EGCR and HGCR-5. It is apparent that, where data are available, the HGCR-5 requires much less material than Dungeness. The blower power is reduced to about half, while the other quantities are from 5 to 20% of the corresponding values for Dungeness. Except for leak-tightness, the quality control standards should be much the same for the three plants; hence the HGCR-5 reactor should be much less expensive.

In comparing the quantity and cost estimates for the HGCR-5 with roughly corresponding values for a coal-fired steam plant (which is under construction at the time of writing), the data indicate a lower cost for the HGCR-5 than for a conventional coal-fired steam plant. It should be mentioned that savings in the coal-fired plant made possible by such features as the once-through boiler, improved turbine-generator design,

Table 16. Quantity Data for Major Cost Items for the Latest Three British Gas-Cooled Reactor Plants

	Hinkley Point[a]	Trawsfynydd[b]	Dungeness[c]
Net electrical output	500 Mw	500 Mw	550 Mw
Heat output	1960 Mw	1740 Mw	1670 Mw
Graphite (for two reactors)			
Weight	4064 tons	3800 tons	4600 tons[d]
Volume	81 280 ft^3	76 000 ft^3	96 000 ft^3[d]
Pressure vessel (for two reactors)			
Weight	3400 tons	3400 tons	4000 tons
Internal volume	300 000 ft^3	226 000 ft^3	258 000 ft^3
Volume of steel	6876 ft^3	6600 ft^3	8000 ft^3
Heat exchanger shells			
Weight	3816 tons[e]	3800 tons[e]	2720 tons[f]
Internal volume	360 000 ft^3	311 400 ft^3	252 000 ft^3
Volume of steel	15 672 ft^3	15 600 ft^3	11 200 ft^3
Fuel weight (for two reactors)	740 tons	560 tons	600 tons
Concrete volume			
Reactor building	69 000 yd^3		
Total	300 000 yd^3	200 000 yd^3	
Reactor building internal volume (for two reactors)	11 730 000 ft^3		13 792 000 ft^3
Control rods (for two reactors)	216	370	
Blowers	84 000 hp[g]	74 400 hp[g]	72 000 hp[h]

[a]Nuclear Engineering, Oct. 1957 and Sept. 1958.

[b]Nuclear Engineering, Jan. 1961; and Nuclear Power, Nov. 1959.

[c]Nuclear Power, April 1961.

[d]Estimated.

[e]Twelve units.

[f]Eight units.

[g]Twelve units.

[h]Eight units.

and large capacity are currently expected to give a plant cost of about $120.00/kw, not including allowances for site preparation and related charges which were avoided by building this unit as an addition to an existing plant.

Comparison with Pressurized- and Boiling-Water Reactors

It is also interesting to attempt to compare the proposed HGCR-5, plant with some typical plants employing both pressurized-water and boiling-water reactors. Comparing quantity rather than cost data, Table 17 presents some of the more important values that give some indication of relative costs for three pressurized-water and one boiling-water reactor, together with the HGCR-5. The specific weights in pounds per kilowatt of net electrical output given for the reactor pressure vessel, the steam generator, and the containment vessel are particularly significant.

The cost of large pressure vessels increases with the thickness in such a way that the cost per pound for a 7-in.-thick vessel will be half again as much as for a 4-in.-thick vessel. Further, the stainless steel lining used in the water reactors adds substantially to the cost. Several other factors also favor gas-cooled reactors. For example, the pressurized-water reactors of Table 17 apparently were designed for a higher fast-neutron dose to the pressure vessel. Neglecting the latter factor, it appears that the all-ceramic gas-cooled reactor vessel should weigh only about 40% as much as the corresponding vessel for a water-cooled reactor, and the cost should be only 20% ($0.4/1.5 \times 1.3 = 0.2$) as much.

Similar reasoning applies to the steam generator, although the data available are less complete. The heat transfer coefficient for helium at pressures above 500 psi is sufficiently high that, with the large temperature differences available for all-ceramic reactors, the surface heat flux in the steam generator can be close to the upper limit allowed by much experience in boiler design, and much higher than the heat fluxes characteristic of steam generators for water-cooled reactors.

The weight and surface area per kilowatt of electricity will change very little with the plant output for the pressurized-water reactors, and

Table 17. Data on Factors Closely Related to Costs of Major Reactor Components

	Shippingport	Yankee	Dresden	Indian Point[a]	HGCR-5
Power					
Gross thermal, Mw	225	392	626	585	1170
Gross electrical, Mw	67	118	192	163 (+112)	500
Net electrical, Mw	60	110	180	151 (+104)	500
Net thermal efficiency, %	26.6	28	28.8	25.8	42.7
Pumping power, approximate net electrical, %	11.7	6.8	6.3	7.9	6
Power density, w/cm^3	75	52	29	76	23.3
Conversion ratio		0.53	0.6	0.5	0.95
Reactor pressure vessel					
Weight, lb	470 000	500 000	700 000	700 000	750 000
Wall thickness, in.	8.4	8	5 5/8	7	4
Inside diameter, ft	9	9.1	12.2	9.75	21.3
Height, ft	32.5	31.5	42	41.5	38
Design pressure, psi	2500	2500	1250	1800	500
Specific weight, lb/kw of electrical output	7.83	4.55	3.89	4.63	1.5
Steam generator					
Manufacturer	Babcock & Wilcox			Babcock & Wilcox	
Surface area (total), ft^2	9050	53 700			81 000
Type	U-tube	U-tube	U-tube	U-tube	U-tube
Tube diameter, in.	0.75				0.50
Number of tubes	921				7110
Tube length, ft	50				100
Weight of casing, lb	118 100				430 000
Weight of tubes, lb	20 700				221 000
Log mean temperature difference, °F	35				200
Electrical output, Mw	19.3				500
Specific weight, lb/kw of electrical output	7.2				1.5
Containment vessel					
Weight, tons		900	3500	2600	1108
Diameter, ft		125	190	160	114
Specific weight, lb/kw of electrical output		16.35	48.9	34.5	4.3

[a]The Indian Point plant uses a fossil fuel-fired superheater.

hence the Shippingport data are representative of the boiler specific weight values applicable to the other plants. While it might seem that the boiling-water plant should give a drastic reduction in the specific weight chargable to the boiler in the Dresden plant, nearly half of the boiling for that system is carried out with heat exchangers, and there is a large amount of steel both in the risers from the reactor and in the large primary circuit steam drum. Thus the saving in steam generator specific weight relative to the pressurized-water systems cannot be large. Since the same basic cost factors apply for the stainless steel lining and the thicker shells required at the higher pressures, it appears that the all-ceramic gas-cooled reactor should entail steam generator capital costs only about 10% of those for water-cooled reactors.

The containment problem is greatly eased for the gas-cooled reactor with a once-through steam generator, since the inventory of superheated water is drastically reduced. In fact, the wall thickness for the gas-cooled reactor containment vessel is determined by wind loads and is about double that required by hazards considerations. Thus the weight and cost of the containment vessel for the all-ceramic gas-cooled reactor should be only about 15 to 25% of the corresponding value for the water-cooled reactors.

Another factor favoring the cost of the gas-cooled reactor is the higher temperature and pressure steam plant. This not only reduces the cost of the turbine but permits the use of larger outputs in a single turbine-generator unit.

Elimination of the stainless steel fuel capsules in the all-ceramic fuel reactors should eliminate one item in the cost of fuel fabrication. The net cost of the uranium burned should also be much lower, since the conversion ratio should be much higher. These two factors should help to reduce the fuel cycle costs for the all-ceramic gas-cooled reactor.

REFERENCES

1. The ORNL Gas-Cooled Reactor, ORNL-2500, April 1, 1958.
2. W. B. Cottrell et al., The HGCR-1, A Design Study of a Nuclear Power Station Employing a High-Temperature Gas-Cooled Reactor with Graphite-UO_2 Fuel Elements, ORNL-2653, July 14, 1959.
3. A. M. Perry et al., Small Core Gas-Cooled Reactor Study, ORNL internal memorandum, September 1958.
4. Gas-Cooled Reactor Project Semiannual Progress Report for Period Ending June 30, 1959, p. 6, ORNL-2767, August 14, 1959.
5. Preliminary Design of a 10-Mw(t) Pebble-Bed Reactor Experiment, ORNL CF-60-10-63, November 1, 1960.
6. E. S. Collins, P. K. Conn, and J. B. Trice, Fission-Product Monitoring Techniques in Gas-Cooled Reactors, Trans. Am. Nuclear Soc., 2(1): 209 (June 1959).
7. G. C. Robinson, Containment Vessel Cost and Buckling Considerations, ORNL CF-59-9-52, September 15, 1959.
8. A. M. Perry et al., A Study of Graphite-Moderated Th-U^{233} Breeder Systems, ORNL-2666, January 18, 1960.
9. Gas-Cooled Reactor Project Quarterly Progress Report for Period Ending September 30, 1959, ORNL-2835, November 25, 1959.
10. R. P. Shields et al., Irradiation Effects on BeO, ORNL-3164, July 1961.
11. R. S. Carlsmith, Power Density in Ceramic-Fuel-Element Gas-Cooled Reactors, ORNL CF-59-8-87, August 14, 1959.
12. R. S. Carlsmith, Nuclear Characteristics of BeO-Moderated Cores vs Graphite-Moderated Cores, ORNL CF-60-1-43, January 15, 1960.
13. R. S. Carlsmith, Protactinium Losses in a BeO-Moderated Reactor, ORNL CF-60-1-108, January 27, 1960.

14. R. S. Carlsmith, Pressure Vessel Exposure to Fast Neutrons, ORNL CF-60-1-75, January 21, 1960.

15. A. P. Fraas and M. N. Ozisik, Relative Capital Charges and Fuel Cycle Costs for All-Ceramic Gas-Cooled Reactors, unpublished data.

16. A. P. Fraas, Steam Generators for High-Temperature Gas-Cooled Reactors, ORNL-3208, to be published.

17. A. P. Fraas, Flow Stability in Heat Transfer Matrices Under Boiling Conditions, ORNL CF-59-11-1, November 1, 1959.

18. R. L. Johnson et al., Friction, Wear, and Surface Damage of Metals as Affected by Solid Surface Films, NACA Technical Report 1254 (1956).

19. A. P. Fraas et al., Design Study of a Pebble-Bed Reactor Power Plant, ORNL CF-60-12-5, May 11, 1961.

20. D. W. Lee and R. C. Spencer, Photomicrographic Studies of Fuel Sprays, NACA Technical Report 454 (1933).

21. R. A. Castleman, Jr., The Mechanism of Atomization Accompanying Solid Injection, NACA Technical Report 440 (1932).

Internal Distribution

1. L. B. Alexander
2. S. E. Beall
3. M. Bender
4. C. J. Borkowski
5. R. B. Briggs
6. R. S. Carlsmith
7. F. L. Carlson
8. W. R. Chambers
9. J. H. Coobs
10. W. B. Cottrell
11. J. A. Cox
12. F. L. Culler
13. J. L. Fowler
14. J. H. Frye
15. W. R. Gall
16. B. L. Greenstreet
17. W. O. Harms
18. H. W. Hoffman
19. A. Hollaender
20. A. S. Householder
21. W. H. Jordan
22. P. R. Kasten
23. C. P. Keim
24. M. T. Kelley
25. J. J. Keyes
26. M. E. Lackey
27. J. A. Lane
28. C. E. Larson (K-25)
29. R. S. Livingston
30. R. N. Lyon
31. H. G. MacPherson
32. R. E. MacPherson
33. W. D. Manly
34. J. W. Michel
35. K. Z. Morgan
36. M. N. Ozisik
37. A. M. Perry
38. C. A. Preskitt
39. G. C. Robinson, Jr.
40. M. W. Rosenthal
41. G. Samuels
42. H. W. Savage
43. A. W. Savolainen
44. E. D. Shipley
45. M. J. Skinner
46. A. H. Snell
47. R. D. Stulting
48. J. A. Swartout
49. D. B. Trauger
50. J. J. Tudor
51. A. M. Weinberg
52. G. D. Whitman

53-56. ORNL – Y-12 Technical Library
Document Reference Section

57-122. Laboratory Records Department

123. Laboratory Records Department
ORNL R.C.

124-126. Central Research Library

External Distribution

127-129. W. F. Banks, Allis-Chalmers Mfg. Co.
130-132. P. D. Bush, Kaiser Engineers
133. R. A. Charpie, UCC Research Administration, New York, N.Y.
134-135. David F. Cope, Reactor Division, AEC, ORO
136-137. R. W. Coyle, Vallecitos Atomic Laboratory
138. E. Creutz, General Atomic
139-141. R. B. Duffield, General Atomic
142. D. H. Fax, Westinghouse Atomic Power Division
143. M. Janes, National Carbon Research Laboratories, Cleveland, Ohio

144. T. Jarvis, Ford Instrument Co.
145. James R. Johnson, Minnesota Mining and Manufacturing Company, Saint Paul, Minn.
146. Richard Kirkpatrick, AEC, Washington
147. C. W. Kuhlman, United Nuclear Corp.
148-149. H. Lichtenburger, General Nuclear Engineering Corp.
150. J. P. McGee, Bureau of Mines, Appalachian Experiment Station
151. R. W. McNamee, Manager, UCC Research Administration, New York, N. Y.
152. S. G. Nordlinger, AEC, Washington
153. R. E. Pahler, High-Temperature Reactor Branch, Reactor Division, AEC, Washington
154. H. B. Rahner, Savannah River Operations Office
155. Corwin Rickard, General Atomic
156. M. T. Simnad, General Atomic
157. Nathanial Stetson, Savannah River Operations Office
158. Donald Stewart, AEC, Washington
159. Philip L. Walker, Pennsylvania State University
160. R. E. Watt, Los Alamos Scientific Laboratory
161-162. W. L. Webb, East Central Nuclear Group, Inc.
163. Division of Research and Development, AEC, ORO
164-764. Given distribution as shown in TID-4500 (17th ed.) under Reactor Technology category (75 copies – OTS)