MARTIN MARIETTA ENERGY SYSTEMS LIBRARIES
3 4456 0364488 5

ORNL-3227
UC-10 – Chemical Separations Processes
for Plutonium and Uranium
TID-4500 (17th ed.)

COMPARATIVE COST STUDY OF PROCESSING STAINLESS STEEL-JACKETED UO_2 FUEL: MECHANICAL SHEAR-LEACH VS SULFEX-CORE DISSOLUTION

J. B. Adams
A. M. Benis
C. D. Watson

CENTRAL RESEARCH LIBRARY
DOCUMENT COLLECTION
LIBRARY LOAN COPY
DO NOT TRANSFER TO ANOTHER PERSON
If you wish someone else to see this document, send in name with document and the library will arrange a loan.

OAK RIDGE NATIONAL LABORATORY
operated by
UNION CARBIDE CORPORATION
for the
U.S. ATOMIC ENERGY COMMISSION

Printed in USA. Price $1.50 cents. Available from the

Office of Technical Services
U. S. Department of Commerce
Washington 25, D. C.

LEGAL NOTICE

This report was prepared as an account of Government sponsored work. Neither the United States, nor the Commission, nor any person acting on behalf of the Commission:

A. Makes any warranty or representation, express or implied, with respect to the accuracy, completeness, or usefulness of the information contained in this report, or that the use of any information, apparatus, method, or process disclosed in this report may not infringe privately owned rights; or

B. Assumes any liabilities with respect to the use of, or for damages resulting from the use of any information, apparatus, method, or process disclosed in this report.

As used in the above, "person acting on behalf of the Commission" includes any employee or contractor of the Commission to the extent that such employee or contractor prepares, handles or distributes, or provides access to, any information pursuant to his employment or contract with the Commission.

ORNL-3227

Contract No. W-7405-eng-26
Chemical Technology Division

COMPARATIVE COST STUDY OF PROCESSING STAINLESS STEEL-JACKETED UO_2 FUEL: MECHANICAL SHEAR-LEACH VS SULFEX-CORE DISSOLUTION

J. B. Adams
A. M. Benis
C. D. Watson

DATE ISSUED

APR 6 1962

OAK RIDGE NATIONAL LABORATORY
Oak Ridge, Tennessee
operated by
UNION CARBIDE CORPORATION
for the
U. S. Atomic Energy Commission

MARTIN MARIETTA ENERGY SYSTEMS LIBRARIES

3 4456 0364488 5

ABSTRACT

The economics of mechanical shear-leach and Sulfex decladding-core dissolution head end treatments for processing typical tubular bundles of stainless steel-jacketed UO_2 nuclear fuels were compared. A 2.66 metric ton U/day head end portion of a plant was designed for each process and capital and operating costs were developed. For plants of this size and larger, mechanical shear-leach processing has the advantage of ~20% lower capital cost and 50% lower operating cost. Processing costs of stainless steel-jacketed UO_2 by the Sulfex and shear-leach methods, including amortization and waste disposal but excluding solvent extraction, were $15.78 and $2.71 per kilogram of uranium, respectively. Storage of stainless steel waste produced by the shear-leach method is less costly by a factor of 20 than for Sulfex.

CONTENTS

		Page
1.0	Introduction	4
2.0	Comparison of the Two Methods	5
3.0	Basis of Cost Comparison	8
4.0	Comparative Capital and Operating Costs	15
5.0	References	19
6.0	Appendix	23
6.1	Stoichiometry of Chemical Flowsheets	23
6.2	Criticality	25
6.3	Losses and Potential Cost	26
6.4	Schedule of Dissolver Operation for Sulfex Head End Process	27
6.5	Hydrogen Evolution in Sulfex Head End Process	28
6.6	Rare Gas Handling	28
6.7	Building Costs	29
6.8	Maintenance	29
6.9	Special Mechanical Equipment	29

1.0 INTRODUCTION

This report is an economic comparison of a mechanical head-end method, shear-leach, as developed at Oak Ridge National Laboratory,[1] with a more conventional proposed aqueous method, Sulfex, initially developed at Oak Ridge National Laboratory,[2,3] for processing stainless steel-jacketed UO_2 or uranium metal fuel. The comparison should help indicate the direction of further fuel processing development work, especially mechanical processing in which past development work has been much less extensive than in aqueous techniques. In the shear-leach process, cropped complete fuel assemblies or subassemblies are sheared into short lengths, exposing the UO_2 core from which the uranium is leached with boiling nitric acid. In the Sulfex process, the stainless steel jacket is dissolved in sulfuric acid, and discarded, and the exposed core is dissolved in nitric acid. In each case, the nitric acid solution would then be processed by known, proved methods.

The attainment of economic nuclear power in the U. S. depends partly on the development of cheap methods of recovering fissile and fertile materials from spent fuel. Extensive laboratory and development work on various methods, especially aqueous ones, has been done at ORNL, Hanford, Savannah River, and Idaho. Such work has been aimed mostly at providing an interim processing method for the large number of fuel assemblies that have resulted from attempts to produce economic nuclear power. Most such fuels consist of ceramic oxide cores of UO_2 or UO_2-ThO_2 jacketed in Zircaloy-2 or stainless steel tubing, with the tubes fixed into a spaced array in a bundle. In general, the cores are soluble in nitric acid, but the jackets are insoluble, and most proposed processes involve dissolving the jacket in one reagent and disposing of it as a large-volume intermediate-activity waste, followed by dissolution of the core in nitric acid. All aqueous dejacketing-core dissolution processes are batch processes.

The shear-leach process appears to offer the economic advantages of large-scale continuous operation with a potentially small volume of solid metal waste. It is versatile and may be suitable for stainless steel- or Zircaloy-2 jacketed ceramic oxide or liquid-metal-bonded fuels, and carbide core fuels. Although the equipment is expensive and probably would

operate below capacity in a small plant, if fuel development leads to more exotic refractory jacketing materials, mechanical processing may be essential.

The plant for each of the processes compared is a large, essentially single-purpose unit, although with some changes either could process several other common types of fuels. The comparison is based on reclaiming uranium and plutonium from a common reactor fuel type, tubular bundles of stainless steel-jacketed UO_2. With data from incomplete laboratory- and engineering-scale development work, a process flowsheet and plant design were prepared for each process for a plant with a capacity of 2.66 metric tons of uranium per operating day. Capital and operating costs were estimated for both methods, limited to the parts of the process that are different. This procedure was selected to prevent masking of cost differences by the large costs for the major part of the plant, i.e., the receiving facilities, canal storage, off-gas handling, feed-adjustment, solvent-extraction, solvent-cleanup, acid-recovery, high-activity waste disposal from the solvent extraction step, building ventilation, utilities, etc., which are essentially identical for the two processes.

Acknowledgment. The authors gratefully acknowledge the assistance of W. G. Stockdale for reviewing and assisting in the cost estimates, C. H. Odom, W. F. Schaffer, Jr., A. E. Spaller for head-end design assistance, H. E. Goeller and J. W. Ullmann for review work.

2.0 COMPARISON OF THE TWO METHODS

An economic comparison of the capital and operating costs for the nonidentical parts of a mechanical shear-leach with those of a Sulfex decladding-core dissolution head-end plant for processing stainless steel-clad UO_2 fuel assemblies at a rate of 800 metric tons U/year shows that both capital and operating costs are lower for the mechanical process:

	Sulfex	Mechanical Shear-Leach
Capital cost, $	5,373,305	4,096,153
Operating costs, $/yr		
without amortization	2,247,452	1,074,161
6.7 yr amortization	3,019,981	1,695,103
Processing cost, $/kg U (including amortization)	3.78	2.12

The head-end plant considered includes process equipment, piping, construction, amortization, etc. but no items common and/or equal in the two designs, i.e. process canyon, receiving and storage areas, preparation facilities, dissolver off-gas handling, rare gas system (if used), or solvent extraction.

Based on 20 years' waste tank filling time, the economic advantage of the mechanical shear-leach head-end process is 20 to 1:

	Sulfex	Mechanical Shear-Leach
Initial investment cost, $	-	253,400
Operating cost, $/yr	9,560,000	473,010
Perpetual operating cost, $/yr	-	90,000
Cost of waste storage, $/kg U processed	12.00	0.59
$/gal of waste stored	2.00[4]	4.98
Waste storage volume required, gal/yr	4.7 million	95 thousand

Waste disposal costs for the high-activity waste from solvent extraction processing of the core are identical for the two plants.

The capital cost for a complete Sulfex plant of this size is guessed[5] to be of the order of $50 million, so that the difference in capital ($1.13 million) between the two head-end processes corresponds to about 2% of the total cost for a complete fuel processing plant.

The key difference between these large-throughput plants is the waste type, volume, and handling facilities. In the mechanical dejacketing waste, most of the hazardous radioactive material is fixed in the metal, greatly decreasing the possibility of escape of radioactive nuclides to the biological environment. The tankage volume required, the cost of the storage container, and the hazards due to corrosion and leakage over a long storage period are lower than for Sulfex waste. Also, the preparation and handling of Sulfex waste slurries require a large amount of in-cell floor space, tankage, pumps, and transfer lines as well as neutralization reagents.

All these advantages should accrue to applicable mechanical processes in general compared to aqueous processes operating on identical fuel types.

There are other characteristic differences. Sulfex, like other aqueous processing systems where jacket and core are dissolved in separate reagents, is essentially a batch process and is limited to this by fuel element geometry, criticality, and the requirement that hydrogen and nitrogen oxides be kept separated. High-throughput plants must be made up of multiple units operating in parallel to obtain the desired production rate. Mechanical shear-leach processing is essentially continuous and can expose the fuel cores of many types of fuel, independently of the jacketing material, allowing recovery of fissionable material by methods that use stainless steel equipment. Scaleup of Sulfex does not decrease costs but mechanical processing will be most economical in operation at full capacity of the largest feasible shear unit or multiples thereof. The cost of units for shearing fuel assemblies is a rather inflexible function of their capacity, which for a particular type of fuel assembly is controlled mainly by the speed of loading fuel bundles and not by the shearing rate, which is quite rapid (4-6 strokes per minute). If, for example, a shear is selected which will shear only subassemblies, thereby halving the tonnage capacity, the cost is only 30% less than for a large shear.

Criticality hazards present a much greater problem in the continuous conveying and leaching equipment of the shear-leach method than in the Sulfex batch dissolvers. In continuous equipment, the possibility of concentration transients in the liquid phase due to changes in the rate of leaching of sheared and crushed fuel causes much greater concern about the probability of a nuclear excursion, and the impossibility of immediate checks on concentration increases the number of unknown factors. The unconventional shape of the equipment items also adds to the problem. A greater safety factor may therefore be needed in design to attain the same degree of reliability as the simpler Sulfex cylindrical-tube batch dissolver system.

3.0 BASIS OF COST COMPARISON

The cost comparison between Sulfex dejacketing-core dissolution and mechanical shear-leach head-end processes is based on assumptions outlined in the following paragraphs and in the Appendix. The fuel considered is stainless steel-jacketed uranium oxide fuel of low enrichment ($\leq$ 5%) similar to the Nuclear Merchant Ship Savannah (NMSS) fuel, large amounts of which will probably need to be processed by about 1975. The assumed throughput is that of one mechanical shear of a shear-leach plant and of a Sulfex plant of the same capacity. This assumption maximizes the production rate and minimizes costs of the mechanical processing plant without biasing the estimate of the aqueous plant which must have multiple batch dissolvers for a high throughput. The studies are confined to the head ends and waste systems since all other parts of the plant, such as solvent extraction, are essentially identical. Thus, the bulk of the processing equipment, buildings, etc., need not be designed, specified, and costed, and the economics of the comparison are not masked by the large capital and operating costs for the major part of the plant.

Both plants are designed for remote maintenance through the first cycle and direct maintenance of other parts. A complete duplicate line of shear and leachers are provided to insure continuous production despite a major equipment failure. Viewing windows are believed desirable and are used in both head-end processes. No attempt was made to optimize equipment design on either process. For both processes material balance flowsheets, an equipment flowsheet, plant head end layout, and evaluation, were prepared, heat loads, fluid flow rates, and batch sizes were calculated where necessary, and process equipment was sized. Capital and operating cost estimates were based on the estimated cost of major equipment by well known methods[6-9] but including the best judgment of the authors on a number of points where little information is known or is a subject of controversy.

In comparison of waste costs, capital and operating costs for disposal of the waste from the shear-leach head end were estimated, but estimates made by others[4,12] were used for Sulfex waste storage costs.

Sulfex (Fig. 1A). A material balance flowsheet (Fig. A1), equipment identification flowsheet (Fig. A2), equipment layout (Fig. A3), and a sectional elevation (Fig. A4) were prepared for the Sulfex head-end process. Factors involved in the plant design are discussed in the Appendix. The design throughput is 12 fuel assemblies per day for 300 operating days per year. At 222 kg of uranium per assembly, the capacity must be 2.66 metric tons/day, 799.2 metric tons/year. This production rate requires six dissolvers operating in two banks of three on a 12-hr cycle for each fuel assembly. Tank sizes, pump flow rates, and batch makeup volumes correspond.

Spent reactor fuel is brought into the plant and held in the storage canal for at least 120 days', preferably 180 days', decay. Before processing, an underwater saw removes all inert metal parts that can be safely detached. The cropped assembly is loaded into a sacrificial basket of carbon steel to facilitate charging to a dissolver by an overhead crane. Details of metal removal and loading procedure depend on the element design, but the addition of mild steel as a crane basket, steel wool, or chain aids in initiating dissolution promptly by depassivation of the stainless steel. Assemblies are transferred to the main canyon and charged to the dissolvers as required.

The stainless steel jacket is removed by dissolution in boiling 4 M sulfuric acid, fed continuously over a 5-hr period, the overflow passing through a centrifuge to remove particles of UO_2 and stainless steel. The clarified overflow is collected in a large tank with a geometrically safe bottom section in case UO_2 inadvertently reaches this point. The dissolver is cooled and the contents are jetted through the centrifuge into the safe-bottomed hold tank. The dissolver containing the UO_2 core is thoroughly washed with water, which is centrifuged and then stored in wash hold tanks for use in making up the next batch of sulfuric acid dissolvent.

Hydrogen gas produced during dejacketing is burned with oxygen. The product, a mixture of excess oxygen and water vapor, is remixed in the main off-gas system. The dissolver system is purged with nitrogen between the sulfuric and nitric acid cycles to prevent formation of

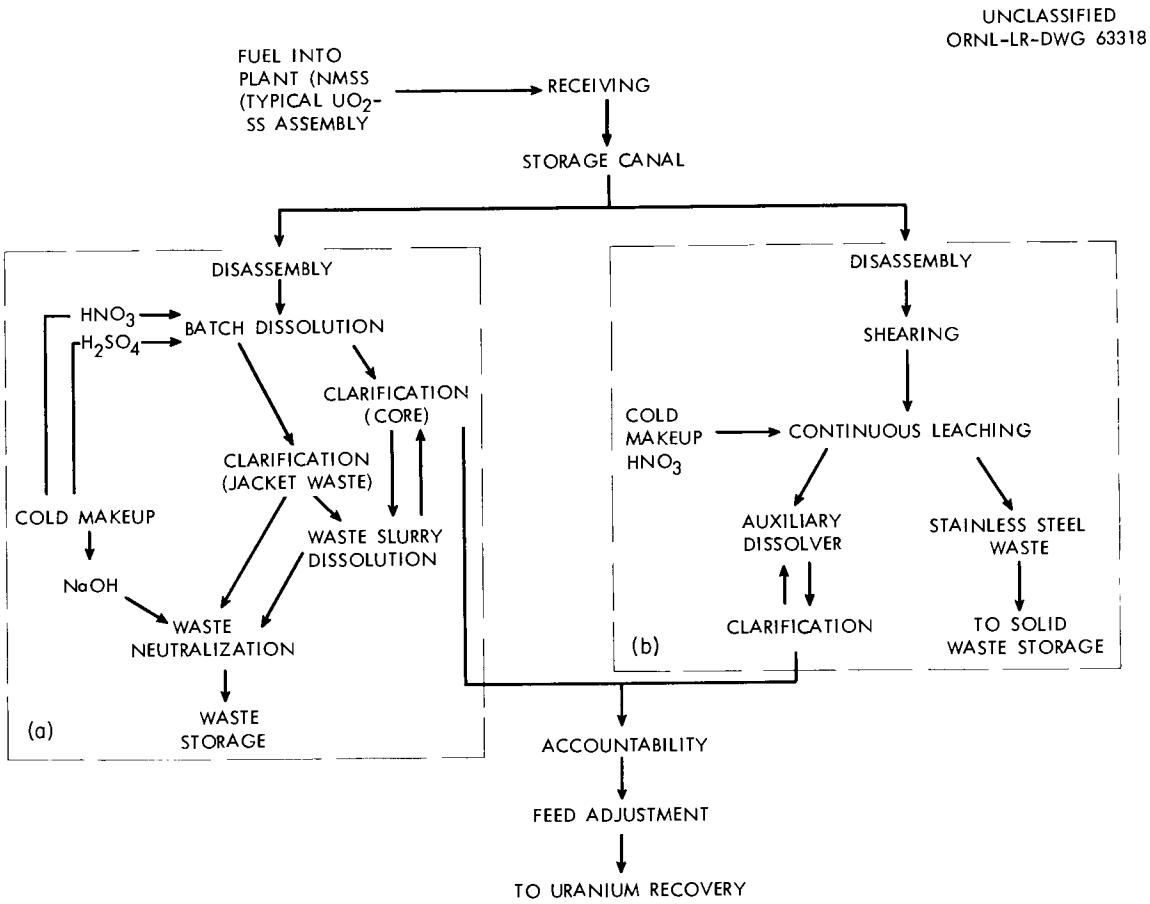

Fig. 1. Outline of (a) sulfex-core dissolution and (b) mechanical shear-leach head end processes. Only process steps within dashed lines are considered in cost comparison.

explosive mixtures of hydrogen with air, oxygen, HNO_3 vapor, or nitrogen oxides.

For core dissolution a measured batch of cold water is placed in the dissolver to moderate the initial reaction, and then boiling 10 M HNO_3 is fed to dissolve the UO_2. A total of 4 hr is allowed for total dissolution although it may be essentially complete within 2 hr. Uranium-bearing solution is clarified by centrifugation and surged in geometrically safe-bottomed product tanks. The dissolver system is carefully washed to prevent passivation and soluble losses in the next decladding cycle, and the washings are added to the main product. Waste sulfuric acid is neutralized with 50% caustic solution and the resulting slurry pumped to the waste disposal tanks. The sludge in each centrifuge is thoroughly washed and jetted to the waste slurry dissolver, where extended treatment with nitric acid dissolves all fissionable material. Solids trapped in safe-bottomed tanks are jetted back through the centrifuge and through the waste slurry dissolver. Sludge is discarded along with the slurry of neutralized sulfuric acid when analysis shows it to be barren of values.

Shear-Leach (Fig. 1B). A material balance flowsheet (Fig. A5), equipment identification flowsheet (Fig. A6), equipment layout (Fig. A7), and sectional elevations (Figs. A8-9) were prepared. A cutaway view of a typical shear-leach complex of lower capacity than the size selected in this study is shown in Fig. 2. Factors involved in the plant design are presented in the Appendix.

The plant size and design throughput determine the number and length of inclined drum rotary units to maintain production while providing the required length of holdup time (6 hr). One fuel assembly is sheared and stored every 2 hr to provide leacher feed for the next 2 hr; a total of 12 sheared assemblies per day for 300 operating days per year is required. Tank sizes, pump flow rates, and batch makeup volumes correspond. Spent reactor fuel is brought into the plant for at least 120 days', preferably 180 days', decay. Before processing, an underwater saw is used to remove all inert metal parts that can be safely detached. The assembly is loaded into a shear envelope, a feed chamber of the shear proper. Loaded envelopes are conveyed underwater to the main canyon and fitted to the shear

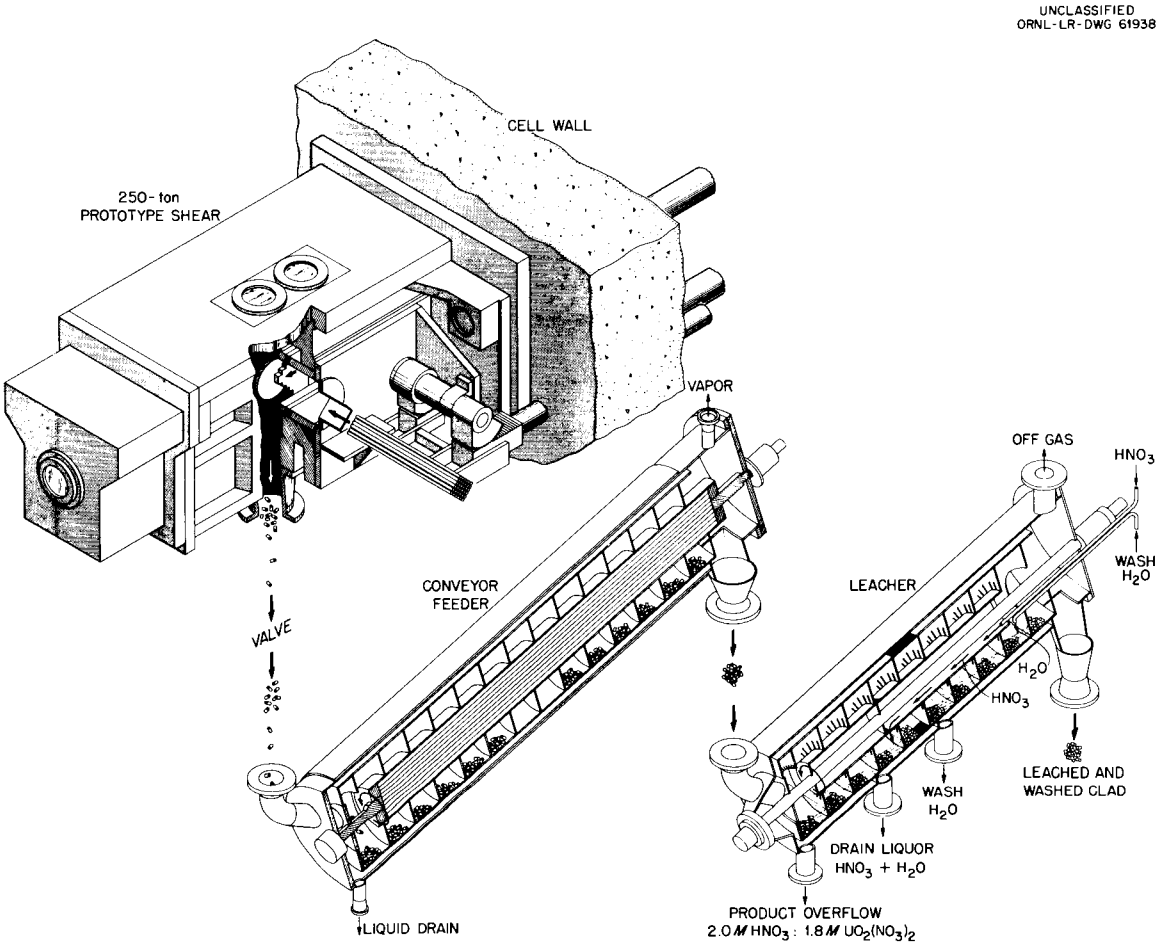

Fig. 2. Cutaway view of a typical shear-leach complex with a single leacher-washer unit.

housing (Figs. A8-9). Shearing proceeds at about 6 cuts per minute as the fuel assembly is progressively advanced into the shear by a hydraulically driven ram. Sheared lengths of about 1 in. are dropped into an inclined drum rotary conveyor-feeder. The entire assembly is sheared into consecutive compartments of the conveyor in 20-30 min. An interlock with the shear prevents more than a limited volume of sheared pieces from being fed to any one of the 10 flights used in the 12-flight conveyor. The envelope and shear housing are washed down by an internal spray system. The conveyor-feeder is one of three inclined drum rotary processing units, each containing 12 compartments (Appendix), providing for semi-continuous processing of the sheared feed. Each of the 12 compartments formed by flush welding of a continuous spiral to the inside of a cylinder holds chopped solids. The second, a leacher, and the third, a leacher-washer, rotate at 4 rph to provide a total holdup time in each unit of 3 hr. Four batches of sheared pieces per hour are fed to consecutive flights of the leacher (unit 2), which in turn delivers four flights of leached jackets to the leacher-washer (unit 3). In turn, the leacher-washer dumps four flights per hour of leached and washed jackets to a waste receiver. In the last four flights (1 hr holdup) of the leacher-washer, wash water flows countercurrently to the batches of leached jackets and is drained from the unit. In the first eight flights (2 hr holdup) of the leacher-washer, hot 10 M HNO_3 flows countercurrently to the batches of chopped fuel draining from the unit as product. In all 12 flights (3 hr holdup) of the leacher, hot dilute nitric acid made by mixing the condensate return with strong acid and wash water from the leacher-washer flows countercurrently to batches of sheared fuel containing UO_2 cores. Both the leacher and leacher-washer are steam-jacketed for heating, and both are connected to the main off-gas condenser. Most of the leaching of the crushed UO_2 from its tubular jacket should occur in the first four stages of the leacher. The remaining eight stages in the leacher, the eight strong acid leaching stages, and four washing stages in the leacher-washer provide a large safety factor against loss of fissionable and fertile values to the waste. Provisions for re-leaching and inspection of the waste jackets were not included in the plant. The main product stream, overflowing from the leacher, is fed to an auxiliary dissolver system or digester via a settler where UO_2 and stainless steel

fines may collect. The overflowing product stream is clarified by a centrifuge. Periodically, any undissolved solids in the auxiliary dissolver are jetted to the centrifuge. These solids are washed and fed to the rotary leacher and thence to the auxiliary dissolver for re-leaching or to waste disposal. Most of the solids are expected to be stainless steel fines, which can be recharged to the rotary leacher and eventually discharged to a solids waste receiver.

Waste. The intermediate-activity Sulfex waste is produced by neutralizing the sulfuric acid solution containing dissolved stainless steel with 50% caustic (NaOH). A solution of sodium sulfate is formed in which precipitated hydroxides or basic sulfates of iron, chromium, and nickel are suspended and possibly hydrated sodium sulfate crystals if the solution is saturated at the storage temperature. Neutralized stainless steel waste slurry can be produced at 20 g SS/liter, which was selected for this cost study. A 20 g SS/liter waste slurry results from neutralizing the dejacketing solution containing 30 g SS/liter with caustic. Slurries of 50 g SS/liter up to a maximum of 80 g SS/liter can be made, although this should result in a thick gel undesired in storage tanks. The stainless steel loading and excess acid have considerable effect on the consistency of the slurry produced by neutralization with caustic. After being checked for the absence of fissionable materials before neutralization, the slurry is pumped to tanks at a waste farm for perpetual-care storage. The relative volume of waste is 10-100 times as much from Sulfex as from mechanical shear-leach. With the choice of flowsheets used in this study, a volume ratio of about 50 resulted. The amount of waste per kg of uranium processed also depends on the fuel assembly construction and how much excess metal can be removed before processing.

Stainless steel waste from shear-leach processing is loosely packed batches of chopped tubes leached free of UO_2 and thoroughly washed with water. Chopped, leached, and washed jackets (1-in. lengths) have a bulk density of 1 kg/liter (86-88% voids), which could be increased to at least 2 kg/liter by flattening or crushing. They are expected to be quite radioactive from activation of Fe, Ni, Cr, Mn, and Co in the metal and from small traces of fission products that diffuse into the metal. Permanent

disposal by storage in underground steel tanks with perpetual care-taking appears practical. About three 10- by 60-ft cylindrical tanks per year would contain the waste metal at the design production rates. The plant would produce 3.6×10^5 kg of waste per year, requiring at least 95,000 gal of waste storage volume per year.

Washed jacketing (Fig. A9) is collected twice a shift from the washer in 55-gal stainless steel containers and carried by crane to a storage area of 24 drums capacity. Each drum passes through a decontamination room in a loading blister of the main plant, and the contents are unloaded through the floor into a top-loading lead-shielded carrier of ~8 ft^3 volume. On the outside, lead-shielded carriers are lifted into position for loading under the floor of the loading blister by an elevator. When loaded and lowered to road level, these are picked up by a straddle carrier and transported to the waste field. The carriers and waste tankage were designed (Fig. A10), but details of the loading blister were not. Cost estimates for the waste disposal plant are based on 20 years' operation, during which three 10-ft-dia by 60-ft-high tanks would be filled to 0.9 of their total volume each year. Meanwhile, an escrow fund is built up sufficient to provide perpetual operating costs after 20 years. New tanks are installed every year and charged as an operating cost, and all other facilities, including land, are amortized over the first 20 years. No profit is included. Because the radioactivity is well fixed and in a noncorrosive form, no tank replacement is required. After sufficient length of time part of the escrow fund and salvage value of equipment (lead, etc.) could be used to pay for filling the tanks with concrete. A hazard insurance premium of $100,000 per year is included during the first 20 years.

4.0 COMPARATIVE CAPITAL AND OPERATING COSTS

The major process equipment items of the Sulfex (Table A1) and shear-leach (Table A2) head end processes were cost-estimated from a variety of sources[6-11] and adjusted to an Engineering News Record Index (1913 = 100) of 813. Annual costs of materials and utilities (Table A3) and operating labor (Table A4) were estimated. A comparative capital cost estimate (Table 1) and a comparative operating cost (Table 2) were prepared. A number of guesses and approximations were involved in both. The capital

Table 1. Comparative Capital Costs of Equipment

Equipment	Sulfex		Shear-Leach	
	Delivered (P)	Installed	Delivered (P)	Installed
Non-Radioactive Equipment	193,969	252,160	45,250	58,825
Radioactive Equipment	839,989	1,091,986	766,222	996,089
	1,033,958	1,344,146	811,472	1,054,914
Spare Equipment (not installed)		223,110		103,600
Piping (2.5 x P)		2,584,895		2,028,680
Instrumentation (1.0 x P)		1,033,958		811,472
Electrical (0.1 x P)		103,396		81,147
		5,289,505		4,079,813
Working capital 30 days' supply of raw materials		83,800		16,340
Grand Totals*		5,373,305		4,096,153

* Amortization of capital investment is based on grand totals less the working capital cost of a 30 day inventory of process chemicals.

Table 2. Comparative Annual Operating Costs

Item	Sulfex		Shear-Leach	
	$/kg U	$/year	$/kg U	$/year
Raw materials	1.256	1,004,048	0.245	195,978
Operating labor (A)	0.436	349,000	0.280	224,000
Labor supervision (B) (20% of A)	0.087	69,800	0.056	44,800
Maintenance (10% of fixed capital)	0.634	506,640	0.497	397,621
Operating supplies	0.063	50,664	0.050	39,762
Utilities	0.012	9,200	0.008	6,300
	2.488	1,989,352	1.136	908,461
Payroll overhead (20% of A + B)	0.104	83,600	0.067	53,760
Plant overhead (50% of A)	0.218	174,500	0.140	112,000
	0.322	258,100	0.207	165,760
Amortization (15% per year)	0.966	772,529	0.776	620,942
Grand Totals	3.78	3,019,981	2.12	1,695,163

cost for the Sulfex head end plant and equipment without the building was $5,373,305 and the annual operating cost was $2,247,452 without amortization and $3,019,981 with amortization of fixed capital over 6-2/3 years. Profit was not included in the calculation. Per unit of throughput, the operating costs were $1.27 per pound ($2.81 per kilogram) of uranium without amortization and $1.71 per pound ($3.78 per kilogram) of uranium with amortization over 6-2/3 years. The total cost of head end processing including amortization and waste was $15.78 per kilogram of uranium.

The capital cost of the shear-leach head end plant and equipment without the building was $4,096,153 and annual operating cost $1,074,161 without amortization and $1,695,163 with amortization of fixed capital over 6-2/3 years. Profit was not included in the calculation. Per unit of throughput, the operating costs were $0.61 per pound ($1.35 per kilogram) of uranium without amortization and $0.96 per pound ($2.12 per kilogram) with amortization of 6-2/3 years. The total cost of head end processing including amortization and waste was $2.71 per kilogram of uranium.

Waste. The chief reasons for the large difference in waste cost between the two processes are the much larger volume of Sulfex waste to be stored and the assumption that tanks for storage of solid metal need not be replaced while those that store liquid waste will require replacement approximately every 50 years.

The cost of handling Sulfex waste in 5,000,000-gal concrete-lined steel tanks was developed from a study by Stockdale, Arnold, and Blomeke[4] on the general problem of tank disposal of aqueous wastes. They considered that one tank would always be available as a standby in case of corrosion and that, because of corrosion, each tank would be replaced at 50-year intervals in perpetuity. A sinking fund, treated as an operating cost, is set up during the operating life of the associated processing plant to provide a perpetual annuity, the proceeds of which would be sufficient to provide the required operating funds. The minimum cost as an operating charge for this operation was estimated as ~$2 per gallon for very large waste storage facilities and somewhat higher ($3-$4 per gallon) for smaller scale facilities. This report used an estimated cost of $2 per gallon. At the design rate of 4.78 million gal/year (~1 tank per year required), this amounts to an annual operating charge of $9.56 million per year.

It is apparent that considerable reduction of processing costs would result from an increase in stainless steel concentration in the waste which was selected at 30 g stainless steel/liter prior to neutralization. Concentration by evaporation of acidic or neutralized waste is quite difficult, requiring more cell space and recycle of water. A change in dissolvent composition to 5 or 6 M H_2SO_4 would change the time cycle and require more dissolver units and cell space and increase the problems of corrosion and sludge and possibly increase soluble uranium losses.

Estimates of the shear-leach capital cost (Table 3), operating cost during the first 20 years (Table 4), and operating cost after 20 years (Table 5) were prepared for comparison with the cost of aqueous waste storage required for the Sulfex head-end process. At a processing rate of 2.664 metric tons of uranium per operating day (300-day year), including perpetual care, the waste disposal cost is $0.27 per pound of uranium, $0.60 per pound of stainless steel, or $4.98 per gallon of stainless steel waste.

The total annual operating cost was estimated as $473,010 per year, including an annual payment into an escrow fund to ensure perpetual operating costs after a 20-year filling period. Waste costs could be lower since a considerably larger volume of waste could be handled in the same facilities with major added costs only for additional tanks. Sufficient land is available, and caretaking costs would increase only slightly with an increased number of tanks. Crushing of stainless steel jackets, already quite dense compared to aqueous wastes but only at 15% solids by volume, to a higher bulk density would result in further savings.

Table 3. Shear-Leach Waste Processing Capital Cost

Item	Cost
Land, 100 acres at $400/acre	$ 40,000
Site development, grading, draining, layout, $100/acre	10,000
Fence, 5280 ft at $5.20/ft	27,500
Road to waste site, 1/2 mile at $5/ft	13,200
Building at waste site, 450 ft^2 at $10/$ft^2$	4,500
Loading port (blister) at main processing building, 1 decontamination cell with small viewing window, remote crane (1 ton), 2 discharge hoppers, valves, chutes, carrier elevators	120,000
Lead-shielded carriers (2), 8 ft^3 SS liner, 6 in. ball valve, 5 in. lead (5 yr life)	10,600
Straddle carrier (truck)(2), 10 ton (10 yr life)	24,000
Waste cans inside plant (24)(1 yr life)	3,600
Total	$253,400

Table 4. Shear-Leach Waste Annual Operating Cost During 20 Year Filling Life

Item	Cost
3 storage tanks, carbon steel, 10 ft dia x 60 ft long, buried 5 ft deep, each complete with 74 ft of concrete road at ground level; twelve 8-in. loading pipes, 12 sliding lead doors, 12 SS cover plates, vent filter, lights, instrumentation, cathodic protection, completely installed	$ 98,400
24 waste cans inside plant	3,600
Operating labor (A), 3 men/shift x 4 = 12 employees, 12 x $3/hr x 2080 hr/yr	74,900
Supervision (B)(10% of A)	7,490
Maintenance (C)	15,845
Plant supplies (10% of C)	1,584
Utilities	3,125
Payroll overhead (22% of A + B)	16,478
Plant overhead (63% of A)	47,450
Amortization (average over 20 yr)	15,300
Property tax (1% of fixed capital including an average of 30 tanks in the ground)	12,338
Hazard insurance	100,000
Annual payment to produce escrow fund of $2,250,000 after 20 years at 4%, in turn yielding $90,000/yr in perpetuity for caretaking costs	76,500
Total	$473,010

Table 5. Shear-Leach Annual Operating Costs After 20 Years of Caretaking

Item	Cost
Operating labor (A), 1 man/shift x 4 = 4 employees, 4 x $3/hr x 2080 hr/yr	$ 25,000
Supervision (B)(10% of A)	2,500
Maintenance (C)	4,260
Plant supplies (10% of C)	426
Utilities	2,000
Payroll overhead (20% of A + B)	5,500
Plant overhead (50% of A)	12,500
Property tax	20,600
Hazard insurance	10,000
Total	$ 82,786

plus ~9% contingency = $90,000/yr

5.0 REFERENCES

1. "Chemical Processing of Irradiated Fuels from Power, Test and Research Reactors," Proc. AEC Symposium, Richland, Wash., Oct. 20-21, 1959, TID-7583.

2. B. C. Finney and B. A. Hannaford, "Sulfex Process: Engineering Scale Semicontinuous Decladding of Unirradiated Stainless Steel Clad UO_2 and UO_2-ThO_2," ORNL-3072 (March 21, 1961).

3. L. M. Ferris and A. H. Kibbey, "Laboratory Development of the Sulfex Process for the Dissolution of Consolidated Edison Power Reactor Fuel," ORNL-2174 (Oct. 16, 1959).

4. W. G. Stockdale, E. D. Arnold, and J. O. Blomeke, "The Economics of Permanent Disposal of Power Reactor Wastes in Tanks," ORNL-2873 (in press).

5. W. G. Stockdale, ORNL, conversation Nov. 9, 1961.

6. R. S. Aries and R. D. Newton, "Chemical Engineering Cost Estimation," McGraw-Hill Book Co., Inc., New York (1955).

7. M. S. Peters, "Plant Design and Economics for Chemical Engineers," McGraw-Hill Book Co., Inc., New York (1958).

8. O. T. Zimmerman and I. Lavine, "Chemical Engineering Costs," Industrial Research Service, Dover, New Hampshire (1950).

9. F. C. Vilbrandt and C. E. Dryden, "Chemical Engineering Plant Design," McGraw-Hill Book Co., Inc., New York (1959).

10. C. H. Chilton, editor, "Cost Engineering in the Process Industries," McGraw-Hill Book Co., Inc. New York (1960).

11. Gibson Morris (ORNL Engineering Dept.), letter to B. F. Bottenfield (ORNL Chemical Technology Division), "Power Reactor Fuel Reprocessing - Darex and Sulfex Processes vs. Darex-Sulfex Process," July 8, 1959.

12. "Chemical Technology Division Annual Progress Report for Period Ending August 21, 1960," ORNL-2993, p. 96.

13. B. C. Finney, unclassified Notebook No. A-1591, July 15, 1960.

14. A. R. Irvine, J. M. Holmes, A. C. Schafer, and J. P. Nichols, "A Review of Factors Bearing on the Nuclear Safety of Equipment for the PRFR Head End Facility," ORNL CF 60-1-102 (Jan. 13, 1960).

15. J. P. Nichols, "Proposed Methods for Maintaining Nuclear Safety in the Darex-Sulfex Head-End Process," ORNL CF 59-10-40 (Oct. 15, 1959).

16. AMF Atomics "Mechanical Disassembly of Spent Power Reactor Fuels Feasibility Report," for period Feb. 18 to Sept. 18, 1957, AMF-GR-24-57, p. 94.

6.0 APPENDIX

6.1 Stoichiometry of Chemical Flowsheets

The material balance flowsheets were based on the considerations that:

1. UO_2 dissolves in nitric acid by

$$UO_2 + 4HNO_3 \rightarrow UO_2(NO_3)_2 + 2NO_2 + 2H_2O$$

$$UO_2 + 8/3HNO_3 \rightarrow UO_2(NO_3)_2 + 2/3NO + 4/3H_2O$$

These equations present an over-similified picture, since UO_2 dissolves by a variety of mechanisms depending on the acid concentration and producing at least one other gaseous product, N_2O, and probably others. However, their use allows an estimate of the off-gas volume and heat release associated with the process.

2. Oxidation and recovery of nitrogen oxides takes place by

$$6NO + 3O_2 \rightarrow 6NO_2$$

$$6NO_2 \rightleftharpoons 3N_2O_4$$

$$3N_2O_4 + 3H_2O \rightarrow 3HNO_3 + 3HNO_2$$

$$3HNO_2 \rightarrow HNO_3 + 2NO + H_2O$$

The continued production of NO by this process prevents complete recovery except with a more extensive absorption system and with the use of oxygen rather than air for oxidation. The overall recovery of nitrogen oxides in the condenser system was taken as 66.7%.

3. Dissolution of stainless steel is represented by the general equation

$$SS + H_2SO_4 \rightarrow (SS)SO_4 + H_2\uparrow$$

The molecular weight of stainless steel was taken as 55; 1.1 mole of hydrogen is produced per mole of stainless steel as measured experimentally.[2] The amount of 50% caustic required for neutralization was estimated from the excess added over that required to react with the stainless steel dissolved.

The Sulfex chemical flowsheet was based on results of development work at ORNL.[2,3] It was estimated that 5 hr in boiling 4 M H_2SO_4 would

dissolve all but the thickest stainless steel parts. There is adequate depth in the dissolver to carry a heel of stainless steel fragments, and a heel cleanout run would be scheduled periodically. The dissolver is operated so-called "semi-continuously,"[2] by adding fuel elements in batches and feeding boiling 4 M H_2SO_4 acid continuously during the 5-hr decladding and allowing it to overflow. This is the only feasible method of contacting a large volume of acid with a fuel element in the restricted geometry needed for criticality control. The use of 4 M acid rather than 5 or 6 M results in less corrosion, at equimolar flow rates dissolution is faster, and the amount of excess acid is less (at equal fraction dissolved).* A fluffy black colloidal solid formed with acid strengths > 4 M is difficult to remove completely even in a centrifuge but also has a tendency to build up and clog transfer lines and other points in equipment where turbulence is low. The use of the fastest acting dissolvent also decreases the number of dissolvers required to process the desired number of fuel assemblies per day.

The nitric acid shear-leach flowsheet was selected to produce a product stream for uranium recovery identical with that from nitric acid core dissolution of UO_2 in the Sulfex head end. Leaching of crushed UO_2 from 1-in. sheared lengths of stainless steel tubing is more rapid than dissolution of nonjacketed whole pellets, and the countercurrent action of the inclined drum rotary leachers is efficient in maintaining a high dissolution rate.

Dissolution of UO_2 proceeds quite rapidly in boiling nitric acid, with most of the UO_2 dissolving during the first 2 hr, but up to 4 hr allowed to ensure completion. A possibly violent initial reaction between HNO_3 and UO_2 fines is tempered by covering the UO_2 in the leacher with cold water before feeding the boiling nitric acid.

---

* Since the loading is lower due to the higher volume rate of flow required to produce equimolar flow rates with 4 M acid.

6.2 Criticality

Criticality is a major problem in design of large-scale processing plants for spent power reactor fuels.[14,15] The stainless steel-clad UO_2 civilian power reactor fuels are of low enrichment (1.5 - 5%), but as processing plant capacity is increased and volumes are increased, vessel size increases and absolute criticality control can no longer be effected entirely by geometry and batch size. A combination of batch size, concentration control, vessel geometry, soluble and fixed poisons with fixed moderator, and other administrative procedures is necessary. The particular combination of features necessary and desirable depends to a high degree on the enrichment of the fuel handled. The presence of heterogeneous mixtures of UO_2 pellets and of fines in uranyl nitrate solutions complicates the problem.

The designs used in the present study are believed to be at least borderline safe by present knowledge under the restrictions and limitations considered but have not been checked in detail. It is considered impractical to design large-capacity plants based on geometry control alone, and future plants will probably use every possible means of criticality control so as to reduce processing costs while maintaining safe high-capacity operation.

In the Sulfex head end dissolvers, criticality control is by batch size, geometry, and soluble poisons. Considering the NMSS element as a single unit, a 9- to 10-in. square or 12- to 13-in.-dia round pipe would suffice to receive the element physically. In two halves, one stacked on the other, only slightly smaller dimensions are allowable. A 9-in. square is considered safe with batch control and soluble poisons. Extension to larger dissolvers may be possible with further tests on full-sized units. In any case, as an additional safety factor, boric acid is used as a soluble poison in the sulfuric acid stream and cadmium nitrate in the nitric acid stream, both at limits well removed from possible saturation. The centrifuges are safe by geometry. The waste hold tanks and wash water hold tanks have safe-geometry bottoms for collection of any UO_2 fines that escape the settler and centrifuge due to upsets in operation.

In the mechanical head end, the shear is geometrically safe due to careful design of the unit. The inclined drum rotary conveyor feeder incorporates a number of features for criticality control. It usually operates dry, but under certain circumstances could be flooded with water. Carrying 252 kg of UO_2 (5% enriched) divided into eight compartments (1.58 kg of U^{235} in each), the unit is metal, covered outside with stainless steel-sheathed cadmium; the interior of the 8-in. central pipe is filled with polyethylene, which is clad in polyethylene-sheathed cadmium as a moderator. The shape of the UO_2 as carried in the feeder approximates a truncated cylinder with stainless steel spacers every 6 in. In addition, the unit is batch controlled to contain no more than one chopped assembly at a time, i.e., it is completely emptied before being loaded with the next assembly. For smaller, lower enrichment elements other than the NMSS type, the severity of the problem is greatly reduced since the total weight of U-235 in a batch decreases rapidly with a decrease in assembly size and enrichment of uranium. The inclined-drum rotary leacher unit is controlled by the holdup of UO_2, being limited to the first two or three flights because of rapid dissolution, the size and shape of the unit, addition of limited batches from the feeder, and the additional acid of soluble cadmium as a poison in the dissolvent. This places a special emphasis on positive control of dissolvent composition and flow rate. Other equipment in the system (auxiliary dissolver and centrifuge) is known-safe by geometry.

6.3 Losses and Potential Cost

Loss of fissionable values in fuel processing could become a serious cost factor. For the purpose of this study, 100% recovery was assumed and no charge made for losses. The head end systems were designed in a manner believed to provide a high probability that losses would be slight. The cost of a processing loss is a function of the enrichment. A loss of significant cost with 5% enriched material may become insignificant with 1.5% material. Therefore statements of loss limits without specification of enrichment do not clearly define the economic picture.

There are factors in both head end processes that cause losses, but the relative magnitudes could not be estimated accurately for lack of information. During sulfuric acid decladding, the UO_2 core is exposed

for some length of time and a small soluble loss may occur. A small amount in a large volume of waste does not justify recovery. At some value of loss, however, recovery equipment would be warranted. The soluble loss is probably a function of time of contact of UO_2 with the sulfuric acid, which provides a compelling reason for dissolving each UO_2 charge completely.

In the shear-leach head end, no information on losses is available. The main possibility of loss is as undissolved UO_2 with the waste cladding, and in this study no provision for analysis or inspection was made. An extended leaching and washing time should solve this problem if it is a factor, of course at additional cost.

In both processes UO_2 fines that overflow with the product are collected in settlers and centrifuges and reworked.

6.4 Schedule of Dissolver Operation for Sulfex Head End Process

Dissolver operation was scheduled to utilize the minimum number of dissolvers to the maximum possible extent consistent with the estimated cycle time for dejacketing and core dissolution of a fuel element. The cycle time was estimated to be 12 hr, of which 7 hr is dejacketing and 5 hr is core dissolution. To process 12 assemblies per 24-hr day, a system consisting of six dissolvers operating in two parallel banks of three was chosen. The operation of the dissolvers during a 24-hr period, where D indicates decladding and C core dissolution, was:

Bank 1 DDDDDDD CCCCC DDDDDDD CCCCC

Bank 2 CCCCC DDDDDDD CCCCC DDDDDDD

This choice evens out the off-gas flow rate to some extent and allows a smaller off-gas system. If one dissolver becomes inoperable, only 1/6th of the plant capacity is lost until it can be replaced. The volume of nitrogen purge gas used between sulfuric acid cycles will be decreased somewhat by manifolding rather than providing for separate off-gas lines and hydrogen disposal systems for each of six dissolvers.

6.5 Hydrogen Evolution in Sulfex Head End Process

Hydrogen gas is produced by dissolution of stainless steel in sulfuric acid. To equalize the comparison, costs to cover its disposal were estimated by assuming the hydrogen to be burned with oxygen, as produced, in a special burner, the water condensed, and the remaining gas stream added to the main nitrogen off-gas stream. It was assumed that one of two units operated on-line and one was a spare. Operating costs associated with hydrogen disposal include those of hydrogen to maintain pilot lights, oxygen for combustion, and nitrogen for purge of every dissolver between sulfuric and nitric acid cycles to prevent the possibility of an explosion. This is not necessarily the best method for hydrogen disposal, but its use allows assignment of a cost to the process step and returns the gas to the main off-gas stream without an appreciable volume increase.

6.6 Rare Gas Handling

Rare gas handling and recovery were not considered as a cost factor in this study. The recovery systems (RAGS), if required, would be essentially identical for both processes. In calculating the material balance, however, air was used as a source of oxygen for oxidation of the nitrogen oxides to estimate maximum flow rates through the equipment. If a RAGS system was attached to the flowsheet, it would be advisable to use oxygen rather than air in order to decrease the volume of inerts and thus the capital and operating costs of the system. The amount of air inleakage into a system using oxygen is critical, but difficult to evaluate other than by experimental means.

The hydrogen produced in the Sulfex head end step will contain some rare gases. With a RAGS system, this must be recovered by re-introducing the stream from the hydrogen disposal system into the main off-gas. The volume is small relative to the main off-gas when air is used for oxidation but could be appreciable if oxygen is used for oxidation. The small nitrogen purge stream for the dissolvers between the sulfuric and nitric acid cycles, is another known source of inert diluent. In a shear-leach system using oxygen for oxidation, there are two sources of air inleakage of unknown magnitude: the shear feed envelope must be removed periodically

and the valve for removing leached stainless steel cladding for waste disposal must be opened regularly.

6.7 Building Costs

The overall use of floor space in the canyon for the two processes balanced out evenly and was therefore excluded as a factor in the cost estimate. The same number of viewing windows and the wall thicknesses are the same, and connected canal storage facilities are identical. The mechanical process has less canyon depth over much of its length, but the possible reduction in cost was considered slight. The Sulfex step actually required more floor space for installation of equipment, but this was balanced against additional canyon floor space required for storage of waste cans. The overall result was to produce no net charge against either process for building costs, which were therefore eliminated from the cost estimate.

6.8 Maintenance

In a plant of this size and type, remote maintenance is practiced through the first cycle of solvent extraction. Therefore, both head end steps have remote maintenance facilities, including two cranes and a canal. Adequate spare equipment is supplied where necessary to maintain operation. Groups of equipment items are unitized into single structural frames, where possible, for rapid replacement. Equipment is interconnected by single and multiple remote connectors (jumpers). The cost of jumper provisions for the two processes were made by estimating the number and cost of connectors and the cost of unitizing equipment. In considering floor space in the canyon, sufficient aisle and working space was left for equipment removal. For the mechanical head end process, however, a complete duplicate line of shear and three inclined-drum rotary units were required because individual replacement of equipment rapidly seemed impractical and would require a production shutdown. For the Sulfex, one unitized dissolver unit was provided as a spare for six operating units.

6.9 Special Mechanical Equipment

Two types of mechanical processing equipment unique in fuel processing work were used in the mechanical head end. Some features of these are

shown in this section by way of explanation.

Mechanical Shear. A mechanical shear capable of shearing complete assemblies of tubular fuels into discrete short lengths (0.5 - 2 in.) (Fig. A11) has been under development at ORNL.[1] A test model (Fig. A12) capable of shearing at least a 7- by 7-in. bundle of tubes and of producing a thrust of 250 tons of force was built by the Birdsboro Corporation and is being tested. A fuel assembly is inserted into the feed envelope by the loading cylinder and sealed with another (Fig. A12) which also contains the device (Fig. A13) to continue feeding the element as shearing proceeds. Shearing is accomplished by a stepped blade mounted on a traveling blade holder (Fig. A14) working against a fixed V blade. The blade holder is connected to a ram operated horizontally through the cell wall. Both blades can be replaced remotely. The blade holder rides on adjustable gib-bearing surfaces and comes out on a rack for maintenance when the swinging door at the end of the housing (Fig. A15) is opened. The feed envelope and cover plate are removable (Fig. A16), showing the gag, a device to hold the element firmly during shearing. The unit is completely sealed but has two windows to allow viewing the interior by TV during operation. Internal cleaning is provided for by a system of spray nozzles. Materials of construction are consistent with the proposed use of water and hot dilute nitric acid for cleaning.

Inclined Drum Rotary Processing Units. The inclined-drum rotary leacher[16,14] was conceived of for the purpose of continuously processing sheared feed in a completely closed system without the disadvantages of batch dissolvers where a leach basket containing pieces of sheared cladding would have to be withdrawn after every dissolution. One leacher unit (Fig. A17) has been built for test work and another of slightly different design for use as a feeder and conveyor. See Fig. 2, Sect. 3.0, for a cutaway view of conveyor-feeder and leacher-washer units. The unit operated satisfactorily with batches of 0.5-in.-dia by 1-in. long pieces of stainless steel rod. Solids are conveyed by rotating the inner drum, and leach acid or wash water can be flowed over them countercurrently. The outer shell provides containment. It is provided with appropriate solids feed and discharge ports, liquid feed and drain lines, and an off-gas connection

as required for the particular operation. This particular model is fitted for both leaching and washing in the same unit.

UNCLASSIFIED
ORNL-LR-DWG 63319

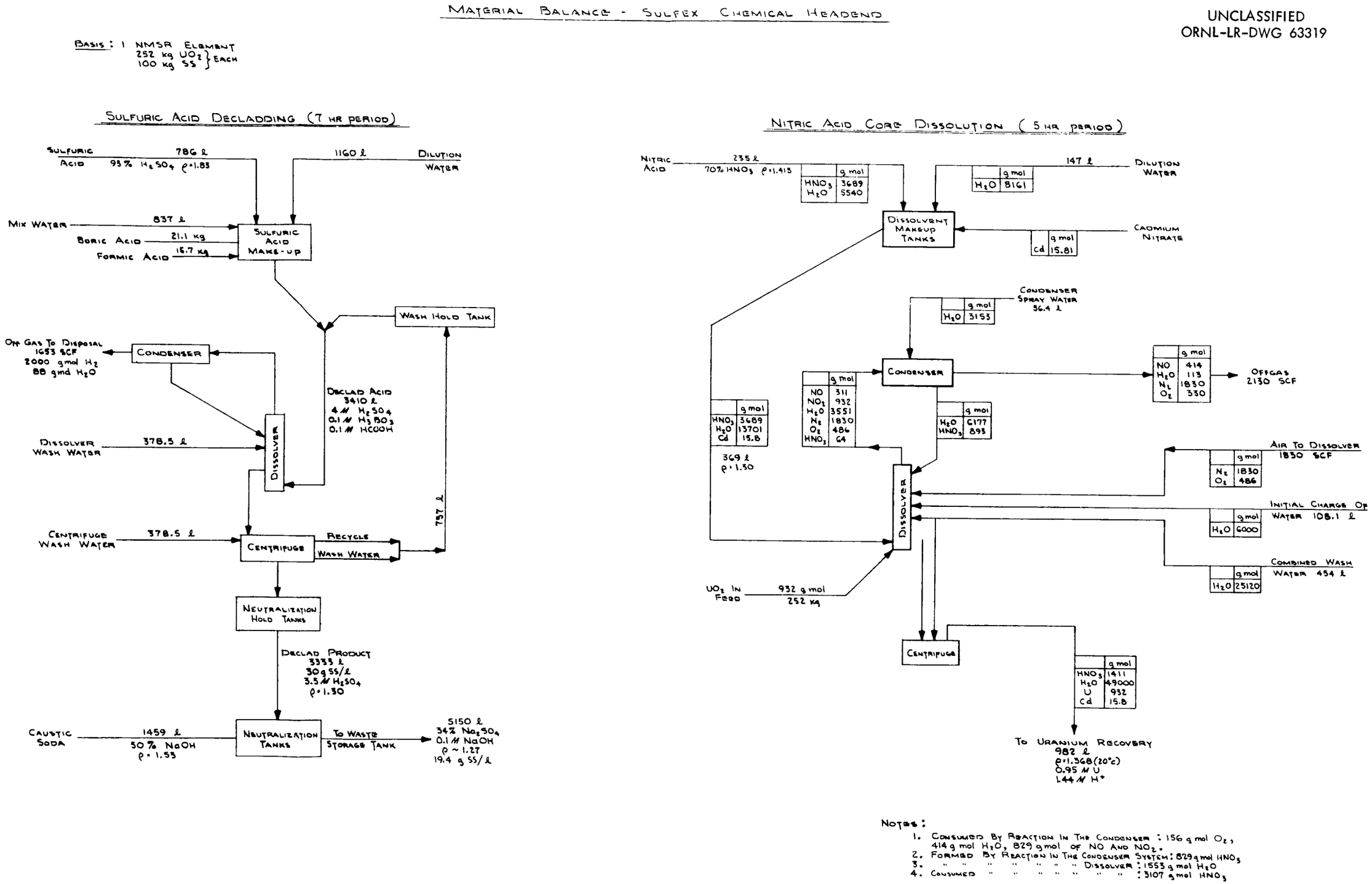

Fig. A.1. Sulfex chemical head-end process: material balance flowsheet.

UNCLASSIFIED
ORNL-LR-DWG 63320

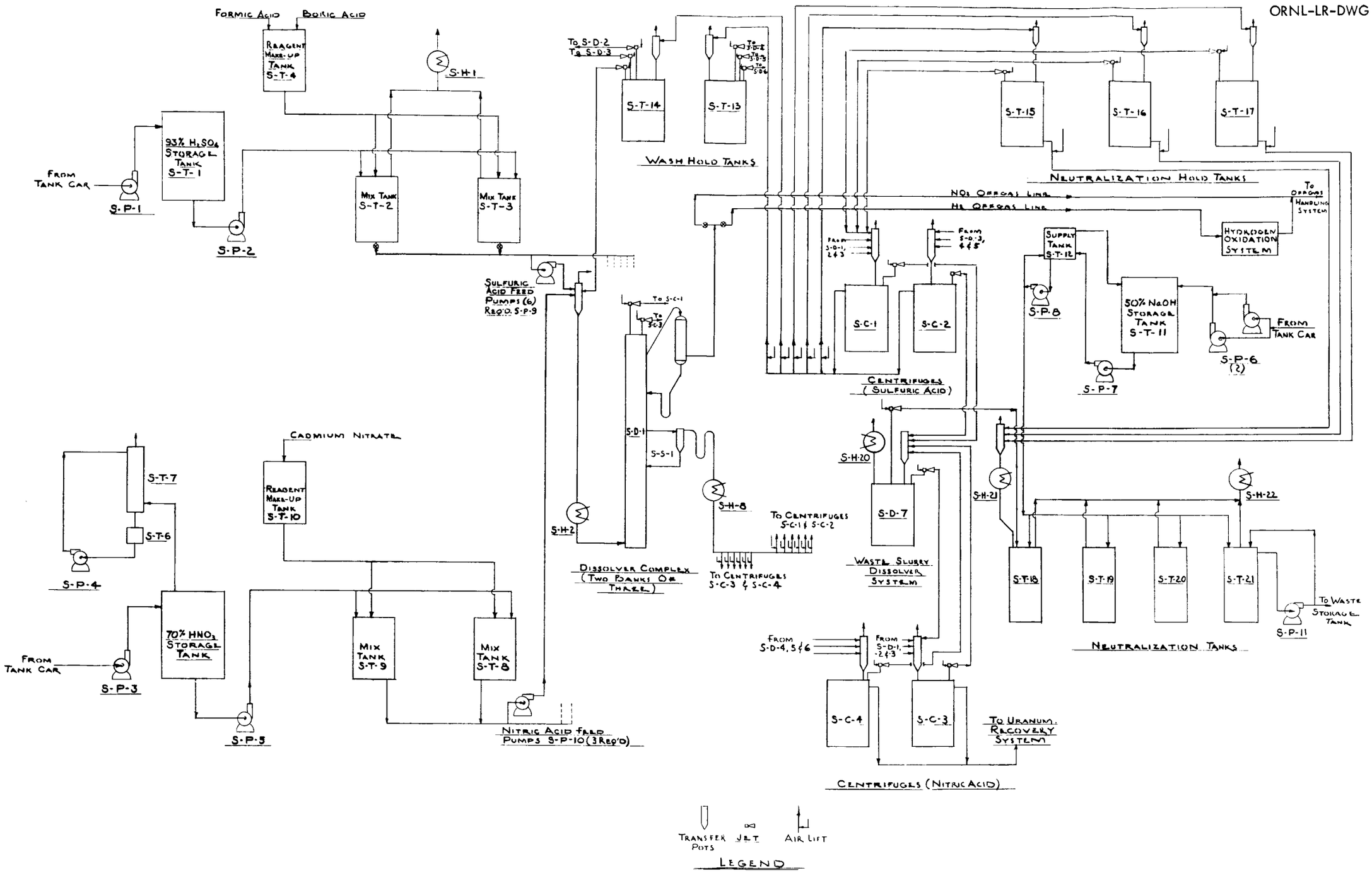

Fig. A.2. Sulfex chemical head-end process: equipment flowsheet.

UNCLASSIFIED
ORNL-LR-DWG 63321

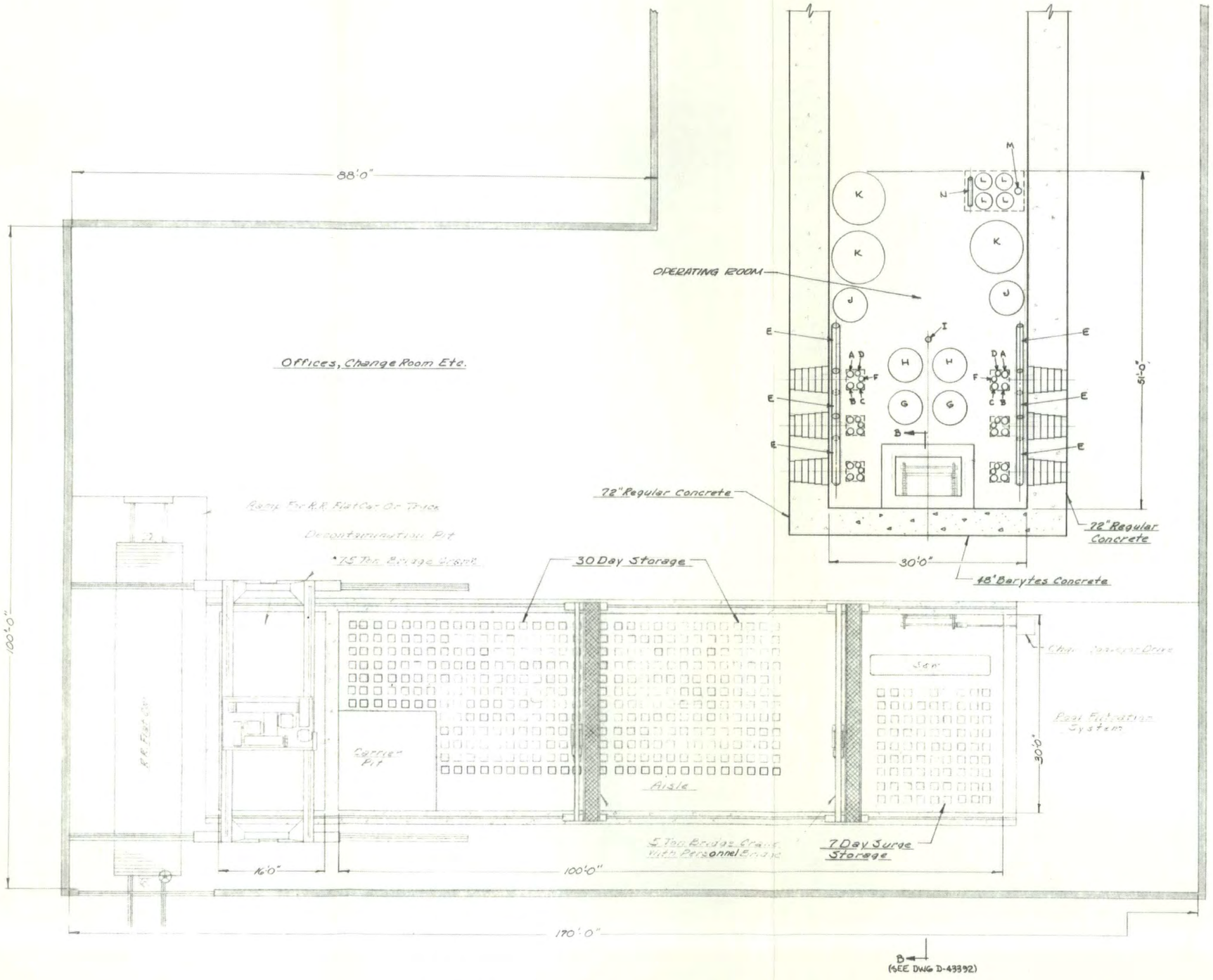

Fig. A.3. Sulfex chemical head-end process: plant first floor plan.

UNCLASSIFIED
ORNL-LR-DWG 63322

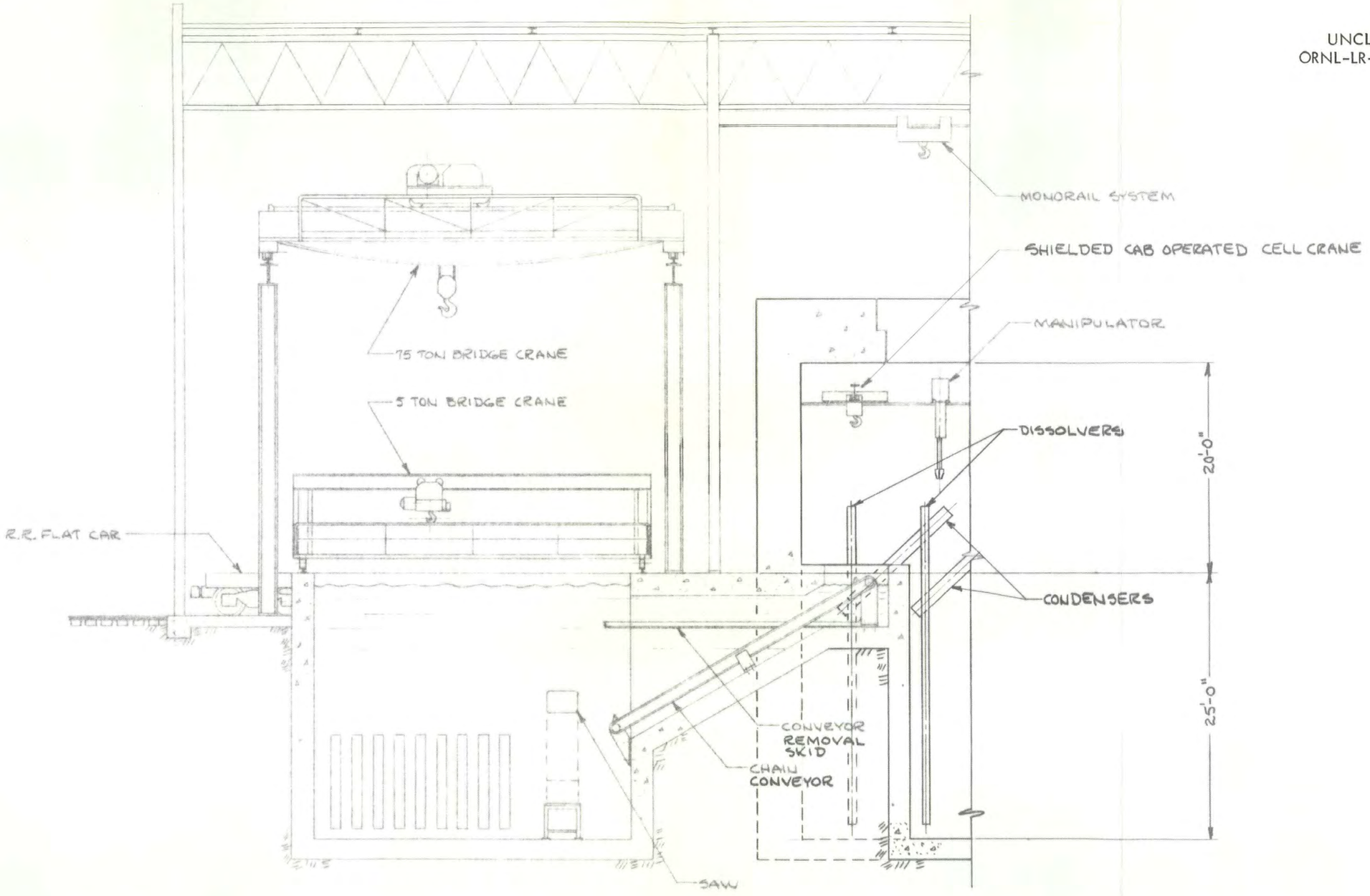

SECTION B-B
(DWG. D-37245)

Fig. A.4. Sulfex chemical head-end process: sectional elevation.

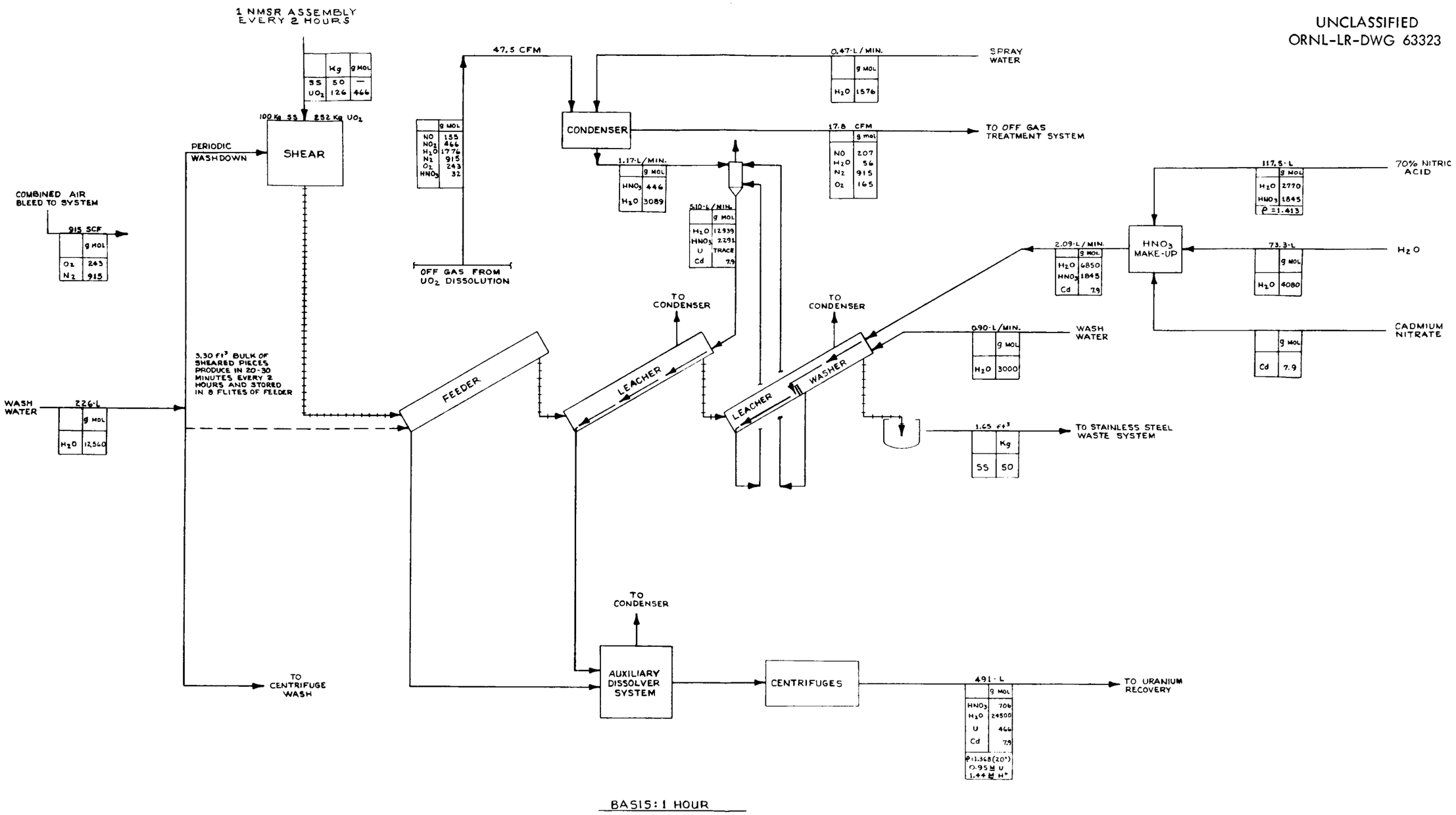

NOTES:

1. CONSUMED BY REACTION IN CONDENSER: 78 g MOL O_2, 207 g MOL H_2O, 414 g MOL OF NO AND NO_2
2. CONSUMED BY REACTION IN DISSOLVER : 1553 g MOL HNO_3
3. FORMED BY REACTION IN DISSOLVER : 777 g MOL H_2O
4. FORMED BY REACTION IN CONDENSER : 414 g MOL HNO_3

Fig. A.5. Mechanical head-end process: material balance flowsheet.

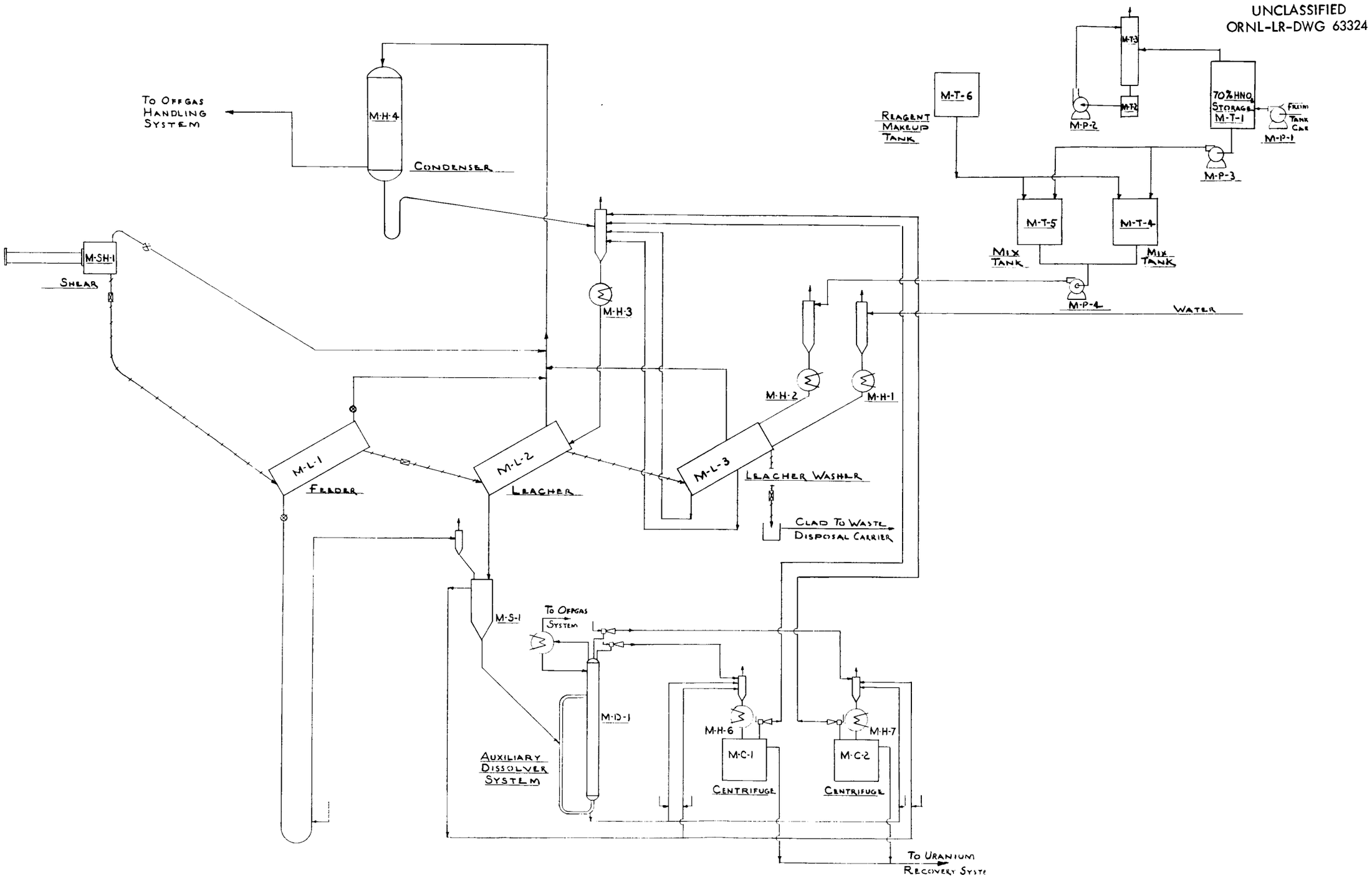

Fig. A.6. Mechanical head-end process: equipment flowsheet.

UNCLASSIFIED
ORNL-LR-DWG 63325

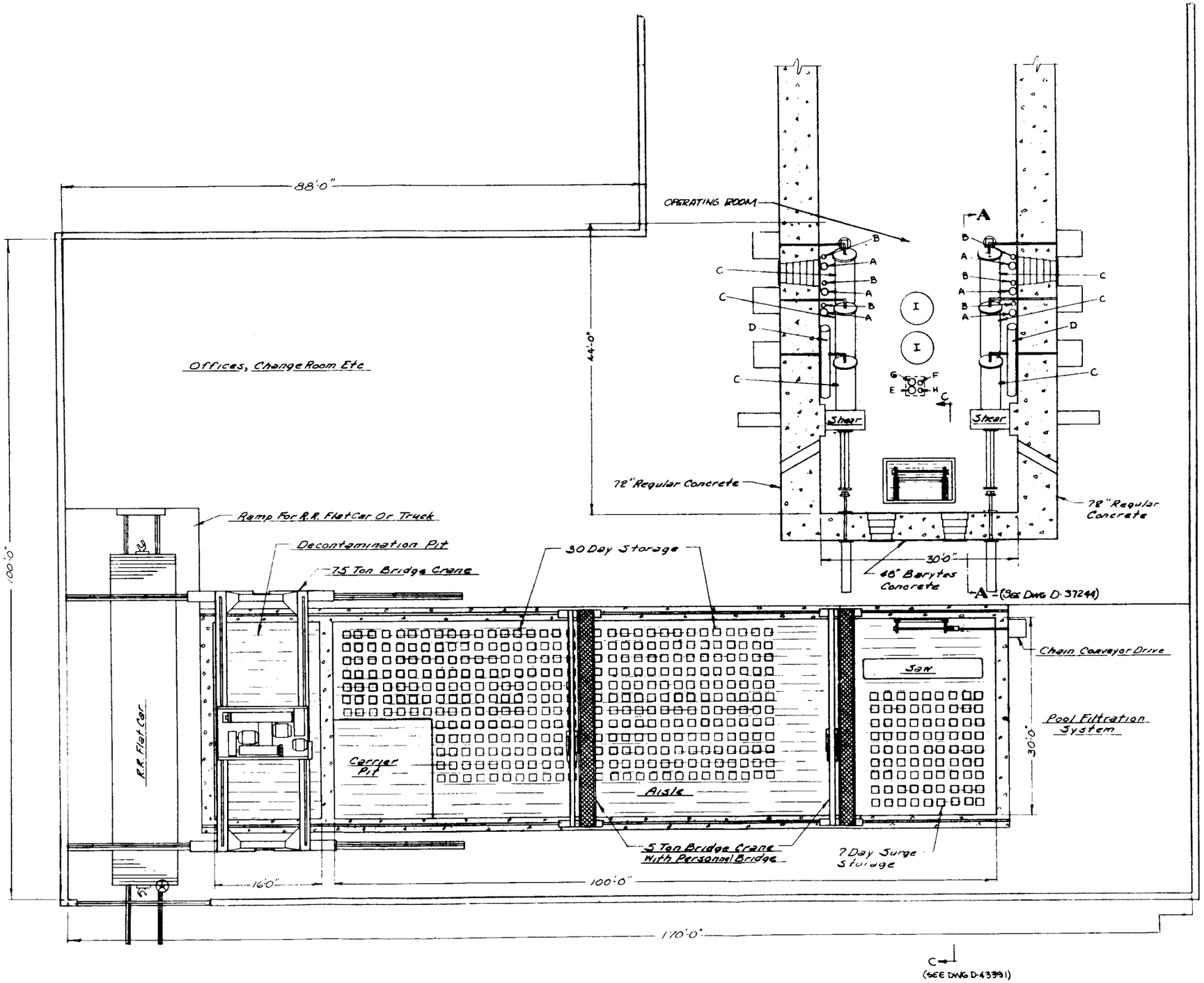

Fig. A.7. Mechanical head-end process: plant first floor plan.

UNCLASSIFIED
ORNL-LR-DWG 63326

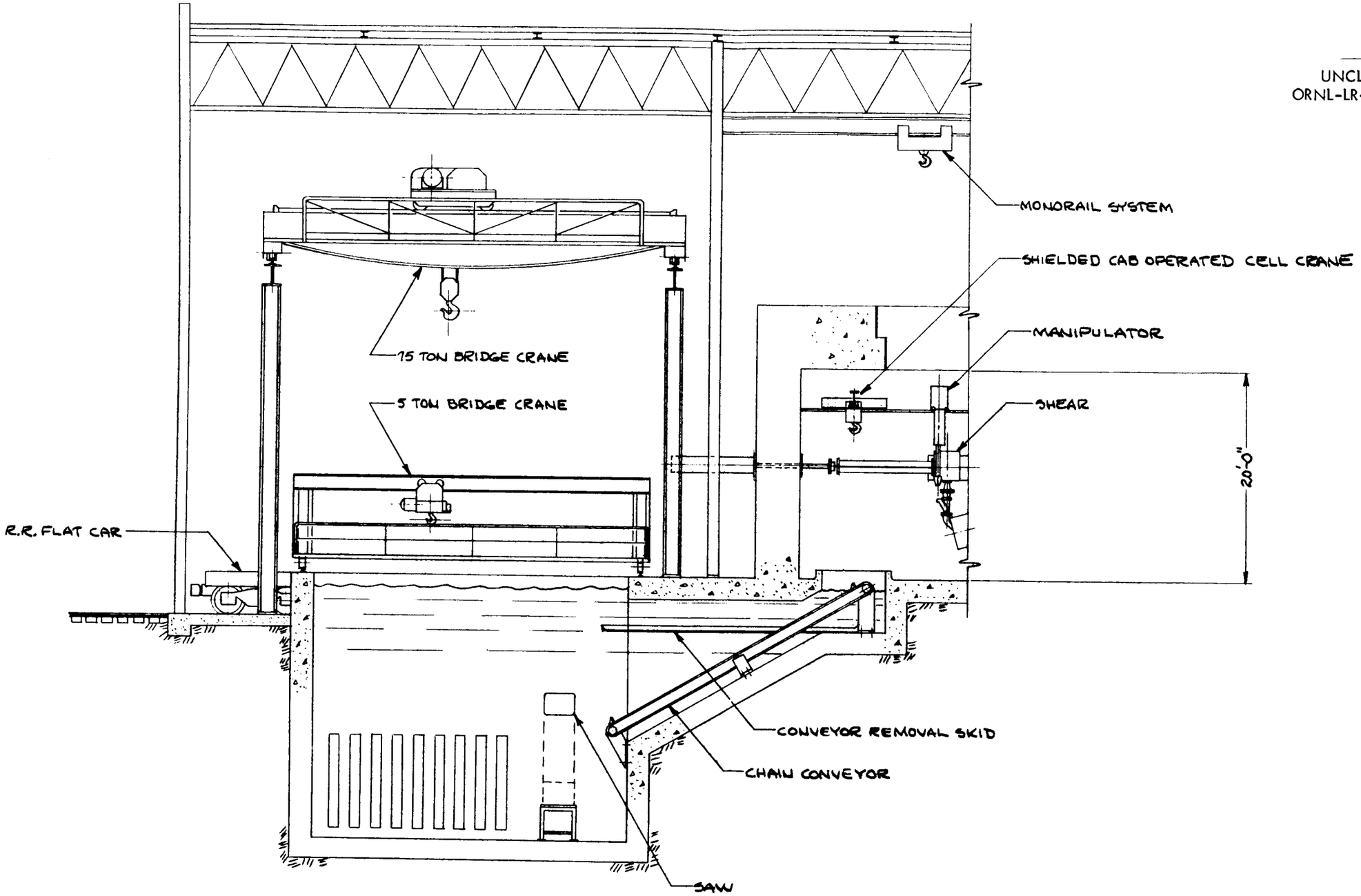

SECTION C-C
(DWG D-97243)

Fig. A.8. Mechanical head-end process: sectional elevation.

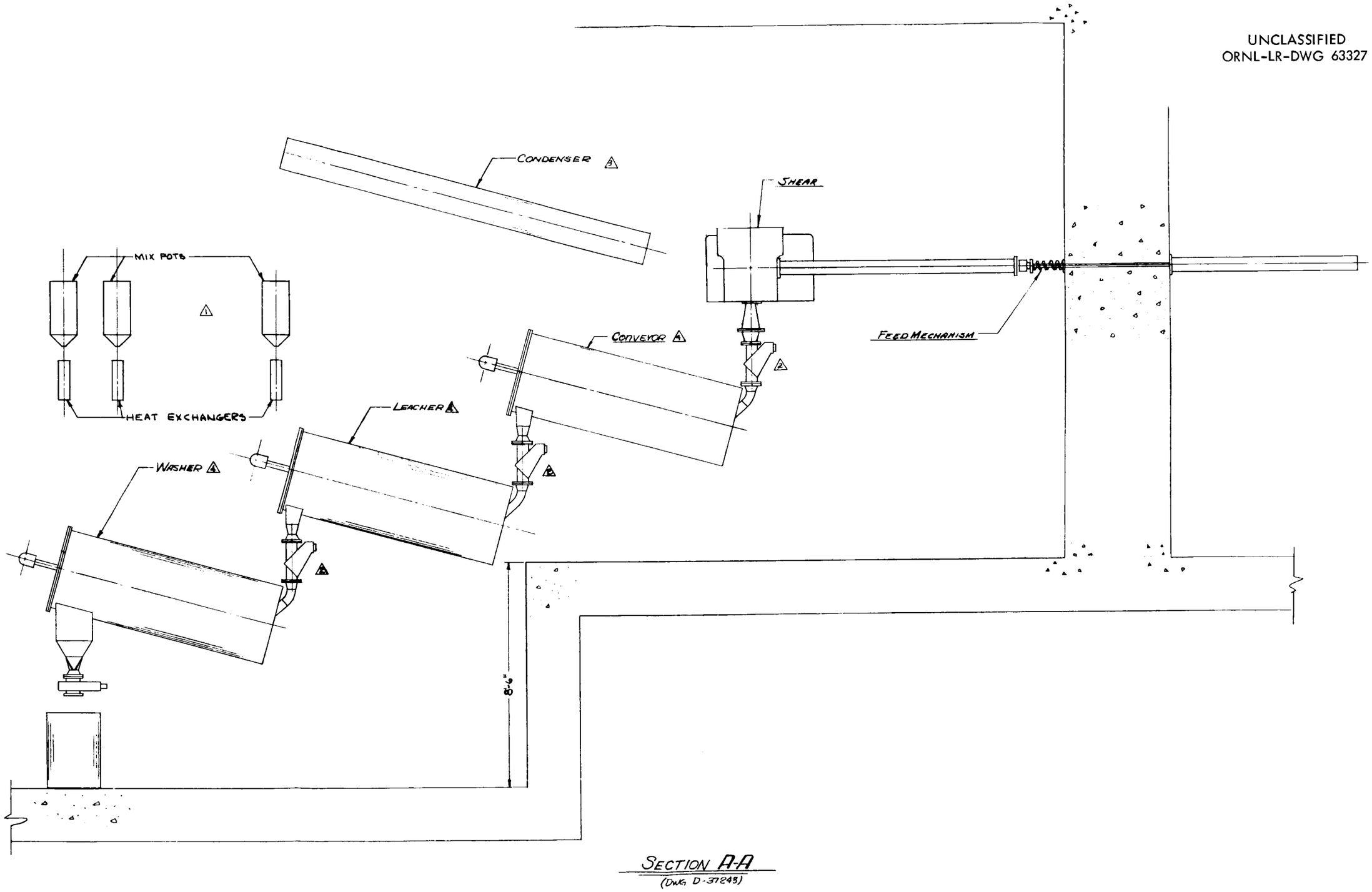

Fig. A.9. Mechanical head-end process: sectional elevation.

UNCLASSIFIED
ORNL-LR-DWG 63328

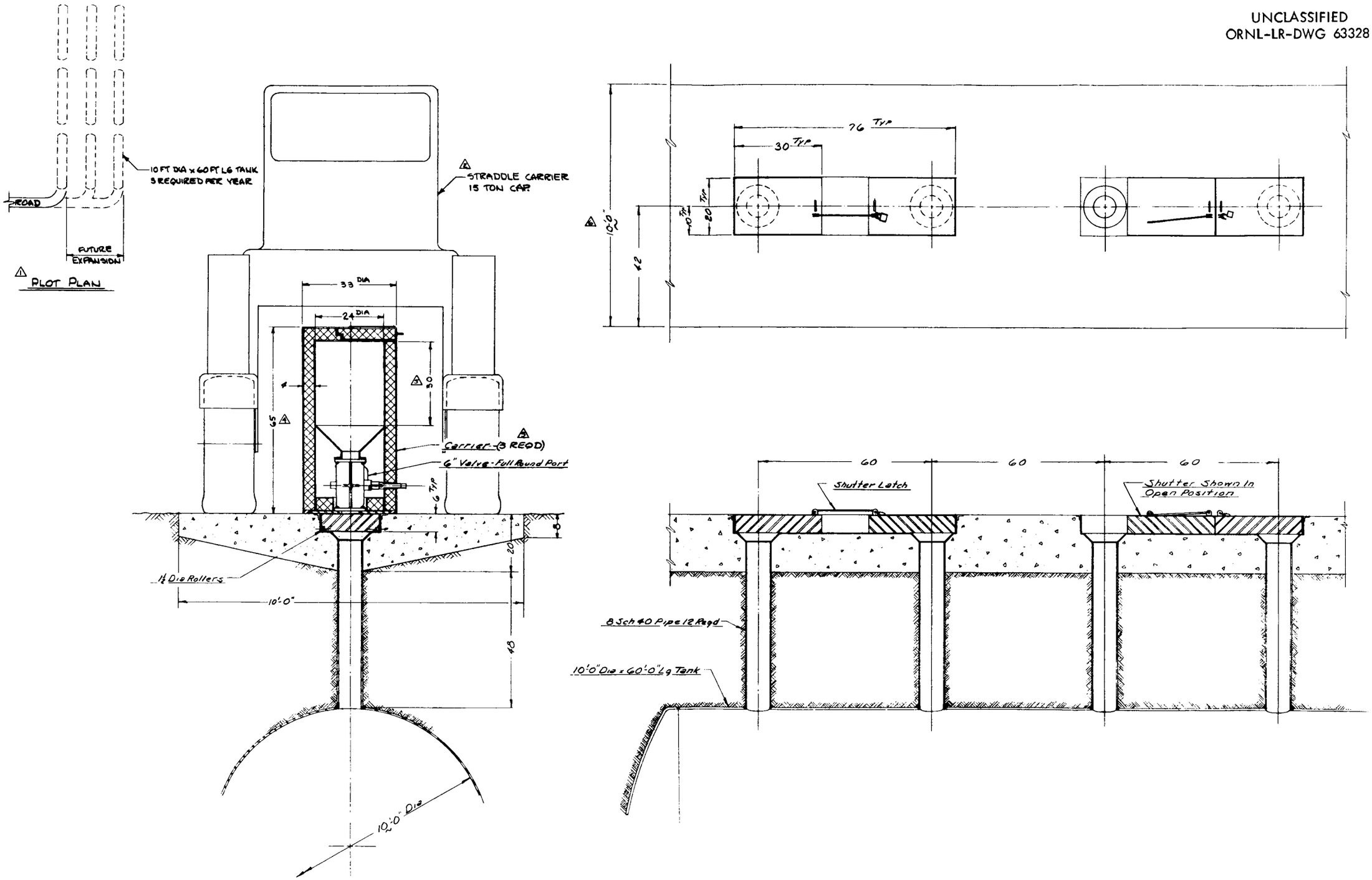

Fig. A.10. Mechanical head-end process: waste disposal.

Table A1. Sulfex Equipment Cost at Engineering News Record Index of 813

No.	Quantity	Description	Material	Unit Cost	Total Cost
		Nonradioactive Equipment (Installed)			
S-T-1	1	H_2SO_4 storage tank, 75,000 gal	Mild steel	$ 18,000	$ 18,000
S-T-2,3	2	H_2SO_4 mix tank, 2,500 gal with agitator	Nionel	58,600	117,200
S-T-4	1	H_3BO_3-HCOOH mix tank, 1,000 gal with agitator	304 SS	9,000	9,000
S-T-5	1	HNO_3 storage tank, 2,500 gal	304 SS	32,000	32,000
S-T-6	1	Scrubber surge tank, 30 gal	304 SS	760	760
S-T-7	1	Packed scrubber, 6 in. dia x 4 ft with packing	304 SS	780	780
S-T-8,9	2	HNO_3 mix tank, 400 gal, with agitator	304 SS	5,500	11,000
S-T-10	1	$Cd(NO_3)_2$ mix tank, 100 gal with agitator	304 SS	3,100	3,100
S-T-11	1	NaOH storage tank, 140,000 gal	Mild steel	24,400	24,400
S-T-12	1	NaOH supplying tank, 200 gal	Mild steel	840	840
S-P-1	2	H_2SO_4 loading pump and drive, 20 gpm, 10 hp	304 SS	1,620	3,240
S-P-2	2	H_2SO_4 batch loading pump and drive, 10 gpm, 5 hp	304 SS	1,290	2,580
S-P-3	2	HNO_3 loading pump and drive, 10 gpm, 3 hp	304 SS	1,200	2,400
S-P-4	2	Scrubber circulating pump, 2 gpm, 1/2 hp	304 SS	800	1,600
S-P-5	2	HNO_3 batch loading pump and drive, 3 gpm, 1 hp	304 SS	920	1,840
S-P-6	3	NaOH loading pump and drive, 20 gpm, 5 hp	304 SS	1,440	4,320
S-P-7	2	NaOH batch loading pump and drive, 3 gpm, 1 hp	304 SS	925	1,850
S-P-8	2	NaOH feed pump and drive, 3 gpm, 1 hp	304 SS	925	1,850

Table A1. (Continued)

No.	Quantity	Description	Material	Unit Cost	Total Cost
S-P-9	8	H_2SO_4 dissolver feed pump and drive, 2.5 gpm, 3/4 hp	Nionel	$ 1,410	$ 11,280
S-P-10	4	HNO_3 dissolver feed pump and drive, 1 gpm, 1/2 hp	304 SS	715	2,860
S-H-1	1	H_2SO_4 mix tank condenser, 10 ft^2	304 SS	1,260	1,260
		Installed			$252,160
		Radioactive Equipment (Delivered)			
S-D-1-6	6	Dissolver, steam jacket	Nionel, SS jacket	14,000	84,000
S-D-7	1	Waste slurry dissolver	Nionel, SS jacket	7,000	7,000
S-T-13,14	2	Wash hold tank, 800 gal	304 SS	4,040	8,080
S-T-15-17	3	Neutralization hold tank, 3,000 gal, safe bottom	Nionel	18,600	55,800
S-T-18-21	4	Neutralization tank, cooling jacket, 200 gal	Nionel, 304 SS jacket	5,020	20,080
S-P-11	2	Waste pump and drive, 12 gpm, 5 hp	Nionel	1,820	3,640
S-H-2-7	6	Dissolver feed preheater, 10 ft^2	Nionel, 304 SS shell	1,200	7,200
S-H-8-13	6	Product cooler, 12 ft^2	Nionel, 304 SS shell	1,330	7,980
S-H-14-19	6	Dissolver condensers, 250 ft^2	Nionel, 304 SS shell	16,600	99,600
S-H-20	1	Waste slurry dissolver condenser, 250 ft^2	Nionel, 304 SS shell	2,380	2,380
S-H-21	1	Waste precooler, 55 ft^2	Nionel, 304 SS shell	3,220	3,220
S-H-22	1	Neutralization condenser, 10 ft^2	Nionel, 304 SS shell	1,360	1,360
S-S-1-6	6	Dissolver settlers, 1 ft dia x 5 ft	Nionel	1,300	7,800
S-C-1-2	2	Centrifuge for H_2SO_4, 48 in dia	Nionel	130,000	260,000
S-C-3,4	2	Centrifuge for HNO_3, 48 in. dia	304 SS	72,500	145,000

Table A1. (Continued)

No.	Quantity	Description	Material	Unit Cost	Total Cost
	17	Transfer pots	Nionel, 15 304 SS, 2	$ 353 227	$ 5,749
	31	Jets	Nionel, 29 304 SS, 2	300 150	9,000
	6	Unitizing dissolver complex		7,000	42,000
	1	Unitizing waste slurry complex		2,000	2,000
	1	Unitizing neutralization complex		5,000	5,000
	29	Remote connectors (simple)	Nionel	300	8,700
	44	Remote connectors (complex)	Nionel	1,000	44,000
	2	Hydrogen disposal unit	Nionel	5,200	10,400
		Delivered			$839,989
	Spare	Equipment (Delivered, not Installed)			
S-D-1	1	Dissolver			$ 14,000
S-H-2	1	Preheater			1,200
S-H-8	1	Product cooler			1,330
S-H-14	1	Condenser			16,600
S-S-1	1	Settler			1,300
	1	Unitizing dissolver complex			7,000
S-T-18-21	4	Waste neutralization tank			20,080
S-H-21	1	Waste precooler			3,220
S-H-22	1	Waste condenser			1,360
	1	Unitizing waste neutralization complex			5,000
S-P-11	1	Waste pump			1,820
S-C-1	1	Centrifuge			130,000
	1	Hydrogen disposal unit			5,200
	15	Remote connectors (complex)			15,000
		Delivered, not Installed			$223,110

Table A2. Shear-Leach Equipment Cost at Engineering News Record Index of 813

No.	Quantity	Description	Material	Unit Cost	Total Cost
		Nonradioactive Equipment (Installed)			
M-T-1	1	HNO_3 storage tank, 25,000 gal	304 SS	$ 32,000	$ 32,000
M-T-2	1	Scrubber surge tank, 30 gal	304 SS	760	760
M-T-3	1	Packed scrubber, 6 in. dia x 4 ft	304 SS	780	780
M-T-4,5	2	HNO_3 mix tank, 600 gal with agitator	304 SS	7,100	14,200
M-T-6	1	$Cd(NO_3)_2$ mix tank, 100 gal with agitator	304 SS	3,100	3,100
M-P-1	2	HNO_3 loading pump and drive, 10 gpm, 3 hp	304 SS	1,200	2,400
M-P-2	2	Scrubber circulating pump, 2 gpm, 1/2 hp	304 SS	800	1,600
M-P-3	2	HNO_3 batch loading pump, and drive, 3 gpm, 1 hp	304 SS	920	1,840
M-P-4	3	Leacher feed pump and drive, 1 gpm, 1/4 hp	304 SS	715	2,145
		Installed			$ 58,825
		Radioactive Equipment (Delivered)			
M-H-1	2	Wash water preheater, 5 ft^2	304 SS	$ 625	$ 1,250
M-H-2	2	HNO_3 feed preheater, 5 ft^2	304 SS	625	1,250
M-H-3	2	HNO_3 recycle preheater, 5 ft^2	304 SS	625	1,250
M-H-4	2	Leacher condenser, 250 ft^2	304 SS	10,500	21,000
M-H-5	1	Auxiliary dissolver condenser, 25 ft^3	304 SS	1,830	1,830
M-H-6,7	2	Product cooler, 8 ft^2	304 SS	810	1,620
M-L-1	2	Inclined drum rotary conveyor-feeder, 3 ft dia x 8 ft overall; 5-hp drive, reducer speed control; 12 0.4-ft^3 flights without overflow slots, central pipe filled with polyethylene rods, inside of central pipe and outer shell	304 SS	22,300	44,600

Table A2. (Continued)

No.	Quantity	Description	Material	Unit Cost	Total Cost
		covered full length with 20-mil Cd sheet encapsulated in 304 SS; liquid drain, off-gas connection, and solids valve			
M-L-2	2	Inclined-drum rotary leacher 3 ft dia x 8 ft overall; 3 hp drive reducer, speed control; 12 0.4-ft^3 flights to level of liquid overflow slots in each flight; liquid drain, off-gas connection, solids discharge port, acid feed line; steam jacket full length of outer shell	304 SS	$ 20,100	$ 40,200
M-L-3	2	Inclined-drum rotary leacher-washer; same as M-L-2 with porous draining section in 8th flight, wash water feed line	304 SS	21,200	42,400
M-D-1	1	Auxiliary dissolver 6 in. dia x 12 ft, steam jacket	304 SS	5,500	5,500
M-S-1	1	Settler, 1 ft dia x 5 ft	304 SS	650	650
M-C-1,2	2	Centrifuge, 48 in. dia	304 SS	72,500	145,000
	6	Transfer pots	304 SS	227	1,362
	4	Jets	304 SS	150	600
	1	Unitizing auxiliary dissolver, complex		3,000	3,000
	40	Remote connectors (simple)	304 SS	270	10,800
	21	Remote connectors (complex)	304 SS	910	19,110
M-SL-1	2	Shear complex: 500 ton-shear, 300-hp drive, hydraulic system 12 in. thrust; valve, feed mechanism, water spray-down system, 2-in. blade and anvil		210,000	420,000
	12	Feed envelopes for fuel elements		400	4,800
		Delivered			$766,222

Table A2. (Continued)

No.	Quantity	Description	Material	Unit Cost	Total Cost
		Spare Equipment (Delivered, not Installed)			
M-C-1	1	Centrifuge		$ 72,500	$ 72,500
	10	Remote connectors (complex)		910	9,100
	4	Blade and anvil set for shear		3,000	12,000
	2	Sets of gibs (wearing surfaces)		5,000	10,000
			Delivered, not Installed		$103,600

Table A3. Annual Costs of Materials and Utilities

Materials	Sulfex	$	Shear-Leach	$
HNO_3 (70%)	1321 tons/yr at $138/ton	182,500	1321 tons/yr at $138/ton	182,500
$Cd(NO_3)_2$	CdO 7230 lb/yr at $1.77 lb; HNO_3 (100%) 3.54 tons/yr at $197/ton	13,478	CdO 7230 lb/yr at $1.77/lb; HNO_3 (100%) 3.54 tons/yr at $197/ton	13,478
H_3BO_3	83.8 tons/yr at $160/ton	13,400		
H_2SO_4 (93%)	5710 tons/yr at $32/ton	182,800		$195,978
Formic acid (90%)	69.3 tons/yr at $0.19/lb	26,300		
NaOH (50%)	8870 tons/yr at $64/ton	567,000		
Nitrogen gas	505 MSCF/yr at $10/1000 ft^3	5,050		
Hydrogen gas	2 cylinders/day, 300 days/yr at $20/cylinder	6,000		
Oxygen gas	3130 MSCF/yr at $2.40/1000 ft^3	7,520		
		$1,004,048		

Utility	Unit Cost (dollars)	Sulfex Amount in MM/year	Sulfex Cost (dollars)	Shear-Leach Amount in MM/year	Shear-Leach Cost (dollars)
Steam	0.70/1000 lb	6.1 lb	4,330	2.5 lb	1,750
Air	0.03/1000 ft^3	7.8 SCF	234	1.29 SCF	39
Water	0.05/1000 gal	38.7 gal	1,935	10.1 gal	505
Electricity	0.010/kw hr	0.273 watt hr	2,730	0.397 watt hr	3,970
			$9,229		$6,264

Table A4. Annual Operating Labor Costs
(Excluding Supervision)

Operation	Sulfex No. of men required	Shear-Leach No. of men required
Load and operate shear	-	2.5
Operate leacher system	-	2
Operate 3 batch dissolvers	2	-
Operate 3 batch dissolvers	2	-
Makeup HNO_3	1	1
Makeup H_2SO_4	1	-
Hydrogen disposal	0.5	-
Receiving	0.5	0.5
Operate 2 centrifuges	2	2
Operate 2 centrifuges	2	-
Waste slurry dissolver	1	1
Neutralization and hold tanks	2	-
	14	9
	14 men per shift, 4 shifts, 56 men total	9 men per shift, 4 shifts, 36 men total
	$56 \text{ men} \times \frac{40 \text{ hr}}{\text{man wks}} \times \frac{52 \text{ wk}}{\text{yr}} \times \$3.00/\text{hr} =$	$36 \text{ men} \times \frac{40 \text{ hr}}{\text{man wks}} \times \frac{52 \text{ wk}}{\text{yr}} \times \$3.00/\text{hr} =$
	\$349,000	\$224,000

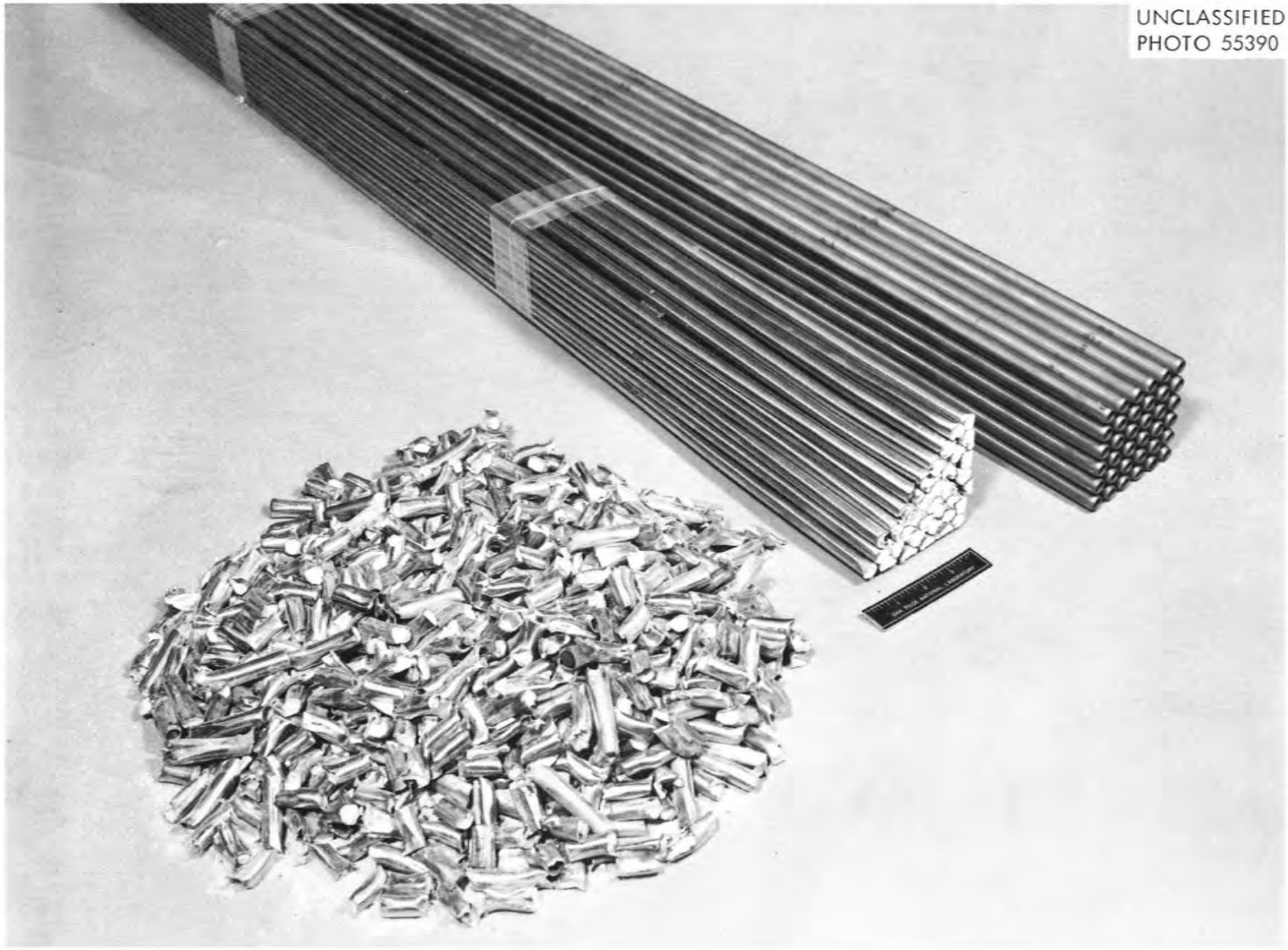

Fig. A-11. Fuel assemblies (porcelain-filled) and sheared pieces.

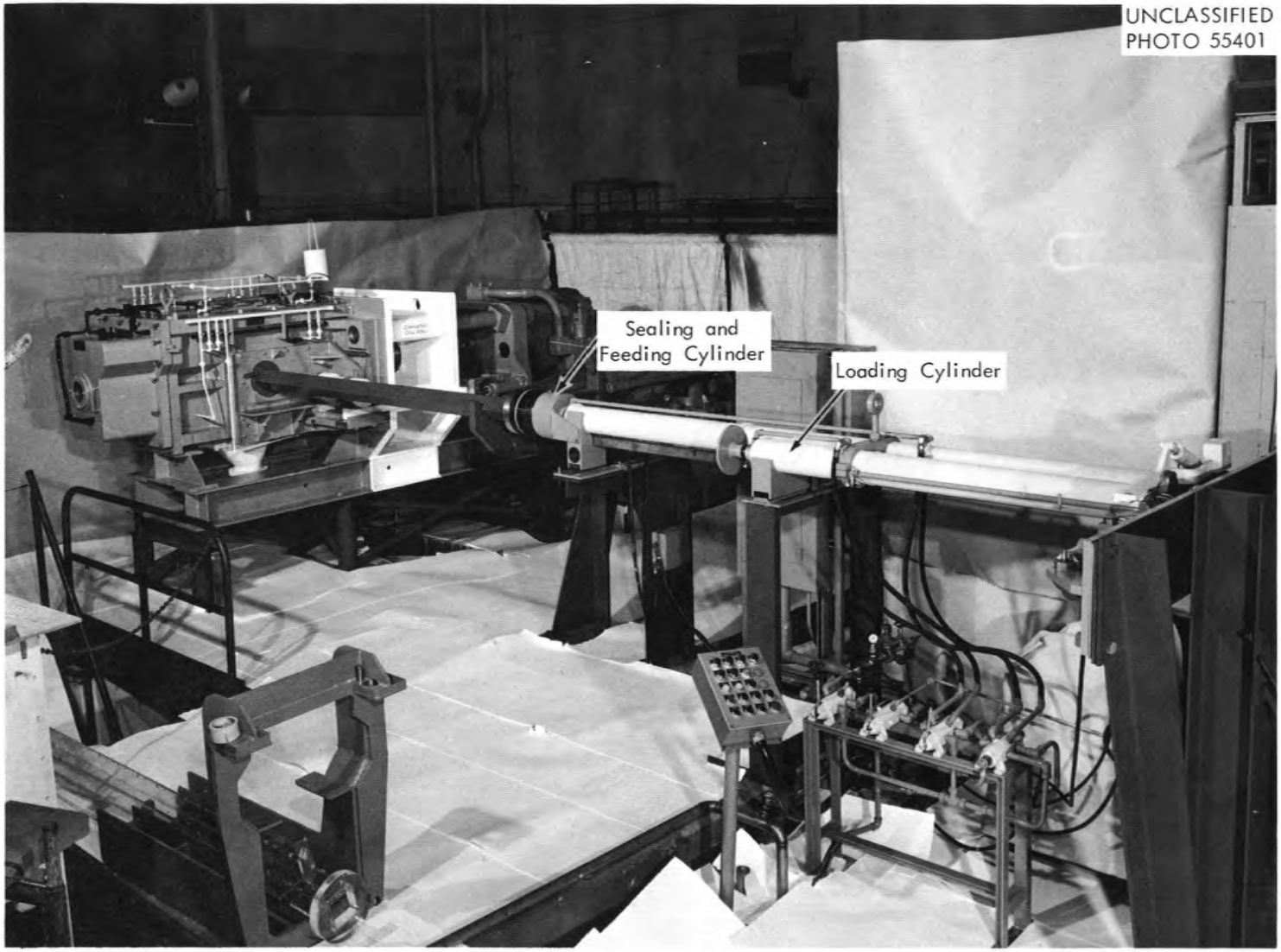

Fig. A-12. 250-Ton shear on test stand.

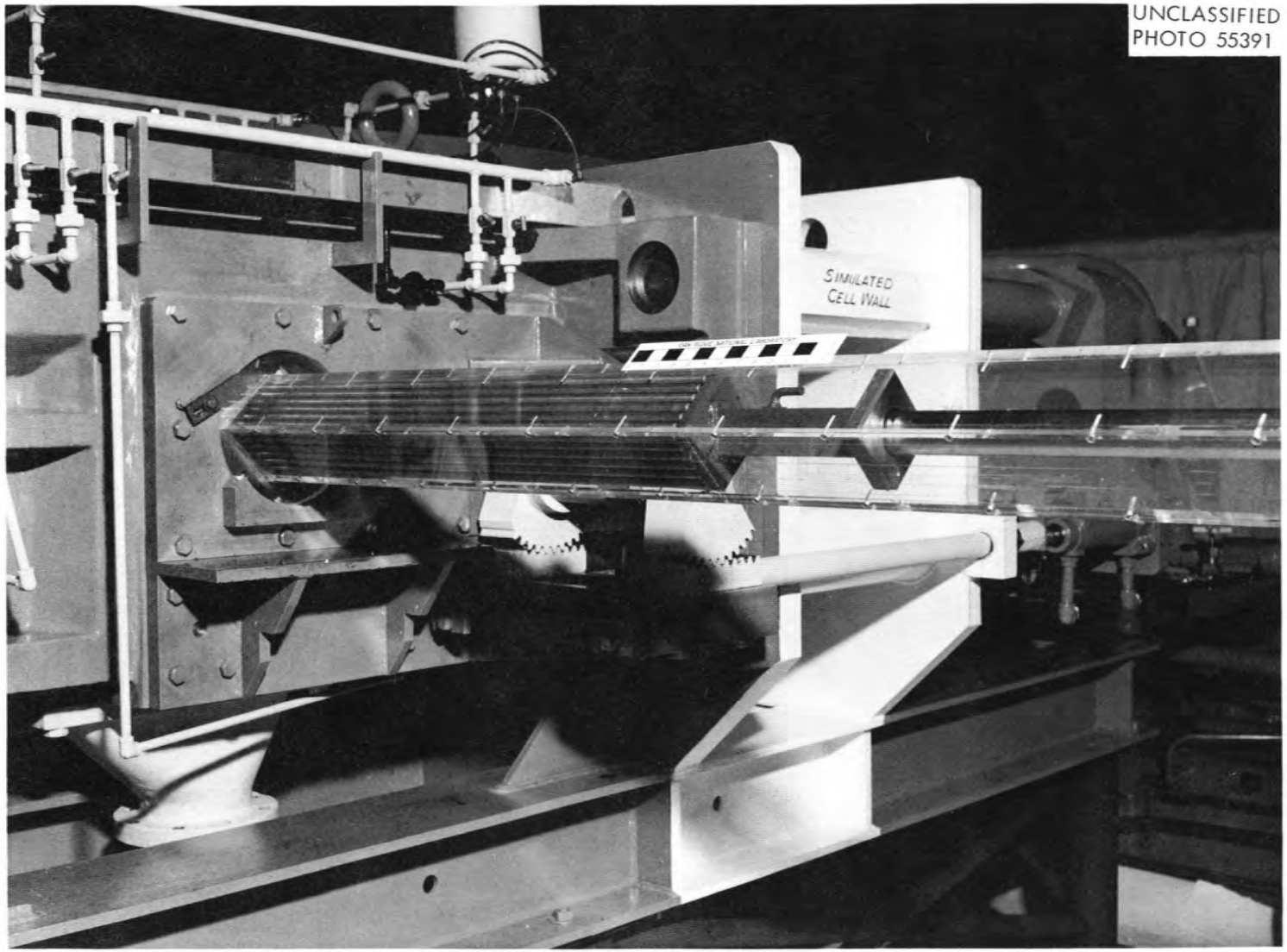

Fig. A-13. Fuel assembly inside plastic envelope being fed into shear by feed arm.

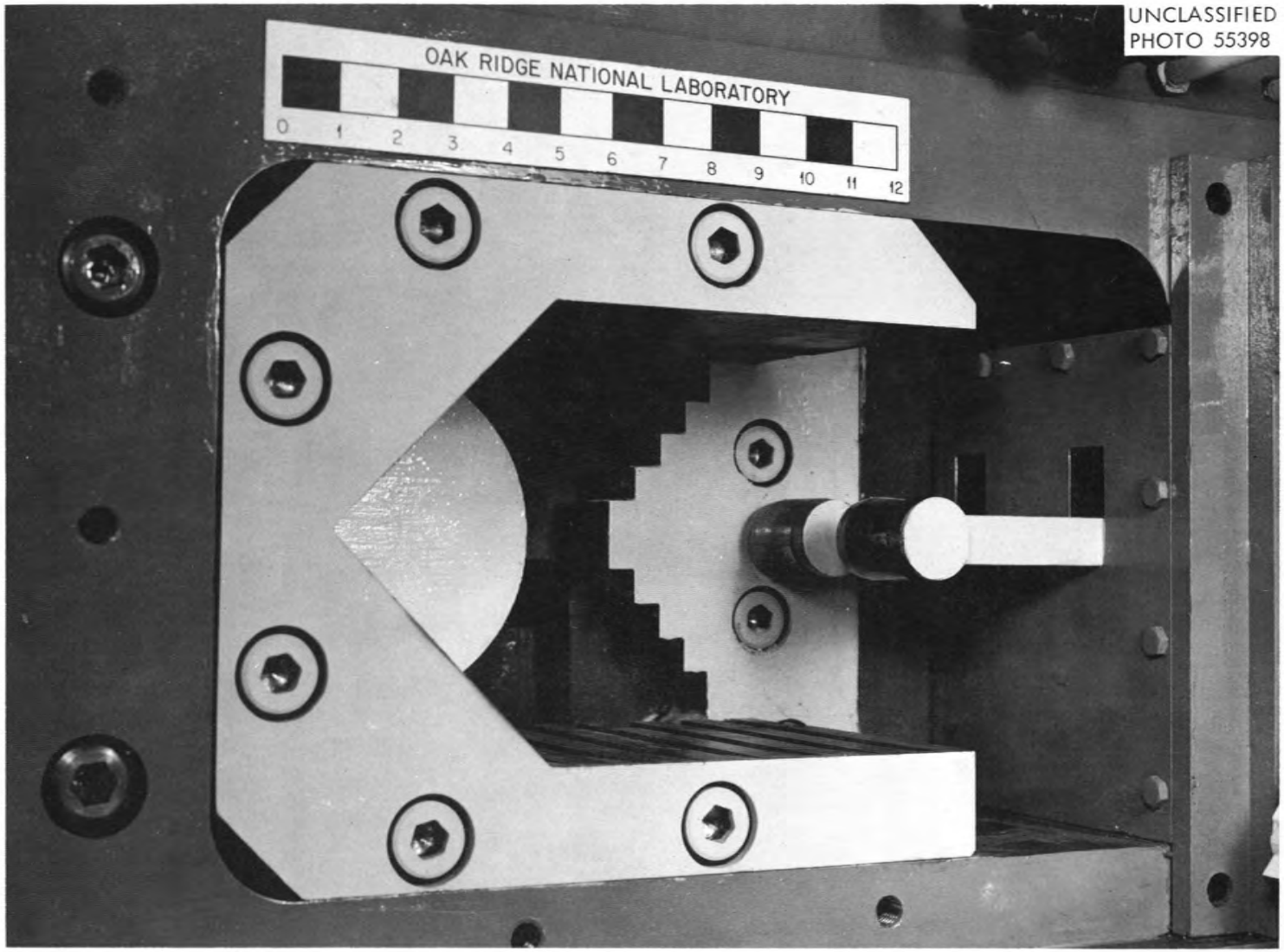

UNCLASSIFIED
PHOTO 55398

Fig. A-14. Fixed V-blade and moving stepped blade of shear with circular stop in background.

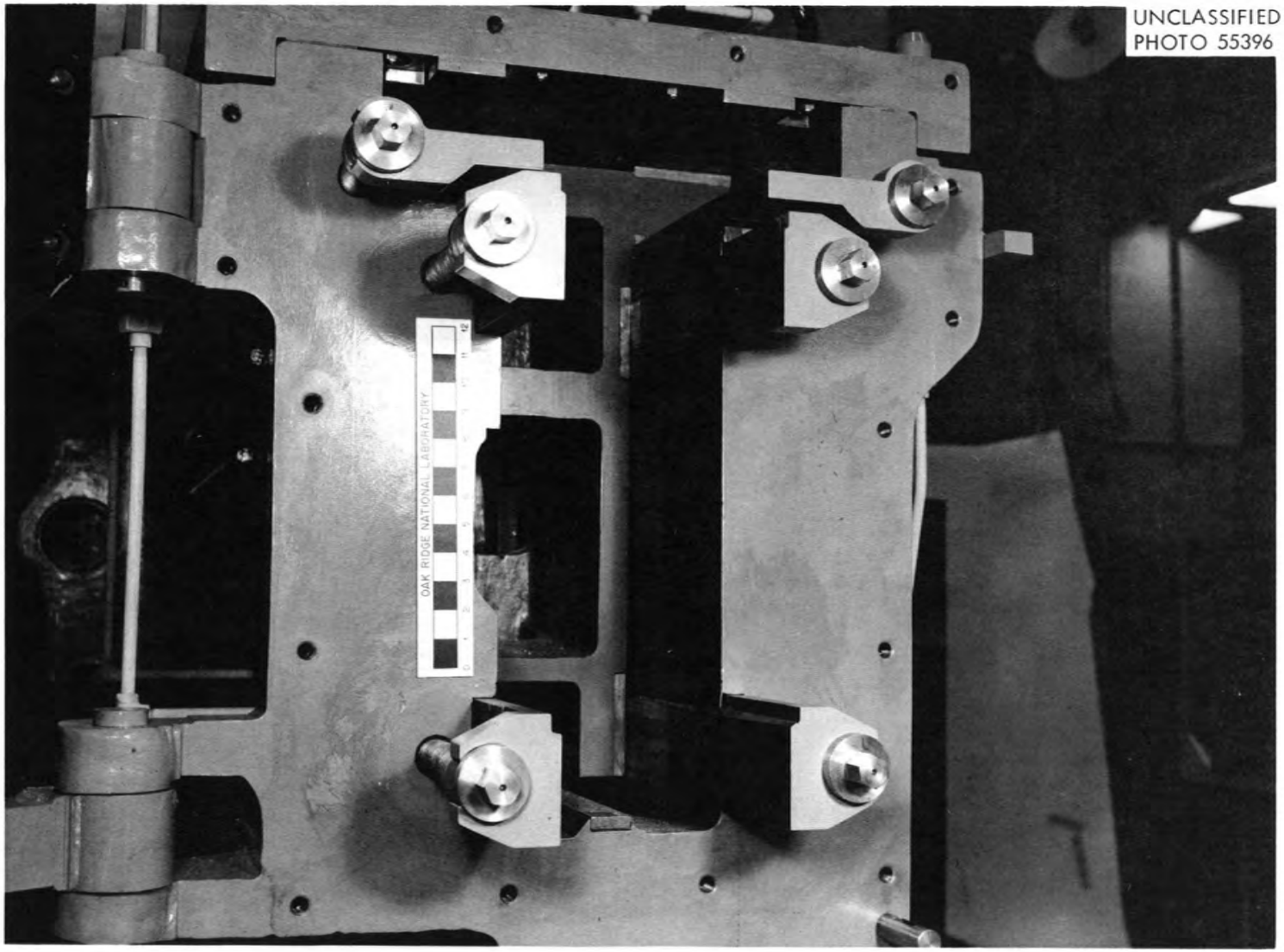

Fig. A-15. Shear with end housing open showing gibs and ram.

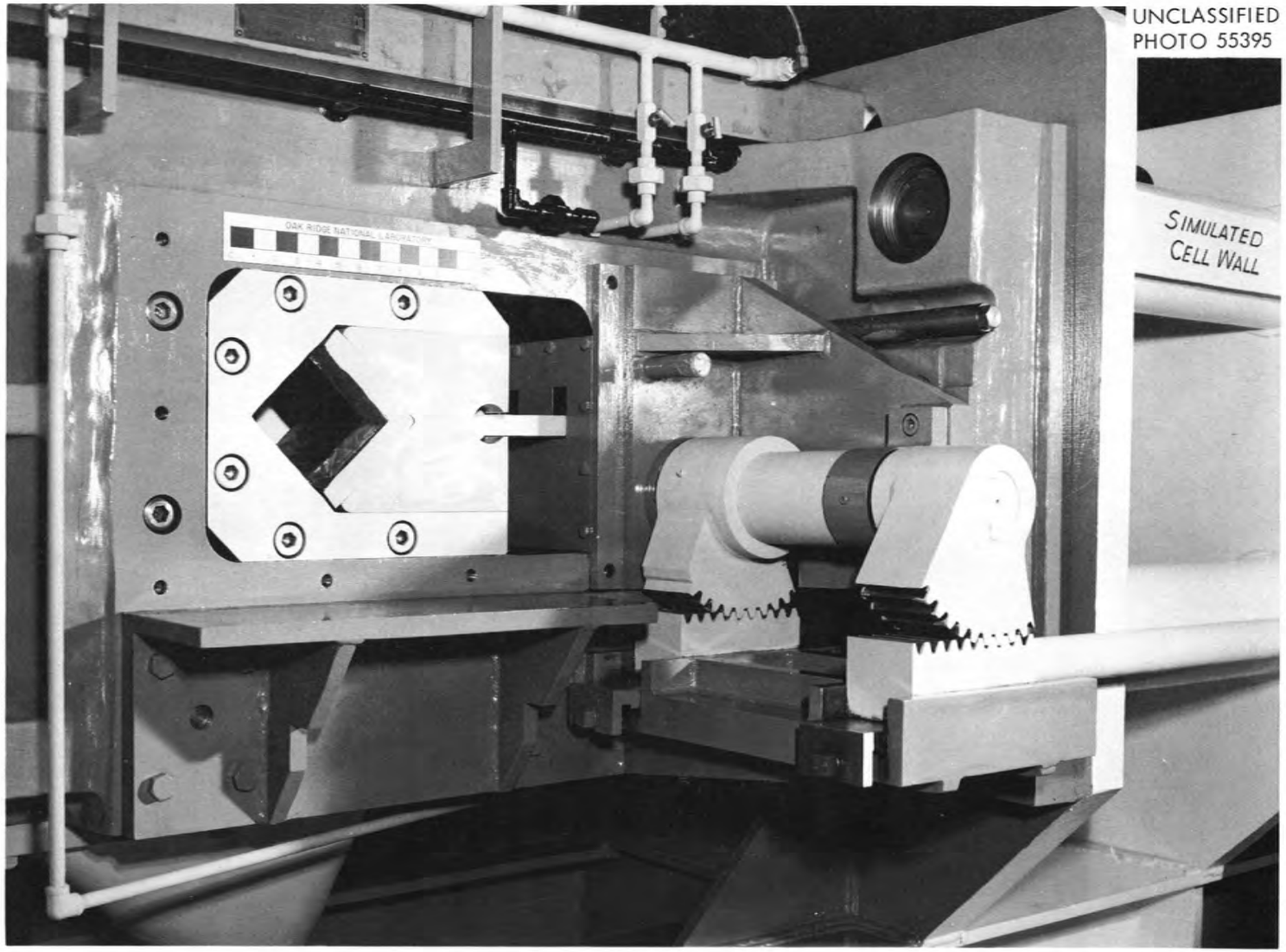

Fig. A-16. View of shear showing gag for holding fuel element.

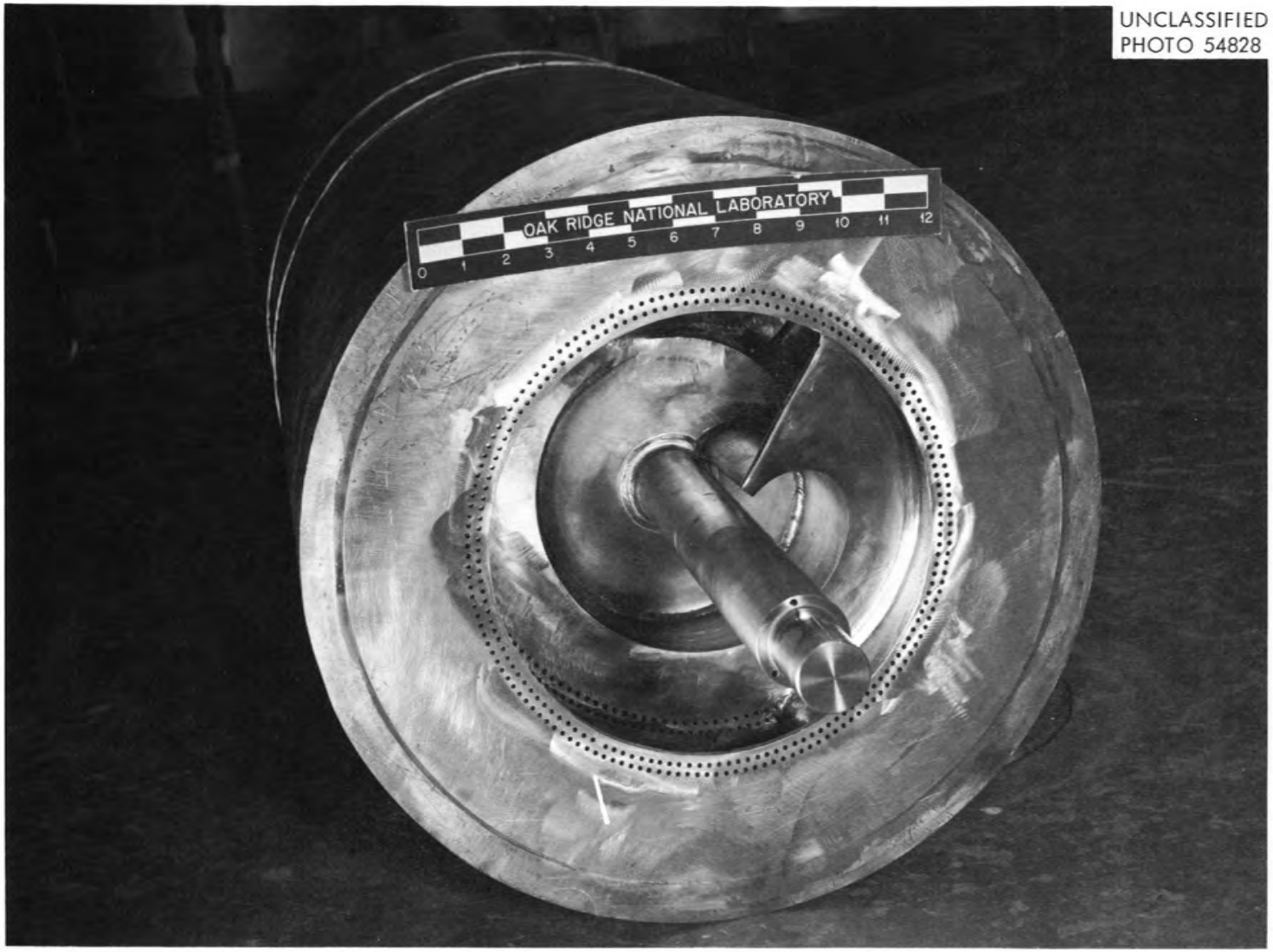

Fig. A-17. Inner drum of leacher.

ORNL-3227
UC-10 — Chemical Separations Processes
for Plutonium and Uranium
TID-4500 (17th ed.)

INTERNAL DISTRIBUTION

1. Biology Library
2-3. Central Research Library
4. Reactor Division Library
5. ORNL — Y-12 Technical Library
Document Reference Section
6-25. Laboratory Records Department
26. Laboratory Records, ORNL R.C.
27. J. B. Adams
28. E. D. Arnold
29. A. M. Benis
30. R. E. Blanco
31. J. O. Blomeke
32. G. E. Boyd
33. J. C. Bresee
34. K. B. Brown
35. F. R. Bruce
36. W. L. Carter
37-38. F. L. Culler
39. D. E. Ferguson
40. L. M. Ferris
41. B. C. Finney
42. J. R. Flanary
43. J. H. Frye, Jr.
44. T. A. Gens
45. J. H. Gillette
46. H. E. Goeller
47. A. T. Gresky
48. W. R. Grimes
49. C. E. Guthrie
50. C. W. Hancher
51. C. S. Harrill
52. A. Hollaender
53. A. S. Householder
54. A. R. Irvine
55. R. G. Jordan (Y-12)
56. W. H. Jordan
57. M. T. Kelley
58. F. G. Kitts
59. E. Lamb
60. J. A. Lane
61. C. E. Larson
62. W. H. Lewis
63. T. A. Lincoln
64. S. C. Lind
65. J. T. Long
66. K. Z. Morgan
67. J. P. Murray (K-25)
68. E. L. Nicholson
69. J. J. Perona
70. D. Phillips
71. A. F. Rupp
72. H. E. Seagren
73. R. W. Schaich
74. W. F. Schaffer, Jr.
75. L. B. Shappert
76. M. J. Skinner
77. W. G. Stockdale
78. J. A. Swartout
79. E. H. Taylor
80. J. W. Ullmann
81. W. E. Unger
82. C. D. Watson
83. A. M. Weinberg
84. M. E. Whatley
85. R. G. Wymer
86. J. W. Youngblood
87. D. L. Katz (consultant)
88. T. H. Pigford (consultant)
89. H. Worthington (consultant)

EXTERNAL DISTRIBUTION

90. C. E. Stevenson, Argonne National Laboratory
91. V. P. Kelly, Hanford Atomic Products Operation
92. O. F. Hill, Hanford Atomic Products Operation
93. R. E. Tomlinson, Hanford Atomic Products Operation
94. L. L. Zahn, Hanford Atomic Products Operation
95. K. Mattern, Atomics International

96. J. A. McBride, Idaho Chemical Processing Plant
97. J. A. Buckham, Idaho Chemical Processing Plant
98. R. Geier, Hanford Atomic Products Operation
99. Division of Research and Development, AEC, ORO
100-607. Given distribution as shown in TID-4500 (17th ed.) under Chemical Separations Processes for Plutonium and Uranium category (75 copies – OTS)