ORNL
MASTER COPY

ORNL-3344
UC-4 — Chemistry
TID-4500 (18th ed.)

FABRICATION AND ASSEMBLY OF A TEFLON DROPPING-MERCURY ELECTRODE

Helen P. Raaen
R. J. Fox
V. E. Walker

OAK RIDGE NATIONAL LABORATORY
operated by
UNION CARBIDE CORPORATION
for the
U.S. ATOMIC ENERGY COMMISSION

Printed in USA. Price: $1.00 Available from the
Office of Technical Services
U. S. Department of Commerce
Washington 25, D. C.

LEGAL NOTICE

This report was prepared as an account of Government sponsored work. Neither the United States, nor the Commission, nor any person acting on behalf of the Commission:

A. Makes any warranty or representation, expressed or implied, with respect to the accuracy, completeness, or usefulness of the information contained in this report, or that the use of any information, apparatus, method, or process disclosed in this report may not infringe privately owned rights; or

B. Assumes any liabilities with respect to the use of, or for damages resulting from the use of any information, apparatus, method, or process disclosed in this report.

As used in the above, "person acting on behalf of the Commission" includes any employee or contractor of the Commission, or employee of such contractor, to the extent that such employee or contractor of the Commission, or employee of such contractor prepares, disseminates, or provides access to, any information pursuant to his employment or contract with the Commission, or his employment with such contractor.

NOV 30 1962

ORNL-3344

FABRICATION AND ASSEMBLY OF A TEFLON DROPPING-MERCURY ELECTRODE

Helen P. Raaen[a]

R. J. Fox[b]

V. E. Walker[c]

Contract No. W-7405-eng-26

[a]Analytical Chemistry Division

[b]Instrumentation and Controls Division

[c]Engineering and Mechanical Division

Date Issued

NOVEMBER 30, 1962

OAK RIDGE NATIONAL LABORATORY
Oak Ridge, Tennessee
operated by
UNION CARBIDE CORPORATION
for the
U.S. ATOMIC ENERGY COMMISSION

CONTENTS

Page

Abstract 1

Introduction 1

Fabrication 2

Teflon-capillary Segment 2

Properties of Teflon 2

Materials and Equipment Required 5

Special Tools Required 5

Procedure 12

Glass-capillary Segment 19

Precision-lapping the Conical End 19

Shaping the Upper End of the Capillary 23

Guide Sleeves 23

Materials Required 23

Preparing the Blanks 23

Machining the Guide Sleeves 24

Attaching the Upper Guide Sleeve to the Glass Capillary . . 24

Assembly 24

Attaching the Glass-capillary Segment to the Standtube 24

Attaching the Teflon-capillary Segment to the Glass-capillary Segment 25

Discussion 28

Acknowledgments. 31

References 33

FABRICATION AND ASSEMBLY OF A TEFLON DROPPING-MERCURY ELECTRODE

Helen P. Raaen, R. J. Fox, and V. E. Walker

ABSTRACT

A procedure was developed for fabricating a Teflon dropping-mercury electrode that has been shown experimentally to be satisfactory for polarography in glass-corroding media. Because of the lack of a suitable electrode, polarography in such media has not been possible heretofore. The electrode consists of a glass-capillary and a Teflon-capillary segment which are attached by guide sleeves to form a unit that behaves as if it were a single segment. Procedures were perfected for precision-lapping a conical end on a glass D.M.E. capillary without plugging the capillary and for fabricating a Teflon segment of specified orifice diameter within a wide range (15 to 110 μ) and to within ±10 μ. The Teflon segment has a round smooth-walled orifice, a lapped face that is perpendicular to the bore, and a bore of diameter and shape that can be varied.

INTRODUCTION

Polarography has not been possible in media that attack glass (e.g., hydrofluoric acid, acid fluoride, and strong caustic solutions) because the glass-capillary dropping-mercury electrode (D.M.E.) is erroded rapidly. The errosion destroys the critical geometry at the capillary orifice and introduces contaminants into the test solution. The fabrication of a

Teflon D.M.E. that has essentially the same geometric and performance characteristics as a glass-capillary D.M.E. is described herein. The major problem was to obtain in Teflon a round, smooth-walled orifice surrounded by a flat surface and having a diameter in the range from 15 to 110 μ. The fabrication procedure developed may also be useful in other applications of Teflon that require the formation of such a small orifice.

The Teflon D.M.E. is of particular interest to analytical chemists because the lack of it has been the deterrent to polarographic studies of redox systems in glass-corroding media. The evaluation of the Teflon D.M.E. for use in such work and the attempts by others to fabricate such an electrode are discussed elsewhere.[5]

FABRICATION

The design of the Teflon D.M.E. is shown in Fig. 1. The electrode consists of a Teflon-capillary segment, a glass-capillary segment, and guide sleeves that are used to hold the two segments together in proper alignment. When the segments are attached, mercury flows through the electrode in an unbroken thread as if the capillary were a single unit.

Several unique tools were designed and made for use in fabricating the Teflon D.M.E.; these are described.

Teflon-capillary Segment

Properties of Teflon

Teflon is fraught with properties that were either conceded to or exploited in the fabrication of the capillary segment. Transition points of Teflon exist at 20, 30, and 327°C; [1,2,3,9] the latter is the

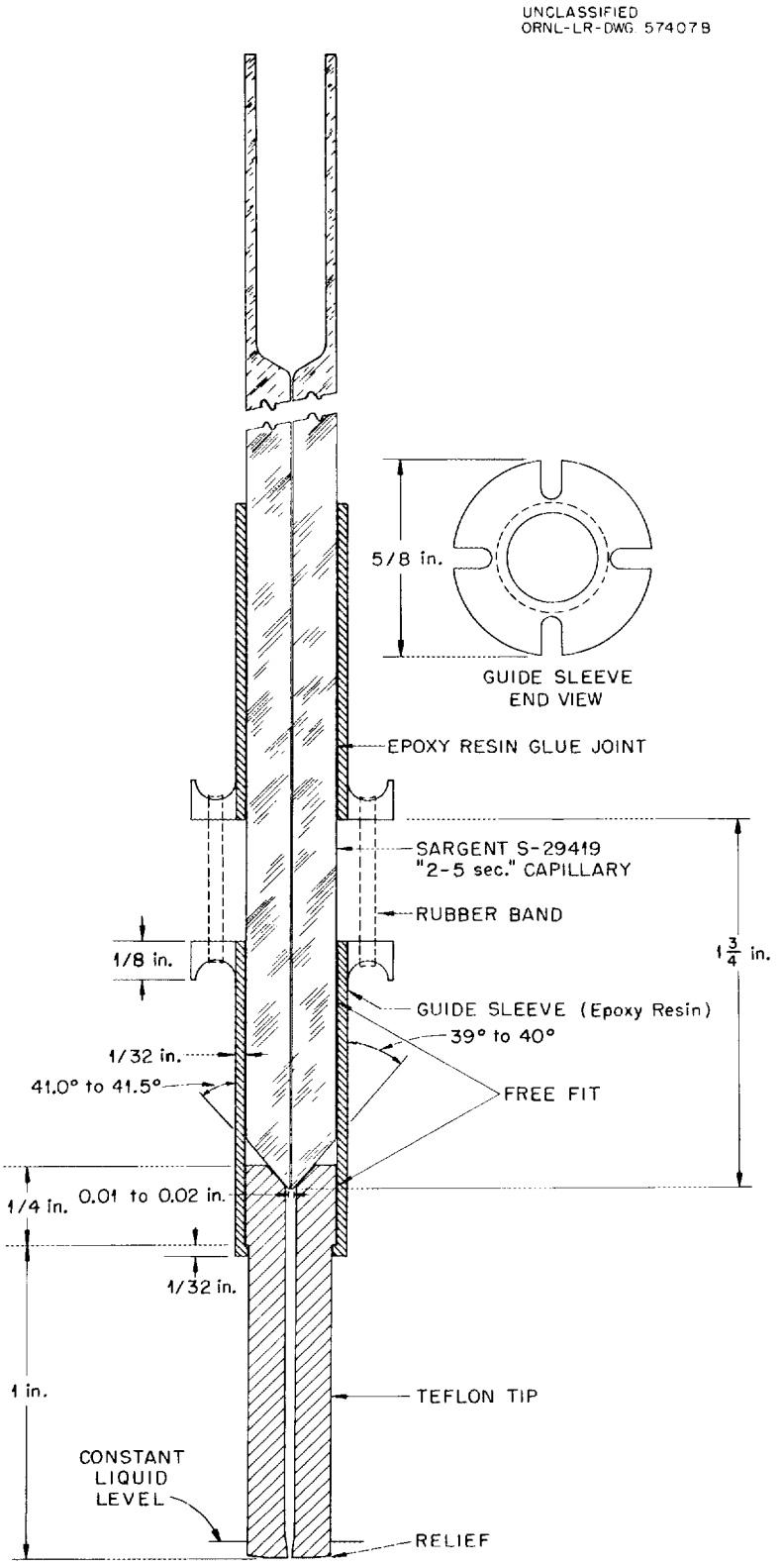

Fig. 1. Sketch of the Teflon Dropping-mercury Electrode. (Reproduced with permission from Analytical Chemistry)

gel point. Teflon cannot be cast from a melt or drawn. It decomposes above 380°C[8] and emits toxic compounds.[4] The rod form purchased from vendors is molded from the powder. In the rod form, it contains voids and stresses and therefore may not be of uniform density. The structural irregularity of unannealed Teflon and the resultant difficulty in obtaining a small round orifice in it are shown by the photomicrograph which is Fig. 2. Material that is not designated 100% virgin Teflon may contain additives and re-used Teflon. A special-purpose ultra-fine molding powder, designated Teflon-7, is now available for use in making highest quality void-free moldings.[7] Teflon has "elastic memory," which affects its

Fig. 2. Shadow-cast Negative Faxfilm Replica of Surface of Unannealed Teflon Rod. 300X magnification; shadowcast with aluminum.

dimensional stability, particularly if stresses introduced into it during fabrication are not removed by annealing. The possiblity of dimensional change in a piece of Teflon rod that was not annealed after a hole was pierced in it is shown by Fig. 3. The striations in the photomicrograph are the marks left by a cutting edge used to segment the rod before the hole was pierced.

When Teflon is being machined, turning, chips, and granules accumulate and adhere to the stock piece by electrostatic attraction. Before a finished capillary is put into use, it must be inspected carefully under an optical microscope to ensure that no particles are adhering to it. A brochure[6] is available that is most helpful in the machining of Teflon.

Materials and Equipment Required

The following special materials and equipment are required:

1. Teflon, 100% virgin, 1/2-in. and 1-in. diameter rods. From a needed 6-in. length of the 1/2-in. rod, three capillaries can be made. The 1-in. rod is needed for making a lapping jig. Rod obtained from Tri-Point Plastics, Inc., Albertson, N. Y., and designated TSI grade was satisfactory.

2. Brass Tube, 5/8-in. ID, 11/16-in. OD. A 6-in. length is needed.

3. Brass Rod, 1-in. diameter; for use in making the machining jig.

4. Oven, capable of maintaining a temperature of 360 ± 5°C for about 1 1/2 hours and provided with automatic temperature control.

5. Aluminum Oxide Powder, grit No. 600.

6. Benzene.

Special Tools Required

The following special tools are required. They were designed for specific use in fabricating the Teflon-capillary segment. These tools

UNCLASSIFIED
M-2826

A

UNCLASSIFIED
M-3298

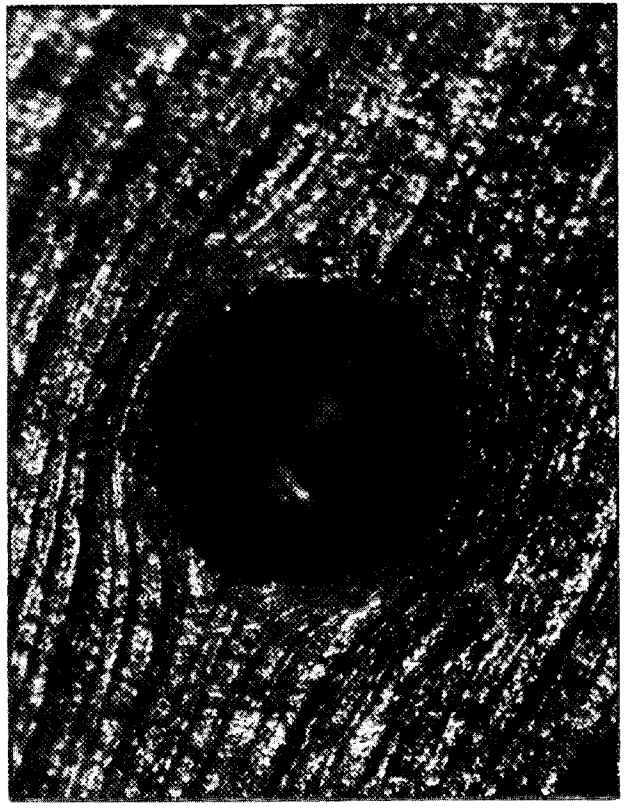

B

Fig. 3. Photomicrograph of Hole in Unannealed Teflon Rod. 300X magnification.

A. Immediately after formation.
B. One year later.

are not available commercially; they were made according to the procedures described below.

1. Machining Jig of Brass plus a Teflon Push Rod (see Fig. 4). The jig is for use in machining the blank for the Teflon-capillary segment in such a way as to ensure that the capillary face is perpendicular to the axis of the capillary and is free of the type of projection that would result from on-center machining. The push rod is used to remove the capillary blank from the machining jig with a minimum of scarring of the orifice face of the blank.

a. From 1-in. diameter brass rod, fabricate a cylindrical jig having an eccentric bore of 0.244-in. diameter; follow the dimensions specified in Fig. 4.

b. From unannealed 1/2-in. diameter, 100% virgin Teflon rod, fabricate a push rod; follow the dimensions specified in Fig. 4.

2. Lapping Jig of Teflon (see Fig. 5); for use in polishing the orifice face of the Teflon segment to a lapped finish.

a. From 1 1/4-in. diameter, unannealed, 100% virgin Teflon rod, fabricate a lapping jig of the dimensions indicated in Fig. 5. Note particularly the geometry of the end of the jig that will touch the lap.

3. Lap; for lapping the finish on the orifice face of the Teflon capillary blank.

a. Prepare a lap from about a 4 x 4 in. piece of about 1/4-in. thick plate glass by finishing the surface of the plate glass with No. 600 grit aluminum oxide powder (<u>do not use silicon carbide</u>).

b. Wash the aluminum oxide powder off the lap with water.

UNCLASSIFIED
ORNL-LR-DWG. 70483

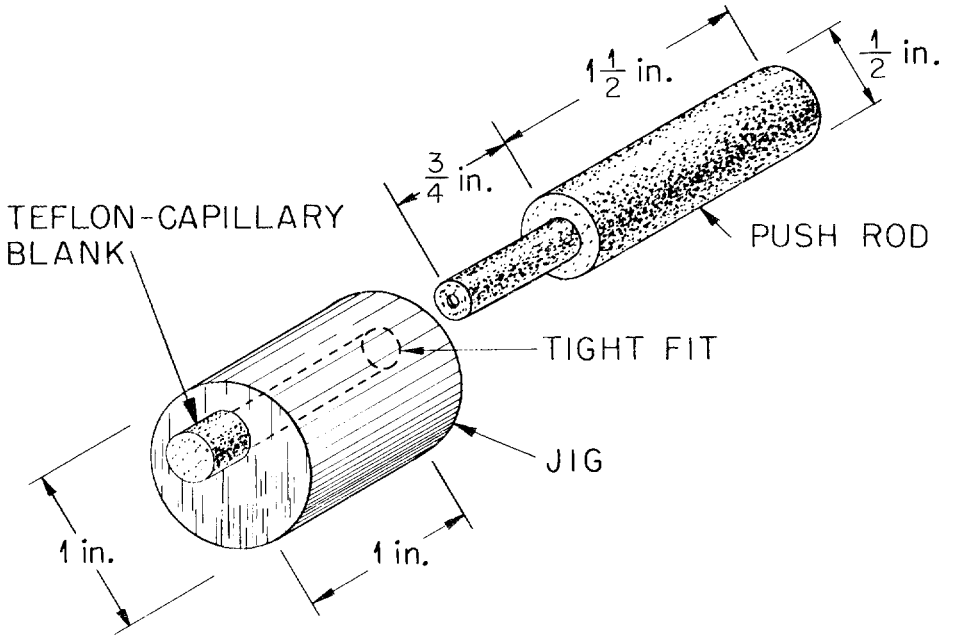

Fig. 4. Machining Jig of Brass with Teflon Push Rod.

UNCLASSIFIED
ORNL-LR-DWG. 70482

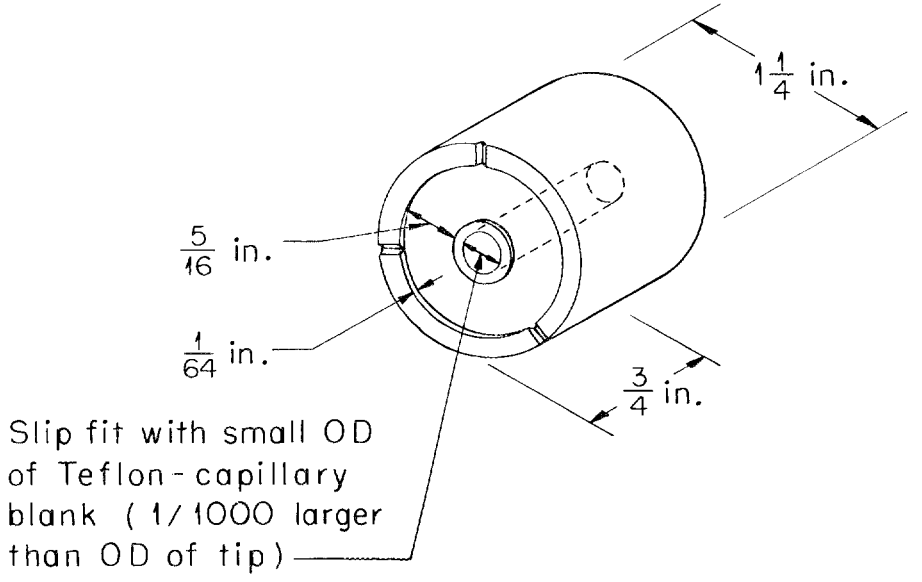

Fig. 5. Lapping Jig of Teflon.

c. Clean the surface of the lap with benzene. (No lapping compound is used when the Teflon blank is lapped (or burnished) against the glass lap.)

4. Piercing Needle, precision-lapped; for use in forming simultaneously the orifice and the bore of the Teflon-capillary segment. A sharp conical end is handlapped on a piece of high-speed-steel measuring wire. The angle of the cone is determined partly from the desired diameter of the orifice.

a. Special Materials and Equipment Needed

(1.) Measuring Wire, high-speed-steel, 1 3/8-in. lengths, 0.032-in. maximum diameter; available from Taft-Peirce Manufacturing Co., Woonsocket, R. I.

(2.) Oilite Bushing Stock; self-lubricating, a piece about 1 x 1/4 x 3/16 in.

(3.) Carborundum Hones; for rough honing and polishing.

(4.) Diamond Compound, No. 1 grade, Elgin.

(5.) Jeweler's Lathe.

(6.) Optical Comparator, Model BC-4, Jones & Lamson Machine Co., Springfield, Vt.; or equivalent.

(7.) Microscope.

(8.) Brass; small flat piece.

b. Precision-lapping Procedure. The arrangement of jeweler's lathe, bushing stock, microscope, and needle blank used in precision-lapping the piercing needle is shown in Fig. 6.

(1.) Place a piece of Oilite bushing stock (approximately 1 x 1/4 x 3/16 in.) in the tool post of a jeweler's lathe.

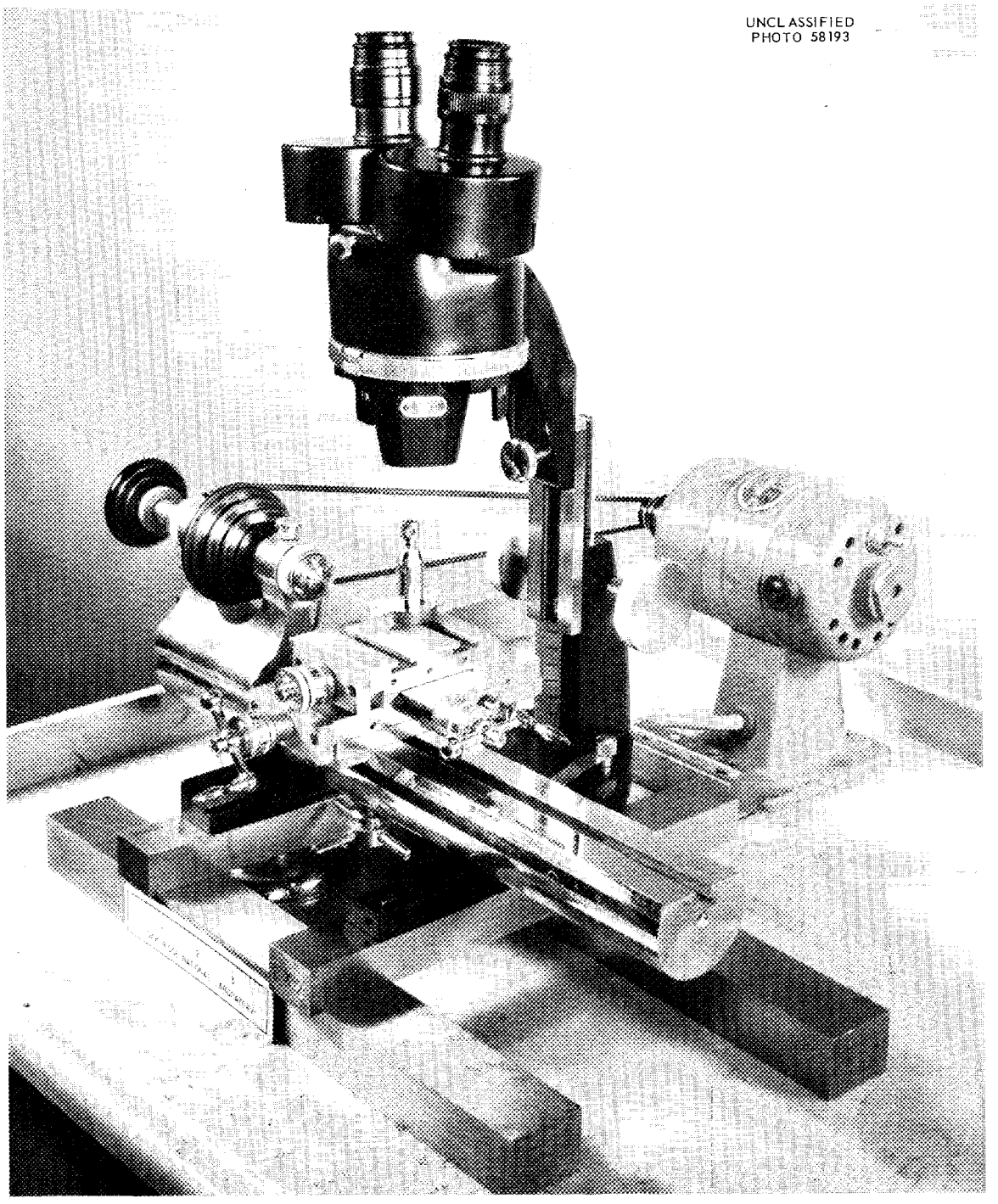

Fig. 6. Arrangement of Equipment and Needle Blank Used in Precision-lapping the Piercing Needle.

(2.) In the collet of the jeweler's lathe, place a drill of the same OD as the OD of the measuring-wire blank for the piercing needle (i.e., 0.032 in.).

(3.) Drill a hole through the bushing stock. (The bushing stock so drilled and in this position acts as a "steady rest" for the needle blank.)

(4.) Replace the drill with the needle blank. Set the blank in the lathe so that only about 1/8 in. of it is held in the collet and the tip of it protrudes beyond the face of the bushing for a length that is the length desired for the conical tip of the piercing needle. (It is essential that the needle run tightly in the steady rest. To compensate for wear in the Oilite stock, move the cross-feed of the lathe slightly.)

(5.) Observing the protruding tip by means of a microscope at approximately 30X, rough the tip down to a cone point with carborundum hones as the blank turns in the lathe. In order to maintain the roundness of the cone point during the honing, support the hone rigidly against any convenient surface; the base for the Oilite bearing is a suitable surface.

(6.) Polish the needle to a high polish with finer hones. The cross-section of the cone must be round at every plane along it.

(7.) Finish polish the needle with No. 1 grade Elgin diamond compound; use a flat piece of brass as a lap. (Needles of 15 and 20° included angles were used to form orifices of 20-μ and smaller diameters and of 40- to 110-μ diameters, respectively.)

(8.) By means of an optical comparator, measure the

included angle of the lapped cone (a) and the diameter of the point of the cone (d_2).

5. Piercing Jig and Appurtenances; for use in forming simultaneously the bore and orifice of the Teflon-capillary segment. The arrangement of the piercing jig, needle, and capillary blank is shown in Fig. 7. The jig assembly and appurtenances consist of the following:

a. Jig; fabricated to the dimensions shown in Fig. 7 and provided, as shown, with: (1) a No. 10-32 screw that has an inset at the lower end and a head that contains seats for a small allen wrench to be used in turning the screw in very small increments, and (2) a post on which an indicator can be mounted.

Construct the jig from Star-Zenith high-speed steel, available from The Carpenter Steel Co., Reading, Pa. The linear expansion of this steel and that of the steel from which the needle is made are essentially the same; the matching of the steels with respect to this property is essential.

b. Indicator, Starrett No. 711-F, 0.001 in., "Last Word" (available from L. S. Starrett Co., Athol, Mass.); for use in measuring the distance of penetration of the piercing needle.

c. Volt-ohmmeter; for detecting when the piercing needle has just penetrated the face of the Teflon-capillary blank.

d. Mica Sheet, 1 x 1/2 x 0.0025 in.

e. Aluminum Sheet, 1 x 1/2 x 0.0025 in.

Procedure

Annealing the Teflon Rod

1. Cut a piece of 1/2-in. diameter, 100% virgin Teflon rod into 6-in. lengths.

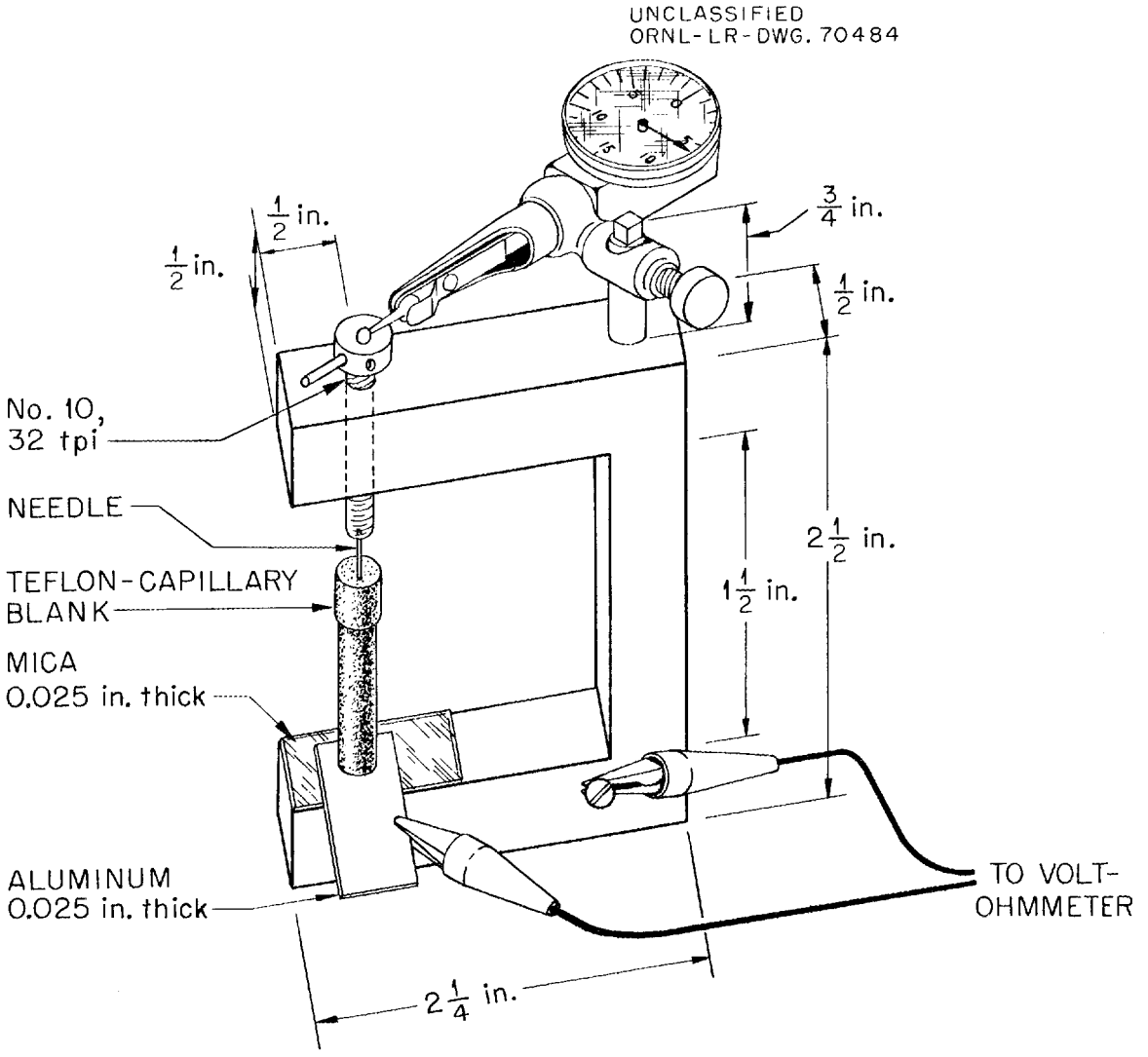

Fig. 7. Piercing Jig and Appurtenances.

2. Place a length of rod in a 6-in. length of 5/8 in.-ID brass tubing.

3. Place the tubing that contains the Teflon rod in an oven at room temperature; use an oven having automatic temperature control.

4. Increase the temperature of the oven to 360 ± 5°C.

5. Allow the Teflon to remain in the oven at 360 ± 5°C for at least 1 1/2 hr.

6. Turn the oven off and allow the oven to cool to room temperature before opening it.

7. Remove the Teflon rod from the cool oven.

Teflon rod often "bows" during annealing; the brass tube is used to minimize this bowing by providing an even distribution of heat around the rod. A piece that is bowed after being annealed should not be used to fabricate a capillary. A bowed piece will fracture if attempt is made to straighten it by force.

Machining the Blank for the Capillary

1. Place the 6-in. length of annealed Teflon rod in a 1/2-in. collet of a lathe; allow about 1 1/2 in. of the rod to protrude. Cut off a 1/8 in. length from the end of the protruding rod before beginning the fabrication of the first capillary.

2. Machine from the rod a blank having the external dimensions indicated in Fig. 1; proceed as follows:

a. Machine down the smallest-diameter (0.245-in.) length (i.e., the 1-in. length up to the shoulder); machine this part to be very slightly longer (0.005 in.) than 1 in.

b. Machine down the length (i.e., 1/4-in. long shoulder) of the largest diameter (i.e., same diameter as that of the glass capillary).

c. Cut off the blank to leave a 1/4-in. long shoulder.

3. Place the blank in the brass machining jig (Fig. 4). The fit should be a press fit (small diameter of blank, 0.245 in.; diameter of jig bore, 0.244 in.). Place the jig in the collet of a lathe and machine the smaller end off flat by means of an extremely sharp tool.

4. Remove the blank from the jig by means of the Teflon push rod of design shown in Fig. 4.

5. Chuck the capillary blank in a 1/4-in. diameter collet, inserting the capillary blank into the collet from the back side of the collet.

6. Place the collet in the lathe and round off the very edge of the capillary blank with a radius tool, leaving a flat of at least 1/8-in. diameter in the center of the face.

7. Remove the collet from the lathe and the capillary blank from the collet.

8. Now place the small end of the blank in the 1/4-in. collet of the lathe. Into the larger end of the blank, machine a conical well of the dimensions shown in Fig. 1, leaving a narrow flat surface (as indicated) rather than a sharp edge on the rim of the cone.

9. By means of a No. 71 drill (0.026-in. diameter) placed in the lathe, drill a hole from the conical end to a depth of 1 in. (i.e., to within 1/4 in. from the small end of the blank) that is about 0.006 in. smaller in diameter than the diameter of the shaft of the piercing needle (i.e., 0.032 in.)

Lapping the Orifice Face of the Capillary Blank

1. Place the capillary blank in the Teflon lapping jig with the orifice face (i.e., smaller, flat face) against the lap.

2. Lap the face of the capillary blank against the dry glass lap; do not use lapping compound. Lap with a figure-8 motion by hand for about 3 minutes. Clean the lap surface often with benzene during the lapping.

Piercing the Blank

1. Select the precision-lapped piercing needle according to the orifice diameter desired in the capillary.

2. Push the piercing needle into the drilled hole in the capillary blank; keep the needle on center with the hole and push it in only as far as the bottom of the drilled hole.

3. Place the piercing jig in a bench vise.

4. Assemble the jig, mica sheet, aluminum sheet, indicator, volt-ohmmeter, and capillary blank as indicated in Fig. 7.

5. Connect one of the leads from the volt-ohmmeter to the jig and the other to the aluminum sheet (the mica breaks the circuit).

6. By means of an allen wrench, slowly and carefully turn the screw until the needle just makes contact with the aluminum foil; this is indicated by motion of the indicator needle of the volt-ohmmeter.

7. With the arm of the indicator touching the top of the screw, zero the indicator.

8. Calculate the length of penetration required to produce an orifice of the desired diameter; use the following relationships:

UNCLASSIFIED
ORNL-LR-DWG. 70481

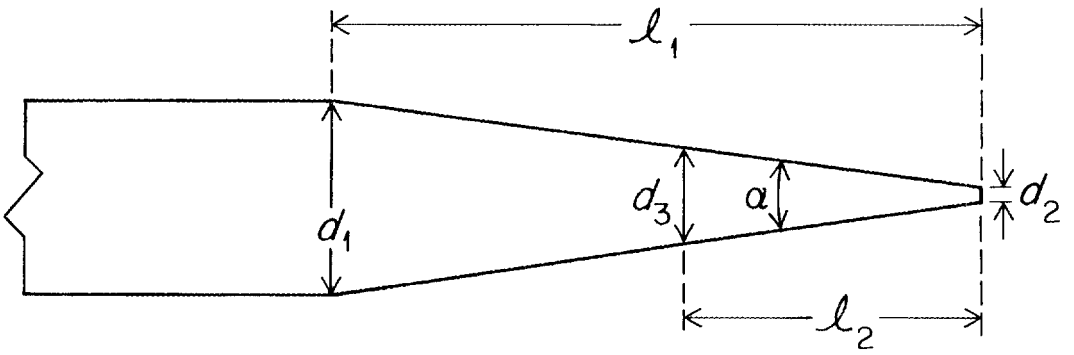

d_1 = diameter of needle shaft, mil,

l_1 = length of cone, mil,

a = included angle of cone, deg,

d_2 = diameter of point of cone, mil,

d_3 = desired orifice diameter, mil,

l_2 = depth of penetration to give d_3, mil

$= [1/2(d_3 - d_2)][\cot(a/2)]$,

r = constant retraction of Teflon tip upward onto the needle during annealing in jig = 3 mil, and

l_3 = net depth of penetration corrected for retraction of Teflon tip, mil = $l_2 - r$.

If l_3 is negative (case of small-diameter orifices), the screw must be screwed back the negative amount.

9. By observing the indicator and by slowly and carefully turning the screw the distance l_3 (either backward if l_3 is negative, or forward if l_3 is positive) cause the capillary face to be pierced to the necessary depth of penetration.

10. Disconnect the leads to the volt-ohmmeter.

11. Remove the indicator from the jig.

12. Remove the jig from the vise.

Annealing the Capillary

1. Place the entire jig assembly in an oven at room temperature; use an oven that has automatic temperature control.

2. Increase the temperature of the oven slowly (over a period of 2 to 3 hr) to a maximum temperature of 160 to 200°C.

3. Allow the assembly to remain in the oven at 160 to 200°C for about 3 hr.

4. Turn the oven off and allow it to cool to room temperature without opening it.

5. Remove the assembly from the cool oven.

6. Remove the capillary from the jig.

Removing the Needle from the Capillary

1. Clean the surface of the capillary around the point of the needle with the edge of a piece of paper.

2. Clamp the protruding shaft of the needle in a vise and pull the capillary off the needle; pull in a line that is parallel to the axis of the needle. Do not touch the orifice face of the capillary.

Inspecting the Capillary

1. Inspect the capillary, particularly the orifice and orifice face, to determine that there are no flaws in it.

To inspect the capillary for loose particles, burrs, hairs, etc., that may result from the fabrication, use an optical microscope at about 100X magnification.

Determine that the orifice and capillary face surrounding it have satisfactory geometry by having a photomicrograph of the orifice made at 300X magnification.

Glass-capillary Segment

Precision-lapping the Conical End

Materials and Equipment Required

1. Glass Capillary, Sargent S-29419 "2-5 sec"; available from E. H. Sargent & Co., Chicago, Ill. (or one of smaller bore).

2. Lapping Compounds

   a. Silicon carbide, grits Nos. 120 and 400.

   b. Aluminum oxide, grit No. 600.

   c. Cerium oxide.

3. Beeswax.

4. Jeweler's Eye Loop, 5X.

5. Bokum Holder, model TB-0.

6. Ruler, graduated to 1/64 in.

7. Benzene.

8. Spoon.

Special Tools Required

1. Brass Laps, of the dimensions shown in Fig. 8; for use in

UNCLASSIFIED
ORNL-LR-DWG. 65335

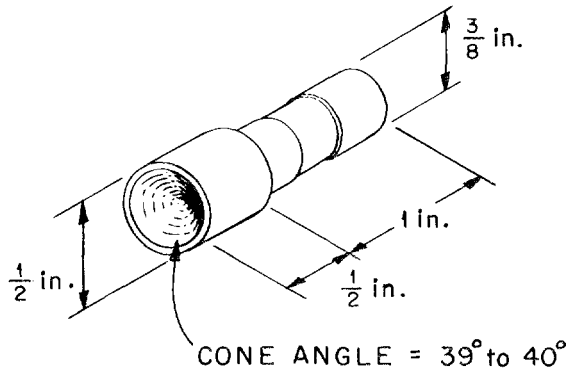

Fig. 8. Brass Lap for Lapping Conical End on Glass Capillary.

lapping the conical end on the glass capillary. Three are needed, one for use with each type of lapping compound. These are not available commercially.

Procedure

1. Check the bore of the glass dropping-mercury-electrode capillary for cleanliness and dryness (see DISCUSSION section, pp. 32–33).

2. Melt beeswax in a small container on a hot plate.

3. Dip the end of the capillary that is to be lapped into the melted beeswax to a depth of ~ 1/16 in. (capillary action will pull beeswax up into capillary to a distance of ~ 3/32 in.)

4. Wipe the excess beeswax off the end of the capillary with a cleansing tissue.

5. Clamp a Bokum holder (model TB-0) in the tool post of the lathe and center the Bokum holder by means of a dowel pin chucked in the collet of the lathe.

6. Insert one of the lapping tools in the Bokum holder but do not clamp it in the holder.

7. Remove the dowel pin from the collet.

8. Chuck the capillary in the collet of the lathe (the inside diameter of the collet should be greater than the outside diameter of the capillary). Wrap the surface of the capillary that touches the collet with paper. Allow a 1-in. length of capillary to protrude from the collet.

9. Center the orifice of the capillary with respect to the spindle of the lathe by shimming with paper around the capillary. (A 5X jeweler's eye loop and a ruler graduated to 1/64 in. are useful in observing the orifice. The shimming causes the outside of the capillary to travel eccentrically, but the orifice will travel true with the spindle of the lathe. This centering is necessary because the bore of the capillary is usually not in the center of the capillary tube.)

10. Move the cross-feed of the lathe so that the position of the capillary with respect to the lapping tool is as shown in Fig. 9.

UNCLASSIFIED
ORNL-LR-DWG. 65334

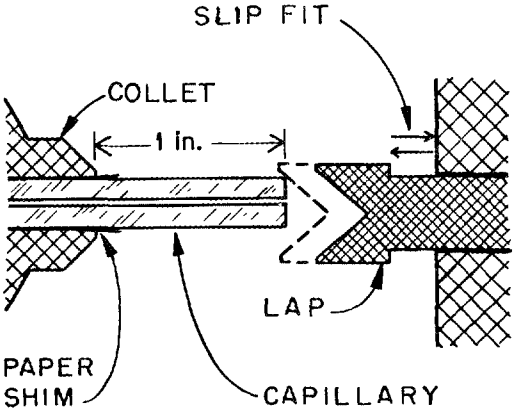

Fig. 9. Glass Capillary and Lap Assembled in Lathe.

11. Make a water slurry of grit No. 120 silicon carbide; feed the slurry into the cone of the lapping tool (a spoon is useful).

12. Turn on the lathe; move the lapping tool toward the capillary until the tool just touches the rim of the capillary. By manually moving the lapping tool back and forth (the lapping tool will slide back and forth in the Bokum holder), lap the capillary until the diameter of the face of the end of the capillary is reduced to 1/16 in. During this phase of the lapping, rotate the lapping tool by hand as the surface of it becomes worn. Take caution never to let the center of the capillary touch the apex of the cone of the lapping tool because the lapping compound would thus be forced into the bore of the capillary.

13. Remove the lapping tool from the Bokum holder; clean the abrasive off the capillary and the Bokum holder (a wet cheese cloth can be used).

14. Insert a new lapping tool in the Bokum holder.

15. Make a water slurry of grit No. 400 silicon carbide. Proceed again as instructed in Steps 11 and 12, this time to reduce the diameter of the face of the capillary to 1/32 in.

16. Remove the lapping tool; clean the capillary and Bokum holder as before.

17. Insert a new lapping tool in the Bokum holder.

18. Use a water slurry of grit No. 600 aluminum oxide to finish lap the cone of the capillary. Lap for a short time (~ 5 minutes) with the lapping tool inserted in the Bokum holder. Remove the tool from the Bokum holder. Holding the tool in the hand, finish lap the conical end of the capillary until the diameter of the face is 0.015 in.

19. Polish the cone of the capillary by holding a wad of beeswax against it as it turns in the lathe and by using a water slurry of cerium

oxide as the polishing agent.

20. Turn off the lathe, remove the capillary, and suspend the capillary in benzene in such a way that the conical end is immersed to a depth of about 1 in. Allow the capillary to remain in the benzene until the beeswax is dissolved out. Rinse the capillary thoroughly with benzene. Check the capillary microscopically to determine that it is free of beeswax.

Shaping the Upper End of the Capillary

1. After the conical end is precision-lapped on the glass capillary, have a glassblower blow out the other end to form a funnel-shaped entry into the capillary and seal onto that end a short length (~ 1 in.) of wide-bore glass tubing of the same OD as the glass capillary (see Fig. 1).

Guide Sleeves

Materials Required

1. Araldite Epoxy Resin (Ciba CN502) and its Catalyst (Ciba HN951); available from Ciba Company, Inc., New York.

2. Polyethylene Bottles, of 1/4-in. larger ID than the OD of the blanks desired.

Preparing the Blanks

Two blanks are required.

1. Cut off the top of a suitable polyethylene bottle, leaving a length slightly longer than the desired length of the blank.

2. Weigh the bottle.

3. Add Araldite resin to the bottle and determine the weight of the resin by difference.

4. Add 1 part by weight of catalyst to 10 parts of resin, mix the resin and catalyst thoroughly, and place the polyethylene container in a

water bath.

5. Allow the mixture to set for at least 10 hr to ensure proper curing.

6. When the resin has cured, remove the blank from the polyethylene container by slitting the container down the side.

Machining the Guide Sleeves

1. Machine from the resin blanks the two guide sleeves for the electrode according to the dimensions specified in Fig. 1.

Attaching the Upper Guide Sleeve to the Glass Capillary

1. Attach the upper guide sleeve to the modified glass capillary at the position indicated in Fig. 1. Use incompletely cured Araldite epoxy resin to glue the guide sleeve to the capillary; cure the resin glue as instructed for the preparation of the blank.

ASSEMBLY

The assembly of the Teflon dropping-mercury electrode consists in first attaching the glass-capillary segment to the standtube, obtaining a satisfactory flow of mercury through the glass capillary, and then attaching the Teflon-capillary segment to the glass-capillary segment. The attachment of the two segments is made at some instant during the growth of a drop of mercury of relatively long drop time, t, in order to avoid entrapment of air in the capillary segments. The procedures follow.

Attaching the Glass-capillary Segment to the Standtube

1. Attach the glass-capillary segment to the empty standtube by means of a piece of Tygon tubing that has been washed and heat-polished, as described below, to free it of burrs and shreds.

2. Fill the glass-capillary segment and the standtube with mercury

in the usual manner.

3. Check the performance of the glass-capillary segment to ensure that it is satisfactory.

Attaching the Teflon-capillary Segment to the Glass-capillary Segment

1. Prepare a section of Tygon tubing (to be used in filling the Teflon segment with mercury) as follows:

a. Cut off sharply a 1 1/2- to 2-in. length of 1/4-in. ID Tygon tubing.

b. Rinse the length of tubing in a stream of running water while rubbing the inside wall against itself to dislodge any shreds of Tygon that might be inside the tubing.

c. Dry the tubing.

d. Heat polish each end by holding the end over a hot plate (usually at maximum setting) until the cut surface just begins to flow.

e. Examine the tubing under a microscope (30X magnification is satisfactory) and determine that no burrs or loose particles of Tygon are adhering to it. If there are some, remove them with a camel's-hair brush or by another rinsing in a stream of water.

f. Rinse the tubing finally with water and then with acetone; allow it to dry in air.

g. Set it aside in a dust- and lint-free place until it is needed.

2. Clean and inspect the Teflon segment as follows (use great care not to mar the orifice end of the tip):

a. By means of gentle vacuum, and with the wide end of the segment attached to thoroughly cleaned rubber tubing, draw the following

liquids, in turn, up thru the segment: conc. HNO_3, distilled water, ethyl alcohol, and acetone. Draw air through the segment until it is dry.

b. Inspect the segment carefully under a microscope (30X magnification is satisfactory) to determine whether any shreds or burrs of Teflon are present; inspect both the inner and outer surfaces. If any are present, remove them without scarring the segment.

c. Reclean and reinspect the segment, if necessary. Avoid handling the segment directly with the fingers; otherwise, a film of oil will be deposited on it that will later be transferred to the mercury used to fill the segment.

d. Set aside the segment in a dust- and lint-free place until it is needed.

3. Clean and inspect the adapter (that is to hold the segment) as follows:

a. Rinse the adapter inside and out with distilled water, ethyl alcohol, and acetone in that order.

b. Allow it to air dry.

c. Inspect it under the microscope (30X magnification is satisfactory) for loose particles. If any are present, rinse the adapter in a stream of water using a camel's-hair brush at the same time to loosen the particles.

d. Dry the adapter; reinspect it. Reclean and reinspect it, if necessary.

e. Set it aside (an inverted powder funnel of 1/2-in. diameter small opening is a convenient stand to hold the adapter, especially when the Teflon segment is being placed in it).

4. Clean a weighing bottle (S 14/10, tall-form, 2-in. long, 5/8-in. diameter) by rinsing it with the following liquids in the order given: conc. HNO_3, distilled water, ethyl alcohol, and acetone. Air dry the weighing bottle and then fill it about half full with triple-distilled mercury (same grade that is used in the standtube) that has been passed through a filter (gold-adhesion type).

5. Fill the Teflon segment with mercury and seat it in the adapter as follows:

a. Attach the Teflon segment to the Tygon tubing (prepared as described in Step 1 above); attach the tubing to the widest end of the segment and allow it to extend onto the segment to a length that is about half the length of the shoulder on the segment.

b. Immerse the Teflon segment (orifice end down) into the mercury in the weighing bottle; immerse it to a depth that is about half the length of the segment.

c. Apply very gentle vacuum to the unattached end of the Tygon tubing.

d. Pull mercury up through the segment and into the Tygon tubing to a level of about 3/8 in. above the top of the segment.

e. Still keeping the segment under the surface of the mercury, release the vacuum slowly from the unattached end of the tubing; leave the other end of the tubing attached to the segment.

f. With the Tygon tubing still attached to the Teflon segment, remove the segment from the mercury and insert it in the adapter so that the bottom edge of the Tygon tubing rests on the top of the adapter.

g. Ease the tubing off the segment, while keeping the tubing

against the top of the adapter, in such a way that the segment and the mercury pool above it fall intact down into the adapter.

6. Attach the adapter, segment, and mercury to the glass-capillary segment as follows:

a. Set the level of mercury in the standtube to the lowest position.

b. Just after a drop of mercury begins to form at the face of the glass capillary, raise the adapter—Teflon segment—mercury assembly up under the glass capillary in order to seat the Teflon segment against the end of the glass capillary.

c. Fix the adapter, and thereby the Teflon segment, into position by lacing a rubber band (1-in. length) between the adapter for the Teflon segment and the adapter that is glued to the glass capillary. Mercury should now drop uniformly from the Teflon segment.

d. Do not close off the capillary assembly from the standtube; allow mercury to flow continuously through the D.M.E.

DISCUSSION

The fabrication procedure described was used to make a set of seven Teflon D.M.E.s to specified orifice diameters in the range from 15 to 110 μ; four of these were two sets of duplicates. The diameters were achieved to within ±10 μ of those desired. The satisfactory degree of perfection of the geometry at the orifice is indicated by Fig. 10 in which photomicrographs of the orifices of the 20- and 109-μ diameter capillaries are compared with that of a 70-μ diameter "2-5 sec" Sargent glass capillary. The satisfactory performance of Teflon D.M.E.s for polarographic work was proved experimentally. The results and the significance of the development of the Teflon D.M.E. are discussed in detail elsewhere.[5]

UNCLASSIFIED
ORNL PHOTO 58528 A

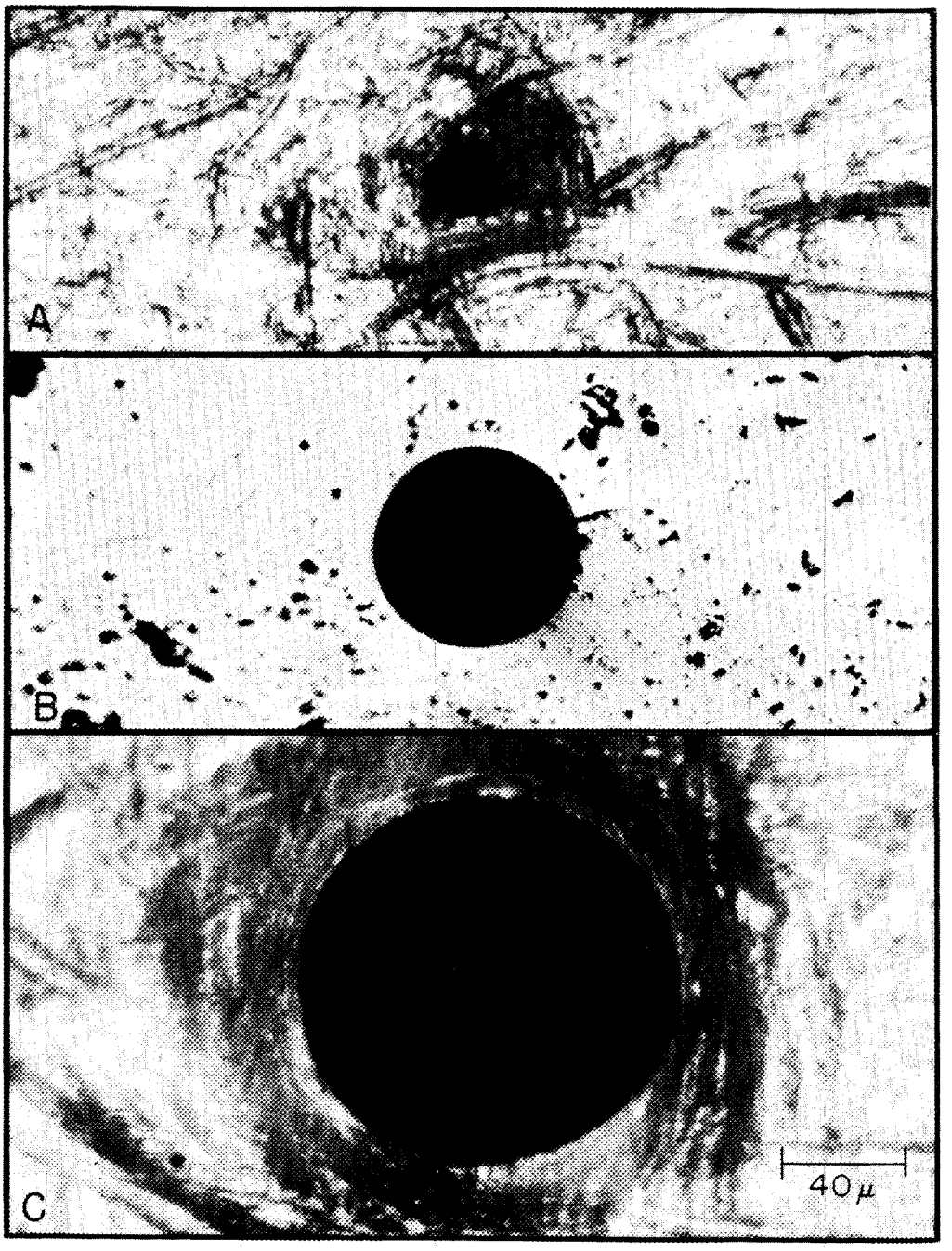

Fig. 10. Comparison of the Orifices of Teflon D.M.E. Capillaries with that of a Glass D.M.E. Capillary. (Reproduced with permission from Analytical Chemistry)

A. 20-μ Teflon
B. 70-μ Glass
C. 109-μ Teflon

The Teflon-capillary segments can be fabricated satisfactorily only if careful attention is given to the details of the procedure. Otherwise, the orifice will not be round and the Teflon immediately surrounding it may be either indented or projected; these are geometric conditions that are not acceptable for polarography. Optical microscopy at high magnification (about 300X) is an invaluable tool for determining the degree of perfection achieved in the fabrication of a Teflon-capillary segment; it was used extensively in this work.

The piercing of the face of the capillary by the needle occurs as a result of both the mechanical force that is applied to the needle by means of the screw and the retraction of the Teflon up onto the needle during the annealing of the capillary. The distance of retraction was constant within the annealing conditions specified. It was not determined for more than the one type of Teflon used. If a capillary of very small orifice diameter (*i.e.*, less than 20μ) is desired, the retraction alone may be sufficient to produce an orifice larger than that desired, in which case the screw is turned backward from the zero setting rather than forward.

The precision with which the piercing needles can be lapped is indicated by Fig. 11. The figure also indicates the internal shape of the capillaries since that shape is forced to be the same as the shape of the needle.

The lapped surface of the face of the Teflon capillary blank is retained throughout the piercing and annealing procedures by means of the unique jig and appurtenances. The electrical method for detecting when the needle has just penetrated the face of the blank is very sensitive. The needle can be advanced in very small increments of distance by use of a

UNCLASSIFIED
ORNL-LR-DWG. 70382

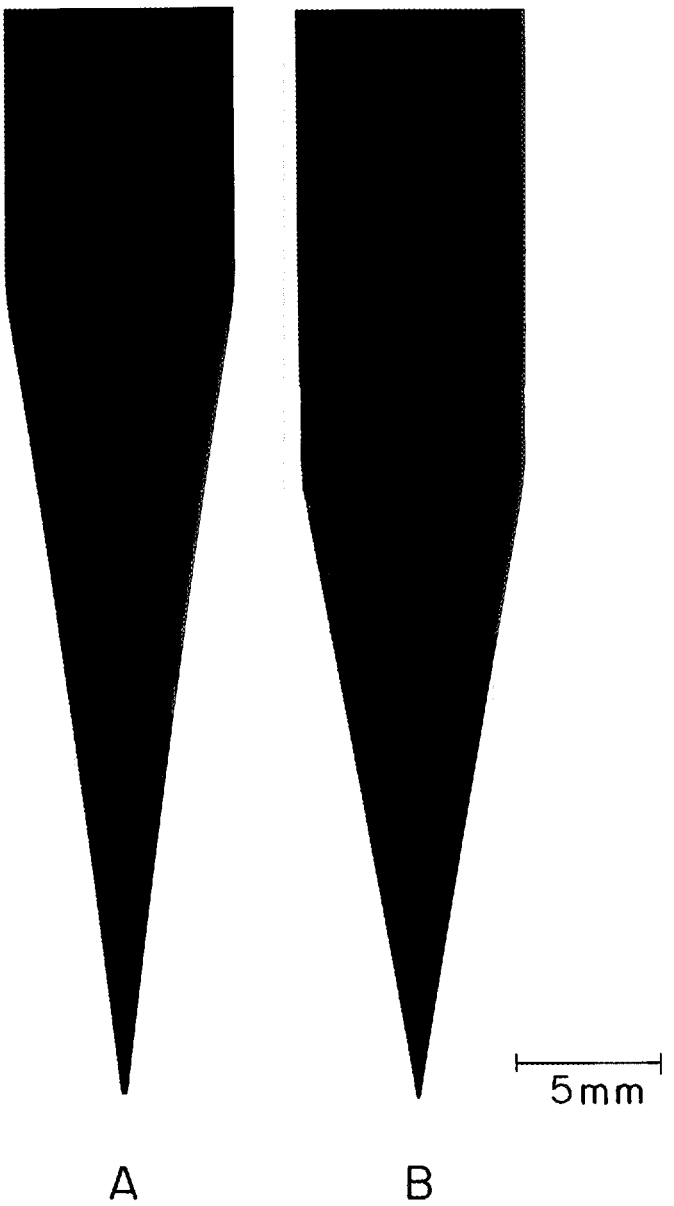

Fig. 11. Profile Photomicrographs of Precision-lapped Needles Used to Form Teflon-capillary Segments of Orifice Diameters in the Ranges Indicated. 48X magnification.

A. 15- to 20-μ
B. 45- to 110-μ

long lever to turn the screw. Cratering and projection of the Teflon immediately surrounding the orifice are prevented by the proper choice of material (aluminum sheet) that is in contact with face of the capillary during the piercing and annealing. Several other materials were tried, namely, mica, aluminum foil, and plastics, and were found to be unsatisfactory because of improper hardness, adhesion to the Teflon during annealing, or irregular surface. Flatness of the face of the capillary in the immediate vicinity of the orifice is achieved to within a few microns.

The orifice diameters in which the Sargent glass capillaries are available are not as small as that which has been achieved for the Teflon-capillary segment. It would seem advisable for the ratio of the orifice diameter of the glass to that of the Teflon segment to be less than one, the glass segment thereby being the rate-controlling segment. The design of the Teflon D.M.E. permits variation in this ratio. It may not always be possible to secure a glass capillary of orifice diameter smaller than that of the Teflon capillary. An assembly in which the ratio was greater than one was satisfactory.

The attachment of the Teflon-capillary and glass-capillary segments is a somewhat ciritical procedure; however, once the segments are attached, the electrode behaves as if it were a single segment, the mercury flowing through it in an unbroken thread as it does in a glass-capillary D.M.E.

In the course of this work, difficulty was encountered because the glass capillaries became plugged with very fine glass particles dislodged from the rims of the capillaries. The condition of the rims of the capillaries resulted from an unauthorized deviation introduced in the fabrication procedure for segmenting lengths of capillary tubing to form the "2-to-5 sec."

lengths provided by the supplier. Assurance was received from the supplier that the procedure would be corrected. To determine whether a glass capillary contains fines, it was inspected along its entire length under a microscope. The fines could be detected only if the capillary were observed against a dark field at about 30X magnification and if it were lighted from one end by means of a microscope light, such as the Bausch & Lomb Lamp Illuminator. If fines were present, they were removed by rinsing the capillary with water, ethyl alcohol, and acetone; if this procedure did not remove them, the capillary was subjected to ultrasonic vibration. Sometimes a capillary could not be unplugged. In no case should a glass capillary be used that is not free of the particles.

Efforts were made to fabricate the Teflon capillary by molding Teflon around a wire of known diameter and also by piercing a capillary blank with a needle and then heating the needle. Neither method was successful.

ACKNOWLEDGMENTS

The Teflon D.M.E. was fabricated under the supervision, from time-to-time, of J. M. Brown and J. L. Neal, Sr. The glassblowing was supervised by R. W. Poole. The optical and electron photomicrography was done by T. E. Willmarth with assistance from Mrs. Mary Huntsman. The illustrations were prepared by B. S. Dunlap. The authors gratefully acknowledge the contributions of these persons.

REFERENCES

1. American Society for Testing and Materials, Philadelphia, Pa., "Tentative Specifications for Tetrafluoroethylene Resin Molding and Extrusion Materials," D 1457-56T, 1956.

2. A. Elliott and J. H. Dickson, Laboratory Instruments, Their Design and Application, 2nd ed., pp. 45-47, Chemical Publishing Company, Inc., New York, 1960.

3. R. K. Kirby, J. Research Nat. Bur. Standards, 57, No. 2 (1956), RP2696.

4. F. L. M. Pattison, Toxic Aliphatic Fluorine Compounds, pp. 125-127, Elsevier Publishing Co., New York, 1959.

5. H. P. Raaen, Anal. Chem.; to be published, December, 1962.

6. Raybestos-Manhattan, Inc., Plastic Products Division, Manheim, Pa., "Basics in Machining of Teflon."

7. A. V. Tobolsky, D. Katz, and A. Eisenberg, "Maximum Relaxation Times in Polytetrafluoroethylene," Office of Naval Research Technical Rept. RLT-36, Frick Chemical Laboratory, Princeton University, Princeton, N. J., Sept. 5, 1961.

8. A. V. Tobolsky, D. Katz, and M. Takahashi, "Rheology of Polytetrafluoroethylene," Office of Naval Research Technical Rept. RLT-39, Frick Chemical Laboratory, Princeton University, Princeton, N. J., Nov. 21, 1961.

9. C. C. Winding and G. D. Hiatt, Polymeric Materials, pp. 293-296, McGraw-Hill, New York, 1961.

ORNL-3344
UC-4 — Chemistry
TID-4500 (18th ed.)

INTERNAL DISTRIBUTION

1. Biology Library
2-3. Central Research Library
4. Laboratory Shift Supervisor
5. Reactor Division Library
6-7. ORNL — Y-12 Technical Library Document Reference Section
8-42. Laboratory Records Department
43. Laboratory Records, ORNL R.C.
44. R. E. Biggers
45. W. Don Box
46. W. A. Blevins
47. C. J. Borkowski
48. G. E. Boyd
49. L. T. Corbin
50. D. A. Costanzo
51. R. M. Farnham
52. D. J. Fisher
53. R. J. Fox
54. W. H. Jordan
55. M. T. Kelley
56. C. E. Lamb
57. C. E. Larson
58. J. E. Longendorfer
59. D. L. Manning
60. J. L. Neal, Sr.
61. F. W. Postma
62. Helen P. Raaen
63. H. E. Seagren
64. M. J. Skinner
65. R. E. Sladky
66. C. D. Susano
67. J. A. Swartout
68. P. F. Thomason
69. V. E. Walker
70. A. M. Weinberg
71. J. C. White
72. J. P. Young
73. T. E. Zava
74. N. H. Furman (consultant)
75. D. N. Hume (consultant)
76. L. L. Merritt (consultant)
77. W. W. Meinke (consultant)
78. G. H. Morrison (consultant)

EXTERNAL DISTRIBUTION

79. A. F. Clifford, Department of Chemistry, Purdue University, West Lafayette, Indiana
80. J. Glickstein, Adelphi College, Garden City, Long Island, N.Y.
81. H. A. Laitinen, Department of Chemistry, University of Illinois, Urbana, Illinois
82. J. E. Rein, Analytical Branch, Atomic Energy Division, Phillips Petroleum Company, Idaho Falls, Idaho
83. L. B. Rogers, Department of Chemistry, Purdue University, West Lafayette, Indiana
84. H. H. Willard, 1926 Norway Road, Ann Arbor, Michigan
85. Research and Development Division, AEC, ORO
86-675. Given distribution as shown in TID-4500 (18th ed.) under Chemistry category (75 copies — OTS)