ORNL
MASTER COPY

OAK RIDGE NATIONAL LABORATORY
operated by
UNION CARBIDE CORPORATION
for the
U.S. ATOMIC ENERGY COMMISSION

ORNL-TM-154

COPY NO. - 23

DATE - Feb. 26, 1962

EVALUATIONS OF IWW CARRIER DESIGN FOR CONFORMANCE WITH CODE OF FEDERAL REGULATIONS, TITLE 10, PART 72

By

L. B. Shappert
A. M. Rom

ABSTRACT

A hazard analysis of the IWW waste solution cask has been made and evaluated for conformance with the applicable parts of the Code of Federal Regulations, Title 10, Part 72. The cask will be shipped by rail.

The cask has been found to be structurally strong. The normal operating pressure is about 7-10 psi. The most probable liquid temperature is 165°F assuming an ambient air temperature of 100°F. The dose rate at the side of the cask should be 75 mr/hr at the surface.

Under severe accident conditions, where the cask is exposed to deceleration forces of 60 g's or less, the cask will remain attached to the car and will be protected by a steel gridwork fastened to the gondola. In the event the accident includes a fire, a fire shield has been designed to fit around the cask and prevent direct impingement of flame on the cask.

NOTICE

This document contains information of a preliminary nature and was prepared primarily for internal use at the Oak Ridge National Laboratory. It is subject to revision or correction and therefore does not represent a final report. The information is not to be abstracted, reprinted or otherwise given public dissemination without the approval of the ORNL patent branch, Legal and Information Control Department.

EVALUATIONS OF IWW CARRIER DESIGN FOR CONFORMANCE WITH CODE OF FEDERAL REGULATIONS, TITLE 10, PART 72

A three-ton cask has been designed to permit the transport of small volumes ($\lesssim$ 5 gal) of radioactive waste solutions from various production sites to ORNL for experimental use. Drawings of this cask are appended to the report.

Although the reference document was written to control the transport of spent reactor fuel elements and not radioactive solutions, we believe that this evaluation shows that the cask as designed conforms with all applicable parts of CFR Title 10, Part 72.

The numbering system used in this evaluation corresponds to the numbering system in the regulation. Some sections have been omitted if the section was obviously complied with or, more frequently, if it was not applicable.

For several instances under Part 72.32 the number of g's denotes the force part of the cask will take divided by the weight of that part of the cask.

72.32 Structural Integrity

(a) This cask cannot be adequately represented as a simple beam due to its squat design.

(b) Determine the effect on the cask caused by striking a solid object while in a horizontal position with a force of 60 times the weight of the cask.

Assume cask is a cylinder of uranium.

Neglect steel shell.

From Roark, Third Ed., p. 299

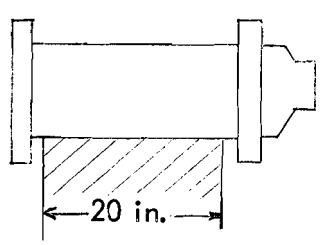

$$S = K\frac{2p}{\pi b}$$

where a = 6.38 in.

b = 11.38 in.

K = constant

p = force in lbs/in. along length of cylinder

$$= \frac{(6500 \text{ lbs})\ (60 \text{ g's})}{(20 \text{ in. long})} = 19{,}500 \text{ lbs/in.}$$

Point	1	2	3	4
K =	-11.0	+13.2	+4.6	-6.5
S =	-12,000 psi	+14,400	+5050	-7200

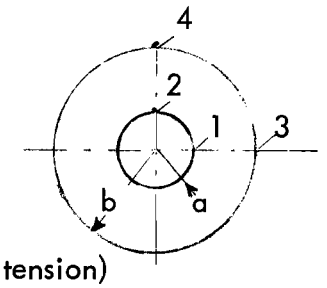

(minus sign indicates compression; plus indicates tension)

From Etherington, Nuclear Eng. Handbook, p. 10-25, Table 7,

Yield point U = 28,000 psi

Ultimate strength of uranium = 56,000 psi

The maximum stress in the uranium cylinder is 14,400 psi in tension and does not exceed the yield stress of uranium. This neglects the strength of the steel shells.

Determine the effect on the cask falling upside down and striking the trunions.

The inner container will tend to continue moving and will be resisted by twelve 3/8-in. 16 NC bolts. In addition, the mercury will create pressure which must be held by the bolts.

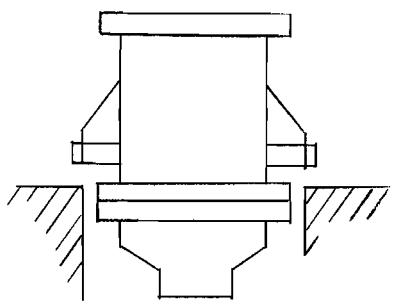

The height of Hg in cask = 17-1/4 in.
This is equivalent to 8.35 psi
Total pressure is on a 1-in.-wide annulus with a diameter of 13 in.,
Total mercury load = (13 in.) (π) (1-in. wide) (8.35) = 341 lbs total
Weight of inner container and cupola $\cong$ 875 lbs
Total load on bolts if container is upside down = 341 + 875 = 1216 lbs

The metal area in twelve 3/8-in. 16 NC bolts =

$$A_T = 12\ (0.068\ \text{in.}^2) = 0.815\ \text{in.}^2$$

Bolt strength is specified at 100,000 psi

The number of g's deceleration which the bolts will withstand is

$$g\text{'s} = \frac{(100{,}000\ \text{lbs/in.}^2)\ (0.815\ \text{in.}^2)}{1216\ \text{lbs}}$$

$$= 67\ g\text{'s}$$

(c) The cupola projects above the body of this cask and contains the valve and connecting lines inside it. The uranium cover of the cupola is bolted in place with twelve 3/8-in. 16 NC bolts and then the cupola is enclosed with an outer steel cover held in place also with sixteen 3/8-in. 16 NC bolts. There are no lifting devices on the outside steel cover and thus these bolts could not be subject to the full weight of the cask.

If the cask tipped over or was struck with some projectile, the cupola could be subject to a shearing force. The cupola must protect the connecting lines inside.

Determine the number of g's required to pull the outer steel cover off the cask, based on the cover's weight, and the g's required to pull the inner uranium cover off the cupola, based on its weight.

Steel cover:

Weight $\cong$ 25 lbs

Effective area of one 3/8-in. 20 NC bolt = 0.068 in.^{2}

Area of 16 bolts = (16) (0.068 in.^{2}) = 1.09 in.^{2}

Ultimate strength of type 347 stainless steel = 85,000 lb/in.^{2}

$$g's = \frac{(\sigma_T)\ (A_T)}{\text{weight}} = \frac{(85{,}000\ \text{lbs/in.}^2)\ (1.09\ \text{in.}^2)}{25\ \text{lbs}}$$

$$= \underline{3700\ g's}$$

Uranium cover:

Weight $\cong$ 40 lbs

$$g's = \frac{(85{,}000)\ (12\ \text{bolts})\ (0.068\ \text{in.}^2)}{40}$$

$$= \underline{1730\ g's}$$

Determine the number of g's required to shear the cupola to the point where the inside surface contacts the valve in the cupola. Approximately 1.5 in. of movement of the cupola is required. The area to be sheared is made up of three 1/4-in.-thick steel shells and one 1-in.-thick uranium shell.

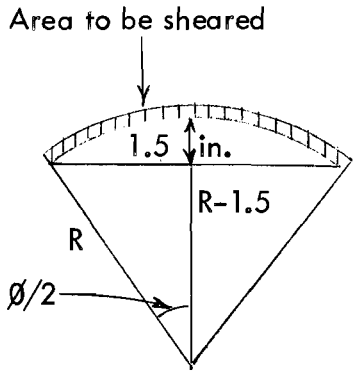

$$\cos \emptyset/2 = \frac{R-1.5}{R} = 1 - \frac{1.5}{R}$$

Shell	$\bar{D}$	Shell Thickness	$\frac{1.5}{R}$	Cos Ø/2	Ø	Area of Shear, in.^{2}
SS	11-3/8 in.	1/4 in.	0.264	0.736	85°	2.11
SS	10-3/4	1/4	0.279	0.721	88°	2.06
SS	8-1/4	1/4	0.364	0.636	101°	1.69
U	9-1/2	1	0.316	0.684	94°	7.77

σ_s (ultimate) for 347 SS = 0.6 x 85,000 = 51,000 lbs/in.^{2}

σ_s (ultimate) for uranium* = 70,000 lbs/in.^{2}

Total area of steel sheared = 5.86 in.^{2}

Force necessary to shear the uranium and steel:

Steel: (5.86 in.^{2}) (51,000 lbs/in.^{2}) = 299,080 lbs

Uranium: (7.77 in.^{2}) (70,000 lbs/in.^{2}) = 545,000 lbs

844,000 lbs

The number of g's required to shear the cupola to the previously specified point is

$$\frac{844{,}000 \text{ lbs}}{6500 \text{ lbs/cask}} = 130 \text{ g's}$$

Using the same type analysis, a 60 g shear force applied to the cupola would move the edge of the cupola approximately 0.78 in.

(d) Determine the pressure which the inside container can withstand under normal operating conditions.

---

* Etherington, Nuclear Eng. Handbook, p. 10-27, Table 12.

Cylindrical shell:

$$P = \frac{tSE}{R + 0.6\,t}$$

where t = thickness = 1/4 in.

S = max. allowable stress = 16,000 lbs/in.^{2}

E = joint efficiency = 1

R = inside radius = 11.5/2 = 5.75 in.

$$P = \frac{(1/4 \text{ in.})\ (16{,}000 \text{ lbs/in.}^2)\ (1)}{(5.75 \text{ in.}) + (0.6)\ (1/4 \text{ in.})} = 680 \text{ lbs/in.}^2$$

Elipsoidal head:

$$P = \frac{2tSE}{D + 0.2\,t}$$

$$P = \frac{(2)\ (16{,}000 \text{ lbs/in.}^2)\ (1)\ (1/4)}{(11.5 \text{ in.}) + (0.2)\ (1/4 \text{ in.})} = \underline{690 \text{ lbs/in.}^2}$$

These values normally have at least a safety factor of 5 based on the ultimate strength of steel. The Jamesbury valve is rated at 800 lbs/in.^{2} and has a safety factor of 2. The inside container is therefore safe under normal operating conditions.

(e) The vapor pressure of mercury, which fills the annular cavity, is always below that of water. The pressure inside the cavity is, therefore, always greater than the external pressure due to the mercury at temperatures up to 1700°F and the stress in the inner steel container is always in tension.

(f) The cask is shipped with a Swagelok blank on each of two piping penetrations of the lead during shipment for safety. The third penetration, the probe, is teflon packed and may be rated for 400°F service. The containment cap over the probe has a design strength of 470 psi under normal operating conditions. The fourth penetration, the Jamesbury valve, is rated at 800 psi, this should ensure no leakage from the inner container to the cupola under normal shipping conditions.

72.33 Internal Structural Components

This section is not applicable.

72.34 Exterior and Attachments

(a) Determine the effect of a load 30 times the weight of the cask applied by a 6-in.-dia piston normal to the surface or the body of the cask.

Assume that the uranium is subject to this force and neglect the structural effect of the steel. A 6-in.-dia piston would make a line contact on the surface of the uranium.

$$p = \frac{(6500 \text{ lbs})\ (30 \text{ g's})}{6 \text{ in.}}$$

$$= 32{,}500 \text{ lbs/in.}$$

$$S = K\frac{2p}{\pi b} \quad \text{-- Roark, Third Ed., p. 299}$$

$$K = f(a/b) = f\left[\frac{6-3/8}{11-3/8}\right] = f\ (0.56)$$

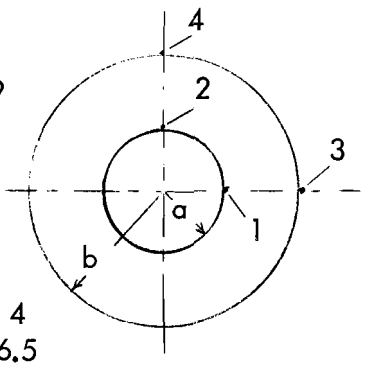

Point	1	2	3	4
K =	-11	+13.2	+4.6	-6.5
S =	-20,000	+24,000	+8400	-12,000
Type stress	Compression	Tension	Tension	Compression

at 75°F,

Yield point of U = 28,000 lbs/in.^{2}

Ultimate strength = 56,000 lbs/in.^{2} *

It is evident that the yield point of the uranium is not reached under the proposed loading.

In considering the involvement of the cask in a fire, a number of factors must be considered. First, the effect of a severe fire; second, the necessity of a fire shield; third, the possible sources of such severe fires and their probabilities of happening; and finally, the safety of the proposed shipment.

The effect of a fire on the cask proper will be to expand the materials from which the cask is built and to increase the temperature of the waste solution.

---

* Etherington, Nuclear Eng. Handbook, p. 10-25, Table 7.

Determine the effect of fire on the steel and uranium shield.

The uranium expands at a faster rate than the steel at high temperatures. The stress in the steel due to the expanding uranium can be approximated by

$$\sigma = \frac{\Delta\alpha E \Delta T}{1 - \nu}$$

Roark, Third Ed., p. 335.

where $\Delta\alpha$ = difference of thermal expansion rates of U and 347 SS

E = modulus of elasticity of 347 SS = 29×10^6 lbs/in.^{2}

ΔT = temperature rise from base temperature, °C

ν = poisons ratio for 347 SS = 0.26

$\alpha SS \cong 18.2 \times 10^{-6}/°C$ (500°C) Etherington, Nuc. Eng. Handbook, p. 10-61

$\alpha U \cong 18.5 \times 10^{-6}/°C$ (500°C) Etherington, Nuc. Eng. Handbook, p. 10-23

$$\sigma = \frac{(0.3 \times 10^{-6}/°C)\ (29 \times 10^6 \text{ lbs/in.}^2)\ (500°C)}{1 - 0.26}$$

$$= 5900 \text{ lbs/in.}^2$$

The yield strength of 347 SS at 500°C (930°F) $\cong$ 23,000 lbs/in.^{2}

Steel should not permanently deform at this temperature. Above 930°F the strength of the steel drops quickly, $\Delta\alpha$ increases and permanent deformation in the steel due to the expanding uranium would probably occur around 1000°F.

Uranium has three crystalline forms, α, β, and γ. The α form exists up to a temperature of 1230°F, the β from 1230 to 1400°F and the γ form above this temperature. In addition to the normal metal expansion due to increased temperature, there is a volume increase of about 1.12% when the uranium passes from the α to the β phase and about 0.70% volumetric increase in passing from the β to the γ phase.

However, the ductility of annealed 347 SS is greater than 10% at all temperatures below the melting point, reaching this minimum value at 1400°F and increasing at temperatures both higher and lower than this.

Since the steel is never stretched to this extent, it should never be ruptured by the expanding uranium, even up to 1700°F.

The top parts of the cask, which are lead-filled, have controlled voids built into them such that at temperatures up to 1700°F pressures cannot develop which might cause a rupture in the steel and subsequent loss of shielding. These voids allow approximately 10% by volume free space in these parts of the shield.

In the event of a fire, the vapor pressure of the waste solution will increase. The weakest point in the inside container from a pressure standpoint is the Jamesbury valve, which is rated at 800 psi at 220°F and has a safety factor of 2. However, the pressure rating drops rapidly above 350°F and the valve will fail before 400°F is reached.

If the cask is upright, the cupola will be pressurized with steam after the valve fails. This pressure will have two lines of containment, the uranium cover plate and the outer steel cover, both sealed with a stainless steel gasket. The pressure will then be contained by the uranium cover plate which has a minimum design strength of 250 psi.

The results of these effects suggest that the use of a fire shield might be helpful in preventing direct impingement of flame upon the cask and reducing the temperature-time curve if it is involved in a fire. Such a shield must be designed to permit free circulation of air around the cask during normal shipping operations. However, the shield could nevertheless materially lengthen the time to which the cask and shield might be exposed to a fire before critical internal temperatures are reached. This shield has been designed. The fire shield should not, however, jeopardize its own usefulness if an accident occurs and there is no fire.

The heat capacity of the cask is approximately 340 Btu/°F per total cask weight. Thus, even if the gondola turned on its side and became completely insulated by virtue of air flow stoppage around the cask due to the surrounding fire shield, the temperature rise would be only

$$\frac{1200 \text{ Btu/hr}}{340 \text{ Btu/°F}} = 3.5 \text{ °F/hr},$$

which is not very great. Even under the most probable adverse conditions save a fire, this temperature buildup is conservative due to the vents in the top and bottom of the shield.

A fire could occur from several different types of accidents. These are (1) a derailment in which the cask is in close proximity with a car carrying large amounts of flammable materials such as an oil tank car, (2) a head-end

or rear-end collision in which the cask was positioned near one end of the train and could be exposed to burning diesel oil, and (3) an accident involving a vehicle carrying flammable materials which might crash into the side of the cask car at some rail crossing site.

It is evident that the first two types of accidents may be virtually eliminated by correctly positioning the car in the train away from cars carrying flammable materials, as well as placing it away from the ends of the train. This leaves the third type of accident as the primary source of fire.

The number of accidents of this type which occurred in 1956 amounted to approximately 0.43 per one million railroad miles traveled. There are no statistics on the number of these accidents which involved a fire; but if it is postulated that 10% included a severe fire with the accident, then the accident rate with fire is reduced to 0.043 per million train miles. The trip from Hanford to Oak Ridge covers approximately 2600 miles; and with a shipping frequency of once every two months, an accident involving the loaded cask and a severe fire could be expected to occur only once every 1.5×10^3 years.

It is felt that the cask is quite rugged mechanically; and with the low probability of a fire and the additional protection of a fire shield, the cask and contents are as safe as practicable.

(c) Determine the adequacy of the tie-down arrangement of the cask. The tie-down is made by means of sixteen 1-1/8-in. 7 NC bolts.

Effective area = 0.693 in.^{2}/bolt

Total area = A_t = (16) (0.693 in.^{2}) = 11.1 in.^{2}

<u>Moment About Edge of Base</u>

$$N_g = \frac{(A_t)\ (D_{bc})\ (\sigma_t)}{(W_c)\ (2)\ (\bar{H})}$$

where N_g = number of g's

D_{bc} = diameter of the bolt circle, in.

σ_t = tensile strength, lbs/in.^{2}

W_c = weight of cask, lbs

$\bar{H}$ = average height of centroid of cask, in.

$$N_g = \frac{(11.1 \text{ in.}^2)\ (27 \text{ in.})\ (60{,}000 \text{ lb/in.}^2)}{(6500 \text{ lbs})\ (2)\ (16 \text{ in.})}$$

$$= 86.5 \text{ g's}$$

Shear of Cask Tie-down Bolts

Assuming $\sigma_s = 0.6\ \sigma_t$

$$N_g = \frac{(A_t)\ (\sigma_s)}{W_c}$$

$$= \frac{(11.1 \text{ in.}^2)\ (0.6)\ (60{,}000 \text{ lbs/in.}^2)}{6500 \text{ lbs}}$$

$$= 61.5 \text{ g's}$$

The tie-down bolts are thus weakest in shear and will resist at least 61.5 times the weight of the cask before failing. The sliding friction is not included in the calculation.

Determine how effective the tie-down of the fire shield is. This tie-down is made by means of twelve 3/4-in. 10 NC bolts. The shield is 3/16 in. thick and is stiffened by means of three hoops which are 2 x 2 x 1/4 in. angle.

Effective area/bolt = 0.334 in.^{2}

Total area = (12) (0.334 in.^{2}) = 4.0 in.^{2}

Moment About Edge of Shield

$$N_g = \frac{(A_t)\ (D_{bc})\ (\sigma_t)}{(W_s)\ (2)\ (\bar{H})}$$

where N_g = number of g's

D_{bc} = diameter of bolt circle = 28.25 in.

σ_t = tensile strength = 60,000 lbs/in.^{2}

W_s = weight of shield $\cong$ 325 lbs

$\bar{H}$ = average height of centroid of shell $\cong$ 24 in.

$$N_g = \frac{(40 \text{ in.}^2)\ (38.25 \text{ in.})\ (60{,}000 \text{ lbs/in.}^2)}{(350 \text{ lbs})\ (2)\ (24 \text{ in.})}$$

$$= \underline{550 \text{ g's}}$$

Shear of Shield Tie-down Bolts

Assume $\sigma_s = 0.6\ \sigma_t$

$$N_g = \frac{(A_t)\ (\sigma_s)}{W_s}$$

$$= \frac{(4 \text{ in.}^2)\ (0.6)\ (60{,}000 \text{ lbs/in.}^2)}{(350 \text{ lbs})}$$

$$= \underline{410 \text{ g's}}$$

(d) and (e) The trunnions on the cask are designed for lifting the cask but could be used to tie the cask down. Determine their effectiveness:

Trunnion in Shear

Cross sectional area of one trunnion = 3.14 in.^{2}

$$\sigma_{\text{Shear}} = 0.6\ \sigma_t = (0.6)\ (80{,}000 \text{ lbs/in.}^2)$$

$$= 48{,}000 \text{ lbs/in.}^2$$

$$\text{g's} = \frac{(A_t)\ (\sigma_s)}{W_c} = \frac{(3.14 \text{ in.}^2)\ (48{,}000 \text{ lbs/in.}^2)}{6500 \text{ lbs}}$$

$$= 23 \text{ g's/one trunnion}$$

Determine the stress due to bending on each trunnion assuming one end is fixed and there is a force imposed of six times the cask weight.

$$S_{max} = \frac{MC}{I}$$

where $M = 0.193\ W\ L$

$$W = (6)\ \frac{(\text{cask weight})}{2 \text{ trunnion}} = 19{,}500 \text{ lbs}$$

L = length of moment arm, in.

C = distance to centroid, in.

$I = \frac{\pi}{4} R^4$

R = radius of trunnion, in.

$$S_{max} = \frac{0.193\ W\ L}{\pi R^4/4}$$

$$= \frac{(0.193)\ (19{,}500\ \text{lbs})\ (3.5\ \text{in.})\ (1\ \text{in.})\ (4)}{\pi(1\ \text{in.})^4}$$

$$= 16{,}750\ \text{lbs/in.}^2$$

This stress, which already contains a factor of 6 safety, is about half the yield strength of the steel trunnion. The trunnion is, therefore, quite safe.

Determine tension in outer plate if one lifting cable should fail and the cask is supported only by one cable from one trunnion. Assume the cask is held on the cross section of the outer plate. The trunnion is welded around the hole, thus distributing the entire weight over the total cross section of the outer plate. Also assume a load of six times the cask weight.

$$S_{tension} = \frac{(6)\ (W_c)}{A_p}$$

where W_c = cask weight, lbs

A_p = cross sectional area of plate, in.^{2}

$$S = \frac{(6)\ (6500\ \text{lbs})}{(1/2\ \text{in.})\ (4\ \text{in.})} = \frac{39{,}000\ \text{lbs}}{2\ \text{in.}^2}$$

$$= 19{,}500\ \text{lbs (below the yield strength of 347 SS)}$$

The trunnions are therefore adequate to lift the cask and would also be adequate to tie the cask down, even though this is not their intended purpose.

(f) Determine the stress in the bale used to lift the lid of the cask off. Assume a factor of six safety.

The bale appears like an inverted V whose legs angle at 45° from the vertical. Each leg will take half the load.

$$S_t = \frac{(6)\ (W_l)}{(\text{Cos } \emptyset)\ (A_b)\ (2 \text{ legs})}$$

where W_l = weight of lid = 40 lbs

A_b = cross sectional area of bale = 0.049 in.^{2}

$\emptyset$ = 45°

$$S_t = \frac{240 \text{ lbs}}{(0.7)\ (0.049)\ (2)} = 3450 \text{ lbs/in.}^2$$

This is well below the yield stress in 347 SS. The bale will tend to shear at the eyes. Assume the shear is resisted at one point on each leg.

$$S_s = \frac{(6)\ (W_l)}{(2 \text{ legs})\ (A_b)} = \frac{240 \text{ lbs}}{(2)\ (0.049 \text{ in.}^2)}$$

$$= 2440 \text{ lbs/in.}^2$$

This compares to a shear stress in 347 SS of 48,000 lbs/in.^{2}

(g) Vibration should not affect the closure of the cask in any way.

(h) A wire seal will be attached to the cask through a bolt on the lid closure.

(i) A resistance thermometer will be housed and permanently fastened to the outside shell of the cask to provide reliable temperature readings of the cask surface.

(j) All external functional parts are protected by the cupola. For an analysis of the strength of the cupola, see Section 72.32 (c).

(k) Under normal transportation conditions, it is unlikely that any solution would leak into the cupola. If, however, an accident occurred which resulted in the cask assuming a horizontal attitude, then it would be possible for solution to flow into the pipes which penetrate the lead shielding. The resulting dose rate through the top of the cupola at one meter would be less than 200 mr/hr.

(m) It is felt that this cask, even though it is expected to operate under 7-10 lbs/in.^{2} pressure, should not be equipped with a pressure relief valve due to the nature of the material being transported.

(p) Discussion of cask pressure is covered under Sections 72.32 (d) and 72.38 (2) v.

(r) Existing pressure in the cask will be vented from the cask through a valve into an off-gas line equipped to handle radioactive off-gas before the waste solution is transferred from the cask.

72.35 Shielding

Determine the shielding effectiveness when the shipping cask contains 4.5 gal of concentrated Purex waste for the cooling period of interest.

Assumptions. The source strength of 4.35 gal of waste is as follows:

Group	Energy Range, Mev	Total γ dis./4.35 gal
I	0 - 0.25	1.01×10^{15}
II	0.26 - 1.00	2.94×10^{15}
III	1.00 - 1.70	4.95×10^{13}
IV	>1.70	1.40×10^{13}

Shield thickness of the cask body = 12.7 cm of uranium and 1.90 cm steel. The shielding through the top plug consists of 21.6 cm of lead and 1.9 cm of steel. The shielding effectiveness was determined by machine calculation.

(a) The dose rate at the side of the cask through the uranium should be 75 mr/hr at the surface and 7 mr/hr at 1 meter. The dose rate in the cupola without the uranium or steel cover in place will be approximately 100 mr/hr at the surface. After the covers are in place, the dose rate will be less than 10 mr/hr at the surface of the covers.

(c) The four piping penetrations through the lead shield are so designed that the radiation streaming through them is less than about 5 mr/hr.

(e) The four 1/4-in. pipes which penetrate the lead shield normally do not contain waste solution. The pipes might contain solution under accident conditions (see Section 72.34 k).

72.36 Materials and Methods of Cask Construction

This section has been complied with.

72.37 Control of Criticality

This section is not applicable.

72.38 Heat Removal

Determine the temperatures throughout the cask based on the following assumptions.

(1)	Waste heat source	1000 Btu/hr
	Solar heat load	220 Btu/hr
	Total heat load	1220 Btu/hr

(2) All heat transfer occurs through the uranium between the base and large flange. No heat transfer is considered through the top lead shield.

(3) Ambient air temperature = 100°F.

(a-1) Determine the cask surface temperature.

$$\Delta T = \frac{Q}{h_c A_s}$$

where h_c = 2 Btu/hr·ft^2 °F (still air)

$$A_s = \pi DH = \pi(1.96 \text{ ft})\ (1.83 \text{ ft}) = 11.3 \text{ ft}^2$$

$$\Delta T_1 = \frac{1220 \text{ Btu/hr}}{(2)\ (11.3 \text{ ft}^2)} = 54°F$$

surface temperature = 100°F + 54°F = <u>154°F</u>

(a-2 iii) Determine the temperatures throughout the cask.

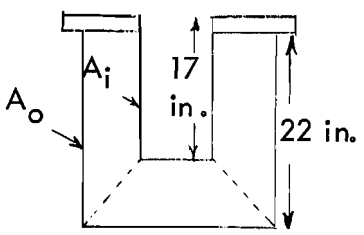

$$A_o = \pi DH = \frac{\pi}{144}(22.75)\ (22)$$

$$= 10.9 \text{ ft}^2$$

$$A_i = \pi DH = \frac{\pi}{144}(12.75)\ (17)$$

$$= 4.7 \text{ ft}^2$$

<u>Outer Shell</u>

The heat load from the cavity is used to determine the temperature drops throughout the cask.

$$\Delta T_2 = \frac{Q}{A_s\left(\frac{ks}{T}\right)}$$

where $k_s = 8.5$ Btu/hr·ft °F

$$l = \frac{1/2 \text{ in.}}{12 \text{ in./ft}} \cong 0.04 \text{ ft °F}$$

$$Q = 1000 \text{ Btu/hr}$$

$$\Delta T_2 = \frac{1000 \text{ Btu/hr}}{(11.3 \text{ ft}^2)\left(\frac{8.5}{0.04}\right)} = \underline{0.4 \text{ °F}}$$

Uranium

$$\Delta T_3 = \frac{Q}{A_{lm}\left(\frac{k}{l}\right)}$$

where $A_{lm} = \frac{A_o - A_i}{\ln A_o/A_i} = \frac{6.2 \text{ ft}^2}{\ln 2.32} = 7.4 \text{ ft}^2$

$$k = 15.5 \text{ Btu/hr·ft °F}$$

$$l = 5 \text{ in./12 in./ft} = 0.416 \text{ ft}$$

$$\Delta T_3 = \frac{1000 \text{ Btu/hr}}{(7.4 \text{ ft}^2)\left(\frac{15.5}{0.416}\right)} = \underline{3.7 \text{ °F}}$$

Air Gap

A 1/64-in. air gap is assumed between the inner steel shell and uranium shield formed during fabrication.

$$\Delta T_4 = \frac{Q}{A_i\left(\frac{k}{l}\right)}$$

where $k = 0.016$ Btu/hr·ft °F

$$l = \frac{1/64 \text{ in.}}{12 \text{ in./ft}} = 0.00130 \text{ ft}$$

$$\Delta T_4 = \frac{1000 \text{ Btu/hr}}{(4.7 \text{ ft}^2)\left(\frac{0.016}{0.0013}\right)} = \underline{17 \text{°F}}$$

Inside Shells and Mercury

Calculate the two remaining steel shells and mercury as one resistance with the thermal conductivity of mercury.

$$\Delta T_5 = \frac{Q}{A\left(\frac{k}{l}\right)}$$

where $A \cong 4.5\ ft^2$

$k = 4.8$ Btu/hr·ft °F

$$l = \frac{5/8 \text{ in.}}{12 \text{ in./ft}} = 0.052 \text{ ft}$$

$$\Delta T_5 = \frac{1000 \text{ Btu/hr}}{(4.8\ ft^2)\left(\frac{4.5}{0.052}\right)} = 2.4°F$$

Bulk Liquid Temperature

Assume a ΔT of 6°F and bulk temperature $\cong$ 185°F

$$Gr = \frac{D^3 \rho^2\ g\ \beta \Delta T}{\mu^2} = (1.11 \times 10^9) D^3\ \Delta T$$

where D = diameter, ft

ΔT = temperature difference, °F

$$Gr = (1.11 \times 10^9)\ (0.83\ ft)^3\ (6°F) = 3.8 \times 10^9$$

$Pr = 1.88$

$Nu = 0.555\ (Gr\ Pr)^{1/4}$

Since $Nu = \frac{h_c \rho}{k}$

where $k = 0.39$ Btu/hr·ft °F (water at 185°F)

then

$$h_c = 0.555 \left[(3.8 \times 10^9)\ (188)\right]^{1/4} \left(\frac{k}{D}\right)$$

$$= (160)\left(\frac{0.39}{0.83}\right) = 76 \text{ Btu/hr}\cdot\text{ft}^2\ ^\circ\text{F}$$

$$\Delta T_6 = \frac{Q}{h_c A}$$

where $A = \pi DH = \left(\frac{\pi}{144}\right)(11.5 \text{ in.})(10 \text{ in.}) = 2.52 \text{ ft}^2$

$$\Delta T_6 = \frac{1000 \text{ Btu/hr}}{(76)(2.52 \text{ ft}^2)} = 5.3^\circ\text{F}$$

This checks the originally assumed 6°F temperature drop across liquid film.

Recapitulation:

ΔT_1	= 54°F	air film
ΔT_2	= 0.4°F	steel shell
ΔT_3	= 3.7	uranium
ΔT_4	= 17.0	1/64-in. air gap
ΔT_5	= 2.4	inner shells and mercury
ΔT_6	= 5.3	water
	82.8°F	

The temperature of the solution in the cask could thus be about 183°F with an ambient air temperature of 100°F. Included in this calculation is a 17°F temperature drop across an improbable air film. The fabrication of the uranium cask should be such as to preclude any air film. The most probable maximum liquid temperature is 166°F.

(iv) No significant corrosion of the 304L SS inner shell or 347 SS outer shell is anticipated. Gasketing and insulation material exposed to the 5.6 M nitric acid solution is teflon and polyethylene. These materials should hold up satisfactorily and may be easily replaced if necessary.

(v) The pressure in the cask under normal operating conditions should be about 10 psig. This pressure consists of 7.6 psi partial pressure of the solution and a possible 3 psi from expansion of trapped air. An analysis of the pressure which the cask can withstand is given in Section 72.32 (d).

(3) Not applicable.

ACKNOWLEDGEMENT

The authors wish to acknowledge the structural calculations performed by Brice W. Kinyon.

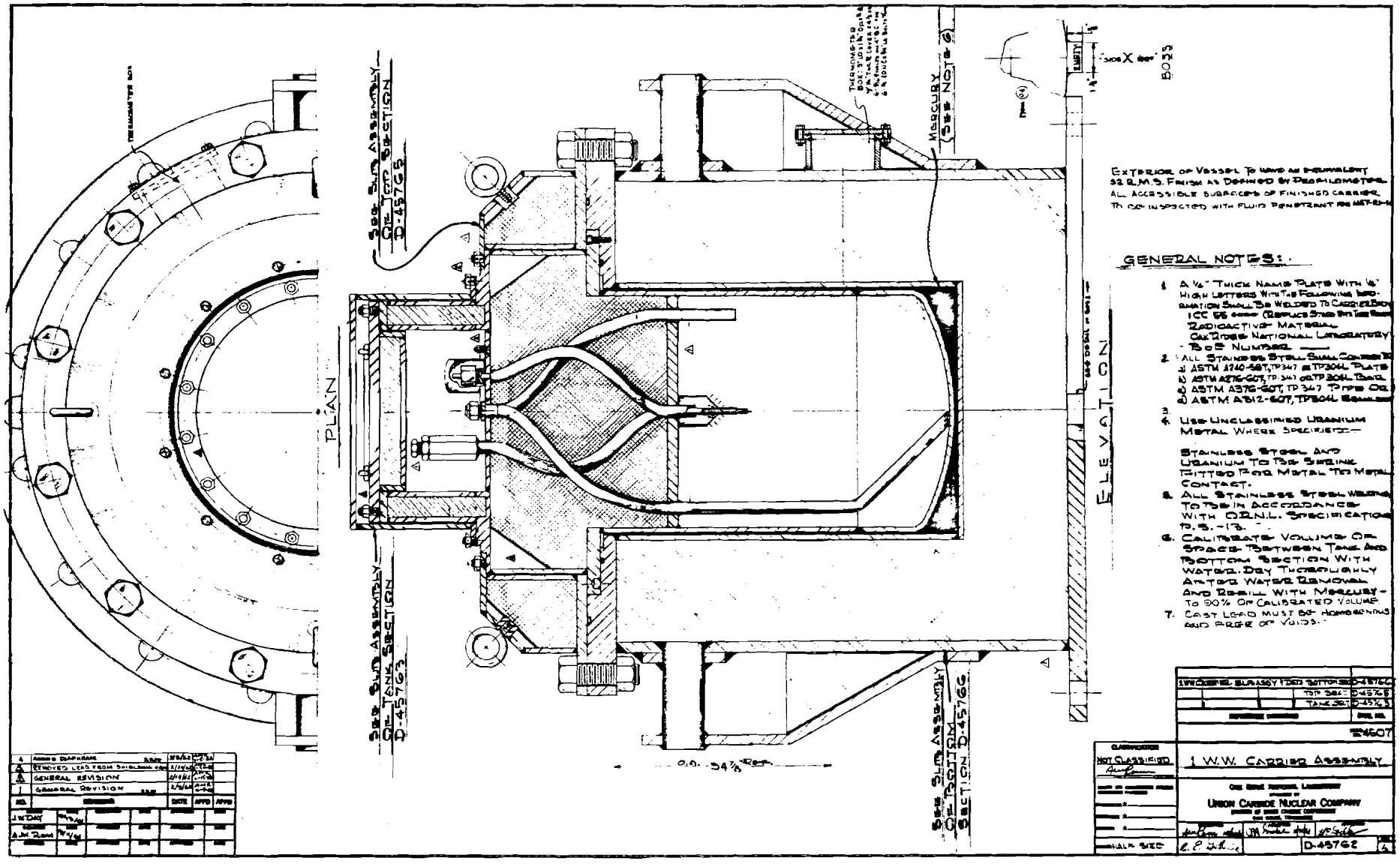
PLAN
ELEVATION
SEE SUB ASSEMBLY CL TOP SECTION D-45763
SEE SUB ASSEMBLY CL TANK SECTION D-45763
SEE SUB ASSEMBLY CL BOTTOM SECTION D-45763
MERCURY (SEE NOTE 6)
THERMOMETER BOX
EMPTY
BOSS
O.D. 54 7/8 REF
EXTERIOR OF VESSEL TO HAVE AN EQUIVALENT 32 R.M.S. FINISH AS DEFINED BY PROFILOMETER.
ALL ACCESSIBLE SURFACES OF FINISHED CARRIER TO BE INSPECTED WITH FLUID PENETRANT PER MET-R-1
GENERAL NOTES:
1. A 1/16" THICK NAME PLATE WITH 1/8" HIGH LETTERS WITH THE FOLLOWING INFORMATION SHALL BE WELDED TO CARRIER BODY
ICC 55 (REPLACE STAMP WITH THIS PLATE)
RADIOACTIVE MATERIAL
OAK RIDGE NATIONAL LABORATORY
B & P NUMBER ____
2. ALL STAINLESS STEEL SHALL CONFORM TO
a) ASTM A240-58T, TP347 OR TP304L PLATE
b) ASTM A276-60T, TP 347 OR TP 304L BARS
c) ASTM A376-60T, TP 347 PIPES OR
d) ASTM A312-60T, TP304L SEAMLESS
3. USE UNCLASSIFIED URANIUM METAL WHERE SPECIFIED.
STAINLESS STEEL AND URANIUM TO BE SHRINK FITTED FOR METAL TO METAL CONTACT.
5. ALL STAINLESS STEEL WELDING TO BE IN ACCORDANCE WITH O.R.N.L. SPECIFICATION P.S.-13.
6. CALIBRATE VOLUME OF SPACE BETWEEN TANK AND BOTTOM SECTION WITH WATER. DRY THOROUGHLY AFTER WATER REMOVAL AND REFILL WITH MERCURY - TO 90% OF CALIBRATED VOLUME.
7. CAST LEAD MUST BE HOMOGENOUS AND FREE OF VOIDS.
SUPERSEDES SUB ASSY FOR BOTTOM SECTION D-45766
TOP SECT. D-45765
TANK SECT. D-45763
E4607
NOT CLASSIFIED
1 W.W. CARRIER ASSEMBLY
OAK RIDGE NATIONAL LABORATORY
UNION CARBIDE NUCLEAR COMPANY
D-45762
SCALE SIZE
4 AMOS DIAPHRAGM
3 REMOVED LEAD FROM SHIELDING
2 GENERAL REVISION
1 GENERAL REVISION
NO. DATE APPD APPD
J. W. DAY
A. M. ZUNI

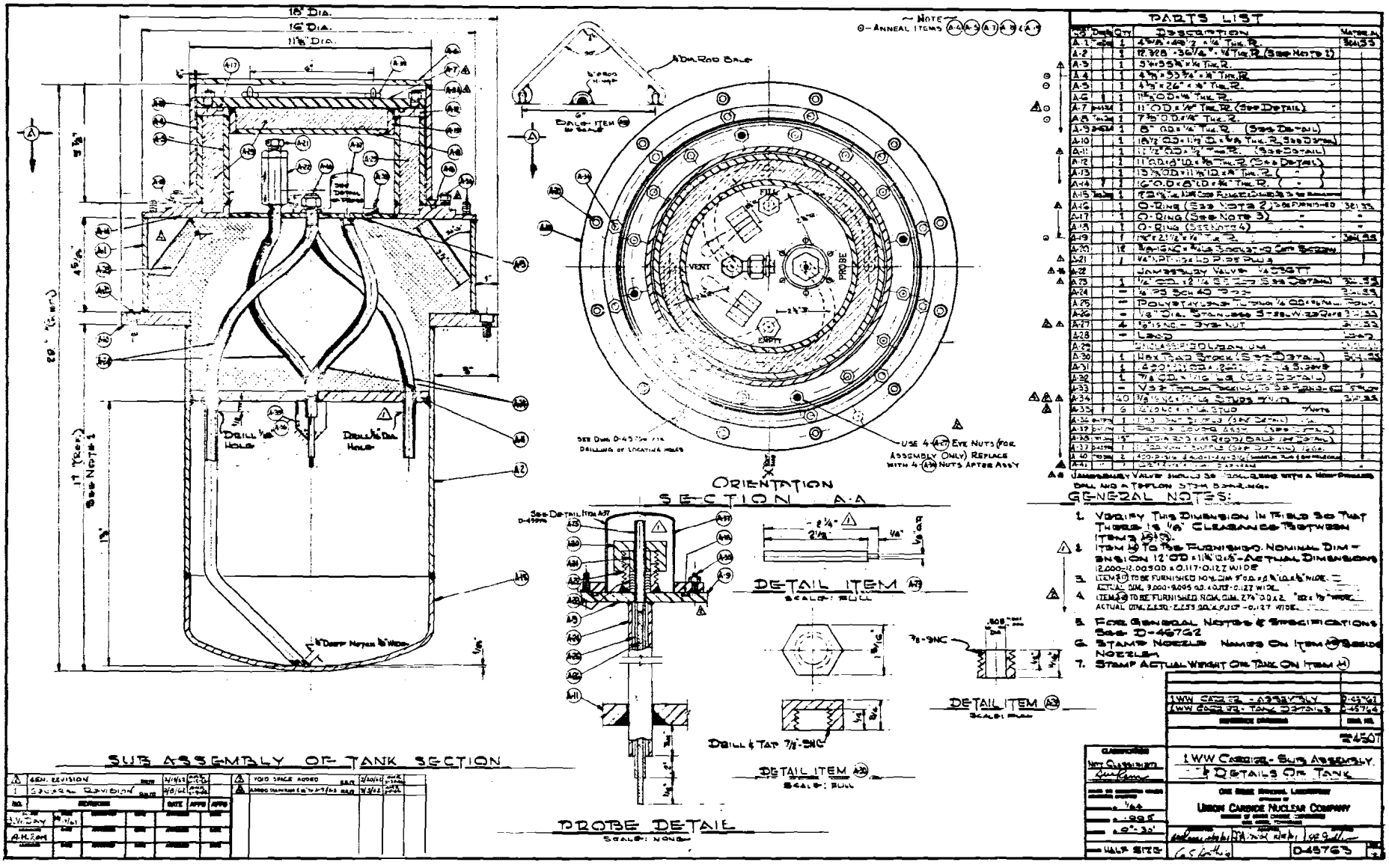
SUB ASSEMBLY OF TANK SECTION
ORIENTATION SECTION A-A
PROBE DETAIL
DETAIL ITEM A37
DETAIL ITEM A38
DETAIL ITEM A39
PARTS LIST
GENERAL NOTES:
1. VERIFY THIS DIMENSION IN FIELD SO THAT THERE IS 1/16" CLEARANCE BETWEEN ITEMS 38 & 39.
2. ITEM 38 TO BE FURNISHED. NOMINAL DIMENSION 12" OD x 1 1/16" x 1/8" - ACTUAL DIMENSIONS 12.000-12.005 OD x 0.117-0.127 WIDE
3. ITEM 39 TO BE FURNISHED NOM. DIM 9" O.D. x 8 3/4" I.D. x 1/8" WIDE.
4. ITEM 39 TO BE FURNISHED NOM. DIM. 2 7/8" O.D. x 2. 1/8" x 1/8" WIDE.
5. FOR GENERAL NOTES & SPECIFICATIONS SEE D-45722
6. STAMP NOZZLES NAMES ON ITEM 39 BESIDE NOZZLES
7. STAMP ACTUAL WEIGHT ON TANK ON ITEM 41
1 WW CARBIDE - ASSEMBLY D-45761
1 WW CARBIDE - TANK DETAILS D-45762
1 WW CARBIDE - SUB ASSEMBLY & DETAILS OF TANK
UNION CARBIDE NUCLEAR COMPANY
D-45763

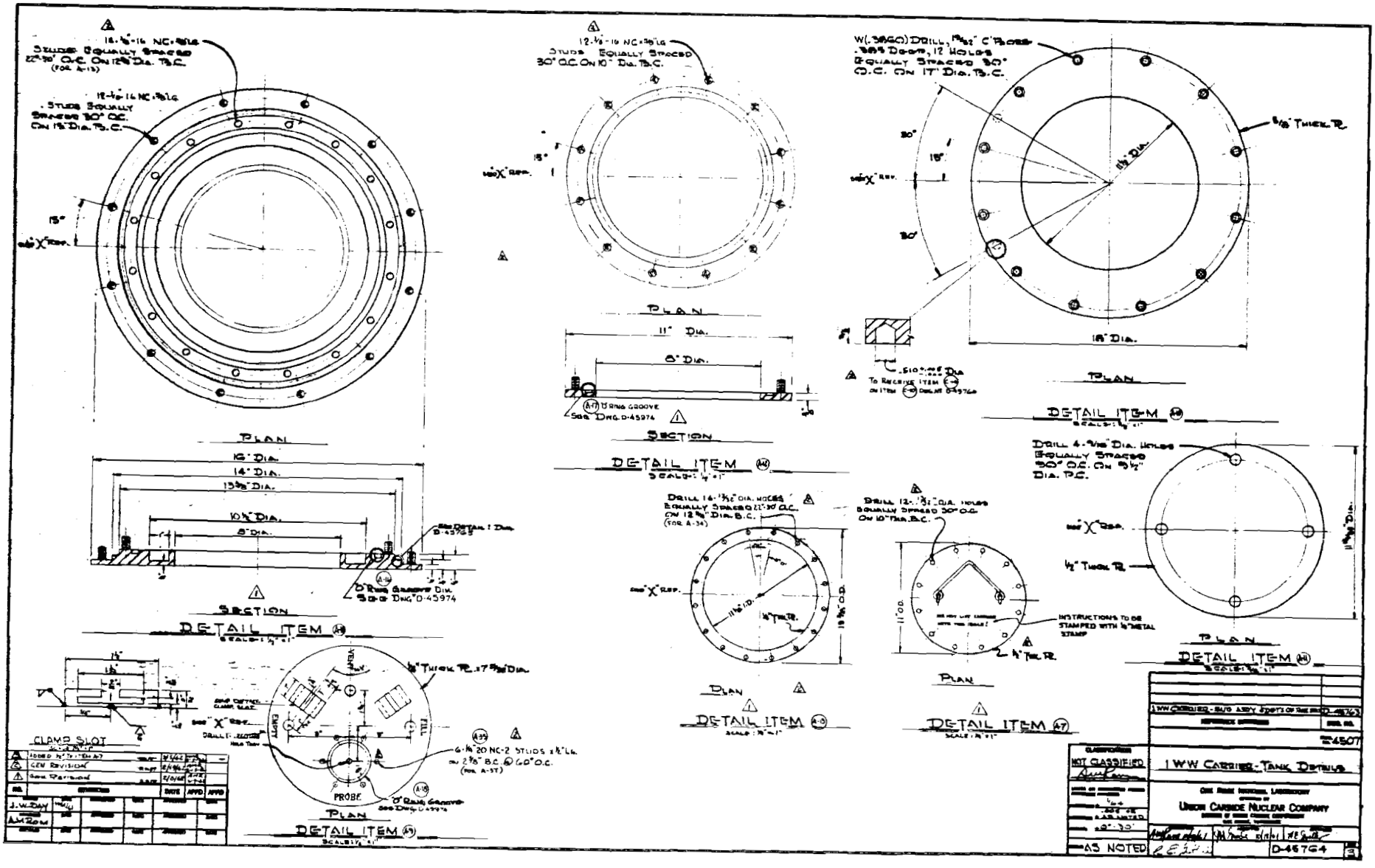
PLAN
SECTION
DETAIL ITEM
PROBE
CLAMP SLOT
1 WW CARRIER - TANK DETAILS
UNION CARBIDE NUCLEAR COMPANY
NOT CLASSIFIED
AS NOTED
D-45764

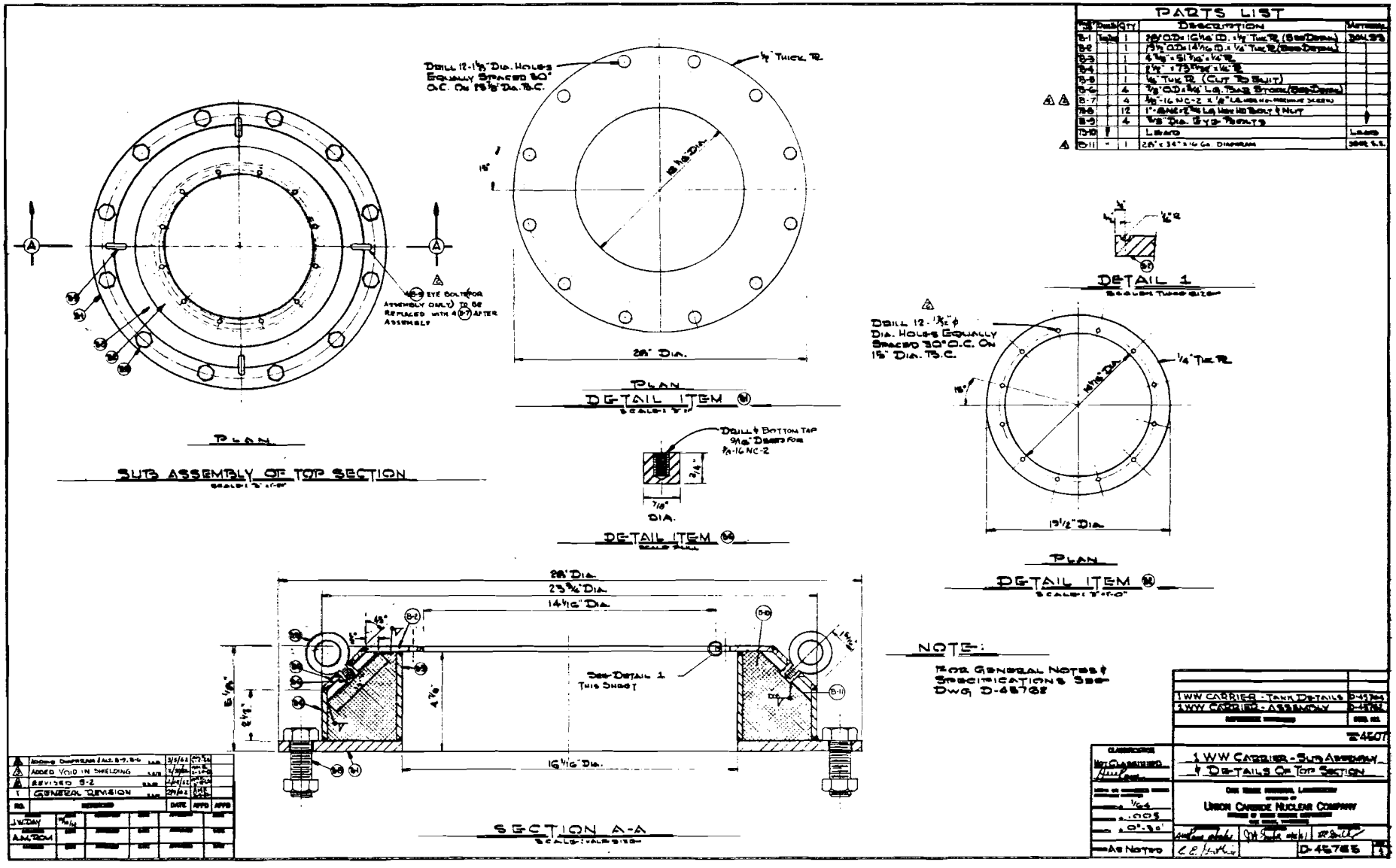
PARTS LIST
DESCRIPTION
QTY
MATERIAL
PLAN
SUB ASSEMBLY OF TOP SECTION
DETAIL ITEM
DETAIL 1
PLAN
DETAIL ITEM
SECTION A-A
NOTE:
FOR GENERAL NOTES & SPECIFICATIONS SEE DWG. D-45765
1 WW CARRIER - SUB ASSEMBLY & DETAILS OF TOP SECTION
UNION CARBIDE NUCLEAR COMPANY
D-45765

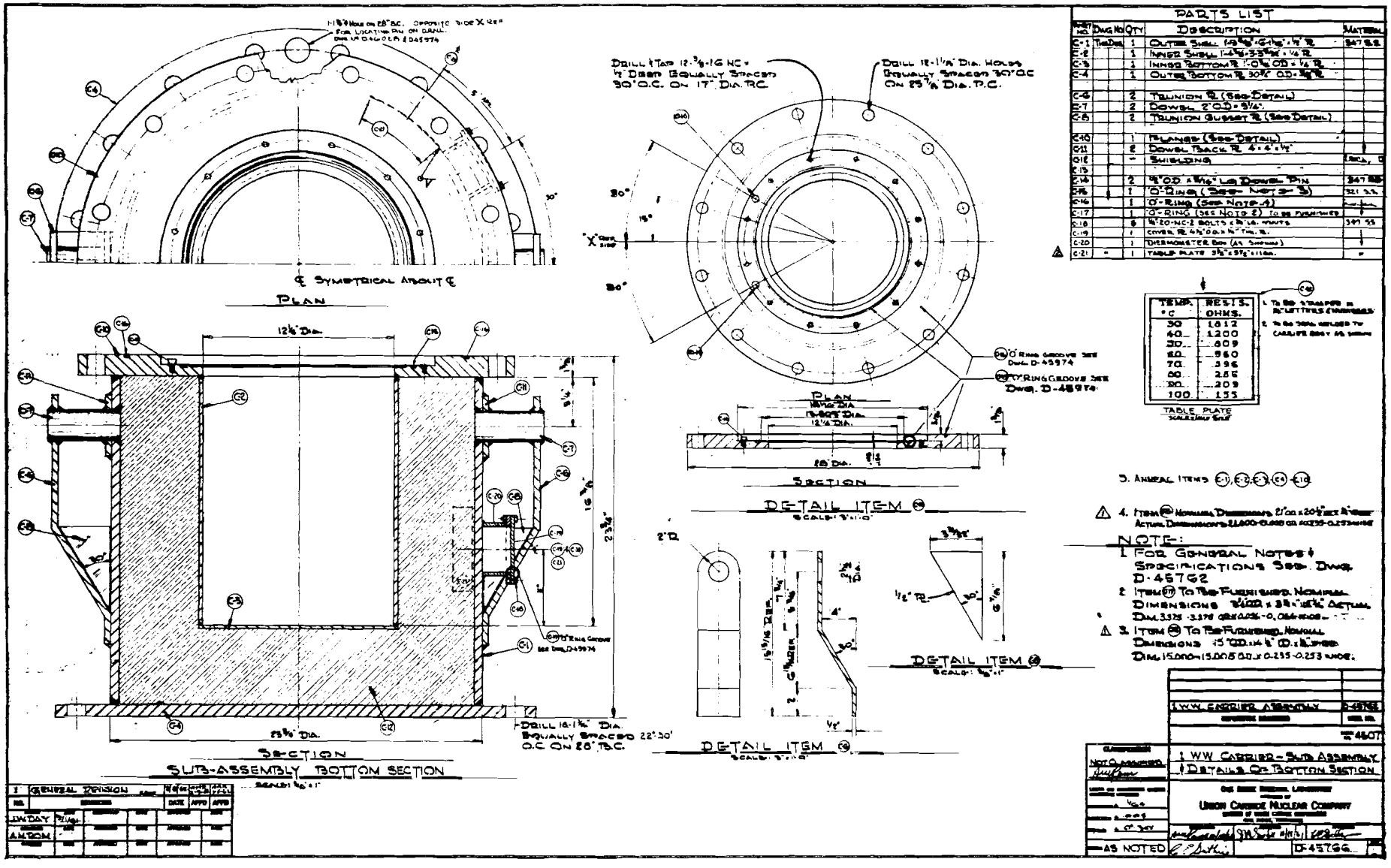
PARTS LIST
DRILL & TAP 12-3/8-16 NC × 1/2" DEEP EQUALLY SPACED 30° O.C. ON 17" DIA. P.C.
DRILL 12-1 1/8" DIA. HOLES EQUALLY SPACED 30° O.C. ON 25 3/8" DIA. P.C.
℄ SYMMETRICAL ABOUT ℄
PLAN
SECTION
DETAIL ITEM
SUB-ASSEMBLY BOTTOM SECTION
TABLE PLATE
NOTE:
1. FOR GENERAL NOTES & SPECIFICATIONS SEE DWG. D-45762
2. ITEM TO BE FURNISHED. NOMINAL DIMENSIONS
3. ITEM TO BE FURNISHED. NOMINAL DIMENSIONS
4. ITEM NOMINAL DIMENSIONS
5. ANNEAL ITEMS
1 W.W. CARRIER ASSEMBLY
1 WW CARRIER - SUB ASSEMBLY & DETAILS OF BOTTOM SECTION
UNION CARBIDE NUCLEAR COMPANY
AS NOTED
D-45766

GROOVE DIMENSIONS					
ITEM NO.	I.D.	OUTSIDE DIA. MIN.	OUTSIDE DIA. MAX.	DEPTH MIN.	DEPTH MAX.
A-16	11.705	12.007	12.012	0.090	0.095
A-17	8.705	9.007	9.012	0.090	0.095
A-18	1.955	2.257	2.262	0.090	0.095
C-15	14.420	15.011	15.019	0.195	0.200
C-16	20.420	21.011	21.019	0.195	0.200
C-17	3.334	3.379	3.389	0.042	0.045

MACHINE GROOVE SURFACES TO 32 RMS. FINISH

"O" RING GROOVE CHART

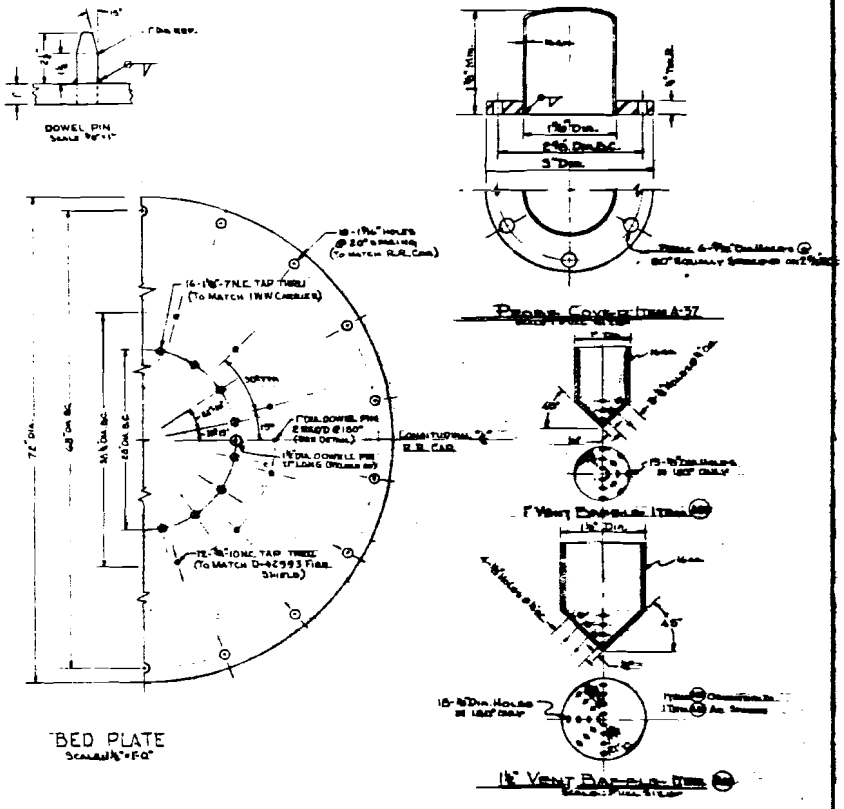

IWW CARRIER FIRE SHIELD	D-42998	
IWW CARRIER SUB-ASSY & DETAILS-BOTTOM	D-45766	
IWW CARRIER ASSEMBLY	D-45762	
	DWG. NO.	
	4507	

IWW CARRIER - R.R. BED PLATE & DETAILS

UNCLASSIFIED

UNION CARBIDE NUCLEAR COMPANY

AS NOTED

D-45974 2

NO.	REVISIONS	DATE	APPD	APPD
2	REVISED BED PLATE ASSEMBLY DWG.	4/20/62		
1	REVISED A-18 GROOVE & A-37	4/18/62		

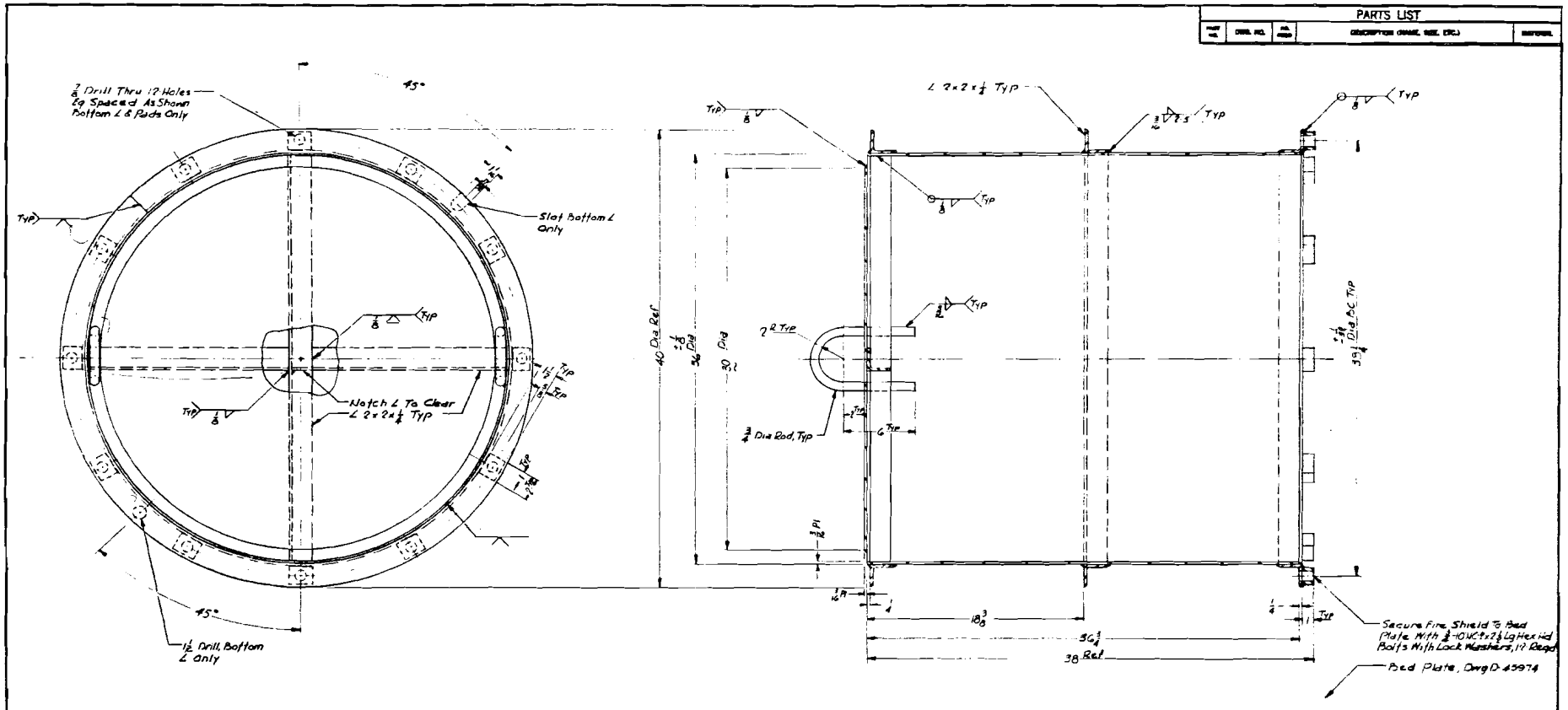

FIRE SHIELD
Mat'l: Steel
1 Required

Welding Notes

1. Weld in accordance with AWS Welding Symbols.
2. Welds shall be free from slag inclusions, undercuts, cracks, or underwelding. If so indicated, welds to be full penetration with complete fusion.
3. Visually inspect [illegible] after welding. Check [illegible] for complete penetration. Repair or remove weld defects.

FACIT NOTE:

Remove all loose rust and scale and clean and degrease steel. Apply one primer coat of Pittsburgh 66-2 Red (Provide metal preservative paint and two coats of Pittsburgh 66-1 light gray (Provide metal preservative paint or approved equal.

GENERAL SPECIFICATIONS

Unless Otherwise Specified:
1. Break all sharp edges 1/64 max.
2. Type, grade, or finish of material may be chosen by fabricator.
3. Roughness height of machined surfaces shall not exceed 125 μ.

(Finish symbols and height values are in accordance with ASA B46.1 1955.)

SCALE 1/8" = 1"

LTR	REVISIONS				DATE	APPD	APPD
	J. E. Corum	2-20-62	M. Zwilsler	2-20-62			

I W W Carrier Railroad Bed Pl & Details D-45974
REFERENCE DRAWINGS — DWG. NO.

Fire Shield — 4507

I W.W. CARRIER
FIRE SHIELD

OAK RIDGE NATIONAL LABORATORY
operated by
UNION CARBIDE NUCLEAR COMPANY
DIVISION OF UNION CARBIDE CORPORATION
OAK RIDGE, TENNESSEE

D-42993

DISTRIBUTION

1. R. E. Blanco
2. J. O. Blomeke
3. J. C. Bresee
4. K. B. Brown
5. F. R. Bruce
6. F. L. Culler, Jr.
7. D. E. Ferguson
8. J. R. Flanary
9. H. E. Goeller
10. H. B. Graham
11. A. T. Gresky
12. C. E. Guthrie
13. K. W. Haff
14. B. W. Kinyon
15. A. M. Rom
16. L. B. Shappert
17-18. H. P. Shaw, GE, Hanford
19. M. J. Skinner
20. J. W. Ullmann
21. H. O. Weeren
22. M. E. Whatley
23. Laboratory Records, RC
24-28. Laboratory Records
29-30. Central Research Library
31. Document Reference Section
32. R & D Division, ORO
33-47. DTIE