ORNL
MASTER COPY

OAK RIDGE NATIONAL LABORATORY
operated by
UNION CARBIDE CORPORATION
for the
U.S. ATOMIC ENERGY COMMISSION

ORNL - TM - 168

COPY NO. - 71

DATE - March 8, 1962

SWAPS – AN EXPERIMENTAL PROGRAM FOR NUMERICAL SOLUTION OF THE TRANSPORT EQUATION WITH ANISOTROPIC SCATTERING IN ONE-DIMENSIONAL SLAB GEOMETRY

Melvin L. Tobias and Tom B. Fowler

ABSTRACT

The program described in this report is part of an attempt to solve the neutron transport equation in as general a manner as present day machine capacity will permit. The simple iterative technique employed is equivalent to the EQUIPOISE method modified by a form of block relaxation. The block relaxation method is extremely simple and should be generally applicable not only to transport equation programs but also to heat conduction problems and neutron diffusion programs in more than one dimension. In terms of mesh sweeps, the procedure is extremely rapid by comparison with a similar program. Two energy groups, 16 angular directions, and 400 mesh points, are provided. Anisotropic scattering is permitted, and an arbitrary one-dimensional distribution of material properties can be used. Checks of the results of the program against published analytical results for both isotropic and anisotropic scattering have been in excellent agreement.

NOTICE

This document contains information of a preliminary nature and was prepared primarily for internal use at the Oak Ridge National Laboratory. It is subject to revision or correction and therefore does not represent a final report. The information is not to be abstracted, reprinted or otherwise given public dissemination without the approval of the ORNL patent branch, Legal and Information Control Department.

LEGAL NOTICE

This report was prepared as an account of Government sponsored work. Neither the United States, nor the Commission, nor any person acting on behalf of the Commission:

A. Makes any warranty or representation, expressed or implied, with respect to the accuracy, completeness, or usefulness of the information contained in this report, or that the use of any information, apparatus, method, or process disclosed in this report may not infringe privately owned rights; or

B. Assumes any liabilities with respect to the use of, or for damages resulting from the use of any information, apparatus, method, or process disclosed in this report.

As used in the above, "person acting on behalf of the Commission" includes any employee or contractor of the Commission, or employee of such contractor, to the extent that such employee or contractor of the Commission, or employee of such contractor prepares, disseminates, or provides access to, any information pursuant to his employment or contract with the Commission, or his employment with such contractor.

SWAPS – AN EXPERIMENTAL PROGRAM FOR NUMERICAL SOLUTION OF THE TRANSPORT EQUATION WITH ANISOTROPIC SCATTERING IN ONE-DIMENSIONAL SLAB GEOMETRY

I. Introduction

The EQUIPOISE method[1] has been successfully applied to the problem of solving the neutron transport equation in slab geometry including the effects of anisotropic scattering in the laboratory system. The present program permits the use of an arbitrary distribution of 20 materials in up to 100 regions over 400 mesh points. Two energy groups are considered and as many as 16 angular directions may be used. Two types of anisotropic collision are treated, one of which is scattering from group to group (both ways) while the other is scattering within a group. Permitted boundary conditions at either or both faces are zero return current, zero net current, and arbitrary incoming current.

Succeeding sections of this report will describe the equations upon which the program is based, the iterative method (including the new block relaxation technique), a comparison of program results with published analytical results, and instructions for program input.

It must be pointed out that SWAPS is at the present time an experimental code and does not have built into it all the refinements of a finished program. It is nevertheless easy to use and the answers are clearly identified. The program requires between 0.009 and 0.016 sec per point per angular direction per iteration for anisotropic scattering problems and about 0.002 sec per point per angle per iteration for isotropic scattering problems. Instructions for input preparation and a sample problem are given in the Appendix.

II. Difference Equation Form of the Boltzmann Equation for Slab Geometry

The basic technique used to treat the Boltzmann equation numerically is very similar to the methods used in the SNG and DSN codes of Carlson.[2] The difference equations will be derived directly rather than by differencing the integro-differential form of the Boltzmann

equation. This procedure is used to make certain that the resulting difference equations are an approximation to the physical process. (All symbols are defined in a table of notation at the end of Sec. VII.)

In one-dimensional slab geometry it is necessary to consider variation of angular flux in only one of the three coordinates and only one angular direction. For, if a slab is infinite and uniform in the y and z coordinates, the angular flux is constant for a given x and in a cone having a given generating angle α with the x axis. (See Fig. 1)

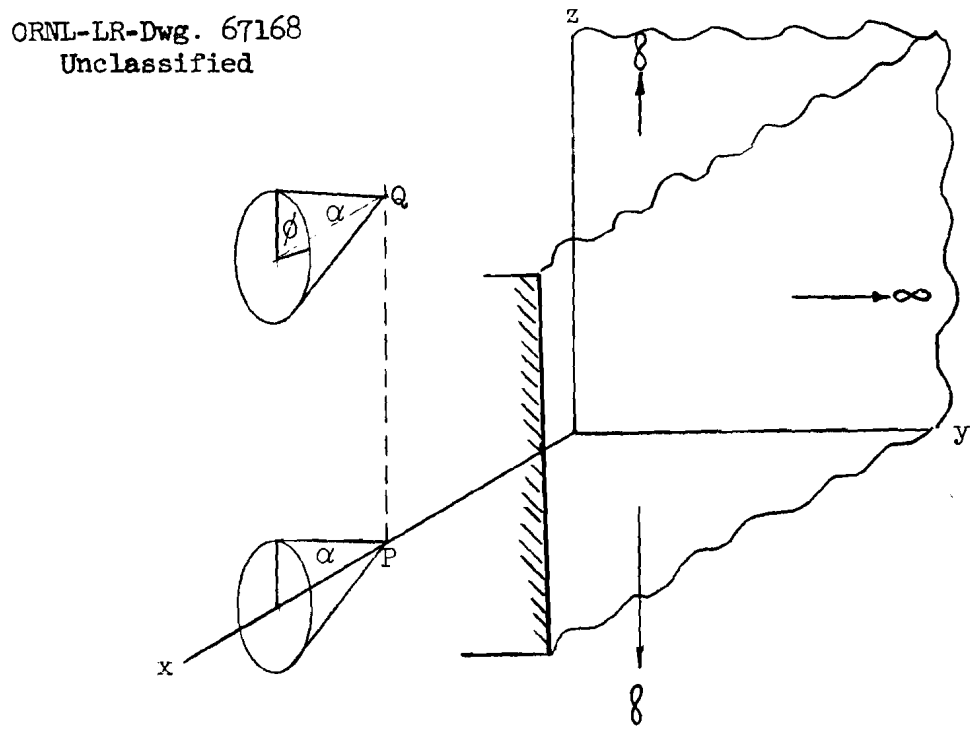

Fig. 1. Angular Flux in Slab Geometry

The total of 4π steradians of solid angle in which neutrons can move is divided into n equal parts each of size $2\pi\Delta(\cos\alpha)$, where $-1 \leqslant \cos\alpha \leqslant 1$. For the purposes of calculation, the physical picture of neutrons moving in all possible directions is replaced by a model in which the neutrons are permitted to move making one of n possible angles with the x axis. The directions are chosen by taking them at the

midpoints of the cosine increments. For instance, if two directions are used, then neutrons are supposed to travel to the right in Fig. 2 at an angle of 45 deg with the positive x direction or to the left at an angle of 135 deg with the positive x direction. If 16 directions are used, one group of neutrons is said to travel with a cosine of −13/16, etc.

ORNL-LR-Dwg. 67169
Unclassified

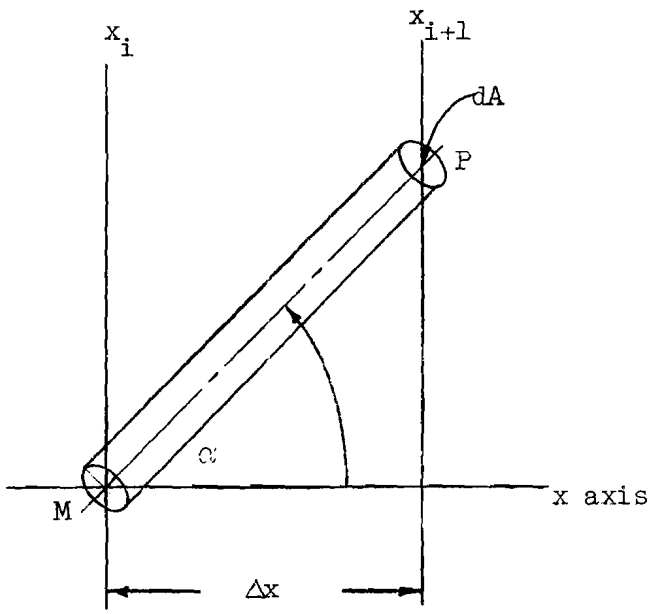

Fig. 2. Volume Element for Neutron Balance

The complete sequence would be −15/16, −13/16, −11/16, −9/16, −7/16,... adding increments of 1/8 until +15/16 is reached. An even number of angular increments is used, half on one side of a material interface and half on the other so that possible ambiguities connected with neutrons moving parallel to an interface are avoided. The interval along the x axis is divided into k parts, not necessarily equal. It is assumed that the average angular flux in a particular direction in one of these parts may be estimated by the arithmetic mean of the values for the angular flux at the ends. Alternatively, one may say that the neutrons traveling in a given range of solid angle behave on the average

like that differential fraction of them which have a direction in the center of that range. It is intuitively obvious that the accuracy of the procedure will increase as the number of both angular and space increments used increases.

The iteration equations used in the SWAPS program are based upon neutron balances taken over volume elements which are directed along the n directions and whose length is bounded by the increments along the x axis. Two energy groups are used in the present program but extension to larger number of groups is easy (in principle). Consider a neutron balance taken over the volume element shown in Fig. 2. The number of neutrons entering at M and traveling in direction μ_j is

$$N_g(x_i, \mu_j)\, dA \qquad (\mu_j = \cos^{-1}\alpha). \tag{a}$$

The number leaving at $x + \Delta x$ is

$$N_g(x_{i+1}, \mu_j)\, dA. \tag{b}$$

The number of neutrons removed from direction μ_j is taken as

$$\frac{[N_g(x_i, \mu_j) + N_g(x_{i+1}, \mu_j)]}{2}\, \Sigma_{T_g}(\Delta x/\mu_j)\, dA. \tag{c}$$

The number of neutrons scattered into direction μ_j in the volume element which were moving in other directions is

$$\sum_{p=1}^{n} \frac{[N_g(x_i, \mu_p) + N_g(x_{i+1}, \mu_p)]}{2}\, \Sigma_s(\mu_p \rightarrow \mu_j)\, \frac{\Delta x}{\mu_j}\, dA. \tag{d}$$

The number of neutrons born from fission in the volume element which take direction μ_j is

$$\lambda \chi_g \sum_{g=1}^{2} \sum_{p=1}^{n} \frac{[N_g(x_i, \mu_p) + N_g(x_{i+1}, \mu_p]}{2n}\, \nu\Sigma_{f_g}\, \frac{\Delta x}{\mu_j}\, dA. \tag{e}$$

Isotropic generation of fission neutrons is assumed. (In the present program $\chi_1 = 1.0$ and $\chi_2 = 0.0$.)

The number of neutrons scattered from the other groups into group g is

$$\sum_{p=1}^{n} \frac{N_{g'}(x_i, \mu_p) + N_{g'}(x_{i+1}, \mu_p)}{2} \Sigma_R(g' \to g, \mu_p \to \mu_j) \frac{\Delta x}{\mu_j} dA. \quad (f)$$

The balance equation for a given group, direction, and space interval, (g, μ_j, and x_i to x_{i+1}) is then, canceling the factor dA,

$$N_g(x_{i+1}, \mu_j) = N_g(x_i, \mu_j) - \frac{N_g(x_i, \mu_j) + N_g(x_{i+1}, \mu_j)}{2} \Sigma_{T_g} \frac{\Delta x}{\mu_j}$$

$$+ \sum_{p=1}^{n} \frac{N_g(x_i, \mu_p) + N_g(x_{i+1}, \mu_p)}{2} \Sigma_s(\mu_p \to \mu_j) \frac{\Delta x}{\mu_j}$$

$$+ \lambda \chi_g \sum_{g=1}^{2} \sum_{p=1}^{n} \frac{N_g(x_i, \mu_p) + N_g(x_{i+1}, \mu_p)}{2n} \nu \Sigma_{f_g} \frac{\Delta x}{\mu_j}$$

$$+ \sum_{p=1}^{n} \frac{N_{g'}(x_i, \mu_p) + N_{g'}(x_{i+1}, \mu_p)}{2} \Sigma_R(g' \to g, \mu_p \to \mu_j) \frac{\Delta x}{\mu_j}. \quad (1)$$

If there are two energy groups, n angular increments, and k space intervals, there are a total of 2nk balance equations like (1).

III. The Iterative Procedure

The iterative procedure used to find the angular flux distribution is basically the same as that used in EQUIPOISE.[1] An important modification has been made by the introduction of a form of block relaxation. The procedure consists of rewriting Eq. (1) in the form:

$$N_g^{t+1}(x_{i+1}, \mu_j) = \left(1 + \frac{\Sigma_{T_g} \Delta x}{2\mu_j}\right)^{-1} \left[N_g^{t+1}(x_i, \mu_j) \left(1 - \frac{\Sigma_{T_g} \Delta x}{2\mu_j}\right) + (d) + (e) + (f)\right], \tag{2}$$

where the superscript t refers to the iteration number. The program is written so that the most recently computed values of fluxes are always used. Equation (2) is used for the values of $\mu_j > 0$. For values of $\mu_j < 0$ the equation used is:

$$N_g^{t+1}(x_i, \mu_j) = \left(1 - \frac{\Sigma_{T_g} \Delta x}{2\mu_j}\right)^{-1} \left[N_g^{t+1}(x_{i+1}, \mu_j) \left(1 + \frac{\Sigma_{T_g} \Delta x}{2\mu_j}\right) + (d) + (e) + (f)\right] \tag{3}$$

The restriction is made that

$$\Delta x < \frac{2}{n\Sigma_T}. \tag{4}$$

The program assumes a uniform angular flux distribution initially. In eigenvalue problems, a value of λ is then estimated by adding up all the equations and solving for λ, which is equivalent to writing

$$\lambda = \frac{\text{Absorptions + Leakage}}{\text{Productions}}. \tag{5}$$

This value of λ is then used wherever applicable in the equations for one "mesh sweep". The sweep is conducted by proceeding from one side of the slab to the other and returning. The angular fluxes in all positive μ directions at point 2 are computed from those at point 1, those at 3 from those at 2, etc. On reaching the other side of the slab (point k + 1), the angular fluxes in all negative μ directions are computed at point k from those of k + 1, those at k − 1 from those at k, etc., until point 1 is reached again. When these computations have been completed for both groups, the new set of angular fluxes is used

to obtain a new estimate of λ. The process is repeated until the values of the angular flux cease to change within some preset convergence criterion.

Subject to the restriction of inequality (4), it is seen that a set of positive fluxes inserted in the right-hand side of the iteration Eqs. (2) and (3) will always produce a new set of positive fluxes. Further, use of a set of positive fluxes in (5) will always produce a positive eigenvalue estimate. The iterative procedure represented by Eqs. (2), (3), and (5), which is called here the EQUIPOISE method, is believed to be stable and always convergent because of these two facts. While no proof presently exists for this conjecture, an impressive mass of empirical evidence exists to support it.

Unlike the diffusion codes, no over-relaxation is used. It was found empirically that suitable over-relaxation coefficients were close to one and difficult to estimate accurately. (The work of Hageman[3] in this connection is of special interest.) Further, the speed of the program was sufficiently great in eigenvalue problems that there appeared to be little need to accelerate convergence. Non-eigenvalue problems, such as Milne's problem, proved to be quite another matter. The same procedure that produced convergence in 10 iterations in an eigenvalue problem appeared to converge with extreme slowness for fixed incoming current problems. This same difficulty appears in heat conduction problems as well as neutron diffusion problems. The remedy employed in SWAPS is an extremely simple but highly effective form of block relaxation. The technique consists of finding a number by which all the neutron fluxes in a given region and group* must be multiplied to provide a neutron balance. As the problem converges, this number becomes 1. The number is found as follows. Let Φ(IN) denote fluxes inside a region in a given group and Φ(OUT) denote fluxes in other adjacent regions or in the same region but other groups. The "driving factor" DF is found by obtaining the ratio

---

*In the SWAPS program, both groups were lumped together for the block relaxation procedure for simplicity.

$$DF = \frac{DF\left\{\Phi(OUT)\right\} + SD\left\{\Phi(OG)\right\}}{R\left\{\Phi(IN)\right\} + LO\left\{\Phi(IN)\right\}}, \qquad (6)$$

where

$LI\left\{\Phi(OUT)\right\}$ = the formula for calculating the current of neutrons into the region. It is a function of fluxes outside the region, $\Phi(OUT)$.

$SD\left\{\Phi(OG)\right\}$ = the formula for calculating slowing down into the group inside the region. It is a function only of fluxes in other groups, $\Phi(OG)$.

$R\left\{\Phi(IN)\right\}$ = the formula for calculating removals by absorption and slowing down inside the region. It depends only on fluxes in the group or region under consideration, $\Phi(IN)$.

$LO\left\{\Phi(IN)\right\}$ = the formula for calculating the flow of neutrons out of the region. It depends only on the fluxes inside the region.

The driving factors are used to multiply all the fluxes in a given region. It is used <u>only</u> for regions in which there is no fissionable material. (Fissionable regions are omitted because the driving factor could conceivably become negative in such regions.) In SWAPS, "driving" is done region by region in the following fashion. Suppose a 50-point reactor is composed of two materials, one of which covers points 1-17 and the other from 17-50. Region 1-17 could be divided up into two regions, 8-17 and 1-17, while the other region might be divided 38-50, 21-50, 17-50. A factor is found for points 8-17 and all fluxes in this range are multiplied by it; another factor is found for points 1-17 and all fluxes from 1 to 17 are multiplied by it. Similarly, factors are found for 38-50, 21-50, and 17-50 and superimposed on one another in the same way. Disposition and the frequency of use of the driving

regions is at the discretion of the user of the program. The authors' practice has been to use regions about 10 mean free paths thick and about every 10 iterations. There is no theoretical reason why the "driving" regions should coincide with material regions; they happen to do so in this program as a matter of convenience only. It is worth noting that in certain simple problems, the "driving" procedure, sufficiently elaborated, could lead to an exact solution to the finite difference equations in a finite number of steps. An exact solution is not obtainable, however, in more than one dimension by this means.

While the distribution of the driving function regions has been left to the user, there is nothing of a crucially optimal nature in laying out these areas. The effect of their use is to affect parts of the reactor distant from the boundaries as quickly as possible and to force a condition that must be true at convergence. This condition is that any subregion of the reactor must satisfy a neutron balance. The suggested procedure is generally applicable and should prove useful in more than one dimension, to heat conduction problems as well as to neutron diffusion problems. Problems such as Milne's problem, previously quite intractable, are now solvable in a reasonable amount of machine time.

IV. Program Speed

At the present time the program takes 0.001875 sec per point per angular increment per iteration for isotropic problems. For an anisotropic scattering problem the computing rate is 0.009 to 0.016 sec per point per iteration. These computing rates could doubtless be improved, but the present program is only a prototype and does not warrant refinements. Some statistics concerning mesh sweeps required for convergence are of interest and may be found in Table 1. Comparison with one version of DSN is also given. Cases 3 and 4 are Milne's problem cases, where it is desired to find the angular flux distribution in a very thick slab having an isotropic source on one face. The effect of using driving regions is evident.

Table 1. Convergence Rates in SWAPS and Comparison with Other Programs

Problem	Number of Mesh Points	Number of Angles	Number of "Driving Regions"	Anisotropic Scattering	Eigenvalue Problem	Convergence Level	Number of Iterations
1	100	16	5	No	Yes	6×10^{-7}	12
2	400	16	0	No	Yes	8×10^{-4}	15
3	400	4	0	No	No	2×10^{-2}	200
4	400	4	8	No	No	8×10^{-4}	90
5	300	16	0	No	Yes	1×10^{-4} [a]	8
6	Same as 5 but on DSN program					2×10^{-3} [a]	56
7	101	16	1	No	No	5×10^{-7} [b]	160
8	Same as 7 but on DSN program					10^{-5} [b]	435
9	51	16	0	Yes	Yes	2×10^{-4}	7
10	51	16	0	Yes	Yes	3×10^{-5}	7
11	51	16	0	Yes	Yes	4×10^{-5}	11
12	101	16	0	Yes	Yes	2×10^{-4}	60

[a] The type of convergence level cited is not exactly the same in SWAPS and DSN but is sufficiently close to be comparable. The number of iterations cited for DSN are inner iterations.

[b] The convergence level cited for SWAPS refers to convergence of the individual angular fluxes. The program had apparently reached the limit of machine numerical significance at this convergence level. The DSN convergence is convergence on the integral of the flux.

V. The Treatment of Anisotropic Scattering and of Anisotropy in the Cross Sections for Group-to-Group Removal

Anisotropy is accounted for by assuming that the cross section for transfer from one direction to another is a cubic polynomial in the cosine of the angle between the entering and leaving direction of the colliding neutron. It follows that if $N(x, \mu_i)$ neutrons per cm^2 per second are traveling in a cone having direction μ_i in the range $\mu_i - \Delta\mu_i/2$ to $\mu_i + \Delta\mu_i/2$, the number of such neutrons having an angle ϕ_i (see Fig. 1) which will be scattered into direction ϕ_j and μ_j per unit path length is expressed by the formula

$$\frac{N(x, \mu_i)}{2\pi\, \Delta\mu_i} \left[a_o + a_1\mu' + a_2\mu'^2 + a_3\mu'^3\right] \frac{d\phi_i\, d\phi_j\, d\mu_i\, d\mu_j}{4\pi}, \qquad (7)$$

where $\mu' = \mu_i\mu_j + \sqrt{1-\mu_i^2}\,\sqrt{1-\mu_j^2}\,\cos(\phi_i - \phi_j)$ is the cosine of the angle between the initial and final directions. If (7) is integrated over μ_i from $\mu_i - \Delta\mu_i/2$ to $\mu_i + \Delta\mu_i/2$, over μ_j from $\mu_j - \Delta\mu_j/2$ to $\mu_j + \Delta\mu_j/2$, and ϕ_i and ϕ_j from 0 to 2π, assuming $N(x, \mu_i)$ is constant over the interval of integration, there results the formula

$$\begin{aligned} N(x, \mu_i) \sum(\mu_i \to \mu_j) \;=\; & N(x, \mu_i) \frac{\Delta\mu_j}{2} \Big\{ a_o + a_1\, \mu_i\, \mu_j \\ & + a_2\left[(\mu_i^2 + \frac{\Delta\mu_i^2}{12})(\mu_j^2 + \frac{\Delta\mu_j^2}{12}) + \frac{1}{2}(1 - \mu_i^2 - \frac{\Delta\mu_i^2}{12})(1 - \mu_j^2 - \frac{\Delta\mu_j^2}{12})\right] \\ & + a_3\mu_i\mu_j\left[(\mu_i^2 + \frac{\Delta\mu_i^2}{4})(\mu_j^2 + \frac{\Delta\mu_j^2}{4}) + \frac{3}{2}(1 - \mu_i^2 - \frac{\Delta\mu_i^2}{4})(1 - \mu_j^2 - \frac{\Delta\mu_j^2}{4})\right]\Big\}, \end{aligned} \qquad (8)$$

where $\sum(\mu_i \to \mu_j)$ is the cross section for scattering from a cone having angle $\cos^{-1}\mu_i$ to a cone having an angle $\cos^{-1}\mu_j$.

The input numbers to the program which are to be employed to characterize the scattering or the removal cross sections are a_o, a_1, a_2, and a_3. Calculation of anisotropic scattering is carried out in the program according to formula (8). Note that if the scattering or removal is linear, then a_o is the total cross section for the process.

(If a P_n expansion had been used, this would have been true for any degree of non-linearly.) In SWAPS, $\Delta\mu_i = \Delta\mu_j$ and $2/\Delta\mu_i$ is the number of angular increments used.

VI. Checking the Program for Accuracy Against Known Analytic Solutions

A. Milne's Problem Comparison

The program has been checked against Milne's problem by using the case of a slab about 78 mean free paths thick with no absorption and with an isotropic plane source of neutrons at one face and zero incoming current at the other. Four angular increments were used. The emergent angular flux of the face of zero incoming current and the total flux are compared in Table 2 with results obtained by the Wiener-Hopf method.[4,5] The agreement is excellent considering that only four angular increments were used.

Table 2. Comparison of Results Obtained for Milne's Problem Using Four Angular Increments with Theoretical Answer

Distance from Boundary, Mean Free Paths	SWAPS Result	Wiener-Hopf	Percent Error
	a. Total Flux		
0	1	1	--
0.2	1.4445	1.4714	−1.8
0.4	1.8491	1.8587	−0.5
0.6	2.2320	2.2271	+0.22
0.8	2.6031	2.5868	+0.63
1.0	2.9680	2.9419	+0.89
2.0	4.7609	4.6902	+1.51
	b. Emergent Angular Flux		
$-\mu$			
0.25	0.76422	0.773	−1.1
0.75	1.23578	1.232	+0.306
$-\mu_{avg}$	0.55894	0.5774	−3.2
$-(\mu^2)_{avg}$	0.37144	0.4102	−9.4

B. Isotropic and Linear Anisotropic Scattering Eigenvalue Problems

Carlson[2] and Dresner[6] have published results concerning the critical thickness of slabs in which scattering was isotropic or linearly anisotropic. Table 3 compares the results they obtained using variational methods with those obtained using the SWAPS program.

Table 3. Comparison of Variational Estimates of Critical Thickness in Slabs with SWAPS Calculation

Total Slab Thickness, Mean Free Paths	Secondaries per Collision	
	Analytical Methods[2]	SWAPS
	a. Isotropic Scattering	
5.665	1.02	1.020
0.7366	1.4	1.400
0.3108	2.0	2.003

b. Anisotropic Scattering

$\bar{\mu} = 0.3$

where $$\bar{\mu} = \frac{\int_{-1}^{1} \mu(\nu\sigma_f + \sigma_s)\, d\mu}{\int_{-1}^{1} (\nu\sigma_f + \sigma_s)\, d\mu}$$

Total Slab Thickness, Mean Free Paths	Critical Number of Secondaries per Collision	
	Variational Estimate[6]	SWAPS[a]
0.2	3.931	3.99456
0.4	2.601	2.61314
1.0	1.667	1.67240
2.0	1.312	1.31627
4.0	1.127	1.13077
8.0	1.044	1.04641
20.0	1.009	1.00969

[a]A small amount of interpolation was used to place the answers at $\bar{\mu} = 0.3$.

C. Thermal Utilization Problem

An ad hoc version of the SWAPS code was used to solve the problem of thermal utilization in a slab lattice referred to in Table 18.4, p. 642, of Weinberg and Wigner.[4] Using 400 points and 16 angular increments, a value of 0.8557 was obtained, which is in excellent agreement with the text answer of 0.8560.

VII. Conclusions

A simple and efficient method of computing the flux distribution and critical eigenvalue in slab geometry using a numerical solution of the Boltzmann equation has been devised. The iteration procedures used should be applicable to more elaborate programs involving more energy groups and dimensions.

Table of Notation

x, y, z	Cartesian coordinates.
α	Angle between a line intersecting the x axis and the positive x direction.
Δx	Increment of distance along x axis, cm.
n	Number of intervals into which the range $-1 \leqslant \cos\alpha \leqslant 1$ is divided.
k	Number of intervals into which the thickness of the slab reactor along the x axis is divided.
μ_j	$(\cos\alpha)_j$, where the subscript j denotes one of the n angular intervals; $\Delta\mu = 2/n$.
M, P	Points in Fig. 2.
dA	Differential element of area, cm^2.
x_i	The distance along the x axis from the origin to the ith space interval, cm.
$N_g(x_i,\mu_j)$	Angular neutron flux, neutrons per cm^2 per second moving in direction μ_j at point x_i in neutron velocity group g.
Σ_{T_g}	Total cross section for group g, reciprocal centimeters.
$\Sigma_s(\mu_p \rightarrow \mu_j)$	Cross section for scattering from direction μ_p into direction μ_j.
ν	Number of neutrons produced per fission.
λ	Eigenvalue; the number by which ν must be multiplied to make an assembly critical; the reciprocal of the effective multiplication constant.
χ_g	The fraction of neutrons generated by fission which are born into group g. In the present program $\chi_1 = 1.0$ and $\chi_2 = 0.0$.
Σ_{f_g}	Fission cross section for group g, reciprocal centimeters.
$\Sigma_R(g' \rightarrow g, \mu_p \rightarrow \mu_j)$	Removal cross section from group g' to g from direction μ_p into direction μ_j.
μ'	Cosine of the angle between the initial and final directions of a neutron which has undergone a scattering collision.
ϕ	The angle made by the projection of the direction of neutron motion upon the y-z plane with the positive z direction.

APPENDIX

Code Operation

SWAPS was programmed in FORTRAN to be run under control of the IBM-7090 FORTRAN Monitor System. The only tapes used by the program are tape 9 for output and tape 10 for input.

Input

Figure A.2 is a SWAPS input form filled out for the sample problem. In the instructions given below, the number formats are given in FORTRAN nomenclature and are written in parenthesis immediately following the input number symbol.

Card 1 – Title Card

Column 1 – blank.

Columns 2 through 72 – any desired information.

Card 2 – Control Card

Columns 1 through 3 – ANG(I3) $\leqq$ 16: number of angles for which the fluxes are to be computed.

Columns 4 through 6 – PTS(I3) $\leqq$ 400: total number of points. The mesh runs from left to right beginning with 1 for the left-most point and ending with PTS.

Columns 7 through 9 – REG(I3) $\leqq$ 100: the number of regions into which the mesh is divided.

Columns 10 through 12 – MAT(I3) $\leqq$ 20: the number of different materials that are specified below.

Columns 13 through 15 – LBI(I3): left-hand boundary condition indicator. If LBI is 0 or blank, the left-hand boundary is a zero return current boundary. If LBI is +1, the left-hand boundary is a zero net current boundary. A –1 for LBI specifies an arbitrary incoming current boundary condition which is specified below.

Columns 16 through 18 – RBI(I3): right-hand boundary condition indicator. The right-hand boundary conditions are specified in the

same manner as that given above for the left boundary.

Columns 19 through 21 – FXI(I3): previous flux indicator. If FXI is a 0 or blank, the code supplies an initial flat flux guess. A +1 for FXI indicates that the initial flux guess is taken from the preceding problem. The preceding problem must have the same number of points and angles, and the same boundary conditions as this problem.

Columns 22 through 24 – ITR(I3): the total number of iterations the problem is to be run. If a problem has not converged before ITR is reached, it is terminated automatically and the normal output is written. Most problems converge in fewer than 100 iterations.

Columns 25 through 27 – DRV(I3): the block relaxation iteration cycle. The calculation proceeds normally (point relaxation) for DRV iterations, at which time the block relaxation procedure is applied to all specified (see below) non-source regions. This cycle is repeated until the problem reaches convergence. A value of 10 appears to be reasonable for this number.

Columns 28 through 30 – OUT(I3): output information indicator. Convergence information, the eigenvalue, the total flux at each mesh point, and the neutron balance are always printed out. OUT indicates other output that may be desired. A 0 or blank for this number indicates no additional output. If OUT is +1, the directional fluxes will be included in the output. If OUT is –1, the directional fluxes plus the angular dependent macroscopic removal and scattering cross sections will be printed out.

Columns 31 through 48 – FACTOR(E12.6): normalization factor. For output, the total fluxes are normalized by multiplying each flux value by FACTOR/S, where S is the total source,

$$S = \sum_{g} \sum_{x_i} \sum_{\mu_j} \nu\Sigma_{f_g} \left[N_g(x_i, \mu_j) + N_g(x_{i+1}, \mu_j)\right] \frac{\Delta x}{2}.$$

The angular dependent fluxes are not normalized for output.

Columns 49 through 52 – EPI(E10.4): convergence criterion. The calculation stops when both of the following conditions are satisfied.

$$\left| \frac{\lambda^{t\text{-DRV}}}{\lambda^{t}} - 1.0 \right| < \text{EPI, and}$$

$$\left| \frac{N_g^{t-1}(x_i, \mu_j)}{N_g^{t}(x_i, \mu_j)} - 1.0 \right|_{max} < \text{EPI},$$

where t is the iteration number and DRV is as defined above.

Columns 53 through 62, and 63 through 72 – β_1(E10.4), and β_2(E10.4): extrapolated Liebmann coefficients for groups 1 and 2. If these numbers are 0 or blank, the code uses values of 1.0 for β_1 and β_2; otherwise, the input values are used. It is strongly recommended that these numbers be left blank for input.

Cards 3 and 4

These two cards are used to specify values of constant incoming angular fluxes if LBI (Control Card) is –1. If LBI is 0 or +1, omit these cards.

Columns 1 through 9, 10 through 18, etc., supply values of the group 1 angular fluxes (E9.5) for all $\mu_j > 0$ using card 3. Repeat for group 2 using card 4. For a two angle problem, only one number on each card would be written in columns 1 through 9 corresponding to the constant angular flux for μ_2. For a six angle problem, three numbers corresponding to μ_4, μ_5, and μ_6 would be written in columns 1 through 27 for each group.

Cards 5 and 6

These two cards are used only if RBI is –1. In this case the numbers are specified as above and apply to the right boundary. These angular fluxes correspond to all $\mu_j < 0$.

Cards 7+ – Mesh Specification Cards

The regions are specified beginning with region number 1 (the left-most region) and ending with region number REG (the right-most region).

Each card specifies three regions.

Columns 1 through 3 – LPT(I3): left mesh point number of the region.

Columns 4 through 6 – RPT(I3): right mesh point number of the region.

Columns 7 through 9 – SUB(I3): subregions for block relaxation. This number may be ignored for regions which have a value of $\nu\Sigma_f$. For regions which have no fissionable material, a 0 or blank for SUB specifies that this region is not to be "driven". If SUB > 0, the region will be divided into SUB subregions and the "driving factors" computed and applied as described earlier. SUB must be less than RPT - LPT.

Columns 10 through 12 – MNO(I3): material number of the region. The material constants are specified below and are numbered from 1 to MAT.

Columns 13 through 24 – REG WIDTH(E12.8): the total width of the region. The restriction on this number is

$$\frac{(\text{REG WIDTH})}{(\text{RPT} - \text{LPT})} < \frac{2}{\text{ANG}[\Sigma_{T_g}(\text{Reg})]}.$$

Repeat the above specifications using columns 25 through 48 and columns 49 through 72 for the next two regions, and continue with the next card until all regions have been specified.

Cards 8 and 9+ – Material Specification Cards

Two cards are required to specify the constants for each different material and group. For the first card, specify:

Columns 1 through 3 – MAT NO(I3): material number. The materials are numbered beginning with 1 and ending with MAT; however, the pairs of cards specifying each material and group may be in any order in the deck.

Columns 4 through 6 – GRP NO(I3): the group number.

Columns 8 through 16 – Σ_a(E10.6): the macroscopic absorption cross section for this material and group.

Columns 17 through 26 – $\nu\Sigma_f$(E10.6): ν times the macroscopic fission cross sections for this material group.

For the second card of the pair specify:

Columns 1-9, 10-18, 19-27, 28-36 – R_o, R_1, R_2, R_3(E9.5): the constants used in Eq. (8) to compute the angular dependent removal cross section ($\Sigma_R(g' \rightarrow g, \mu_p \rightarrow \mu_j)$) for this material and group.

Columns 37-45, 46-54, 55-63, 64-72 – S_o, S_1, S_2, S_3(E9.5): the constants used in Eq. (8) to compute the angular dependent scattering cross section ($\Sigma_s(\mu_p \rightarrow \mu_j)$) for this material and group. If $R_1 = R_2 = R_3 = S_1 = S_2 = S_3 = 0$, then the problem is assumed to be isotropic and the angular independent removal and scattering cross section are computed by:

$$\Sigma_R(g', \mu_i \rightarrow g, \mu_j) = R_o/ANG,$$

$$\Sigma_s(\mu_i \rightarrow \mu_j) = S_o/ANG.$$

Successive Cases

Successive cases may be run simply by stacking the case data decks. To end the calculation, follow the data deck with two blank cards.

Sample Problem

The diagram of the sample is shown in Fig. A.1. The sample problem input is shown in Fig. A.2, and the output is shown in Fig. A.3.

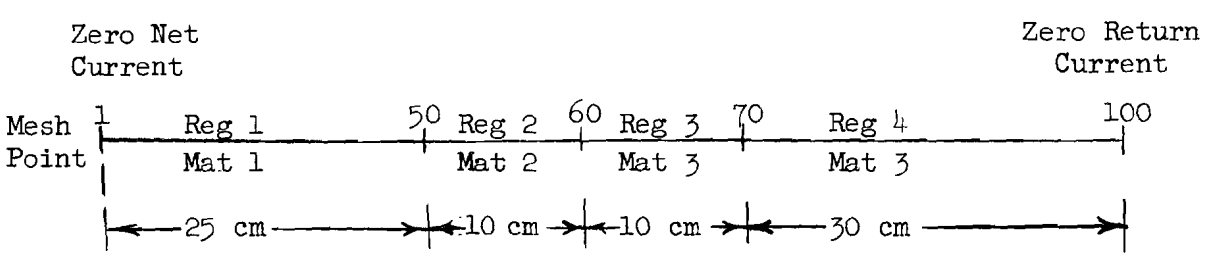

Fig. A.1. Diagram of Sample Problem

KEYPUNCHING INSTRUCTIONS
Punch only those cards having data in columns 73-80

SWAPS INPUT FORM - I

REQUEST No.

1 TITLE	73 80
SWAPS CODE SAMPLE PROBLEM FOR REPORT	01

ANG 1	PTS 4	REG 7	MAT 10	LBI 13	RBI 16	FXI 19	ITR 22	DRV 25	OUT 28	FACTOR 31	EPI 43	β_1 53	β_2 63	73 80
6	100	4	3	1	0	0	50	2	-01	10	0 00001			02

FIXED χ INCOMING FLUX AT LEFT BOUNDARY ($\mu_i > 0$) - CARD 1 for Group 1, CARD 2 for Group 2 → FORMAT (8E9.5)

1	10	19	28	37	46	55	64	73 80

FIXED χ INCOMING FLUX AT RIGHT BOUNDARY ($\mu_i < 0$) - CARD 1 for Group 1, CARD 2 for Group 2 → FORMAT (8E9.5)

1	10	19	28	37	46	55	64	73 80

LPT 1	RPT 4	SUB 7	MNO 10	REG WIDTH 13	LPT 25	RPT 28	SUB 31	MNO 34	REG WIDTH 37	LPT 49	RPT 52	SUB 55	MNO 58	REG WIDTH 61	73 80
1	50	0	1	25.0	50	60	2	2	10.0	60	70	2	3	10.0	03
70	100	3	2	30.0											04

Fig. A.2. Input for Sample Problem

KEYPUNCHING INSTRUCTIONS
Punch only those cards having data in columns 73-80

SWAPS INPUT FORM - 2

REQUEST No

2 CARDS PER MATERIAL-Grp
CARD 1 → MAT. No, GRP. No, Σ_a, $\nu\Sigma_f$, → FORMAT (2I3, 2E10.6)
CARD 2 → R_0, R_1, R_2, R_3, S_0, S_1, S_2, S_3 → FORMAT (8 E 9.5)

1	4	7	17	27	73	80
1	1	0.00011	0.00021			05
1.1		-04 2.1	-05 3.1	-06 4.1 -07 1.1 -04 1.2 -05 1.3 -06 1.4 -07		06
1	2	0.00022	0.0042			07
1.2		-04 2.2	-05 3.2	-06 4.2 -07 1.2 -04 1.4 -05 1.6 -06 1.8 -07		08
2	1	0.0021	0.0			09
3.1		-03 0.0	0.0	0.0 3.2 -03 0.0 0.0 0.0		10
2	2	0.0032	0.0			11
3.2		-03 0.0	0.0	0.0 3.3 -03 0.0 0.0 0.0		12
3	1	0.000031	0.0			13
4.4		-04 5.4	-05 0.0	0.0 5.4 -04 6.4 -05 0.0 0.0		14
3	2	0.000062	0.0			15
6.4		-04 7.4	-05 0.0	0.0 8.4 -03 0.0 0.0 0.0		16
						END
						END

Fig. A.2 (continued)

SWAPS CODE SAMPLE PROBLEM FOR REPORT

REACTOR SPECIFICATIONS

S(6) CALC 100 MESH PTS 4 REG 3 COMP BND(1, 0) NORM 1.0000E 00 EPI 10.0000E-06 BETA1 1.000 BETA2 1.00

LENGTH 7.5000E 01

REGION SPECIFICATIONS

JLFT	JRIT	COMP	REG WIDTH	MESH WIDTH
1	50	1	2.5000E 01	5.1020E-01
50	60	2	1.0000E 01	1.0000E 00
60	70	3	1.0000E 01	1.0000E 00
70	100	2	3.0000E 01	1.0000E 00

COMPOSITION SPECIFICATIONS

COMP	GRP	SIGA	NUXSIGF	A0(SIGR)	A1(SIGR)	A2(SIGR)	A3(SIGR)	A0(SIGS)	A1(SIGS)	A2(SIGS)	A3(SIGS)
1	1	1.100E-04	2.100E-04	1.833E-05	3.500E-06	5.167E-07	6.833E-08	1.833E-05	2.000E-06	2.167E-07	2.33E-08
	2	2.200E-04	4.200E-03	2.000E-05	3.667E-06	5.333E-07	7.000E-08	2.000E-05	2.333E-06	2.667E-07	3.00E-08
2	1	2.100E-03	0.	5.167E-04	0.	0.	0.	5.333E-04	0.	0.	0.
	2	3.200E-03	0.	5.333E-04	0.	0.	0.	5.500E-04	0.	0.	0.
3	1	3.100E-05	0.	7.333E-05	9.000E-06	0.	0.	9.000E-05	1.067E-05	0.	0.
	2	6.200E-05	0.	1.067E-04	1.233E-05	0.	0.	1.400E-03	0.	0.	0.

Fig. A.3. Output for Sample Problem

SWAPS CODE SAMPLE PROBLEM FOR REPORT

CONVERGENCE LEVELS EVERY 2 ITERATION

ITER	FLUX CONVR	LAMBDA CONVR	LAMBDA	DRIVE REG	SUB REG	SUBREG BNDS	DRIVE FACTOR
2	1.1600E 00	9.0076E-01	1.0076E 01				
				4	1	(90,100)	9.82945E-01
				4	2	(80,100)	9.79149E-01
				4	3	(70,100)	9.77569E-01
				3	1	(65, 70)	9.86964E-01
				3	2	(60, 70)	9.86815E-01
				2	1	(55, 60)	9.87801E-01
				2	2	(50, 60)	9.88382E-01
4	1.3931E-01	1.4655E-01	1.1807E 01				
				4	1	(90,100)	9.98857E-01
				4	2	(80,100)	9.98482E-01
				4	3	(70,100)	9.98173E-01
				3	1	(65, 70)	9.99132E-01
				3	2	(60, 70)	9.99211E-01
				2	1	(55, 60)	9.99083E-01
				2	2	(50, 60)	9.98969E-01
6	1.4026E-02	1.6859E-02	1.2009E 01				
				4	1	(90,100)	9.99877E-01
				4	2	(80,100)	9.99835E-01
				4	3	(70,100)	9.99800E-01
				3	1	(65, 70)	9.99910E-01
				3	2	(60, 70)	9.99921E-01
				2	1	(55, 60)	9.99895E-01
				2	2	(50, 60)	9.99887E-01
8	1.4039E-03	1.8787E-03	1.2032E 01				
				4	1	(90,100)	9.99986E-01
				4	2	(80,100)	9.99981E-01
				4	3	(70,100)	9.99977E-01
				3	1	(65, 70)	9.99990E-01
				3	2	(60, 70)	9.99992E-01
				2	1	(55, 60)	9.99988E-01
				2	2	(50, 60)	9.99987E-01
10	2.0367E-04	2.1282E-04	1.2034E 01				
				4	1	(90,100)	9.99998E-01
				4	2	(80,100)	9.99998E-01
				4	3	(70,100)	9.99997E-01
				3	1	(65, 70)	9.99999E-01
				3	2	(60, 70)	9.99999E-01
				2	1	(55, 60)	9.99999E-01
				2	2	(50, 60)	9.99999E-01
12	3.0912E-05	2.4877E-05	1.2035E 01				
				4	1	(90,100)	10.00000E-01
				4	2	(80,100)	10.00000E-01
				4	3	(70,100)	10.00000E-01
				3	1	(65, 70)	10.00000E-01
				3	2	(60, 70)	10.00000E-01
				2	1	(55, 60)	10.00000E-01
				2	2	(50, 60)	10.00000E-01
14	5.5209E-06	2.9355E-06	1.2035E 01				

Fig. A.3 (continued)

```
APS CODE SAMPLE PROBLEM FOR REPORT

AST FLUX(J),J#1,100          NORMALIZATION FACTOR 7.0930E-02

4.4186E 01  4.4186E 01  4.4185E 01  4.4184E 01  4.4182E 01  4.4179E 01  4.4176E 01  4.4173E 01  4.4168E 01
4.4164E 01  4.4159E 01  4.4153E 01  4.4146E 01  4.4140E 01  4.4132E 01  4.4124E 01  4.4116E 01  4.4107E 01
4.4097E 01  4.4087E 01  4.4076E 01  4.4065E 01  4.4053E 01  4.4041E 01  4.4028E 01  4.4014E 01  4.4000E 01
4.3986E 01  4.3971E 01  4.3955E 01  4.3939E 01  4.3922E 01  4.3905E 01  4.3887E 01  4.3868E 01  4.3849E 01
4.3830E 01  4.3810E 01  4.3789E 01  4.3768E 01  4.3746E 01  4.3724E 01  4.3701E 01  4.3678E 01  4.3654E 01
4.3630E 01  4.3605E 01  4.3579E 01  4.3553E 01  4.3526E 01  4.2212E 01  4.0949E 01  3.9735E 01  3.8567E 01
3.7444E 01  3.6364E 01  3.5324E 01  3.4323E 01  3.3359E 01  3.2430E 01  3.2322E 01  3.2213E 01  3.2105E 01
3.1998E 01  3.1890E 01  3.1783E 01  3.1677E 01  3.1571E 01  3.1465E 01  3.1360E 01  3.0496E 01  2.9663E 01
2.8859E 01  2.8083E 01  2.7334E 01  2.6610E 01  2.5911E 01  2.5234E 01  2.4580E 01  2.3946E 01  2.3333E 01
2.2739E 01  2.2163E 01  2.1604E 01  2.1062E 01  2.0535E 01  2.0024E 01  1.9527E 01  1.9043E 01  1.8573E 01
1.8114E 01  1.7668E 01  1.7232E 01  1.6807E 01  1.6392E 01  1.5986E 01  1.5589E 01  1.5200E 01  1.4819E 01
1.4446E 01
```

Fig. A.3 (continued)

SWAPS CODE SAMPLE PROBLEM FOR REPORT

SLOW FLUX(J),J#1,100 NORMALIZATION FACTOR 7.09307E-02

7.3251E 00	7.3251E 00	7.3251E 00	7.3252E 00	7.3252E 00	7.3252E 00	7.3252E 00	7.3252E 00	7.3252E 00
7.3252E 00	7.3252E 00	7.3252E 00	7.3252E 00	7.3252E 00	7.3252E 00	7.3252E 00	7.3253E 00	7.3253E 00
7.3253E 00	7.3253E 00	7.3253E 00	7.3253E 00	7.3254E 00	7.3254E 00	7.3254E 00	7.3254E 00	7.3255E 00
7.3255E 00	7.3255E 00	7.3255E 00	7.3256E 00	7.3256E 00	7.3256E 00	7.3256E 00	7.3257E 00	7.3257E 00
7.3257E 00	7.3258E 00	7.3258E 00	7.3258E 00	7.3259E 00	7.3259E 00	7.3260E 00	7.3260E 00	7.3260E 00
7.3261E 00	7.3261E 00	7.3262E 00	7.3262E 00	7.3263E 00	7.3190E 00	7.3044E 00	7.2829E 00	7.2549E 00
7.2209E 00	7.1813E 00	7.1365E 00	7.0867E 00	7.0322E 00	6.9735E 00	6.9178E 00	6.8640E 00	6.8118E 00
6.7613E 00	6.7124E 00	6.6651E 00	6.6193E 00	6.5751E 00	6.5322E 00	6.4908E 00	6.4447E 00	6.3943E 00
6.3399E 00	6.2817E 00	6.2200E 00	6.1550E 00	6.0868E 00	6.0156E 00	5.9416E 00	5.8649E 00	5.7856E 00
5.7039E 00	5.6198E 00	5.5335E 00	5.4450E 00	5.3543E 00	5.2616E 00	5.1668E 00	5.0701E 00	4.9713E 00
4.8706E 00	4.7679E 00	4.6632E 00	4.5566E 00	4.4479E 00	4.3372E 00	4.2244E 00	4.1095E 00	3.9924E 00
3.8730E 00								

Fig. A.3. (continued)

SWAPS CODE SAMPLE PROBLEM FOR REPORT

NEUTRON BALANCE

REGION ABSORPTIONS AND PRODUCTIONS

REG	FAST ABSORP	SLOW ABSORP	FAST PROD	SLOW PROD	TOTAL
1	1.20907E-01	4.02903E-02	2.30822E-01	7.69178E-01	1.16120E 00
2	7.90132E-01	2.30300E-01	0.	0.	1.02043E 00
3	9.88650E-03	4.16586E-03	0.	0.	1.40524E-02
4	1.36506E 00	5.14586E-01	0.	0.	1.87965E 00
TOTALS	2.28598E 00	7.89342E-01	2.30822E-01	7.69178E-01	4.07533E 00

BOUNDARY LEAKAGES

	FAST LEAK	SLOW LEAK	TOTAL
LFT	0.	0.	0.
RIT	7.11485E 00	1.84444E 00	8.95929E 00
TOTALS	7.11485E 00	1.84444E 00	8.95929E 00

Fig. A.3 (continued)

SWAPS CODE SAMPLE PROBLEM FOR REPORT

DIRECTIONAL FAST FLUX(MU,J),J#1,100

MU(1)

4.4190E 01	4.3497E 01	4.2804E 01	4.2111E 01	4.1418E 01	4.0725E 01	4.0031E 01	3.9338E 01	3.8644E 01
3.7951E 01	3.7257E 01	3.6563E 01	3.5869E 01	3.5175E 01	3.4480E 01	3.3786E 01	3.3092E 01	3.2397E 01
3.1702E 01	3.1007E 01	3.0313E 01	2.9618E 01	2.8922E 01	2.8227E 01	2.7532E 01	2.6837E 01	2.6141E 01
2.5446E 01	2.4750E 01	2.4054E 01	2.3358E 01	2.2663E 01	2.1967E 01	2.1271E 01	2.0575E 01	1.9878E 01
1.9182E 01	1.8486E 01	1.7790E 01	1.7093E 01	1.6397E 01	1.5700E 01	1.5004E 01	1.4307E 01	1.3610E 01
1.2914E 01	1.2217E 01	1.1520E 01	1.0823E 01	1.0126E 01	9.7736E 00	9.4292E 00	9.0927E 00	8.7639E 00
8.4424E 00	8.1280E 00	7.8203E 00	7.5193E 00	7.2245E 00	6.9359E 00	6.8641E 00	6.8325E 00	6.7811E 00
6.7299E 00	6.6789E 00	6.6281E 00	6.5774E 00	6.5270E 00	6.4767E 00	6.4266E 00	6.1526E 00	5.8839E 00
5.6204E 00	5.3620E 00	5.1083E 00	4.8594E 00	4.6149E 00	4.3749E 00	4.1391E 00	3.9075E 00	3.6799E 00
3.4562E 00	3.2362E 00	3.0200E 00	2.8074E 00	2.5982E 00	2.3925E 00	2.1901E 00	1.9910E 00	1.7951E 00
1.6023E 00	1.4126E 00	1.2259E 00	1.0421E 00	8.6134E-01	6.8343E-01	5.0836E-01	3.3612E-01	1.6667E-01
0.								

MU(2)

7.1736E 01	7.0590E 01	6.9445E 01	6.8299E 01	6.7152E 01	6.6006E 01	6.4859E 01	6.3711E 01	6.2563E 01
6.1415E 01	6.0266E 01	5.9118E 01	5.7968E 01	5.6819E 01	5.5669E 01	5.4518E 01	5.3368E 01	5.2217E 01
5.1066E 01	4.9914E 01	4.8762E 01	4.7610E 01	4.6457E 01	4.5304E 01	4.4151E 01	4.2998E 01	4.1844E 01
4.0690E 01	3.9536E 01	3.8381E 01	3.7226E 01	3.6071E 01	3.4915E 01	3.3759E 01	3.2603E 01	3.1447E 01
3.0290E 01	2.9133E 01	2.7976E 01	2.6819E 01	2.5661E 01	2.4503E 01	2.3345E 01	2.2187E 01	2.1028E 01
1.9869E 01	1.8710E 01	1.7550E 01	1.6391E 01	1.5231E 01	1.4728E 01	1.4236E 01	1.3755E 01	1.3284E 01
1.2823E 01	1.2371E 01	1.1928E 01	1.1495E 01	1.1069E 01	1.0652E 01	1.0572E 01	1.0492E 01	1.0413E 01
1.0333E 01	1.0255E 01	1.0176E 01	1.0098E 01	1.0019E 01	9.9416E 00	9.8640E 00	9.4640E 00	9.0708E 00
8.6841E 00	8.3038E 00	7.9294E 00	7.5609E 00	7.1979E 00	6.8403E 00	6.4878E 00	6.1402E 00	5.7974E 00
5.4591E 00	5.1253E 00	4.7957E 00	4.4702E 00	4.1486E 00	3.8308E 00	3.5167E 00	3.2062E 00	2.8992E 00
2.5955E 00	2.2950E 00	1.9978E 00	1.7036E 00	1.4124E 00	1.1242E 00	8.3894E-01	5.5650E-01	2.7686E-01
0.								

MU(3)

1.9555E 02	1.9224E 02	1.8892E 02	1.8560E 02	1.8228E 02	1.7896E 02	1.7563E 02	1.7230E 02	1.6896E 02
1.6563E 02	1.6229E 02	1.5894E 02	1.5559E 02	1.5224E 02	1.4889E 02	1.4553E 02	1.4217E 02	1.3881E 02
1.3544E 02	1.3207E 02	1.2870E 02	1.2532E 02	1.2194E 02	1.1855E 02	1.1517E 02	1.1178E 02	1.0839E 02
1.0499E 02	1.0159E 02	9.8188E 01	9.4782E 01	9.1373E 01	8.7962E 01	8.4547E 01	8.1128E 01	7.7707E 01
7.4283E 01	7.0855E 01	6.7425E 01	6.3991E 01	6.0554E 01	5.7114E 01	5.3671E 01	5.0225E 01	4.6776E 01
4.3324E 01	3.9869E 01	3.6411E 01	3.2950E 01	2.9485E 01	2.8687E 01	2.7907E 01	2.7146E 01	2.6401E 01
2.5672E 01	2.4958E 01	2.4258E 01	2.3572E 01	2.2898E 01	2.2235E 01	2.2062E 01	2.1889E 01	2.1716E 01
2.1544E 01	2.1372E 01	2.1200E 01	2.1028E 01	2.0857E 01	2.0685E 01	2.0514E 01	1.9844E 01	1.9181E 01
1.8523E 01	1.7871E 01	1.7224E 01	1.6579E 01	1.5938E 01	1.5298E 01	1.4660E 01	1.4022E 01	1.3383E 01
1.2743E 01	1.2101E 01	1.1456E 01	1.0807E 01	1.0153E 01	9.4937E 00	8.8280E 00	8.1550E 00	7.4739E 00
6.7836E 00	6.0833E 00	5.3720E 00	4.6487E 00	3.9124E 00	3.1622E 00	2.3970E 00	1.6156E 00	8.1698E-01
0.								

MU(4)

1.9555E 02	1.9886E 02	2.0216E 02	2.0546E 02	2.0876E 02	2.1205E 02	2.1534E 02	2.1863E 02	2.2192E 02
2.2520E 02	2.2847E 02	2.3175E 02	2.3502E 02	2.3829E 02	2.4155E 02	2.4481E 02	2.4807E 02	2.5132E 02
2.5457E 02	2.5782E 02	2.6106E 02	2.6430E 02	2.6753E 02	2.7077E 02	2.7400E 02	2.7722E 02	2.8044E 02
2.8366E 02	2.8688E 02	2.9009E 02	2.9330E 02	2.9650E 02	2.9970E 02	3.0290E 02	3.0609E 02	3.0928E 02
3.1247E 02	3.1565E 02	3.1883E 02	3.2200E 02	3.2518E 02	3.2834E 02	3.3151E 02	3.3467E 02	3.3783E 02
3.4098E 02	3.4413E 02	3.4728E 02	3.5042E 02	3.5356E 02	3.3839E 02	3.2390E 02	3.1008E 02	2.9687E 02
2.8427E 02	2.7224E 02	2.6075E 02	2.4977E 02	2.3929E 02	2.2928E 02	2.2821E 02	2.2714E 02	2.2607E 02
2.2501E 02	2.2395E 02	2.2290E 02	2.2186E 02	2.2082E 02	2.1978E 02	2.1875E 02	2.0964E 02	2.0094E 02
1.9263E 02	1.8469E 02	1.7711E 02	1.6986E 02	1.6293E 02	1.5631E 02	1.4999E 02	1.4394E 02	1.3816E 02
1.3264E 02	1.2735E 02	1.2230E 02	1.1747E 02	1.1285E 02	1.0843E 02	1.0419E 02	1.0015E 02	9.6272E 01
9.2563E 01	8.9011E 01	8.5611E 01	8.2354E 01	7.9234E 01	7.6244E 01	7.3379E 01	7.0633E 01	6.7999E 01
6.5473E 01								

Fig. A.3 (continued)

MU(5)

7.1736E 01	7.2880E 01	7.4025E 01	7.5169E 01	7.6313E 01	7.7456E 01	7.8599E 01	7.9741E 01	8.0883E 01
8.2025E 01	8.3166E 01	8.4307E 01	8.5448E 01	8.6588E 01	8.7727E 01	8.8866E 01	9.0005E 01	9.1143E 01
9.2281E 01	9.3419E 01	9.4556E 01	9.5692E 01	9.6828E 01	9.7964E 01	9.9099E 01	1.0023E 02	1.0137E 02
1.0250E 02	1.0363E 02	1.0477E 02	1.0590E 02	1.0703E 02	1.0816E 02	1.0929E 02	1.1042E 02	1.1155E 02
1.1268E 02	1.1381E 02	1.1494E 02	1.1607E 02	1.1720E 02	1.1832E 02	1.1945E 02	1.2058E 02	1.2170E 02
1.2283E 02	1.2395E 02	1.2507E 02	1.2620E 02	1.2732E 02	1.2595E 02	1.2468E 02	1.2321E 02	1.2185E 02
1.2050E 02	1.1915E 02	1.1780E 02	1.1647E 02	1.1514E 02	1.1381E 02	1.1369E 02	1.1356E 02	1.1344E 02
1.1331E 02	1.1318E 02	1.1306E 02	1.1293E 02	1.1281E 02	1.1268E 02	1.1255E 02	1.1123E 02	1.0993E 02
1.0863E 02	1.0733E 02	1.0605E 02	1.0478E 02	1.0352E 02	1.0226E 02	1.0102E 02	9.9788E 01	9.8565E 01
9.7352E 01	9.6150E 01	9.4957E 01	9.3775E 01	9.2604E 01	9.1442E 01	9.0292E 01	8.9151E 01	8.8021E 01
8.6902E 01	8.5793E 01	8.4694E 01	8.3606E 01	8.2527E 01	8.1459E 01	8.0402E 01	7.9354E 01	7.8316E 01
7.7288E 01								

MU(6)

4.4190E 01	4.4882E 01	4.5574E 01	4.6267E 01	4.6959E 01	4.7651E 01	4.8343E 01	4.9034E 01	4.9726E 01
5.0417E 01	5.1108E 01	5.1799E 01	5.2490E 01	5.3181E 01	5.3872E 01	5.4562E 01	5.5252E 01	5.5942E 01
5.6632E 01	5.7322E 01	5.8012E 01	5.8701E 01	5.9390E 01	6.0079E 01	6.0768E 01	6.1457E 01	6.2145E 01
6.2834E 01	6.3522E 01	6.4210E 01	6.4897E 01	6.5585E 01	6.6272E 01	6.6959E 01	6.7646E 01	6.8333E 01
6.9019E 01	6.9706E 01	7.0392E 01	7.1077E 01	7.1763E 01	7.2449E 01	7.3134E 01	7.3819E 01	7.4504E 01
7.5188E 01	7.5872E 01	7.6557E 01	7.7240E 01	7.7924E 01	7.7593E 01	7.7254E 01	7.6907E 01	7.6552E 01
7.6190E 01	7.5822E 01	7.5448E 01	7.5068E 01	7.4682E 01	7.4291E 01	7.4264E 01	7.4238E 01	7.4210E 01
7.4183E 01	7.4156E 01	7.4128E 01	7.4100E 01	7.4072E 01	7.4043E 01	7.4015E 01	7.3608E 01	7.3198E 01
7.2783E 01	7.2366E 01	7.1945E 01	7.1521E 01	7.1094E 01	7.0665E 01	7.0234E 01	6.9800E 01	6.9365E 01
6.8927E 01	6.8488E 01	6.8048E 01	6.7606E 01	6.7163E 01	6.6719E 01	6.6275E 01	6.5829E 01	6.5383E 01
6.4936E 01	6.4488E 01	6.4041E 01	6.3593E 01	6.3144E 01	6.2696E 01	6.2247E 01	6.1798E 01	6.1350E 01
6.0901E 01								

Fig. A.3 (continued)

SWAPS CODE SAMPLE PROBLEM FOR REPORT

DIRECTIONAL SLOW FLUX(MU,J),J#1,100

MU(1)

1.0600E 01	1.0594E 01	1.0589E 01	1.0584E 01	1.0578E 01	1.0573E 01	1.0568E 01	1.0562E 01	1.0557E 01
1.0552E 01	1.0547E 01	1.0541E 01	1.0536E 01	1.0531E 01	1.0526E 01	1.0520E 01	1.0515E 01	1.0510E 01
1.0505E 01	1.0499E 01	1.0494E 01	1.0489E 01	1.0484E 01	1.0479E 01	1.0474E 01	1.0468E 01	1.0463E 01
1.0458E 01	1.0453E 01	1.0448E 01	1.0443E 01	1.0437E 01	1.0432E 01	1.0427E 01	1.0422E 01	1.0417E 01
1.0412E 01	1.0407E 01	1.0402E 01	1.0397E 01	1.0392E 01	1.0387E 01	1.0382E 01	1.0376E 01	1.0371E 01
1.0366E 01	1.0361E 01	1.0356E 01	1.0351E 01	1.0346E 01	1.0022E 01	9.7055E 00	9.3961E 00	9.0939E 00
8.7985E 00	8.5096E 00	8.2271E 00	7.9507E 00	7.6802E 00	7.4154E 00	7.2923E 00	7.1693E 00	7.0464E 00
6.9234E 00	6.8005E 00	6.6774E 00	6.5543E 00	6.4309E 00	6.3075E 00	6.1837E 00	5.9237E 00	5.6685E 00
5.4180E 00	5.1721E 00	4.9305E 00	4.6932E 00	4.4599E 00	4.2307E 00	4.0053E 00	3.7836E 00	3.5655E 00
3.3510E 00	3.1398E 00	2.9320E 00	2.7274E 00	2.5259E 00	2.3275E 00	2.1321E 00	1.9396E 00	1.7500E 00
1.5631E 00	1.3790E 00	1.1976E 00	1.0188E 00	8.4269E-01	6.6912E-01	4.9808E-01	3.2957E-01	1.6354E-01
0.								

MU(2)

1.5270E 01	1.5264E 01	1.5257E 01	1.5250E 01	1.5244E 01	1.5237E 01	1.5230E 01	1.5224E 01	1.5217E 01
1.5210E 01	1.5204E 01	1.5197E 01	1.5190E 01	1.5184E 01	1.5177E 01	1.5170E 01	1.5164E 01	1.5157E 01
1.5150E 01	1.5144E 01	1.5137E 01	1.5131E 01	1.5124E 01	1.5117E 01	1.5111E 01	1.5104E 01	1.5098E 01
1.5091E 01	1.5085E 01	1.5078E 01	1.5072E 01	1.5065E 01	1.5059E 01	1.5052E 01	1.5045E 01	1.5039E 01
1.5032E 01	1.5026E 01	1.5020E 01	1.5013E 01	1.5007E 01	1.5000E 01	1.4994E 01	1.4987E 01	1.4981E 01
1.4974E 01	1.4968E 01	1.4962E 01	1.4955E 01	1.4949E 01	1.4496E 01	1.4054E 01	1.3622E 01	1.3199E 01
1.2785E 01	1.2380E 01	1.1983E 01	1.1594E 01	1.1213E 01	1.0839E 01	1.0695E 01	1.0551E 01	1.0407E 01
1.0262E 01	1.0117E 01	9.9709E 00	9.8245E 00	9.6775E 00	9.5297E 00	9.3811E 00	9.0086E 00	8.6421E 00
8.2812E 00	7.9257E 00	7.5755E 00	7.2302E 00	6.8897E 00	6.5537E 00	6.2221E 00	5.8946E 00	5.5711E 00
5.2514E 00	4.9353E 00	4.6227E 00	4.3135E 00	4.0075E 00	3.7045E 00	3.4045E 00	3.1074E 00	2.8130E 00
2.5211E 00	2.2319E 00	1.9450E 00	1.6606E 00	1.3784E 00	1.0985E 00	8.2073E-01	5.4509E-01	2.7153E-01
0.								

MU(3)

2.5766E 01	2.5761E 01	2.5755E 01	2.5750E 01	2.5745E 01	2.5739E 01	2.5734E 01	2.5729E 01	2.5724E 01
2.5718E 01	2.5713E 01	2.5708E 01	2.5702E 01	2.5697E 01	2.5692E 01	2.5687E 01	2.5681E 01	2.5676E 01
2.5671E 01	2.5666E 01	2.5660E 01	2.5655E 01	2.5650E 01	2.5645E 01	2.5639E 01	2.5634E 01	2.5629E 01
2.5624E 01	2.5619E 01	2.5614E 01	2.5608E 01	2.5603E 01	2.5598E 01	2.5593E 01	2.5588E 01	2.5583E 01
2.5578E 01	2.5573E 01	2.5568E 01	2.5563E 01	2.5558E 01	2.5553E 01	2.5548E 01	2.5543E 01	2.5538E 01
2.5533E 01	2.5528E 01	2.5523E 01	2.5518E 01	2.5513E 01	2.4762E 01	2.4025E 01	2.3299E 01	2.2585E 01
2.1881E 01	2.1187E 01	2.0500E 01	1.9821E 01	1.9147E 01	1.8479E 01	1.8466E 01	1.8459E 01	1.8459E 01
1.8466E 01	1.8480E 01	1.8502E 01	1.8531E 01	1.8567E 01	1.8612E 01	1.8666E 01	1.8082E 01	1.7505E 01
1.6932E 01	1.6362E 01	1.5796E 01	1.5233E 01	1.4670E 01	1.4109E 01	1.3547E 01	1.2984E 01	1.2419E 01
1.1851E 01	1.1280E 01	1.0703E 01	1.0122E 01	9.5335E 00	8.9378E 00	8.3335E 00	7.7197E 00	7.0952E 00
6.4590E 00	5.8099E 00	5.1467E 00	4.4682E 00	3.7731E 00	3.0601E 00	2.3277E 00	1.5746E 00	7.9922E-01
0.								

MU(4)

2.5766E 01	2.5771E 01	2.5777E 01	2.5782E 01	2.5787E 01	2.5793E 01	2.5798E 01	2.5803E 01	2.5808E 01
2.5814E 01	2.5819E 01	2.5824E 01	2.5829E 01	2.5835E 01	2.5840E 01	2.5845E 01	2.5850E 01	2.5856E 01
2.5861E 01	2.5866E 01	2.5871E 01	2.5876E 01	2.5882E 01	2.5887E 01	2.5892E 01	2.5897E 01	2.5902E 01
2.5907E 01	2.5912E 01	2.5917E 01	2.5923E 01	2.5928E 01	2.5933E 01	2.5938E 01	2.5943E 01	2.5948E 01
2.5953E 01	2.5958E 01	2.5963E 01	2.5968E 01	2.5972E 01	2.5977E 01	2.5982E 01	2.5987E 01	2.5992E 01
2.5997E 01	2.6002E 01	2.6006E 01	2.6011E 01	2.6016E 01	2.6696E 01	2.7203E 01	2.7783E 01	2.8203E 01
2.8549E 01	2.8827E 01	2.9043E 01	2.9201E 01	2.9306E 01	2.9362E 01	2.8799E 01	2.8258E 01	2.7739E 01
2.7242E 01	2.6765E 01	2.6306E 01	2.5866E 01	2.5444E 01	2.5038E 01	2.4649E 01	2.4861E 01	2.5022E 01
2.5138E 01	2.5211E 01	2.5244E 01	2.5242E 01	2.5206E 01	2.5140E 01	2.5047E 01	2.4927E 01	2.4785E 01
2.4621E 01	2.4438E 01	2.4238E 01	2.4021E 01	2.3790E 01	2.3546E 01	2.3290E 01	2.3023E 01	2.2747E 01
2.2462E 01	2.2169E 01	2.1870E 01	2.1564E 01	2.1253E 01	2.0937E 01	2.0617E 01	2.0293E 01	1.9966E 01
1.9636E 01								

Fig. A.3 (continued)

MU(5)

1.5270E 01	1.5277E 01	1.5284E 01	1.5290E 01	1.5297E 01	1.5304E 01	1.5311E 01	1.5317E 01	1.5324E 01
1.5331E 01	1.5337E 01	1.5344E 01	1.5351E 01	1.5358E 01	1.5364E 01	1.5371E 01	1.5378E 01	1.5384E 01
1.5391E 01	1.5398E 01	1.5405E 01	1.5411E 01	1.5418E 01	1.5425E 01	1.5432E 01	1.5438E 01	1.5445E 01
1.5452E 01	1.5458E 01	1.5465E 01	1.5472E 01	1.5479E 01	1.5485E 01	1.5492E 01	1.5499E 01	1.5505E 01
1.5512E 01	1.5519E 01	1.5526E 01	1.5532E 01	1.5539E 01	1.5546E 01	1.5552E 01	1.5559E 01	1.5566E 01
1.5572E 01	1.5579E 01	1.5586E 01	1.5592E 01	1.5599E 01	1.6030E 01	1.6435E 01	1.6813E 01	1.7166E 01
1.7496E 01	1.7803E 01	1.8088E 01	1.8352E 01	1.8596E 01	1.8821E 01	1.8821E 01	1.8818E 01	1.8814E 01
1.8807E 01	1.8798E 01	1.8787E 01	1.8774E 01	1.8759E 01	1.8743E 01	1.8725E 01	1.8911E 01	1.9080E 01
1.9234E 01	1.9372E 01	1.9495E 01	1.9605E 01	1.9701E 01	1.9785E 01	1.9856E 01	1.9915E 01	1.9963E 01
2.0000E 01	2.0027E 01	2.0043E 01	2.0050E 01	2.0048E 01	2.0037E 01	2.0017E 01	1.9990E 01	1.9954E 01
1.9911E 01	1.9860E 01	1.9803E 01	1.9739E 01	1.9668E 01	1.9591E 01	1.9509E 01	1.9420E 01	1.9325E 01
1.9226E 01								

MU(6)

1.0600E 01	1.0605E 01	1.0610E 01	1.0616E 01	1.0621E 01	1.0626E 01	1.0632E 01	1.0637E 01	1.0642E 01
1.0648E 01	1.0653E 01	1.0658E 01	1.0664E 01	1.0669E 01	1.0674E 01	1.0680E 01	1.0685E 01	1.0691E 01
1.0696E 01	1.0701E 01	1.0707E 01	1.0712E 01	1.0717E 01	1.0723E 01	1.0728E 01	1.0734E 01	1.0739E 01
1.0744E 01	1.0750E 01	1.0755E 01	1.0761E 01	1.0766E 01	1.0772E 01	1.0777E 01	1.0782E 01	1.0788E 01
1.0793E 01	1.0799E 01	1.0804E 01	1.0810E 01	1.0815E 01	1.0820E 01	1.0826E 01	1.0831E 01	1.0837E 01
1.0842E 01	1.0848E 01	1.0853E 01	1.0858E 01	1.0864E 01	1.1178E 01	1.1478E 01	1.1763E 01	1.2035E 01
1.2293E 01	1.2538E 01	1.2770E 01	1.2991E 01	1.3200E 01	1.3398E 01	1.3457E 01	1.3514E 01	1.3570E 01
1.3623E 01	1.3674E 01	1.3724E 01	1.3772E 01	1.3818E 01	1.3862E 01	1.3905E 01	1.4073E 01	1.4231E 01
1.4379E 01	1.4518E 01	1.4649E 01	1.4771E 01	1.4885E 01	1.4991E 01	1.5089E 01	1.5180E 01	1.5264E 01
1.5341E 01	1.5410E 01	1.5474E 01	1.5531E 01	1.5582E 01	1.5627E 01	1.5666E 01	1.5700E 01	1.5728E 01
1.5751E 01	1.5769E 01	1.5782E 01	1.5789E 01	1.5793E 01	1.5791E 01	1.5785E 01	1.5775E 01	1.5760E 01
1.5741E 01								

Fig. A.3 (continued)

```
WAPS CODE SAMPLE PROBLEM FOR REPORT

FAST GROUP SIGR(COMP,N),N#1, 21

COMP  1
 2.1073E-05  1.9957E-05  1.8911E-05  1.7930E-05  1.7012E-05  1.6151E-05  1.9399E-05  1.8820E-05  1.8225E-05
 1.7620E-05  1.7012E-05  1.8673E-05  1.8474E-05  1.8225E-05  1.7930E-05  1.8673E-05  1.8820E-05  1.8911E-05
 1.9399E-05  1.9957E-05  2.1073E-05

COMP  2
 5.1667E-04  5.1667E-04  5.1667E-04  5.1667E-04  5.1667E-04  5.1667E-04  5.1667E-04  5.1667E-04  5.1667E-04
 5.1667E-04  5.1667E-04  5.1667E-04  5.1667E-04  5.1667E-04  5.1667E-04  5.1667E-04  5.1667E-04  5.1667E-04
 5.1667E-04  5.1667E-04  5.1667E-04

COMP  3
 7.9583E-05  7.7083E-05  7.4583E-05  7.2083E-05  6.9583E-05  6.7083E-05  7.5583E-05  7.4083E-05  7.2583E-05
 7.1083E-05  6.9583E-05  7.3583E-05  7.3083E-05  7.2583E-05  7.2083E-05  7.3583E-05  7.4083E-05  7.4583E-05
 7.5583E-05  7.7083E-05  7.9583E-05
```

Fig. A.3 (continued)

```
SWAPS CODE SAMPLE PROBLEM FOR REPORT

 SLOW GROUP SIGR(COMP,N),N#1, 21

 COMP  1
  2.2865E-05  2.1698E-05  2.0603E-05  1.9577E-05  1.8613E-05  1.7710E-05  2.1114E-05  2.0507E-05  1.9884E-05
  1.9250E-05  1.8613E-05  2.0352E-05  2.0144E-05  1.9884E-05  1.9577E-05  2.0352E-05  2.0507E-05  2.0603E-05
  2.1114E-05  2.1698E-05  2.2865E-05

 COMP  2
  5.3333E-04  5.3333E-04  5.3333E-04  5.3333E-04  5.3333E-04  5.3333E-04  5.3333E-04  5.3333E-04  5.3333E-04
  5.3333E-04  5.3333E-04  5.3333E-04  5.3333E-04  5.3333E-04  5.3333E-04  5.3333E-04  5.3333E-04  5.3333E-04
  5.3333E-04  5.3333E-04  5.3333E-04

 COMP  3
  1.1523E-04  1.1181E-04  1.0838E-04  1.0495E-04  1.0153E-04  9.8102E-05  1.0975E-04  1.0769E-04  1.0564E-04
  1.0358E-04  1.0153E-04  1.0701E-04  1.0632E-04  1.0564E-04  1.0495E-04  1.0701E-04  1.0769E-04  1.0838E-04
  1.0975E-04  1.1181E-04  1.1523E-04
```

Fig. A.3 (continued)

```
WAPS CODE SAMPLE PROBLEM FOR REPORT

FAST GROUP SIGS(COMP,N),N#1, 21

COMP  1
 1.9849E-05  1.9235E-05  1.8649E-05  1.8091E-05  1.7558E-05  1.7051E-05  1.8912E-05  1.8581E-05  1.8244E-05
 1.7902E-05  1.7558E-05  1.8491E-05  1.8378E-05  1.8244E-05  1.8091E-05  1.8491E-05  1.8581E-05  1.8649E-05
 1.8912E-05  1.9235E-05  1.9849E-05

COMP  2
 5.3333E-04  5.3333E-04  5.3333E-04  5.3333E-04  5.3333E-04  5.3333E-04  5.3333E-04  5.3333E-04  5.3333E-04
 5.3333E-04  5.3333E-04  5.3333E-04  5.3333E-04  5.3333E-04  5.3333E-04  5.3333E-04  5.3333E-04  5.3333E-04
 5.3333E-04  5.3333E-04  5.3333E-04

COMP  3
 9.7407E-05  9.4444E-05  9.1481E-05  8.8519E-05  8.5556E-05  8.2593E-05  9.2667E-05  9.0889E-05  8.9111E-05
 8.7333E-05  8.5556E-05  9.0296E-05  8.9704E-05  8.9111E-05  8.8519E-05  9.0296E-05  9.0889E-05  9.1481E-05
 9.2667E-05  9.4444E-05  9.7407E-05
```

Fig. A.3 (continued)

```
SWAPS CODE SAMPLE PROBLEM FOR REPORT

 SLOW GROUP SIGS(COMP,N),N#1, 21

 COMP  1
  2.1777E-05  2.1056E-05  2.0371E-05  1.9719E-05  1.9099E-05  1.8510E-05  2.0681E-05  2.0295E-05  1.9901E-05
  1.9501E-05  1.9099E-05  2.0190E-05  2.0058E-05  1.9901E-05  1.9719E-05  2.0190E-05  2.0295E-05  2.0371E-05
  2.0681E-05  2.1056E-05  2.1777E-05

 COMP  2
  5.5000E-04  5.5000E-04  5.5000E-04  5.5000E-04  5.5000E-04  5.5000E-04  5.5000E-04  5.5000E-04  5.5000E-04
  5.5000E-04  5.5000E-04  5.5000E-04  5.5000E-04  5.5000E-04  5.5000E-04  5.5000E-04  5.5000E-04  5.5000E-04
  5.5000E-04  5.5000E-04  5.5000E-04

 COMP  3
  1.4000E-03  1.4000E-03  1.4000E-03  1.4000E-03  1.4000E-03  1.4000E-03  1.4000E-03  1.4000E-03  1.4000E-03
  1.4000E-03  1.4000E-03  1.4000E-03  1.4000E-03  1.4000E-03  1.4000E-03  1.4000E-03  1.4000E-03  1.4000E-03
  1.4000E-03  1.4000E-03  1.4000E-03
```

Fig. A.3 (continued)

References

[1] M. L. Tobias and T. B. Fowler, "EQUIPOISE – An IBM-704 Code for the Solution of Two-Group, Two-Dimensional, Neutron Diffusion Equations in Cylindrical Geometry," ORNL-2967 (Oct. 17, 1960).

[2] B. G. Carlson and G.I. Bell, "Solution of the Transport Equation by the S_n Method," P/2386, Second International Conference on the Peaceful Uses of Atomic Energy, Geneva (1958).

[3] L. A. Hageman, "On a Numerical Approximation to the Solution of the One-Dimensional, One-Velocity Transport Equation with Isotropic Scattering," WAPD-T-706 (Jan., 1959).

[4] A. M. Weinberg and E. P. Wigner, The Physical Theory of Neutron Chain Reactors, University of Chicago Press, 1958.

[5] K. M. Case, F. de Hoffmann, and G. Placzek, Introduction to the Theory of Neutron Diffusion, Vol. 1, p. 148, Los Alamos Scientific Laboratory (June 1953).

[6] L. Dresner, "On the Validity of the Second Fundamental Theorem in a Medium with Anisotropic Scattering," Nuclear Sci. and Eng. 7, 419-424 (1960).

Internal Distribution

1. L. G. Alexander
2. V. E. Anderson (K-25)
3. S. E. Beall
4. M. Bender
5. L. L. Bennett
6. A. L. Boch
7. W. L. Breazeale
8. R. B. Briggs
9. R. S. Carlsmith
10. W. L. Carter
11. R. D. Cheverton
12. H. C. Claiborne
13. A. L. Colomb
14. R. R. Coveyou
15. J. G. Delene
16. A. C. Downing
17. J. R. Engel
18-22. T. B. Fowler
23. A. P. Fraas
24. E. H. Gift
25. D. R. Gilfillan
26. E. E. Gross
27. P. N. Haubenreich
28. A. S. Householder
29. W. H. Jordan
30. P. R. Kasten
31. T. W. Kerlin
32. W. E. Kinney
33. J. A. Lane
34. R. N. Lyon
35. H. G. MacPherson
36. W. D. Manly
37. B. Maskewitz (K-25)
38. A. J. Miller
39. E. A. Nephew
40. C. W. Nestor, Jr.
41. C. E. Newlon (K-25)
42. A. M. Perry
43. P. H. Pitkanen
44. C. A. Preskitt
45. B. E. Prince
46. M. W. Rosenthal
47. T. H. Row
48. J. E. Rowe (K-25)
49. H. W. Savage
50. A. W. Savolainen
51. E. G. Silver
52. M. J. Skinner
53. O. L. Smith
54. I. Spiewak
55. J. G. Sullivan
56. J. A. Swartout
57-61. M. L. Tobias
62. D. B. Trauger
63. M. E. Tsagaris
64. R. Van Winkle
65. D. R. Vondy
66-70. Laboratory Records Department
71. Laboratory Records, LRD-RC
72-74. Y-12 Document Reference Section, DRS
75-76. Central Research Library, CRL
77-78. Reactor Division Library
79. SHARE Library (K-25)

External Distribution

80. C. P. Bhalla, Westinghouse Electric Corporation, Atomic Power Department, Pittsburgh, Pa.
81. L. R. Blue, Atomic International, Canoga Park, Calif.
82. W. Cartwell, System Analysis and Computation, IBM, Owego, New York
83. R. L. Crowther, Atomic Power Department, General Electric Co., San Jose, Calif.
84. E. M. Gelbard, Westinghouse Electric Corporation, Bettis Plant, Pittsburgh, Pa.
85. D. H. Groelsema, AEC, Washington
86. Haig Iskenderian, Argonne National Laboratory
87. D. Jacobson, Argonne National Laboratory
88. Seymour Jaye, General Atomic, San Diego, Calif.
89. W. B. Lee, Lockheed Nuclear Products, Atlanta, Georgia

90. D. J. Mallon, Allison Division, General Motors Corp., Indianapolis, Indiana
91. T. F. McKiernan, Pratt & Whitney Aircraft, Hartford, Conn.
92. B. H. Mount, Westinghouse Electric Corp., Bettis Plant, Pittsburgh, Pa.
93. W. Sangren, General Atomic, San Diego, Calif.
94. D. M. Shapiro, Internuclear Company, Clayton, Missouri
95. D. W. Thomas, Aerojet-General Nucleonics, San Ramon, Calif.
96-110. Division of Technical Information Extension, DTIE
111. Research and Development Division, ORO
112-113. Reactor Division, ORO