OAK RIDGE NATIONAL LABORATORY LIBRARIES
3 4456 0548492 7

CENTRAL RESEARCH LIBRARY
DOCUMENT COLLECTION

OAK RIDGE NATIONAL LABORATORY
operated by
UNION CARBIDE CORPORATION
for the
U.S. ATOMIC ENERGY COMMISSION

ORNL-TM-186
COPY NO. - 33
DATE - March 29, 1962

# CORROSION OF THE VOLATILITY PILOT PLANT INOR-8 HYDROFLUORINATOR AND L NICKEL FLUORINATOR AFTER 21 NONRADIOACTIVE DISSOLUTION RUNS

E. C. Moncrief

## ABSTRACT

Excessive corrosion of an instrument line in the Volatility Pilot Plant hydrofluorinator was observed after 21 processing runs with prototype and unirradiated zirconium-uranium fuel. Maximum and average corrosion rates for the pipe were 0.10 and 0.01 mil per HF exposure hour, rexpectively. Examination of the hydrofluorinator and fluorinator vessel walls by ultrasonic techniques did not show abnormal corrosion. Average corrosion rates for these vessels after 503 hr of HF and 38.7 hr of $F_2$ exposure were 0.01-0.03 and 0.12-0.26 mil per gas exposure hour, respectively. These rates, based on uncleaned vessel surfaces, are lower than previous measured rates.

CENTRAL RESEARCH LIBRARY
DOCUMENT COLLECTION
LIBRARY LOAN COPY
DO NOT TRANSFER TO ANOTHER PERSON
If you wish someone else to see this document, send in name with document and the library will arrange a loan.

NOTICE

This document contains information of a preliminary nature and was prepared primarily for internal use at the Oak Ridge National Laboratory. It is subject to revision or correction and therefore does not represent a final report. The information is not to be abstracted, reprinted or otherwise given public dissemination without the approval of the ORNL patent branch, Legal and Information Control Department.

LEGAL NOTICE

This report was prepared as an account of Government sponsored work. Neither the United States, nor the Commission, nor any person acting on behalf of the Commission:

A. Makes any warranty or representation, expressed or implied, with respect to the accuracy, completeness, or usefulness of the information contained in this report, or that the use of any information, apparatus, method, or process disclosed in this report may not infringe privately owned rights; or

B. Assumes any liabilities with respect to the use of, or for damages resulting from the use of any information, apparatus, method, or process disclosed in this report.

As used in the above, "person acting on behalf of the Commission" includes any employee or contractor of the Commission, or employee of such contractor, to the extent that such employee or contractor of the Commission, or employee of such contractor prepares, disseminates, or provides access to, any information pursuant to his employment or contract with the Commission, or his employment with such contractor.

## 1.0 INTRODUCTION

This report presents the results of wall thickness measurements made on the hydrofluorinator, fluorinator, and associated instrument piping in 21 processing runs with zircaloy-2 and alloy fuel elements made in the Volatility Pilot Plant. Ten runs, T-1 through T-10, were only dissolution runs, and 11, TU-1 through TU-11, were complete flowsheet demonstrations runs for evaluation of all process steps including fluorination and product recovery.

After run TU-11, process instrument piping was removed from the lower 5-in.-I.D. section of the hydrofluorinator. Visual examination of the piping revealed one area of apparent excessive corrosion at the lower end of instrument line I-1000-1. Although two previous wall thickness measurements[1,2] had failed to show abnormal vessel wall corrosion, the vessel was re-examined with the "Vidigage". At the same time, a cursory examination was made of the lower section of the fluorinator (Table 1).

## 2.0 PLANT EXPOSURE CONDITIONS

The runs were made by the flowsheet shown in Fig. 1. Tables 2 and 3 summarize the Pilot Plant exposure conditions for the hydrofluorinator and fluorinator, respectively. Previously corrosion surveys had been made after runs T-7 and TU-7.

## 3.0 HYDROFLUORINATOR CORROSION

The hydrofluorinator wall thicknesses were determined with the Vidigage, an ultrasonic measuring device accurate to ± 1% of the thickness measured (Fig. 2). Neither ammonium oxalate nor nitric acid was used to remove residual salt or metallic films, respectively, from the vessel walls. Since the Vidigage detects only bulk metal loss, measurement of pitting and intergranular attack must await metallographic examination.

---

1. E. C. Moncrief and A. P. Litman, "Corrosion of the Volatility Pilot Plant INOR-8 Dissolver After Seven Cold Dissolution Runs," ORNL-CF-60-11-80 (Nov. 1960).
2. A. P. Litman, "Corrosion of Volatility Pilot Plant Mark I INOR-8 Hydrofluorinator and Mark III Nickel Fluorinator After Fourteen Dissolution Runs," ORNL-3253 (Feb. 1962).

OAK RIDGE NATIONAL LABORATORY LIBRARIES
3 4456 0548492 7

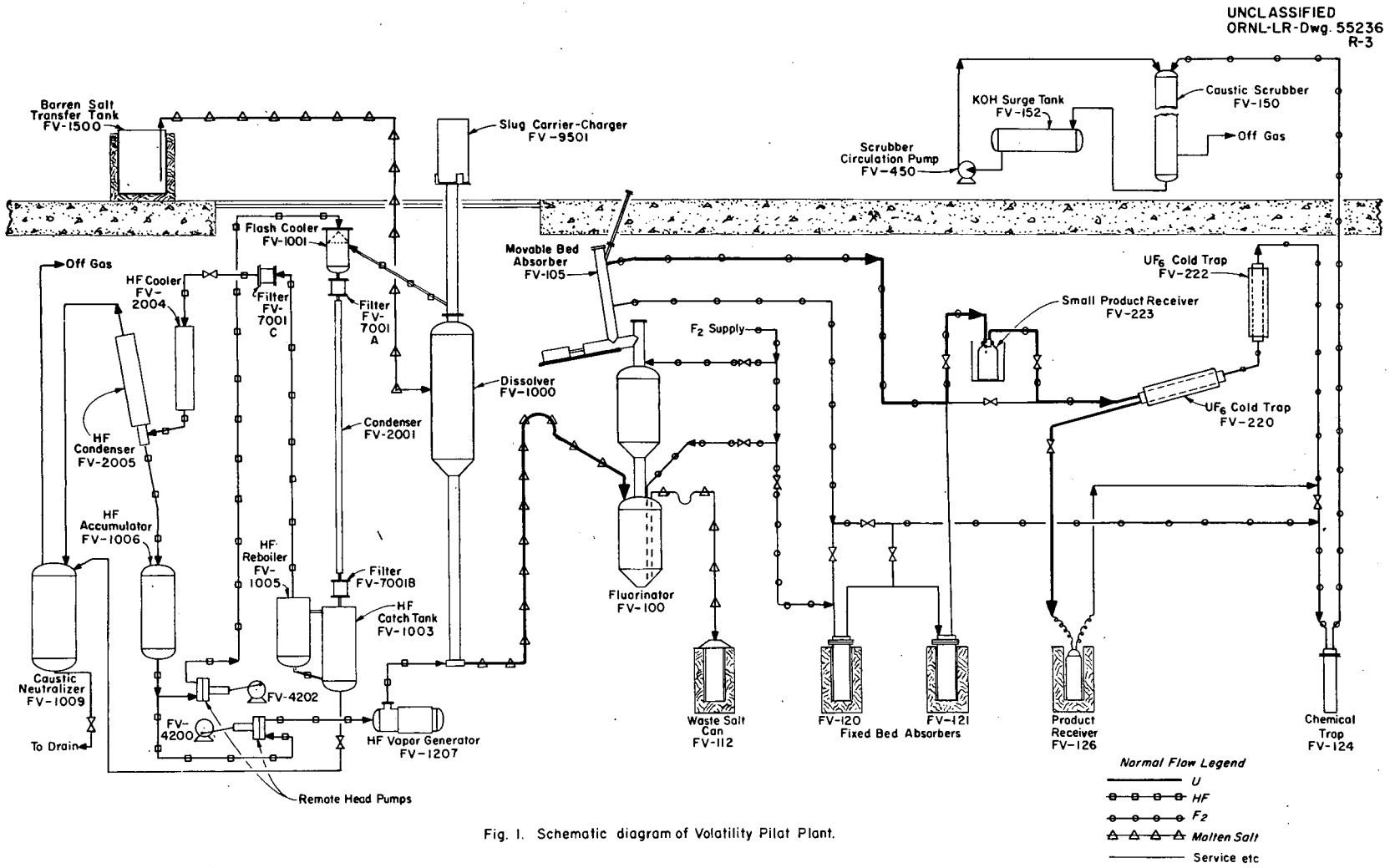


Fig. 1. Schematic diagram of Volatility Pilot Plant.

Fig. 1. Volatility Pilot Plant Flowsheet.

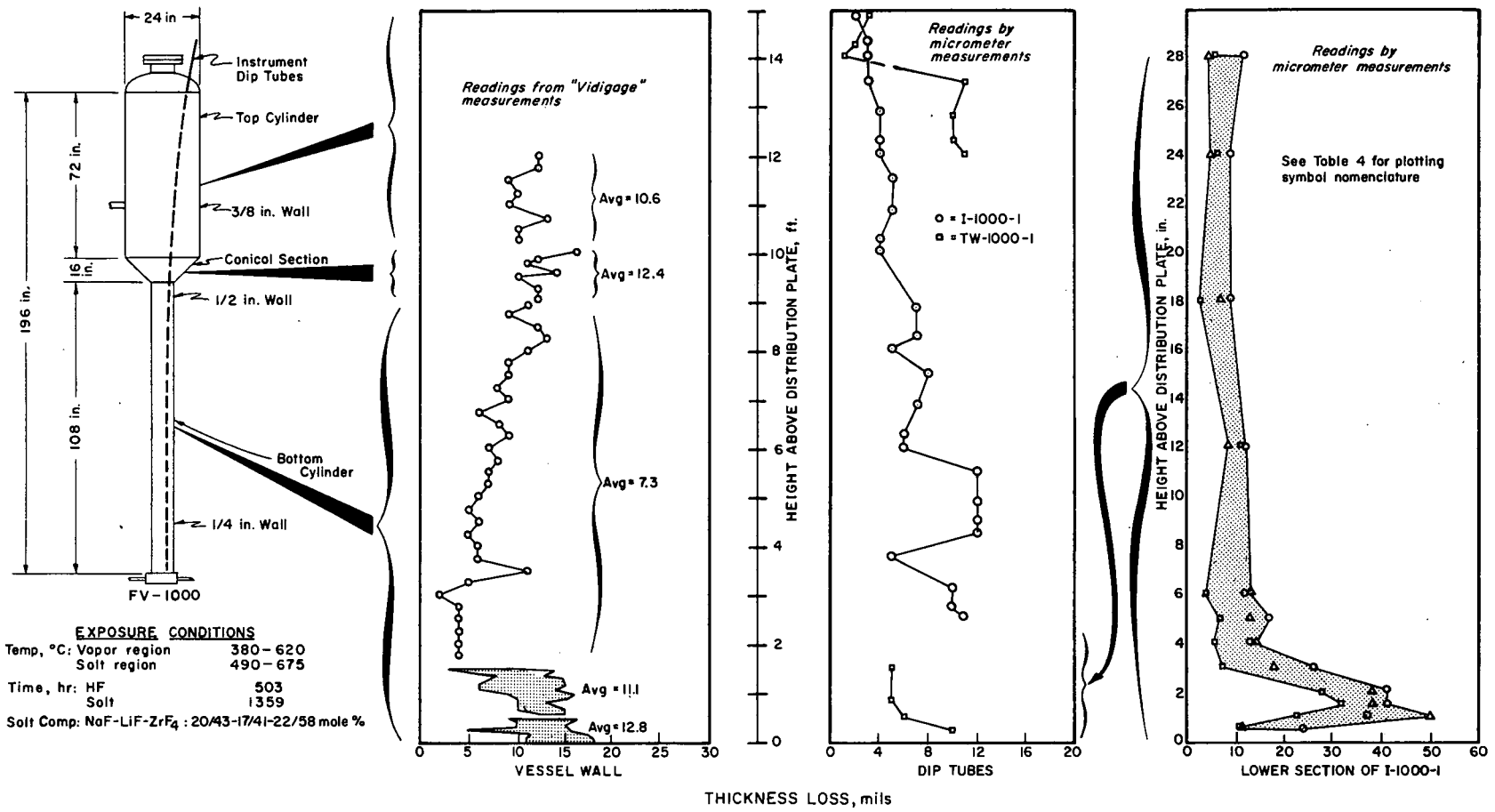


Fig. 2. Wall Thickness Loss of Hydrofluorinator and Instrument Dip Tubes After Twenty-One Dissolution Runs.

Table 1. Summary of Corrosion Rates of Volatility Pilot Plant Process Vessels and Associated Instrument Piping

| Point of Examination | Corrosion Rate mils/hr[a] Average | Corrosion Rate mils/hr[a] Maximum | Corrosion Rate mils/mo[b] Average | Corrosion Rate mils/mo[b] Maximum |
|---|---|---|---|---|
| Hydrofluorinator wall | | | | |
| First 6 in. of bottom cylinder | 0.025 | 0.036 | 6.8 | 9.6 |
| Area 6-18 in. above bottom | 0.022 | 0.032 | 5.9 | 8.5 |
| Remainder of bottom cylinder | 0.015 | 0.026 | 4.0 | 6.9 |
| Conical section | 0.025 | 0.032 | 6.6 | 8.5 |
| First 21 in. of top cylinder | 0.021 | 0.026 | 5.6 | 6.9 |
| Hydrofluorinator dip-tubes | | | | |
| First 6 in. of line I-1000-1[c] | 0.043 | 0.100 | 11.5 | 26.5 |
| Remainder of line I-1000-1 | 0.013 | 0.024 | 3.4 | 6.4 |
| Line TW-1000-1[d] | 0.012 | 0.022 | 3.2 | 5.8 |
| Fluorinator wall | | | | |
| Bottom cylinder | 0.121 | 0.232 | 2.5 | 4.9 |
| Bottom cone | 0.259 | 0.362 | 5.4 | 7.5 |

[a]Based on 503.4 hr HF exposure time for hydrofluorinator wall and dip-tubes and 38.7 hr fluorine exposure for fluorinator wall.

[b]Based on 1359 hr molten salt residence time for hydrofluorinator wall and dip-tubes and 1337.3 hr for fluorinator wall.

[c]Liquid level probe.

[d]Thermocouple well.

The lower 6 in. of the bottom cylinder was surveyed in 1-in. vertical and 30-degree circumferential increments. Corrosion in this area was the highest of any zone surveyed, with a maximum wall thickness loss of 17 mils compared with 7 mils after run TU-7.

The next 12 in. of the bottom cylinder was measured in 1-in. vertical and 90-degree circumferential increments. Corrosion in this area was 1-2 mils lower than in the first area surveyed.

The remainder of the bottom cylinder, the conical section, and 21 in. of the top cylinder were measured in 3-in. increments along the vertical wall contour in the "A" quadrant of the vessel. Maximum corrosion was in the conical section, averaging 12.4 mils, or ~2 mils more than after run TU-7.

Micrometer measurements on the hydrofluorinator instrument piping

Table 2. VPP INOR-8 Hydrofluorinator Process History

| Run Designation | No. of Fuel Elements Dissolved | $NaF-LiF-ZrF_4$ Composition, mole % | | Vessel Wall Temperature During Dissolution, °C | | | | Molten Salt Residence Time, hr | HF Flow Rate, g/min | HF Exposure Time, hr |
|---|---|---|---|---|---|---|---|---|---|---|
| | | | | Vapor Region | | Salt Region | | | | |
| | | Initial | Final | Max | Min | Max | Min | | | |
| Salt transfer studies | | 27-27-46 | 27-27-46 | 435 | 425 | 565 | 535 | 44.5 | 0 | 0 |
| T-1[a] | 1 | 43-22-35[b] | 31-17-52 | 410 | N.A. | 560 | 520 | 87 | 104 | 38 |
| T-2 | 1 | 38-30-32[b] | 30-27-43 | 380 | N.A. | 530 | 525 | 95 | 40 | 41.5 |
| T-3 | 1 | 39-39-22[b] | 31-26-43 | 575 | N.A. | 625 | 550 | 57 | 90 | 25 |
| T-4 | 1 | 38-37-25[b] | 30-27-43 | 590 | 500 | 630 | 495 | 51.5 | 90 | 22.5 |
| T-5 | 1 | 38-37-25[b] | 30-27-43 | 570 | 460 | 625 | 530 | 62 | 90 | 27 |
| T-6 | 1 | 38-37-25[b] | 31-30-39 | 550 | 390 | 650 | 500 | 59.5 | 118, 150 | 26 |
| T-7 | 2 | 37-37-26[b] | 27-27-46 | 590 | 440 | 655 | 525 | 53 | 135 | 23 |
| TU-1[c] | 2 | 40-35-25[d] (+0.3 wt % U) | 34-26-40 | 560 | 400 | 670 | 490 | 44 | 92 | 23 |
| TU-2 | 2 | 37-38-25[d] (+0.2 wt % U) | 30-27-43 | 620 | 450 | 650 | 500 | 35 | 125 | 24 |
| TU-3 | 2 | 33-41-26[d] (+0.3 wt % U) | 30-31-39 | 570 | 390 | 655 | 495 | 32.5 | 150 | 19.5 |
| TU-4 | 2 | 42-34-24[d] (+0.4 wt % U) | 37-29-34 | 575 | 440 | 650 | 555 | 36 | 146 | 11 |
| TU-5 | 1 | 42-35-23[d] (+0.3 wt % U) | 29-29-42 | 525 | 400 | 650 | 500 | 36 | 150 | 22 |
| TU-6 | 1 | 38-37-25[d] (+0.3 wt % U) | 34-28-38 | 525 | 385 | 650 | 500 | 35 | 121 | 19 |
| TU-7 | 1 | 39-38-23[d] (+0.2 wt % U) | 30-30-40 | 515 | 405 | 650 | 500 | 37 | 150 | 17 |
| T-8 | 2 | 28-30-42[d] | 20-22-58[e] | 520 | 395 | 640 | 500 | 87 | 150 | 23.2 |
| T-9 | 2[f] | 32-33-35[d] | 27-28-45 | 460 | 360 | 560 | 510 | 89 | 190 | 18.9 |
| T-10 | 2 | 38-37-25[d] | 27-27-46 | 520 | 400 | 640 | 490 | 111 | 162 | 30.0 |
| TU-8 | 1 | 35-41-24[d] (+0.3 wt % U) | 28-32-40 | 525 | 400 | 652 | 495 | 49 | 150, 110 | 18.0 |
| TU-9 | 1 | 35-42-23[d] (+0.2 wt % U) | 28-32-40 | 555 | 395 | 665 | 500 | 70 | 180 | 24.0 |
| TU-10 | 1 | 36-40-24[d] (+0.2 wt % U) | 29-31-40 | 520 | 395 | 650 | 495 | 129 | 150 | 22.8 |
| TU-11 | 1 | 35-42-23[d] (+0.2 wt % U) | 28-32-40 | 555 | 395 | 665 | 500 | 59 | 180 | 28.0 |
| | | | | | | Total | | 1359.0 | | 503.4 |

[a]In the T-series simulated fuel elements of zircaloy-2 plate were used.

[b]Barren salt charge 60 to 115 kg.

[c]In the TU-series alloy fuel with zircaloy-2 cladding was used.

[d]Barren salt charge 95 to 112 kg.

[e]Abnormal final $ZrF_4$ content due to operational error (see CF-62-1-36).

[f]One new element plus T-8 carcass.

Table 3. VPP L Nickel Fluorinator Process History

| Run Designation | $NaF-LiF-ZrF_4$ Composition, mole % | Vessel Wall Temperatures, °C: Without $F_2$[a] Vapor Region | Without $F_2$[a] Salt Region | With $F_2$ Vapor Region | With $F_2$ Salt Region | Molten Salt Residence Time, hr | $F_2$ Flow Rate, liters/min at STP | $F_2$ Exposure Time, hr |
|---|---|---|---|---|---|---|---|---|
| $F_2$ conditioning | None | | | 630-310 | 670-560 | 0 | 5 psig (static) | 5.3 |
| Salt transfer studies | 27-27-46 | ~375 | 565-550 | | | 49 | 0 | None |
| T-1 | 31-17-52 | 175-150 | 555-540 | | | 38 | 0 | None |
| T-2 | 30-27-43 | 180-150 | 570-545 | | | 78 | 0 | None |
| T-3 | 31-26-43 | 170-160 | 550-525 | | | 94 | 0 | None |
| T-4 | 30-27-43 | 340-325 | 515-485 | | | 15 | 0 | None |
| T-5 | 30-27-43 | 375-360 | 580-550 | | | 27 | 0 | None |
| T-6 | 31-30-39 | 480-475 | 575-560 | | | 15 | 0 | None |
| T-7 | 27-27-46 | 360-340 | 605-580 | | | 18 | 0 | None |
| $F_2$ sparge tests | None | 525-500 | 575-550 | 520-495 | 570-535 | 45 | 8 | 12.0 |
| TU-1 | 34-26-40 (+0.3 wt % U) | 405-375 | 530-510 | 360-350 | 505-500 | 52 | 12 | 2.5 |
| TU-2 | 30-27-43 (+0.2 wt % U) | 475-450 | 515-490 | 460-440 | 505-500 | 40 | 6 | 2.5 |
| TU-3 | 30-31-39 (+0.3 wt % U) | 325-300 | 575-550 | 330-320 | 510-500 | 38 | 9 | 1.75 |
| TU-4 | 37-29-34 (+0.4 wt % U) | 325-300 | 535-510 | 330-315 | 515-500 | 50 | 4, 12 | 1.25, 1.0 |
| TU-5 | 29-29-42 (+0.3 wt % U) | 390-350 | 570-525 | 360-325 | 510-500 | 36 | 4, 16 | 1.0, 0.5 |
| TU-6 | 34-28-38 (+0.3 wt % U) | 375-350 | 580-560 | 360-340 | 505-500 | 34 | 6, 16 | 1.0, 0.4 |
| TU-7 | 30-30-40 (+0.2 wt % U) | 360-340 | 575-550 | 360-340 | 510-500 | 65 | 6, 16 | 1.0, 0.7 |
| T-8 | 20-22-58 | 590-340 | 750[b]-525 | | | 141 | 0 | None |
| T-9 | 27-28-45 | 565-335 | 715[c]-515 | | | 202 | 0 | None |
| T-10 | 27-27-46 | 340-330 | 525-500 | | | 111 | 0 | None |
| TU-8 | 28-32-40 (+0.3 wt % U) | 365-330 | 530-500 | 360-330 | 500-495 | 54 | 6, 16 | 1.7, 0.3 |
| TU-9 | 28-32-40 (+0.2 wt % U) | 390-355 | 535-515 | 365-340 | 525-515 | 33 | 6 | 1.7 |
| TU-10 | 29-31-40 (+0.2 wt % U) | 365-340 | 520-505 | 360-340 | 505-500 | 60 | 6, 18 | 1.7, 0.4 |
| TU-11 | 28-32-40 (+0.2 wt % U) | 365-320 | 515-500 | 350-325 | 510-495 | 42.3 | 6, 14 | 1.7, 0.3 |
| | | | | | Total | 1337.3 | | 38.7 |

[a]In a few instances, excursions to 680°C maximum in salt region and 650°C maximum in vapor region were noted.

[b]High temperature reached during removal of high $ZrF_4$ content salt to waste.

[c]High temperature resulted from melting of salt plug in transfer line MS-1004-1 at fluorinator (see CF-62-1-36).

are also plotted in Fig. 2. Since base-line data on the piping were not obtained, all losses are calculated based on 3/8-in. pipe of 91 mils wall thickness. Excessive corrosion occurred 1-2 in. above the bottom of instrument line I-1000-1 (Fig. 3). Metallographic studies on both dip-tubes are scheduled at BMI. Table 4 summarizes the micrometer measurements for the lower end of instrument line I-1000-1.

## 4.0 FLUORINATOR CORROSION

A cursory examination of the wall thickness loss in the fluorinator after run TU-11 showed a maximum thickness loss for the limited area surveyed of 14 mils in the bottom cone (Fig. 4). The 10 mil average loss for this zone was nearly double the average loss reported after run TU-7 (6 mils).

The 4.7 mil average for the bottom cylinder was less than the average loss after run TU-7 (6 mils). However, since only a limited survey was made after run TU-11, additional readings are needed for a valid comparison. Nevertheless, the fluorinator measurements indicate that excessive corrosion did not occur during the last four fluorinations.

Table 4. Wall Thickness Loss of Bottom Section of Hydrofluorinator Instrument Line, I-100-1

| Distance up from bottom of pipe, in. | Approximate Wall Thickness Loss, mils[a] Fig. 2 plotting symbols | | |
|---|---|---|---|
| | o | Δ | □ |
| 0.5 | 24 | 11 | 11 |
| 1.0 | 37 | 50 | 23 |
| 1.5 | 41 | 38 | 32 |
| 2.0 | 41 | 38 | 28 |
| 3.0 | 26 | 18 | 8 |
| 4.0 | 13 | 14 | 6 |
| 5.0 | 17 | 13 | 7 |
| 6.0 | 12 | 13 | 4 |
| 12.0 | 12 | 9 | 12 |
| 18.0 | 9 | 7 | 3 |
| 24.0 | 9 | 5 | 6 |
| 28.0 | 12 | 5 | 5 |

[a]Based on 3/8-in. pipe of 0.675 in. O.D. and 0.091 in. wall thickness. Measurements made along pipe diameter and equidistant around circumference. Although pipe corrosion was not uniform, over-all pipe diameter loss was assumed to occur equally on both walls.

UNCLASSIFIED
ORNL-LR-Dwg. 67348

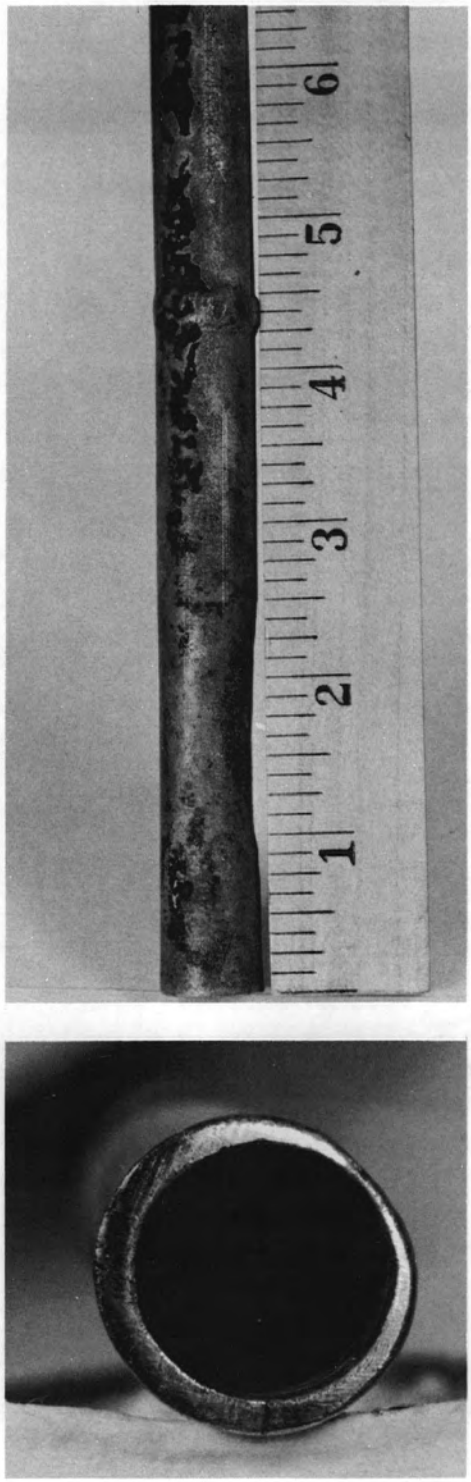


Fig. 3. View of Bottom Section of Instrument Line I-1000-1 Showing Apparent Corrosion.

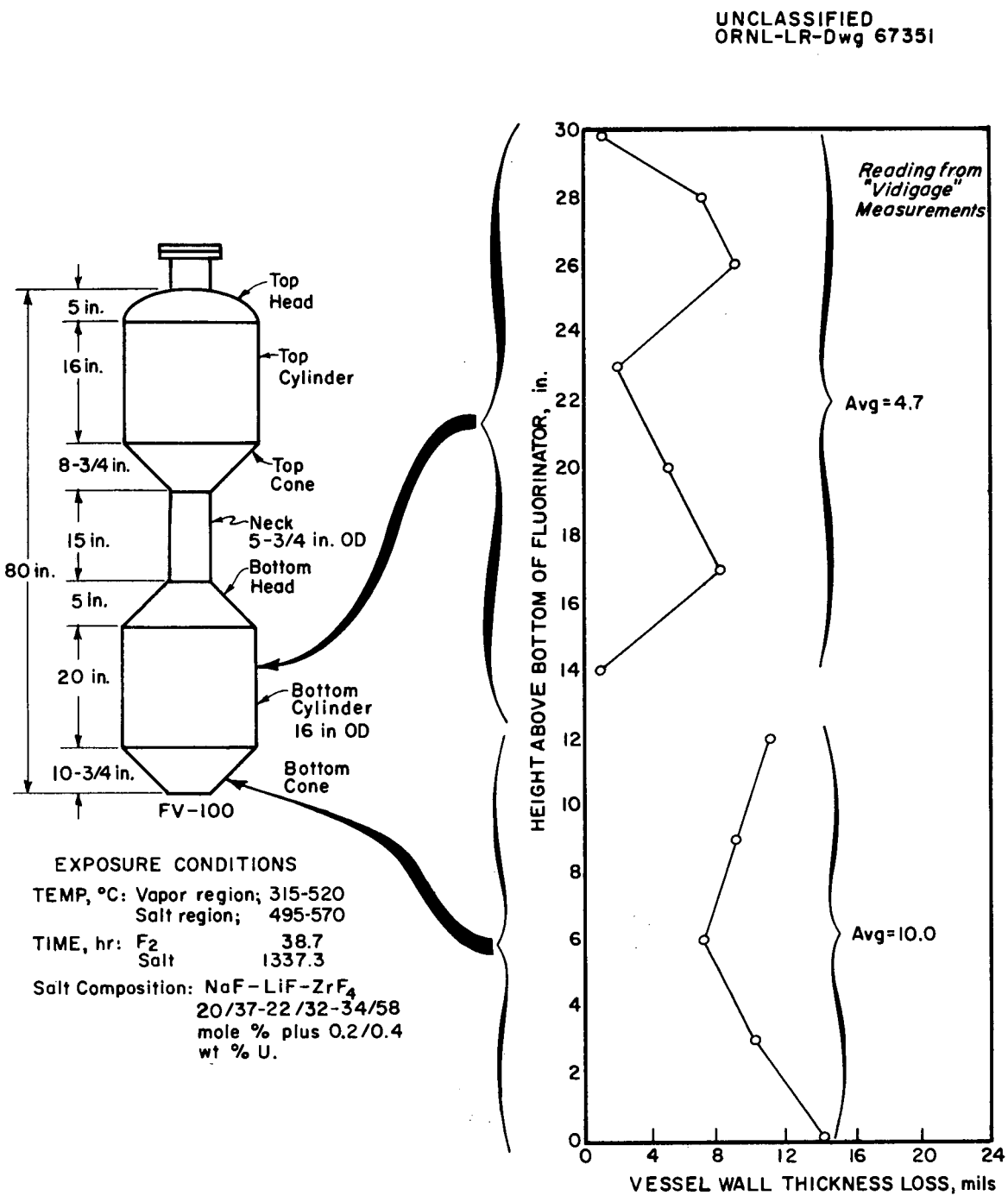


Fig. 4. Wall Thickness Loss of Fluorinator Bottom Sections After Eleven Fluorinations.

DISTRIBUTION

1. F. L. Culler, Jr.
2. M. R. Bennett
3. R. E. Blanco
4. J. C. Bresee
5. K. B. Brown
6. W. H. Carr
7. G. I. Cathers
8. D. E. Ferguson
9. H. E. Goeller
10. H. B. Graham
11. C. E. Guthrie
12. R. W. Horton
13. R. L. Jolley
14. W. H. Lewis
15. R. B. Lindauer
16. S. Mann
17. J. L. Matherne
18. L. E. McNeese
19. F. W. Miles
20. R. P. Milford
21. P. D. Miller, BMI
22. E. C. Moncrief
23-25. E. J. Murphy
26. R. G. Nicol
27. W. W. Pitt
28. J. B. Ruch
29. H. F. Soard
30. J. W. Ullmann
31. M. E. Whatley
32. E. L. Youngblood
33-34. Central Research Library
35. Document Reference Section
36-38. Laboratory Records
39. Laboratory Records - RC
40-54. Division of Technicial Information Extension
55. Research and Development Division