OAK RIDGE NATIONAL LABORATORY

operated by

UNION CARBIDE CORPORATION

for the

U.S. ATOMIC ENERGY COMMISSION

ORNL-TM-134

90

EGCR EXPERIMENTAL LOOPS

PRELIMINARY DESIGN REPORT

F. H. Neill

C. Michelson

NOTICE

This document contains information of a preliminary nature and was prepared primarily for internal use at the Oak Ridge National Laboratory. It is subject to revision or correction and therefore does not represent a final report. The information is not to be abstracted, reprinted or otherwise given public dissemination without the approval of the ORNL patent branch, Legal and Information Control Department.

LEGAL NOTICE

This report was prepared as an account of Government sponsored work. Neither the United States, nor the Commission, nor any person acting on behalf of the Commission:

A. Makes any warranty or representation, expressed or implied, with respect to the accuracy, completeness, or usefulness of the information contained in this report, or that the use of any information, apparatus, method, or process disclosed in this report may not infringe privately owned rights; or

B. Assumes any liabilities with respect to the use of, or for damages resulting from the use of any information, apparatus, method, or process disclosed in this report.

As used in the above, "person acting on behalf of the Commission" includes any employee or contractor of the Commission, or employee of such contractor, to the extent that such employee or contractor of the Commission, or employee of such contractor prepares, disseminates, or provides access to, any information pursuant to his employment or contract with the Commission, or his employment with such contractor.

ORNL-TM-134

Contract No. W-7405-eng-26

Reactor Division

EGCR EXPERIMENTAL LOOPS

PRELIMINARY DESIGN REPORT

F. H. Neill C. Michelson

DATE ISSUED

MAR 27 1962

OAK RIDGE NATIONAL LABORATORY
Oak Ridge, Tennessee
operated by
UNION CARBIDE CORPORATION
for the
U. S. ATOMIC ENERGY COMMISSION

CONTENTS

1. INTRODUCTION 1
1.1 The EGCR 1
1.2 Provisions for Experimental Facilities in the EGCR 5
1.3 Small Helium- or CO_2-Cooled Experimental Loops 7
2. INHERENT SAFETY IN DESIGN 11
2.1 Inherent Safety of the Primary and Secondary Containment 11
2.2 Inherent Safety of the Experimental Loops 12
3. FACILITY DESIGN 14
3.1 General Arrangement 14
3.2 Experimenters' Cells 14
3.3 Experimenters' Utility Tunnel 17
3.4 Experimenters' Crane Bay 18
3.5 Shielding 19
3.6 Experimenters' Control Room 20
4. PRIMARY LOOP DESIGN 21
4.1 Introduction 21
4.2 Reactor Through-Tube Assembly 22
4.3 Experimental Stringer 49
4.4 Dummy Stringer 56
4.5 Mainstream Gas Cooler 58
4.6 Mainstream Gas Heater 65
4.7 Mainstream Gas Filter 66
4.8 Loop Pressure Drop 70
4.9 Loop Compressors 76
4.10 Auxiliary Blower 90
4.11 Mechanical Joints 91
4.12 Valves 99
4.13 Reflective Insulation 103
4.14 Top Dummy Shield Plug Assemblies 113
5. AUXILIARY SYSTEMS AND EQUIPMENT DESIGN 115
5.1 Introduction 115
5.2 Bypass Gas-Cleanup System 116
5.3 Gas Transfer and Storage System 120

5.4 Gas-Sampling System 128
5.5 Fuel-Handling Equipment 135
5.6 Water Systems 142
5.7 Electric Power Systems 159
5.8 CO_2 Supply System 163
5.9 Helium Supply System 169
5.10 Gas Distribution System 174
5.11 Buffer Gas System 180
5.12 Experimental Assembly Removal Cooling System 187
5.13 Through-Tube Pressurizer and Loop Fill System 191
5.14 Loop Offgas System 195
5.15 Sniffer Gas System 199
5.16 Through-Tube Nozzle Cooling System 202
5.17 Plant and Instrument Air 204
5.18 Communications and Alarm Systems 206
6. PRIMARY AND SECONDARY CONTAINMENT DESIGN 208
6.1 Loop Containment Philosophy 208
6.2 Allowable Stress 211
6.3 In-Cell Piping 221
6.4 Out-of-Cell Piping 226
6.5 Pipe-Chase Cooling System 235
6.6 Experimenters' Cell Design 236
6.7 Cell Ventilation 238
6.8 Cell Washdown 241
6.9 Cell Penetrations 243
6.10 Cell Pressure Relief 244
6.11 Cell Temperature and Humidity Control 245
6.12 Flow Restrictor 248
6.13 Cell Pressure and Leak Tests 249
6.14 Missile Protection 251
6.15 Cell Access – Personnel and Machinery 257
7. INSTRUMENTATION AND CONTROLS
7.1 Design Philosophy 263
7.2 Experimenters' Control-Room Equipment 264

7.3 Mainstream Instrumentation 266
7.4 Experiment Safety and Protective Actions 273
7.5 Digital Data-Handling and Computer System 277
7.6 Auxiliary Instrument and Control Boards 282
8. SPECIAL OPERATIONS
8.1 Instrumented Experimental Assembly Handling 285
8.2 Through-Tube Replacement 288
8.3 Decontamination 296
8.4 Radioactive Waste Disposal 304
8.5 In-Cell Maintenance 304

PROJECT REFERENCES

The reader is referred to the following documents for additonal information concerning the EGCR experimental loop design:

ORNL CF 61-6-2 EGCR Experimental Loops Preliminary Design Drawings

ORNL CF 61-6-3 EGCR Experimental Loops Design Criteria

ORNL CF 61-6-4 EGCR Experimental Loops Design Analyses

ORNL CF 61-6-5 EGCR Experimental Loops Specifications

1. INTRODUCTION

1.1. The EGCR

The Experimental Gas-Cooled Reactor (EGCR) is the embodiment of one of several gas-cooled reactor designs now being developed in the United States for the purpose of producing competitive nuclear power. To further gas-cooled reactor technology, the EGCR has been designed to accommodate up to four gas-cooled experimental loops plus several experimental fuel elements in the open core. The establishment of this versatile experimental facility is expected to further the development of advanced fuel element concepts while the reactor is performing its prime function of serving as a power-producing prototype for demonstrating the reliability of the gas-cooled reactor.

The EGCR is being built on a bluff overlooking the Clinch River about 2 miles east of the Oak Ridge National Laboratory. The power plant is scheduled for completion late in 1962. An artist's conception of the completed plant is presented in Fig. 1.1.1.

The reactor is fueled with UO_2 clad in stainless steel. The moderator is graphite, and the cooling gas is helium at a pressure of 315 psia. The reactor is designed to produce approximately 85 Mw of thermal power at a gas inlet temperature of 510°F and an outlet temperature of 1050°F. The reactor thermal power is transferred to water in two boilers to generate superheated steam at 1250 psia and 900°F. This steam is then passed through a turbogenerator to produce approximately 25 Mw of electrical power. Section views of the plant are shown in Figs. 1.1.2 and 1.1.3.

The reactor core is a vertical cylinder made up of 16-in.-square graphite columns that are 19 ft 4 in. high. Vertical channels through the graphite columns are provided to accommodate the fuel elements, control rods, and experimental loops. The reactor core is housed inside a cylindrical pressure vessel with an inside diameter of 20 ft and an inside height of 46 ft.

The reactor containment vessel is a 114-ft-diam cylinder with curved top and bottom. Its over-all height is 216 ft. Access to the containment vessel is through a personnel airlock and an equipment airlock.

The EGCR is designed for fuel charging and discharging while operating at full power. A charge machine located beneath the reactor will load and unload the fuel assemblies. A service machine above the reactor will be used to handle the control rods, open core experimental assemblies, and loop experimental assemblies.

UNCLASSIFIED
ORNL-LR-DWG. 44360

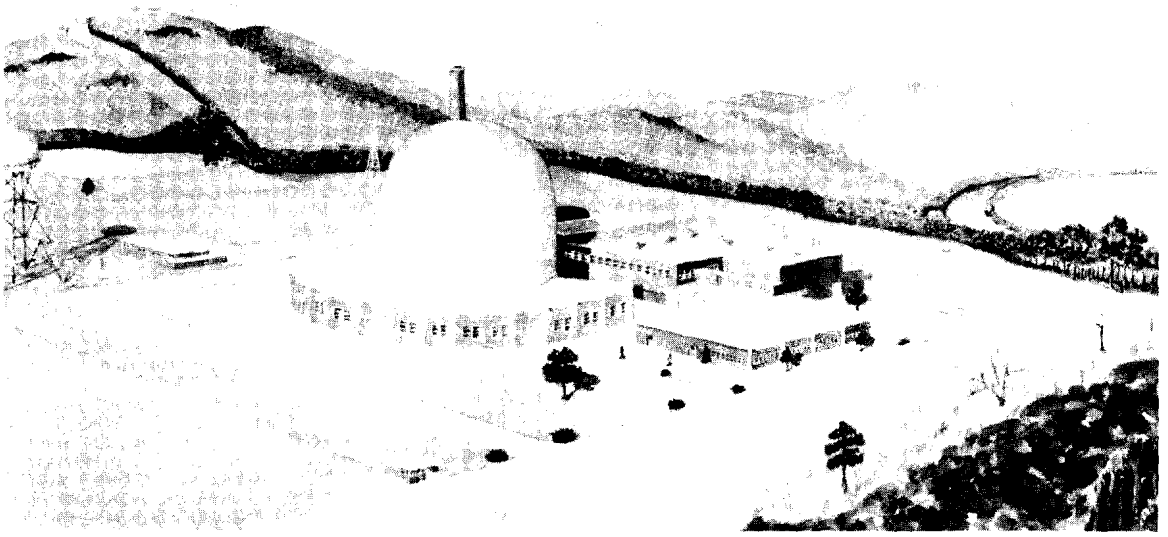

Fig. 1.1.1. The Experimental Gas-Cooled Reactor Plant.

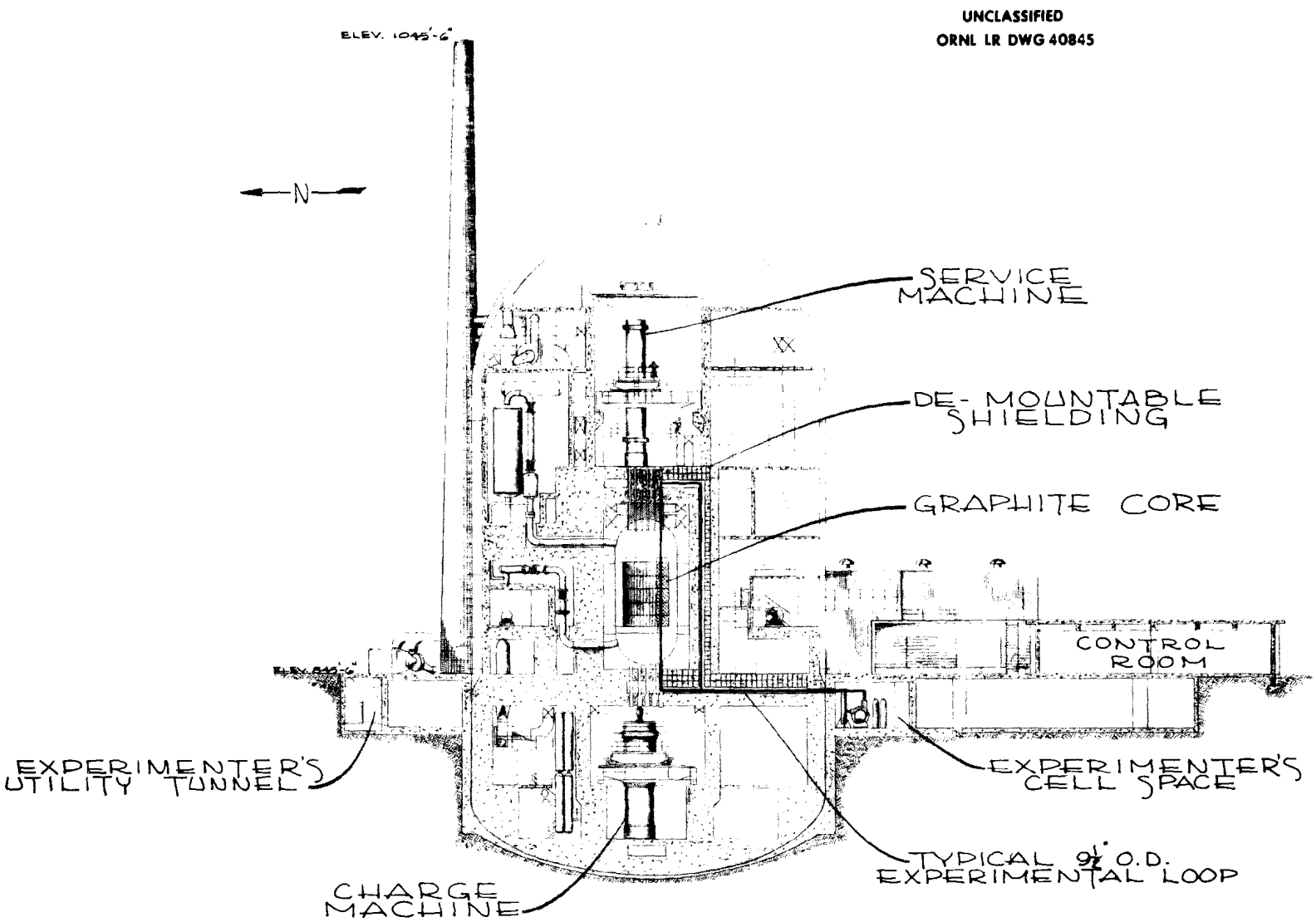

Fig. 1.1.2. EGCR Section View Reactor Building.

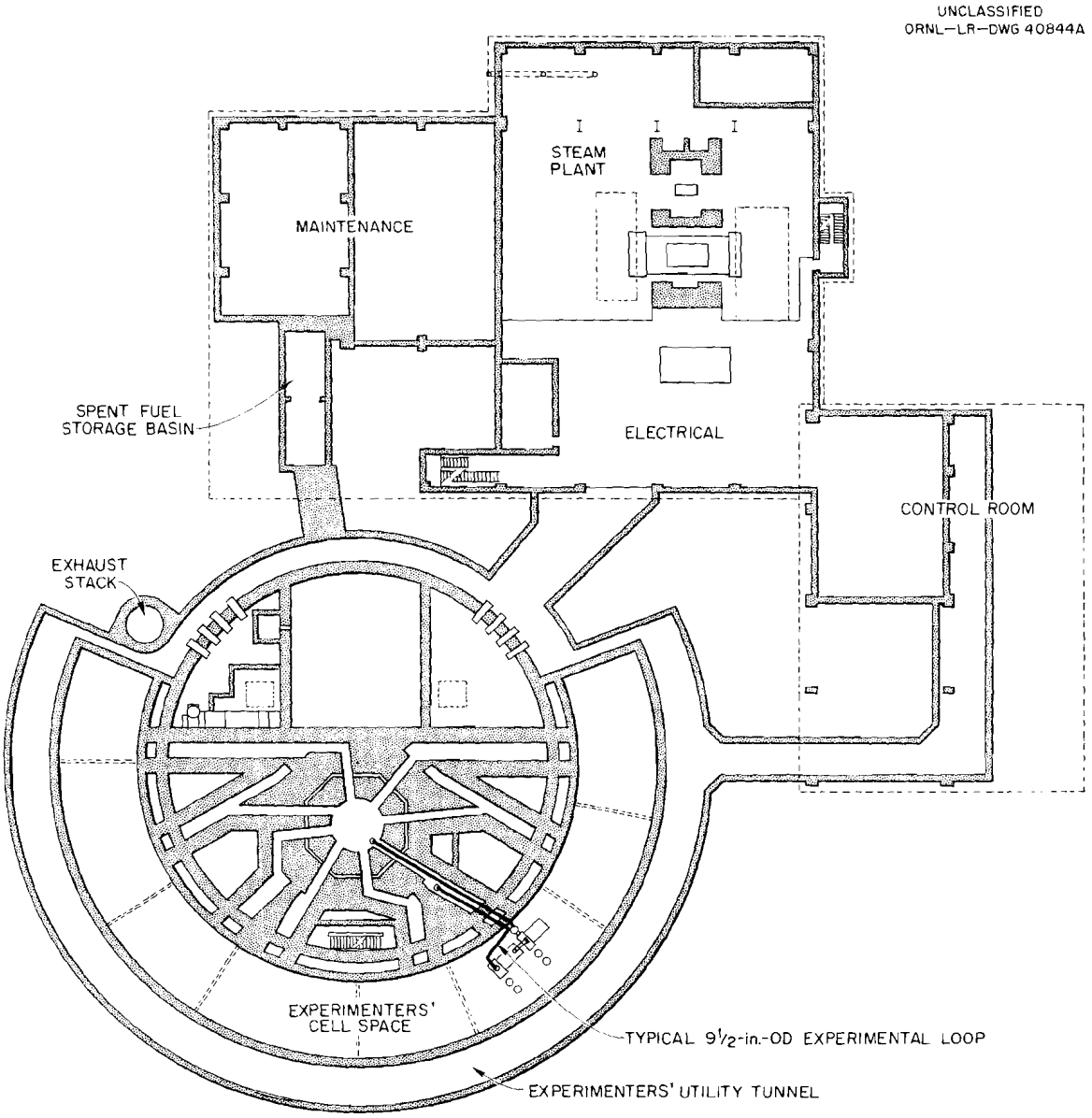

Fig. 1.1.3. EGCR Floor Plan Basement – At Elev. 841-0.

1.2. Provisions for Experimental Facilities in the EGCR

Experimental facilities for the EGCR will be of two types – those utilizing experimental loops passing vertically through the reactor core and those using open fuel channels within the reactor core (open-core experiments). Provisions have been made for the installation of up to four experimental loops in the core. Two of these loops (designated as TS-2 and TS-3) will utilize 5 1/2-in.-o.d. stainless steel tubes passing through the core along an axis which is about 17 in. from the central axis of the core (coordinate positions -3, -3 for TS-2 and -3, +3 for TS-3). The other two loops (designated as TL-1 and TL-4) will utilize 9 1/2-in.-o.d. tubes about 68 in. from the central axis (coordinate positions +12, -12 for TL-1 and +12, +12 for TL-4).

Experimenters' Cells. Space has been provided to house the loop equipment required to circulate cooling gas through the reactor through-tubes. This space is in the form of a semicircular-shaped room approximately 24 ft wide by 15 ft deep by 291 ft in mean length located around the periphery of the reactor containment vessel (see Fig. 1.1.3, sec. 1.1). This room is located below ground level with the top of its roof at ground level. The roof is constructed of ordinary concrete 3 ft thick to provide the necessary radiation shielding. The space inside the room can be divided into as many as eight equal-sized cells by removable gas-tight metal bulkheads that are 18 in. thick and filled with metal punchings. These bulkheads provide sufficient radiation shielding to permit personnel to work in adjacent cells while the loop equipment in a given cell is operating.

Each experimenters' cell is fully lined with a gas-tight steel liner to provide safe containment of any gas released from the experimental loop equipment. The cell liner is designed to contain all loop gas released to the cell. A 32-in. rupture disk is provided from each cell to the reactor containment vessel to relieve the cell pressure in case reactor gas should also be released to the cell through a rupture in the reactor through-tube and the loop piping.

Personnel access to each cell is provided by a portable personnel airlock which can be positioned over a special hatchway built into the roof of each cell. Access to the cell during major maintenance is provided by removing several roof plugs and cutting out a section of the cell liner. The resulting opening is 11 1/2 ft wide by 26 ft long.

Pipe Chases. The experimental loop piping between the experimenters' cells and the reactor through-tubes will run through pipe chases in the reactor biological shield (see Figs. 1.1.2 and 1.1.3, sec. 1.1). The inlet pipe to the through-tube will run horizontally through the lower biological shield to the lower pressure vessel nozzle. The return piping will run horizontally through the upper biological shield to a vertical pipe chase near the external face of the reactor biological shield. Space

is provided in the vertical chase for a loop cooler. From the bottom of the vertical chase, the piping will run horizontally to the experimenters' cell.

Utility Tunnel. A utility tunnel is provided next to the experimenters' cells to accommodate electrical and instrument conduits, gas and air supply lines, cooling water lines, and ventilation system ducts. This tunnel is approximately 17 ft deep by 12 ft wide by 388 ft in mean length. It is situated adjacent to the outer periphery of the experimenters' cells. The top of the utility tunnel roof is at ground level. Personnel access to the utility tunnel is through corridors from the turbine building and the control building. Sufficient shielding is provided by the outer walls of the experimenters' cells to protect personnel in the utility tunnel.

Crane Bay. A crane bay is provided in the space directly above the experimenters' cells and the utility tunnel. This space is enclosed by corrugated Transite siding and a built up roof that abuts the reactor containment vessel (see Fig. 1.1.1, sec. 1.1). The ceiling clearance is approximately 31 ft. The bay is serviced by a 20-ton traveling-bridge crane for removing the cell roof plugs and components from the experimenters' cells. Two equipment and truck access doors and four personnel doors to the crane bay are provided.

Control Room. The experimenters are provided with a control room which is located in the main reactor control building. This control room encompasses an "L" shaped area of approximately 4700 ft^2. Approximately 40% of this area is over a basement, while the balance is located on top of earth fill. Wiring access to the control panels in the earth fill area is by means of an overhead cable tray and in the area over the basement by means of floor slots.

Loop Piping. The major portion of the loop piping will not be installed until such time as a particular loop design is authorized for construction. Since the construction authorizations may come after reactor construction is completed and the reactor has run at power, there are certain piping provisions that must be made now while critical areas around the reactor pressure vessel and in the pipe chases are still accessible and present no radiation hazard.

In order to make piping provisions it was necessary to complete a fairly detailed loop design. In the case of the small through-tubes (TS-2 and TS-3) the design was carried through in detail, as reported in Section 1.3. For the large through-tubes only an educated guess could be made as to their future use. In order to specify materials and piping it was decided that one of the large through-tubes (TL-1) should incorporate design provisions which would permit it to accommodate a steam-cooled experimental loop. The other large through-tube (TL-4) was to incorporate provisions for accommodating a hydrogen-cooled loop or some other type of loop requiring extra containment provisions. The requirements of safe containment of hydrogen led to the selection of a double through-tube for

this loop. The loop piping selected for the small through-tubes and single large through-tube was 6-in. sched.-80 type 347H stainless steel. The large double through-tube was provided with 4-in. sched.-80 type 347H stainless steel piping. All installed loop piping will be provided with secondary containment piping.

All lower chase loop piping from the reactor pressure vessel to the experimenters' cell and all upper chase piping from the reactor pressure vessel to the vertical pipe chase is being installed during reactor construction. The vertical chase piping, except for a short run of lower chase piping attached thereto and leading to the experimenters' cell, will be fabricated when the loop is installed.

Storage Holes. Two experimental fuel assembly storage holes are provided for storage of irradiated fuel assemblies. These storage holes are located in the reactor biological shield at the west end of the service machine room. One hole is located at each end of a row of control rod storage pits.

1.3. Small Helium- or CO_2-Cooled Experimental Loops

A preliminary design and a hazards evaluation has been completed for two small helium- or CO_2-cooled experimental loops to utilize the two small through-tube facilities (TS-2 and TS-3). These loops will utilize the 5 1/2-in.-o.d. through-tubes and are designed to use either helium or CO_2 as the loop coolant.

In addition to designing the small loops, it was necessary to carry through a detailed design of the reactor pressure vessel nozzles, loop piping, and storage holes mentioned in Section 1.2, plus several other design studies. This work is also reported or referenced in this document.

Design Conditions. The small helium- or CO_2-cooled experimental loops have been designed to permit experimentation at any temperature and pressure within the bounds of the eight design points indicated in Table 1.3.1. For example, any pressure between 500 and 1000 psia, any experiment power not exceeding 1500 kw, and any test section outlet mixed mean gas temperature up to 1050°F can be used, as long as the combination of these variables lies within the bounds of the design points.

Although the loop design limits the test section mixed mean gas temperature to 1050°F, higher experiment coolant gas temperatures can be achieved by attemperation (bypassing a portion of the loop gas around the experimental section and mixing it with the experiment gas at the experimental section outlet end).

A basic assumption in the loop design is that some of the experimental assemblies will be of a type that will release large quantities of fission

Table 1.3.1. Design Conditions for Small Helium- or CO_2-Cooled Experimental Loops

	Design Condition Number							
	1	2	3	4	5	6	7	8
Coolant Gas	CO_2	CO_2	CO_2	CO_2	He	He	He	He
Test section power, kw	1500	335	1500	335	1500	335	1500	335
Gas flow, lb/hr	41 300	41 300	41 300	41 300	9190	9190	9190	9190
Nominal operating pressure, psia	1000	1000	500	500	1000	1000	500	500
Nominal operating temperatures, °F								
Test section inlet	600	950	600	950	600	950	600	950
Test section outlet	1050	1050	1050	1050	1050	1050	1050	1050
Piping, reactor to cooler	1050	1050	1050	1050	1050	1050	1050	1050
Piping, cooler to heater								
Heater on maximum	550	900	550	900	550	900	550	900
Heater off	600	950	600	950	600	950	600	950
Piping, heater to reactor	600	950	600	950	600	950	600	950
Maximum permissible test section pressure drop, psi	53.0	8.9	26.2	4.4	21.2	3.5	10.6	1.8
Total loop plus maximum test section pressure drop, psi								
Heater on maximum	60.7	18.8	41.6	24.2	26.1	9.7	20.3	14.1
Heater off	60.9	19.0	42.0	24.7	26.2	9.8	20.6	14.4
In-pipe gas velocity,[a] ft/sec								
Piping, reactor to cooler	23.7	23.7	47.2	47.2	57.8	57.8	115.5	115.5
Piping, cooler to heater								
Heater on maximum	15.4	21.2	30.7	42.3	38.7	52.2	77.0	104.5
Heater off	16.3	22.0	32.2	44.0	40.5	54.2	80.5	106.8
Piping, heater to reactor	16.3	22.0	32.2	44.0	40.5	54.2	80.5	106.8

[a]For 6-in. sched.-80 pipe.

products (so called dirty experiments) during normal operation. Provisions have been made to operate and maintain the loop even if the loop gas is highly radioactive.

A schematic flow diagram of the experimental loop is shown in Fig. 1.3.1. The components through which the mainstream loop gas normally flow are the in-pile test section (through-tube) containing the experimental assembly, the mainstream gas cooler, the mainstream gas filter, three loop compressors in series, and the mainstream gas heater. In addition, there is an auxiliary blower in parallel with the loop compressors to take care of a complete failure of the latter.

The function of the mainstream gas cooler is to remove the heat generated by the experimental assembly. The mainstream gas filter is provided to remove any particulate matter in the gas stream. This should help to concentrate the loop gas activity in one region where it can be most effectively shielded. The loop compressors provide the positive head required to overcome the loop gas pressure-drop losses around the loop. The mainstream gas heater is required to preheat the loop during startup and to heat the loop during loop operation at low reactor power or if the loop experimental assembly does not contain fissionable material.

The principal auxiliary equipment and services for the loop include a bypass gas-cleanup system for continuous on-stream fission-product removal, a gas transfer and storage system for the transfer and storage of loop gas, and an offgas system to take care of processing loop gas for release to the EGCR stack.

Other systems required to service the loop include a gas-sampling system to take gas samples from various parts of the loop, a water system to cool various loop components, an electrical system to supply power to the loop compressors, heater and other electrical components, a gas-supply system to supply helium and CO_2 to the loop, a gas-distribution system to distribute the gas, and various leak-detection systems.

All loop equipment, except the through-tube and cooler, that contains radioactive gas is located in the experimenters' cell. The required services are provided to the loops from the experimenters' utility tunnel.

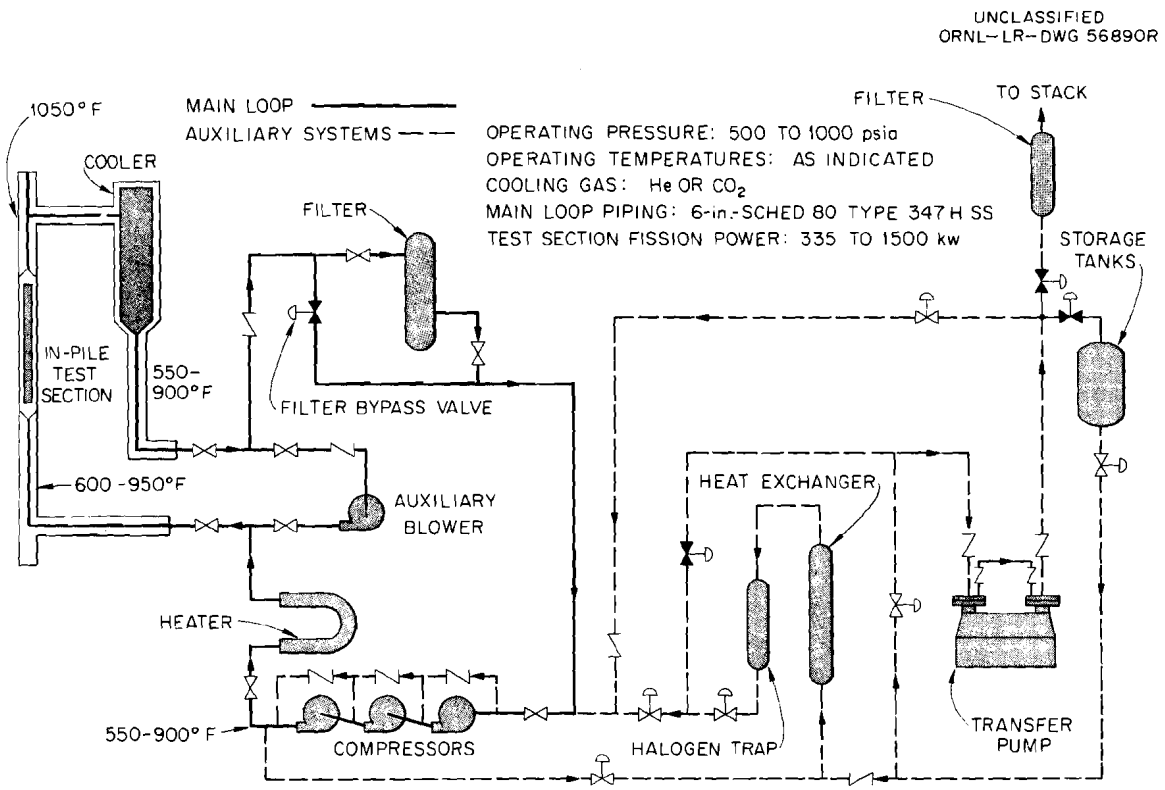

Fig. 1.3.1. EGCR Experimental Loop Flow Diagram.

2. INHERENT SAFETY IN DESIGN

In all aspects of the experimental loop design, safety and continuity of operation have been foremost considerations. The experimental loop design complies with all generally accepted standards and codes to the extent that these are applicable to the loops. Components which are believed to have low reliability have been avoided wherever possible. Where such components are unavoidable, spare components have been provided in such a way that a spare can immediately perform the function of the failed component. All loop components which normally contain radioactive loop gas have been enclosed in at least one additional containment system.

2.1. Inherent Safety of the Primary and Secondary Containment

The best known design procedures were employed to provide a more than adequate design of the primary and secondary loop containment. As stated in Section 6.2, methods outlined in the Navy Code were used as a design basis for the experimental loops. It was recognized that the Navy Code is primarily intended for pressurized-water reactors, and allowable stresses for structural materials are given in the Navy Code only for temperatures up to ~700°F. It was further recognized that material behavior at elevated temperatures has not been completely determined. However, from an engineering viewpoint, the design procedures, as outlined in the Navy Code, are believed to be the best available at this time. The allowable stresses at the operating temperatures of the EGCR experimental loops were determined from experimental data published in the literature. Also, the design was not considered acceptable unless it met the requirements of the ASME or ASA Codes (and Code cases), as applicable.

In addition to the design methods used, the basic design philosophy chosen for the experimental loops led to an inherently safe facility. For instance, adequate instrumentation with appropriate backup instruments and two-out-of-three safety circuitry was provided to detect all foreseeable loop malfunctions. Provisions were made for an alternate power source (from Y-12) in case of a power failure, and an auxiliary blower was provided to assure afterheat removal if the mainstream compressors failed following loop depressurization.

A well-designed loop secondary containment system was provided to give adequate protection in case of a primary containment failure (primary containment is here defined as all piping and components that normally contain loop gas during any phase of loop operations). The secondary containment of the primary loop system consists of the reactor pressure vessel (and its appendages), the loop containment pipe, and the experimenters' cell. It should be noted that all out-of-cell portions of the loop are

triply contained (by the reactor containment vessel) with respect to the EGCR plant environs.

The reactor vessel provides secondary containment for all primary containment failures inside the reactor pressure vessel. The mass of experimental loop gas is small compared with the mass of reactor gas. If a loop gas release into the reactor gas system should occur, the small increase in reactor gas pressure will not lead to a failure of the reactor pressure vessel.

Secondary containment of the out-of-cell loop piping leading to the reactor through-tube is provided by a containment pipe which is an appendage to the reactor pressure vessel. A failure of the primary loop piping at this point will cause a short-duration pressure of approximately 800 psi inside the secondary containment pipe (reactor pressure vessel appendage) and a containment pipe temperature approaching 570°F. The resulting stress in the secondary containment pipe will be about 16 000 psi, which is within the ASME allowable value of 16 500 psi. The stress-rupture strength of the containment pipe is approximately 120 000 psi for times up to 1000 hr at 600°F. Further, the instantaneous containment pressure of 800 psi will bleed down to the reactor operating pressure of 315 psia.

The secondary containment pipe for the mainstream loop piping leading from the reactor to the cooler and back to the experimenters' cell is not an appendage to the reactor pressure vessel. A failure of the primary containment in this case may increase the secondary containment pressure up to approximately 600 psia and the secondary containment pipe temperature to about 570°F. However, the stresses in the secondary containment pipe even for this highest pressure will only be of the order of 13 000 psi, that is, well below the 1000-hr rupture stress of approximately 120 000 psi and within the ASME allowable value of 16 500 psi.

For the in-cell experimental loop piping and components, a gas-tight cell liner provides the secondary containment. The cell with its liner is designed to withstand a pressure of 12 psig. The anticipated maximum cell pressure following a failure of the primary containment in the cell is 9 psig for a single cell arrangement. If two experimenters' cells are used for each loop, this pressure will be reduced 50%. Each experimenters' cell is equipped with a rupture disk set to relieve the pressure to the reactor containment vessel at 10 to 12 psig in the event a double failure of the primary containment (one failure must be inside the reactor pressure vessel) releases the reactor gas into the experimenters' cell.

2.2. Inherent Safety of the Experimental Loops

As indicated in Sections 2.1 and 6.2, the best know procedures were used in the design of the EGCR experimental loops. The Navy Code was used as basis of design. Further, the design had to meet the requirements

of the ASME and ASA Codes (and Code cases), as appropriate. From a theoretical viewpoint, the design of the EGCR experimental loops is considered to be more than adequate in view of the nominal factor of safety of from 3 to 4 inherent in the Codes. In addition, conservative calculational methods, procedures, and assumptions were observed in meeting the code requirements, and independent checks were made wherever possible. For example, the pipe stress calculations were performed at ORNL, using the SHARE GS 3812 IBM 704 pipe stress program, and independently at the M. W. Kellog Co.; the agreement of the results was within 1%.

The satisfaction of code requirements is not considered to be prima facie evidence of loop safety or the principle criterion for endorsement of the loop design. Numerous tests will be performed to verify all questionable areas of the loop design. Some of the more important tests are: (1) tests to verify performance and reliability of the cooler, heater, filters, nozzle tee section bearings, valves, mechanical joints, and other critical components or component features, (2) an extensive determination of component leakage rates, (3) an evaluation of the reactor through-tubes, including buckling tests, insulation tests, and orifice flow tests, (4) an exhaustive testing of compressor performance and reliability, and (5) the construction and operation of out-of-pile mockups of large segments of the experimental loop complex.

In addition, tests will be performed on auxiliary equipment as deemed necessary, for example, mockup tests of the welding machine and remote-welding procedures. As backup, the gas-cooled loop now being installed in the ORR will give a broad base of experience with many similar components and with gas-cooled loops in general.

Rigid specifications have been written to cover components, materials, inspection, welding procedures, and testing procedures. These specifications are based on years of loop and reactor construction experience at ORNL. The material specifications meet, as a minimum requirement, the ASTM Standards.

During construction all welds will be rigidly inspected and leak tested. After installation, piping and components will be pneumatically or hydrostatically pressure tested, as specified by the ASME Code.

3. FACILITY DESIGN

3.1. General Arrangement

The facility required to house the EGCR experimental loops is made up of the experimenters' cells, utility tunnel, crane bay, and control room. As shown in Figs. 1.1.2 and 1.1.3 (see sec. 1.1), the experimenters' cells are a series of concrete compartments located around most of the periphery of the reactor containment vessel. The cell roofs are at ground level. Radially outward from the experimenters' cells is the experimenters' utility tunnel. This tunnel completely encircles the reactor containment vessel. One portion of the tunnel is adjacent to the outer periphery of the experimenters' cells. The remainder follows the periphery of the reactor containment vessel. The tunnel roof is also at ground level. The experimenters' crane bay is located directly above the experimenters' cells and that portion of the utility tunnel which is adjacent to the cells. The crane bay is equipped with a 20-ton traveling-bridge crane that operates on circumferential tracks and is enclosed by a Transite-sided structure abutting on the reactor containment vessel (see Fig. 1.1.1, sec. 1.1).

The experimenters' control room is an L-shaped area within the reactor control building. About 40% of this area is located above the control building basement, and the remainder is located on top of earth fill. An underground corridor connects the control room basement to the experimenters' utility tunnel.

The experimenters' cells are limited acess areas and are shielded by concrete to limit the maximum dose rate outside the cells to approximately 2.5 mr/hr. In order to achieve this, the roof of each cell and the cell walls adjacent to the utility tunnel are concrete up to 3 ft thick. The walls between individual cells are removable carbon steel bulkheads filled with steel punchings.

3.2. Experimenters' Cells

The experimenters' cells are arranged around the periphery of the reactor containment vessel. These cells are located below ground, with the top of the cell roof at ground level. The general arrangement of the experimenters' cells is shown in Figs. 1.1.2 and 1.1.3 (see sec. 1.1). Adjacent cells are separated by removable bulkheads so that the cell area can either be expanded into one large room, if all bulkheads are removed, or divided into as many as eight identical cells, if seven bulkheads are inserted. The cell is 24 ft wide and 15 ft 3 in. deep. The length of the inside wall of the undivided cell area is approximately 244 ft, while the length of the outside wall is 388 ft. The experimenters' utility tunnel is located around the periphery of the outside wall.

The concrete roof plugs that form a part of the roof of each experimenters' cell are removable. The resulting opening (11 1/2 ft wide by 26 ft in mean length) permits the removal and replacement of large loop components. Another penetration in the cell roof provides for personnel access through a portable personnel airlock (see sec. 6.15) into each experimenters' cell.

Each cell has a number of gas-tight penetrations for piping, electrical leads, etc. A 42-in. penetration is provided between the experimenters' cell and the reactor containment vessel for the penetration of the main loop piping and the demineralized-water lines. Another penetration in the same wall contains a 32-in. rupture disk for cell pressure relief (see sec. 6.10). The wall between the cell and the experimenters' utility tunnel has numerous penetrations, including penetrations for the cell ventilation system, the loop gas supply system, electrical lines, building air, etc. Each cell is provided with a 4-in. floor drain penetration. The floor drain line contains two valves in series to assure secondary containment. A detailed discussion of the cell penetrations is presented in Section 6.9.

In order to provide adequate radiation shielding for personnel working in the crane bay and utility tunnel, the experimenters' cell walls are designed with a sufficient thickness of concrete to reduce the dose rate in these adjacent areas to less than 2.5 mr/hr. In the original design the cell roof was 2 ft 3 in. of ordinary concrete and the outer wall was 2 ft of ordinary concrete. Subsequent shielding calculations indicated that these thicknesses were insufficient, so the roof thickness was increased to 3 ft of ordinary concrete, and 7 in. of Barytes concrete was added to the outer cell wall.

Shielding is provided between adjacent experimenters' cells by a removable bulkhead, as discussed above. This bulkhead is fabricated in the form of a hollow steel shell 18 3/4 in. thick. It is filled with steel punchings for shielding. This construction permits removal of the shielding aggregate by vacuuming the plenum when it is desired to remove the bulkhead. Removal of the aggregate reduces the bulkhead weight so that it can be handled by the experimenters' crane.

Each experimenters' cell is equipped with a carbon steel liner to provide leaktight secondary containment for the primary loop piping in the cell. The cell liner is designed to withstand a maximum internal pressure of 12 psig. A 32-in. rupture disk protects the cell against overpressure by relieving the overpressure to the reactor containment vessel if it exceeds 10 to 12 psig. The cell liner will be fabricated, leak tested, and patched by welding until its leakage does not exceed 1.0% of the weight of air in the cell at 12 psig over a 24-hr period.

The experimenters' cell liner is fabricated by seal-welding rectangular sheets of 10-gage carbon steel (ASTM-A246) to rectangular bar stock, which is, in turn, fastened to anchor bolts embedded in the concrete

walls, floor, and ceiling. The anchor bolts are placed in sleeves to allow lateral motion due to thermal expansion of the liner. The anchor bolt nuts are seal-welded to the anchor bolts and the cell liner. The liner on the removable roof hatch is seal-welded to the cell liner in such a manner that the seal weld is accessible from the top of the hatch. Removal of the hatch plugs requires that the seal be cut first. The liner is rewelded after replacement of the hatch plugs. After fabrication all exposed surfaces of the liner will be painted with Phenoline 300 or an equivalent solution.

During normal loop operation, cell ventilation will not be permitted, although the cell will be allowed to "breathe" via two small lines that bypass the main ventilation intake and exhaust valves (see sec. 6.7). Each of these bypass lines contains sufficient valving to provide safe isolation of the cell if a radioactive gas release into the cell should occur. Ventilation is available during major maintenance work in the cell. The ventilation is established by an induced-draft system. The ventilation rate can be varied from an average of 440 cfm to a maximum of 1760 cfm per cell. A more detailed description of the cell ventilation system is provided in Section 6.7.

Each experimenters' cell is cooled by two 50-kw air-to-water cell coolers using service water, which enters the cell from the experimenters' utility tunnel. During loop operation using CO_2, the cell air temperature will be maintained above 88°F by throttling the water flow to the cell coolers (or turning on the electric heaters, if necessary) to prevent the condensation of high-pressure CO_2 in the gas lines inside the cell. No temperature controls on the coolers will be required during helium loop operation. A thorough discussion of the cell coolers and cooling requirements is presented in Section 6.11.

The experimenters' cell is drained by means of a 4-in. line that goes to the EGCR warm waste system. The drain line is constructed of stainless steel. Secondary containment is maintained by two stainless steel ball valves (2 in. nominal) in series. These valves are equipped with pneumatic operators and are spring-loaded to fail closed. They are controlled by a water-level monitor upstream of the valves and are interlocked with the cell vent valves (see sec. 6.7). A minimum water level is maintained in the drain pipe next to the drain valves at all times to insure against cell gas leakage through the valves. Should water collect on the cell floor, the loop operator can drain the cell by opening the drain valves. The drain valves will automatically close when the water level in the drain pipe drops to 8 in. below the cell floor level.

Originally, it was recommended by Kaiser Engineers that a concrete floor be poured on top of a 3-in. sand cushion over the cell liner, with the contact surface between the concrete and the liner sealed with a resilient caulking compound. This floor would then serve as a wear floor and provide anchor supports for the in-cell piping. Because of the probable difficulties of decontaminating the concrete floor it is now anticipated

that it will not be installed. The loop piping will be anchored to the concrete floor below the cell liner with adequate seal-welding at the cell liner, and a grating will be installed to provide a wear floor.

3.3. Experimenters' Utility Tunnel

The experimenters' utility tunnel is a concrete tunnel of rectangular cross section that is approximately 17 ft deep by 12 ft wide. The main portion of this tunnel is adjacent to the outer periphery of the experimenters' cells and is approximately 380 ft long. The ends of this main portion of the tunnel are connected by a smaller tunnel which completes a circle around the reactor containment vessel. The utility tunnel is located below the experimenters' crane bay, and its roof forms a part of the crane bay floor at ground level.

At the present time, the only access to the experimenters' utility tunnel is through a single-entrance corridor from the turbine building. Because of the hazards associated with a single entrance to the tunnel, it is planned to provide additional openings for emergency exit. These will consist of hatchways through the tunnel roof into the experimenters' crane bay. The exact location and number of these exits will be determined at a later date.

The experimenters' utility tunnel contains most of the service lines for the experimenters' cells. Among the principle items located in the tunnel are the cell ventilation exhaust header, instrumentation and control connections between the cells and the experimenters' control room, electrical power cables to the cells, gas distribution lines from the gas and air supply systems, and service water lines for cell cooling. Most of the service lines, with the exception of the cell ventilation ducting, are located beneath a steel-grating floor which is mounted approximately 3 ft above the tunnel floor. Four water drains are provided along the concrete floor of the tunnel. These drains connect to the warm waste lines leading to the experimenters' and auxiliary sump tank. Each drain line contains a 4-in. manual ball valve that can be opened with a long-handled wrench from the utility tunnel.

The utility tunnel is equipped with an automatic fire alarm system. Water hoses and wall-mounted hand-operated CO_2 extinguishers are provided. The tunnel is equipped with standard and emergency lighting, and several forms of communication and alarms are provided (see sec. 5.18).

No special provisions have been made for forced ventilation of the utility tunnel. Some ventilation will be obtained whenever the cell ventilation system is operating, since the ventilation inlet valve to each cell is open to the utility tunnel, and a valve at the head end of the cell ventilation exhaust duct also opens to the utility tunnel. Sufficient shielding is provided between the experimenters' cells and the

utility tunnel to reduce the dose rate in the tunnel to less than 2.5 mr/hr during normal loop operation.

3.4. Experimenters' Crane Bay

The experimenters' crane bay consists of the space directly above the experimenters' cells and the experimenters' utility tunnel. It is a horseshoe-shaped area approximately 380 ft long by 46 ft wide. It is enclosed by corrugated Transite siding and a builtup roof that abuts the reactor containment vessel. The ceiling clearance is approximately 31 ft. The bay is serviced by a 20-ton crane.

Two equipment and truck access doors are provided. These are approximately 16 ft wide and 14 ft high. The rolling steel doors are motor operated from inside the crane bay. Four standard personnel doors are also provided. They are about equally spaced along the periphery of the crane-bay enclosure.

A 20-ton traveling-bridge crane, operating on a circumferential track having an inner radius of 61 ft and an outer radius of 101 ft (40-ft span), serves the experimenters' crane bay. The crane has a dual hoist system, a 20-ton hoist and a 5-ton hoist, each having a lifting height of 40 ft. The maximum lift clearance above the crane-bay floor is approximately 20 ft. The crane trolley is fed from a 100-amp, 460-v, 3-phase feedrail along the perimeter of the inner wall of the crane bay. The operation of the bridge, hoists, and trolley is controlled from the crane-bay floor by means of a pendant push-button control station suspended by a flexible cable from the trolley.

Three feet of concrete shielding is provided over all experimenters' cells containing loops. Above unused cells and above the utility tunnel the concrete is 2 1/4 ft thick. As a result, there is a 9-in. concrete ledge over all experimenters' cells that are used. Personnel hatchways to each of the eight experimenters' cells are provided (see sec. 6.15). The experimental loop compressor motor-generator sets are mounted above the experimenters' utility tunnel. It is planned to build an extension radially from the crane-bay enclosure to house the decontamination chemical unit (see sec. 8.3) and the helium and CO_2 supply systems (see sec. 5.8 and 5.9).

Artificial lighting is supplied by fifty-one 750-w fixtures located above the crane, four exit lights (two 25-w lights over each personnel door, with one on the direct-current emergency power system), and five 75-w wall-mounted lights on the direct-current emergency power system. Receptacles for 120-v and 460-v power are provided in the crane-bay area.

Communications include master telephone stations, sound-power phones, and a PA system (see sec. 5.18). No area radiation monitors are included

within the crane bay, but evacuation alarms and fire alarms are provided. Plant and instrument air are supplied (see sec. 5.17).

Wall-mounted water hoses and hand CO_2 extinguishers are included for fire fighting. At present, there are no provisions for ventilating the crane bay. However, structural provisions have been made for the addition of fans and louvers at a later date.

Project References

Preliminary Design Drawings (CF 61-6-2)

Floor Plan	D-40137
Radial Section	D-40138
Concrete Floor Slab and Hatch Plugs Floor Plan	D-42709

Specifications (CF 61-6-5)

CPFF Project EGCR Crane Enclosure	CPFF-S
20-Ton Bridge Crane with 5-Ton Auxiliary Hoist	JS-28-106

3.5. Shielding

The experimenters' cells are considered to be limited access areas and are shielded to give acceptable dose rates in accordance with tolerance levels for occupational exposure as specified by the International Committee on Radiological Protection.[1] The cell shielding is designed to limit the maximum dose rate outside the cell to approximately 2.5 mr/hr. This dose rate is assumed to be due to fission products circulating in the experimental loop gas and deposited on the interior surfaces of the loop equipment.

Shielding of the experimenters' cells is provided by the use of concrete for the roof and utility tunnel wall. The cell roof is ordinary concrete, 3 ft thick. The utility tunnel wall is a composite of 2 ft of ordinary concrete and 7 in. of barytes concrete (density, 210 lb/ft^3). The use of these two materials resulted from progressive design changes. The initial 2 ft of ordinary concrete was the thickness calculated during early design work. Further studies indicated that more shielding was needed. The 7 in. of barytes represented an effort to provide the necessary shielding, while at the same time conserving in-cell space.

The wall between adjacent cells is an aggregate-filled, carbon-steel bulkhead, 18 in. thick. This bulkhead is designed to be removable, thus

[1]Report of Committee II on Permissible Dose for Internal Radiation (1959), Health Physics 3, 3 (1960).

providing experimenters with additional cell space when required. A weight limitation of 20 tons imposed on the bulkhead by the capacity of the crane for servicing the cells made it necessary to specify filling of the bulkhead with an easily removable material. Consideration of shielding properties, cost, and mechanical properties led to the selection of easily removable steel punchings as the aggregate material.

Several component shields are needed and will be provided. At present, the mainstream gas filter shield is specified as 4 in. of lead. This shield is expected to give acceptable dose rates in all locations outside the cell. Cell penetrations and the bypass purification system are other examples of components and systems which may require additional shielding.

3.6. Experimenters' Control Room

The experimenters' control room is located in the reactor control building and encompasses an L-shaped area of approximately 4700 ft^2. About 40% of this area is serviced by the control building basement, while the balance is located on top of earth fill. The control room is situated in an air-conditioned open bay, with a 14-ft ceiling and a vinyl-tile-covered concrete floor. Wiring access to the control panels in the earth fill area is by means of overhead cable trays and in the basement area by means of floor slots.

The instrument panels and computer equipment will be brought into the control room through an 8- by 8-ft access door. This door is located on the west side of the control room at ground level. Another door, 5 by 8 ft, is also located on this side at ground level. Four additional doors provide access to the corridor between the experimenters' control room and the reactor control room.

The control building basement is 105 ft long by 50 ft wide with a 12-ft ceiling clearance. One corner of this room is walled-off to form a 62-ft-long by 37-ft-wide basement for the reactor control room. The remainder of the room forms the experimenters' control room basement. A 10- by 10-ft corridor 36 ft long connects the experimenters' control building basement to the experimenters' utility tunnel.

The communications and alarms in this basement include an intercom station, a P.A. system, a fire alarm, and an evacuation alarm (see sec. 5.18).

4. PRIMARY LOOP DESIGN

4.1. Introduction

Each of the experimental loops consists basically of a reactor through-tube, a mainstream gas cooler, a mainstream gas filter, three gas-bearing compressors in series, and a mainstream gas heater. The reactor through-tube is a 5 1/2-in.-o.d., 0.218-in.-wall tube extending straight through the reactor core between a top and bottom nozzle of the reactor pressure vessel. The through-tube provides a primary containment barrier between the loop gas (either helium or CO_2) and the reactor gas (helium) within the reactor pressure vessel. Instrumented fuel assemblies are placed in the reactor by insertion inside the through-tube as a subassembly of an experimental stringer. The experimental stringer is inserted through the run of a tee welded to the top nozzle. The experimental loop gas flows up through the through-tube into the experimental stringer, past the experimental fuel assembly, through the branch of the top nozzle tee, and to the mainstream gas cooler where the experimental fuel element power is transferred to a water-steam system.

The experimental stringer consists of a top nozzle breech closure (Bridgman closure) for sealing off the loop gas from the secondary containment system (upper sniffer region), a shield plug for maintaining the integrity of the reactor biological shield, a support structure for an instrumented fuel assembly, an instrumented fuel assembly, insulation for limiting heat loss to the reactor gas, and the instrumentation necessary to obtain useful data.

The mainstream gas cooler is a re-entrant tube heat exchanger with loop gas flowing around tubes containing boiling demineralized water. The cooled loop gas then flows to the mainstream gas filter inside the experimenters' cell. The entire loop gas flow passes through the filter where most of the particulate matter in the gas is removed. The loop gas then flows through three centrifugal gas-bearing compressors which are connected and operated in series.

Next, the loop gas flows through the mainstream gas heater which is a resistance-heated (high-current) U-shaped section of pipe, and returns to the reactor through-tube inlet. During normal loop operation the heater is used to adjust the gas inlet temperature entering the experimental fuel assembly. The heater is also used for preheating during loop startup, for experimentation without a fission heat source in the loop, and for testing.

Four mechanical pipe joints containing double metallic seals with a pressurized gas-buffered zone between the seals are required in each loop. These are located at the inlet and outlet of the filter and at the inlet and outlet of the three compressors in series. The mechanical

joints are used to facilitate removal of the compressors and filter. The buffer gas is used to detect seal leakage and provide partial protection against the leakage of radioactive loop gas into the experimenters' cell in the event of seal leakage. All valves in the main loop are manually operated and require entrance to the cell for operation. This prevents the very serious hazard of inadvertent isolation valve closure during loop operation.

Each experimental loop is provided with a dummy shield plug to be installed in the top nozzle while the reactor is in operation but there is no experimental assembly installed in the through-tube. A different type of dummy shield plug is provided for use while the reactor is in operation prior to installation of the through-tube. Each loop is also provided with a dummy stringer which is basically an experimental stringer with the instrumented fuel assembly replaced by a dummy (unfueled) fuel assembly. The dummy stringer is used for test purposes with or without the reactor in operation.

Project References

Design Criteria (CF 61-6-3)

EGCR Experimental Loop Criteria

Preliminary Design Drawings (CF 61-6-2)

Process Flowsheets

Main Loop	D-RD-9422
Schematic – Main Loop	E-RD-10108
Composite – Main Loop and Auxiliaries	F-RD-10311

4.2. Reactor Through-Tube Assembly

4.2.1. Through-Tube Assembly

Design Philosophy. The design of the reactor through-tube assembly is based on a welded-joint concept. Earlier designs by Kaiser Engineers contemplated the use of mechanical joints, as shown in Fig. 4.2.1, to permit replacement of the tube. The expansion joint was necessary to provide for differential thermal expansion between the through-tube and the reactor pressure vessel.

Since mechanical joints were not available that met the loop leak-tightness requirements and since the development of a double-seal mechanical joint of the size required (along with the complications of shielding the arrangement during tube removal) was not considered feasible, other ways for installing the tube were examined. The welded-joint concept was selected because it was considered the only way of obtaining a helium

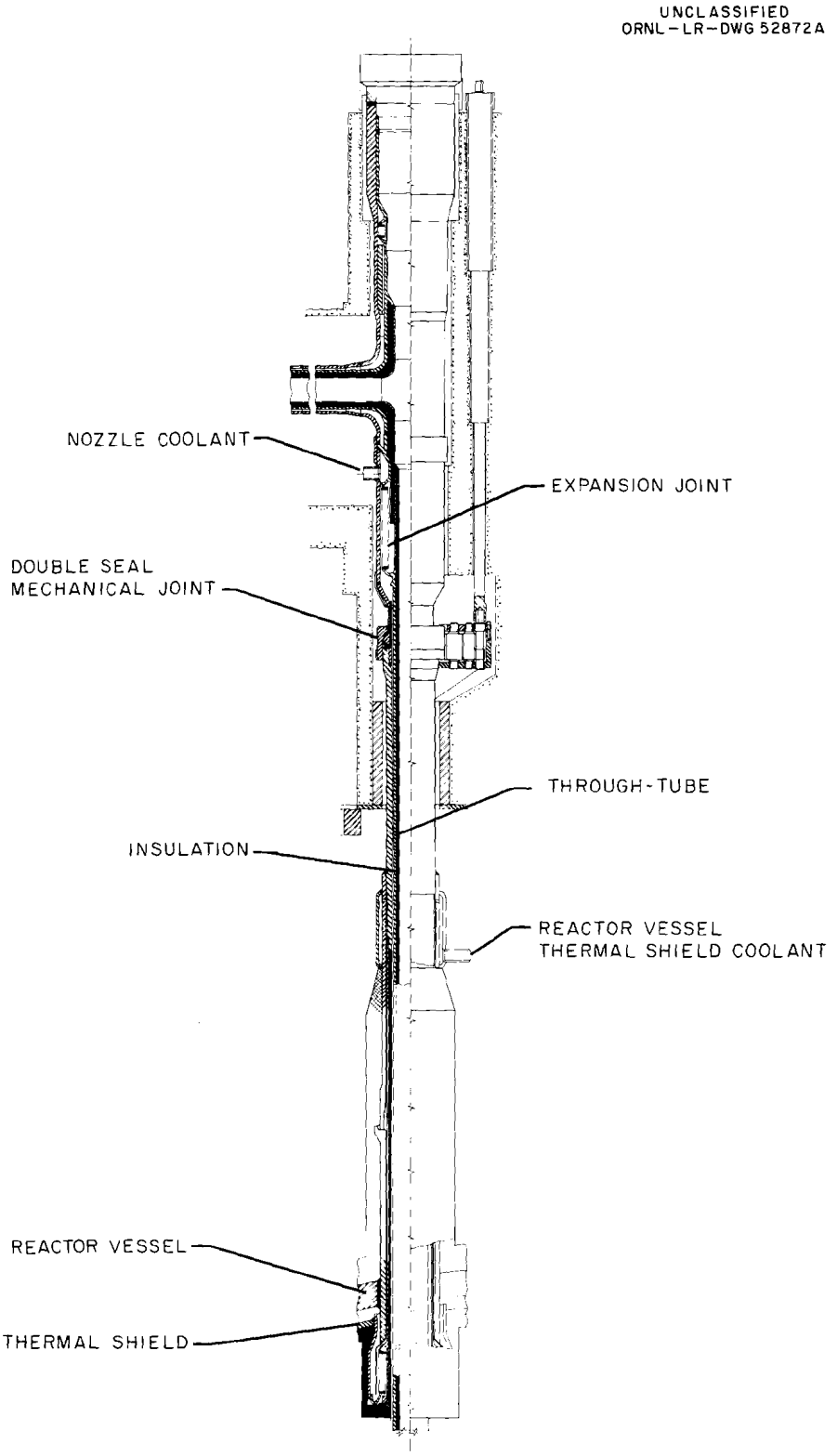

Fig. 4.2.1. Top Nozzle Tee Section for 5 1/4-in. Through-Tube with Mechanical Joint and Bellows.

leaktight joint at the high operating temperatures and pressures of the EGCR experimental loops. It also offered the advantage of permitting the largest through-tube size for a given size hole in the EGCR core.

Since commercial bellows were not available for operating at the maximum loop design temperature and pressure and an extensive development program would be required to obtain satisfactory bellows, other methods were examined to provide for differential thermal expansion. An expansion leg of the inlet loop piping was selected as the best method of providing for the relative expansion of the through-tube and the reactor pressure vessel. Expansion loops were considered more reliable than bellows and required very little development effort, although they did present a more difficult design and space problem.

Description. Three types of reactor through-tube assemblies are required for the EGCR experimental loop facilities: (1) a 5 1/2-in.-o.d. through-tube assembly for loops TS-2 and TS-3, (2) a 9 1/2-in.-o.d. through-tube assembly for loop TL-1, and (3) a double through-tube assembly with a 9 1/2-in.-o.d. outer through-tube and an 8 1/4-in.-o.d. (maximum) inner through-tube for loop TL-4. Each through-tube assembly consists of three subassemblies: (1) the through-tube (two through-tubes for TL-4), (2) the top nozzle inner and outer tees, and (3) the bottom nozzle inner and outer tees.

The top and bottom nozzle outer tees are welded to the reactor pressure vessel nozzle extensions and become a permanent part of the reactor pressure vessel. The branches of the inner and outer tees of each top nozzle are welded to the primary and secondary containment piping, respectively. This connects the primary loop piping to the through-tube and connects the secondary containment piping to the reactor pressure vessel, but the reactor gas is isolated from the secondary containment region. In the case of the bottom nozzle, the design permits the reactor gas to enter the containment region all the way back to the experimenters' cell. The reactor pressure vessel and the containment pipe attached to the bottom nozzle serve as secondary containment for the single through-tube loops (TS-2, TS-3, and TL-1). For the double through-tube loop (TL-4) the reactor gas does not extend beyond the top and bottom nozzles, and the outer through-tube serves as secondary containment.

Each through-tube is designed as a replaceable item. Final attachment of the tube to the reactor pressure vessel is performed by remotely welding the tube to the top and bottom inner tees. To replace the tube, the tube-to-tee welds are removed by remotely machining away the weld (see sec. 8.2).

Definitions. Primary containment components are defined as those components of the through-tube assembly that contain the loop gas. Secondary containment components are defined as those components of the through-tube assembly that contain loop gas after failure of a primary loop component.

For the single through-tube loop, the secondary containment components of the bottom nozzle contain reactor gas, and the secondary containment components of the top nozzle contain air during normal loop operation. For the double through-tube loop, the secondary containment components of both nozzles contain air or some other gas.

Partial Installation. The installation of the experimental loops will not be completed when the reactor is scheduled to start operating. However, the top and bottom nozzle tees will be fabricated and field welded to the reactor pressure vessel, and a long section of the primary and secondary containment piping will be field welded to the tees. Through-tubes will not be installed in any of the loops. Therefore, reactor gas will be allowed to extend from the top nozzle inner tee to the capped end of the upper primary piping. Reactor gas is normally contained in the region between the primary and secondary piping attached to the bottom nozzle tees; but since a through-tube is not installed, reactor gas will be contained in both the primary and secondary piping.

Design Criteria. The Navy Code[1] and the ASME Unfired Pressure Vessel Code, Section VIII, were used as a design basis for the primary and secondary containment (see sec. 6.2). The methods outlined in the Navy Code were used as a guide in performing a detail stress analysis of the components. All welding and associated liquid penetrant inspection performed on the through-tube assembly must meet the applicable ORNL welding and inspection specifications or an approved equivalent vendor's specification (see sec. 4.2.5).

The primary containment is fabricated of type 347H stainless steel. The highest temperature portion of the secondary containment is also fabricated of type 347H stainless steel. The lower temperature portion is fabricated of carbon steel. All type 347H stainless steel and carbon steel parts are fabricated in accordance with the applicable ORNL materials specifications (see sec. 4.2.5).

All parts of the top and bottom nozzle inner tees for loop TL-1 that are subject to axial thermal gradients and may be exposed to condensate (if the loop is cooled with steam) are overlaid with Inconel. The overlaid weld metal is in accordance with Section VIII of the ASME Boiler and Pressure Vessel Code, part UCL. The filler metal is BP-87 or BP-85 with a finished thickness of 1/6 in. The finished part is penetrant inspected in accordance with the applicable ORNL specification and radiographed in accordance with Section VIII of the ASME Code, Part UW-51, and ASTME-142-59T. The porosity size is limited to "medium" as described in Section VIII of the ASME Code, Appendix A. In calculating the strength of the nozzle, no credit was taken for the overlaid metal.

---

[1]Tentative Structural Design Basis for Reactor Pressure Vessels and Directly Associated Components, PB-151987, United States Department of Commerce.

4.2.2. Bottom Nozzle Tees

A bottom nozzle tee section for the 5 1/2-in.-o.d. loops (TS-2 and TS-3) is shown in Fig. 4.2.2. A bottom nozzle tee section for the 9 1/2-in.-o.d. single through-tube is shown in Fig. 4.2.3. A bottom nozzle tee section for the 9 1/2-in.-o.d. double through-tube is shown in Fig. 4.2.4.

Design Temperatures and Pressures. The primary containment is designed for 1100 psia at 975°F. The secondary containment is designed for 750 psia at 650°F. The bottom ball-lock assembly is designed for 750 psia at 650°F. Design provisions have been made to keep this closure below 350°F because of its elastomer O-ring.

Bearing Surfaces. The outer surface of the inner tee has a bearing surface that mates with an inner bearing surface on the outer tee. Since the bottom nozzle outer tee is filled with reactor gas, this bearing must be a sliding, dry-friction bearing which can operate in helium at temperatures up to 950°F. The base material for both bearing surfaces is type 347 stainless steel with a hardened surface overlay of approximately Rockwell C-48 hardness. This bearing acts as the through-tube and piping guide and transmits the pipe reactions to the nozzle.

The loading of the bearings is discussed in a design analysis (see references in sec. 4.2.5). The load imposed on the bearing surface in the bottom nozzle tee results from the pipe reactions of the mainstream piping (see Design Analyses, Appendix A.3.3, pp. A.3.3-1 to A.3.3-5). The resulting load on the bearing surface is derived from the axial loads and bending moments transmitted to the tee by the thermal growth of the mainstream piping. As a result of this load there is a tendency for the bearing to ride on its edges. This load is slowly applied as the piping comes up to loop temperature. The maximum load occurs at the end of the through-tube expansion. However, the loop piping will creep at loop temperature and thus relieve the pipe reaction load on the tee. Since this is a time-dependent function, no credit was taken for this load reduction in the bearing design.

Bearing surface tests under simulated loop conditions are in progress. The first test conducted revealed heavy scoring of the bearing surfaces, but the surfaces did not appear to self-weld. These first tests were with bearings having Stellite 6 against Stellite 6 surfaces with a Rockwell hardness of C-34. Additional tests are scheduled, including tests of Linde flame plate LW-IN against LW-IN with a surface hardness of Rockwell C-71 and Stellite 12 against Stellite 12 with a surface hardness of Rockwell C-48. All tests are being conducted with a constant radial load of 2000 lb on a full-scale bearing for a small through-tube. This load is approximately 400 lb greater than the calculated load from the pipe reactions. The actual slowly applied type of bearing loading could not be mocked up in a bearing test; therefore, the full test load was applied for the full length of the test stroke.

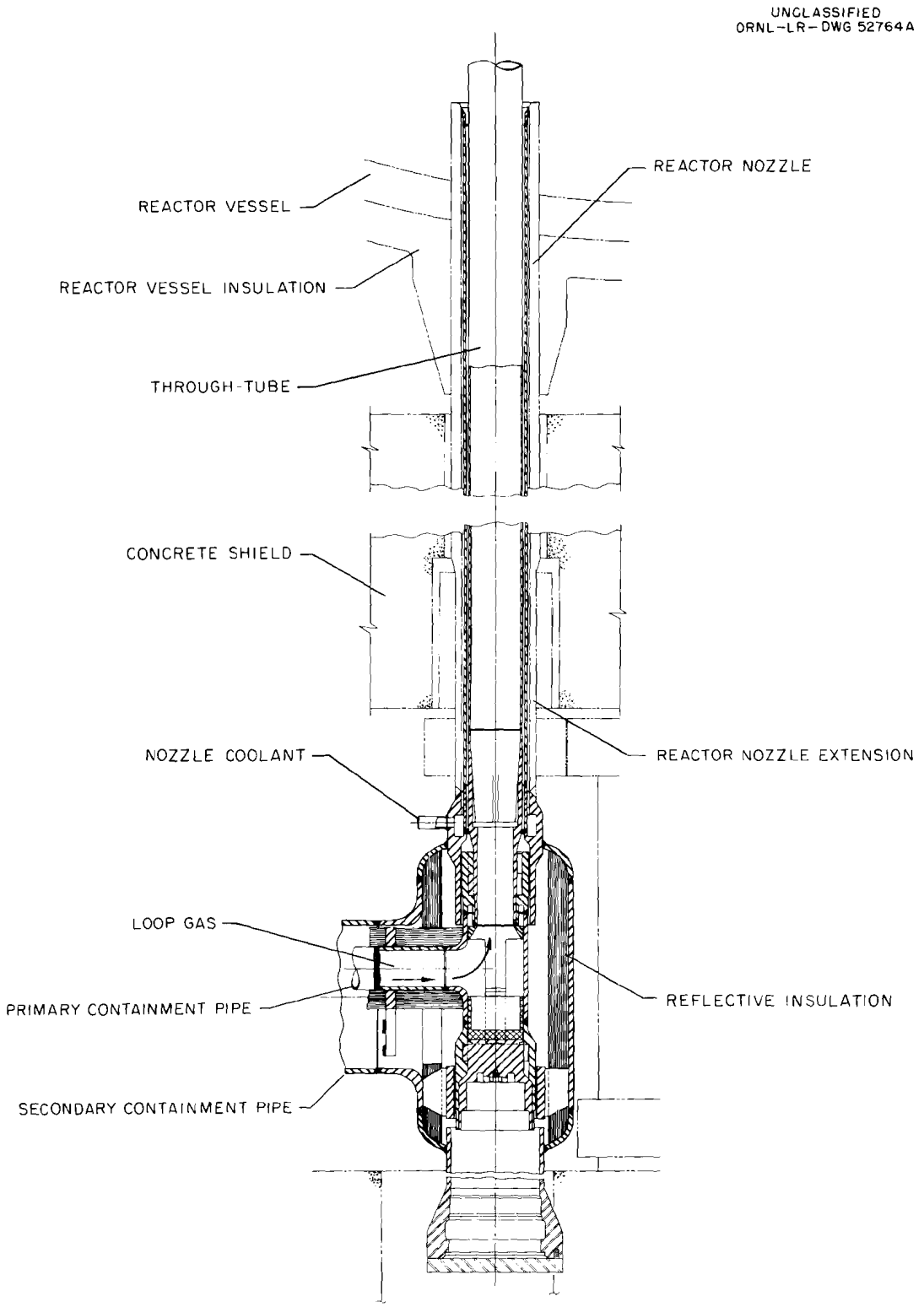

Fig. 4.2.2. Bottom Nozzle Tee Section for 5 1/2-in.-o.d. Through- Tube.

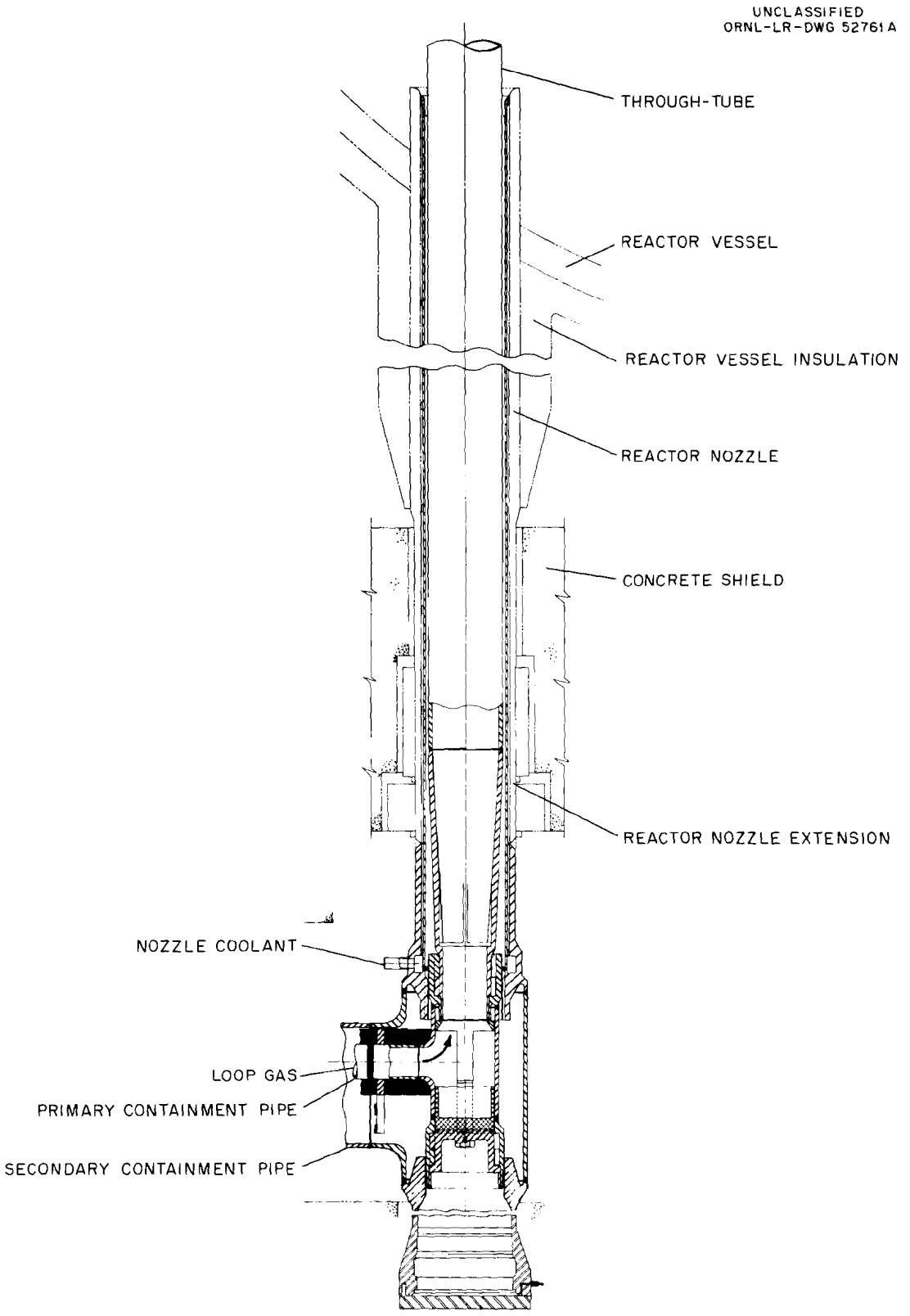

Fig. 4.2.3. Bottom Nozzle Tee Section for 9 1/2-in.-o.d. Single Through-Tube.

UNCLASSIFIED
ORNL-LR-DWG 62059

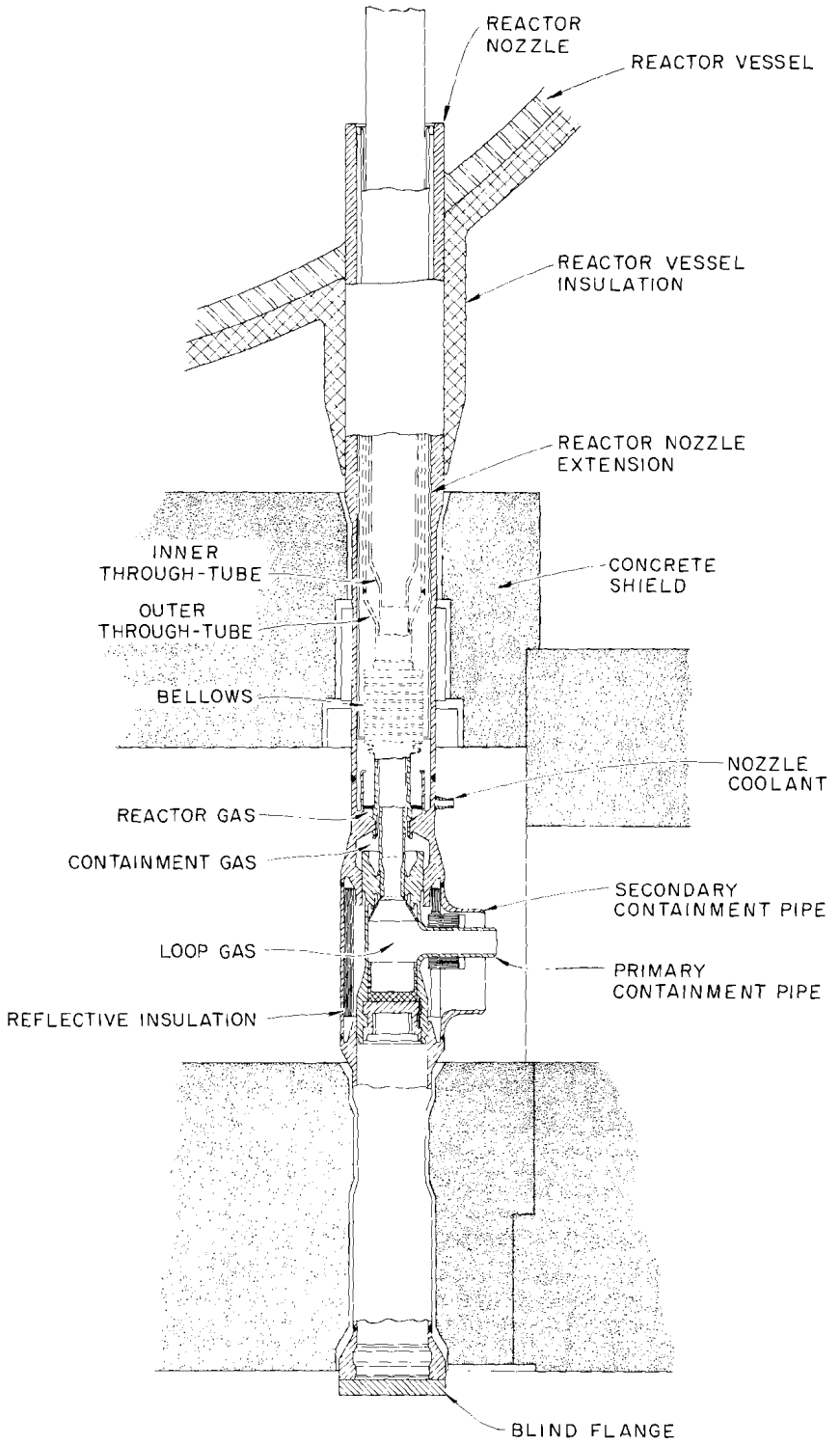

Fig. 4.2.4. Bottom Nozzle Tee Section for 9 1/2-in.-o.d. Double Through-Tube.

Ball-Lock Assembly and Blind Flange Leak Detection. Access to the inner tee breech plug is obtained by removing the bottom nozzle blind flange and the ball-lock assembly and shield plug from the outer tee using the charge machine. The ball-lock assembly has an elastomer O-ring seal that seals the reactor gas. This seal is backed up by a double O-ring seal in the blind flange. Two connections are provided for leak checking the seals. One line connects to the area between the ball-lock assembly seal and the first double O-ring. The other line connects to the area between the double O-rings. These leak detection lines connect to the reactor leak-off system. The line connecting to the area between the double O-rings has a valve that is normally closed and a pressure indicator upstream of the valve. The line connecting to the region between the blind flange and the breech closure contains a tee connection. The branch of the tee contains a valve that is normally closed. This valve connects to a vacuum system. The run of the tee on the downstream side contains a valve that is normally open and connects to the leak-off system. A pressure indicator is connected to the line just above the valve. The ball-lock assembly or blind flange seals are checked by applying pressure to one or the other seal areas and watching for a pressure rise to indicate the presence of a leak. If a reactor gas leak to the region between the ball-lock assembly and the blind flange occurs, the reactor can be shut down and the leak fixed. However, reactor and loop operation can continue for some time after the leak starts by closing the two valves in the leak-detection line.

Nozzle Cooling. The nozzle coolant inlet is connected above the bottom tee assembly and is routed out through the bottom pipe chase to the through-tube nozzle cooling system (see sec. 5.16). The coolant enters above the tee and flows up the outside of the through-tube between the tube and the nozzle extension and discharges into the reactor bottom plenum. The basic function of this coolant is to maintain the carbon steel nozzle and nozzle extension below 650°F and to minimize the thermal growth of the through-tube. Instrumentation is included in this system to protect the nozzle and nozzle extension if the nozzle cooling should fail (see sec. 5.16).

Nozzle Reactions. The pipe reactions of the primary and secondary containment pipes are transmitted to the reactor pressure vessel nozzle. These reactions result in a bending moment at the nozzle-to-vessel junction. The maximum combined moments from these reactions are less than the maximum allowable moments for the nozzle-to-vessel junction, as determined by Greenstreet.[2] The combined moments discussed in the design analysis (see sec. 4.2.5) are based on a through-tube thermal growth of 5.75 in. without spring hanger supports. These moments are greater than allowable. The through-tube growth is estimated to be less than 4.75 in. (see Design Analyses, Fig. A.1.1-3). The moments have been determined based on 4.75-in. growth with hanger supports. The moments will be reported in a forthcoming document. The moments based on a through-tube

[2]Memo from B. L. Greenstreet to W. S. Chmielewski, Feb. 1, 1961.

thermal growth of 4.75 in. are within the maximum allowable for the nozzle-to-vessel junction.[2]

Field Welding. The entire bottom nozzle tee assembly is welded to the reactor pressure vessel nozzle extension just above the point where the nozzle coolant enters the extension. This weld is made in the field after the reactor pressure vessel has been erected in place but before the biological concrete shield has been poured around the nozzles. This weld is coordinated with the field welding of the charge nozzles to the reactor vessel. The center charging nozzle is welded first; the bottom nozzle assemblies for the small loops are welded next; and then the additional charge nozzles and the bottom nozzle assemblies for the large loops are welded. The work progresses radially outward from the axis of the reactor pressure vessel. Before the biological concrete shield is poured, it is also necessary to make the field welds where the inner and outer tees join the primary loop piping and secondary containment piping, respectively.

4.2.3. Through-Tube

Through-Tube Cooling and Insulation. The through-tube is a seamless tube approximately 64 ft long with an adapter welded to each end for the purpose of welding the tube to the top and bottom nozzle inner tees. The through-tube has an orifice and guide ring that fits inside a guide sleeve located in the bottom grid support structure of the reactor core. This orifice is installed and replaced with the through-tube. The purpose of this orifice is to regulate the reactor gas flow up the outside of the through-tube. The function of this reactor gas flow is to remove the gamma and neutron heat generated in the tube and in the graphite surrounding the tube. The flow must be adequate to maintain the through-tube wall temperature below 1075°F.

Since the through-tube temperature is a function of the geometry of the experimental fuel assembly, each experimenter must examine his experiment to determine the radial and axial temperature profile of the fuel assembly and the axial temperature profile of the tube. Several fuel assembly geometries and conditions that would appear to give the worst through-tube temperature and reactor gas flow requirement conditions have been examined. The fuel geometries reported by Korsmeyer[3] were selected as typical. The reactor gas temperature (tube coolant temperature) vs distance from the bottom of the core is shown in Fig. 4.2.5 for a 1500-kw unattemperated fuel assembly[4] and in Fig. 4.2.6 for a 1500-kw attemperated assembly.[5] In each case, four different reactor gas mass flow rates up

---

[3]R. B. Korsmeyer, W. R. Huntley, and N. Ozisik, Comparison of Fuel Assembly Tests Prognosticated for the EGCR Loops, ORNL CF 60-1-1, Jan. 4, 1960.

[4]L. W. Noggle, Steady State Radial and Axial Temperature Profile of an EGCR 5 1/2 in. o.d. Thru-Tube for 1500 kw Operation, ORNL CF 60-11-55.

[5]L. W. Noggle, Steady State Radial and Axial Temperature Profile of an EGCR 5 1/2 in. o.d. Through-Tube During 1500 kw Operation, ORNL CF 60-12-67.

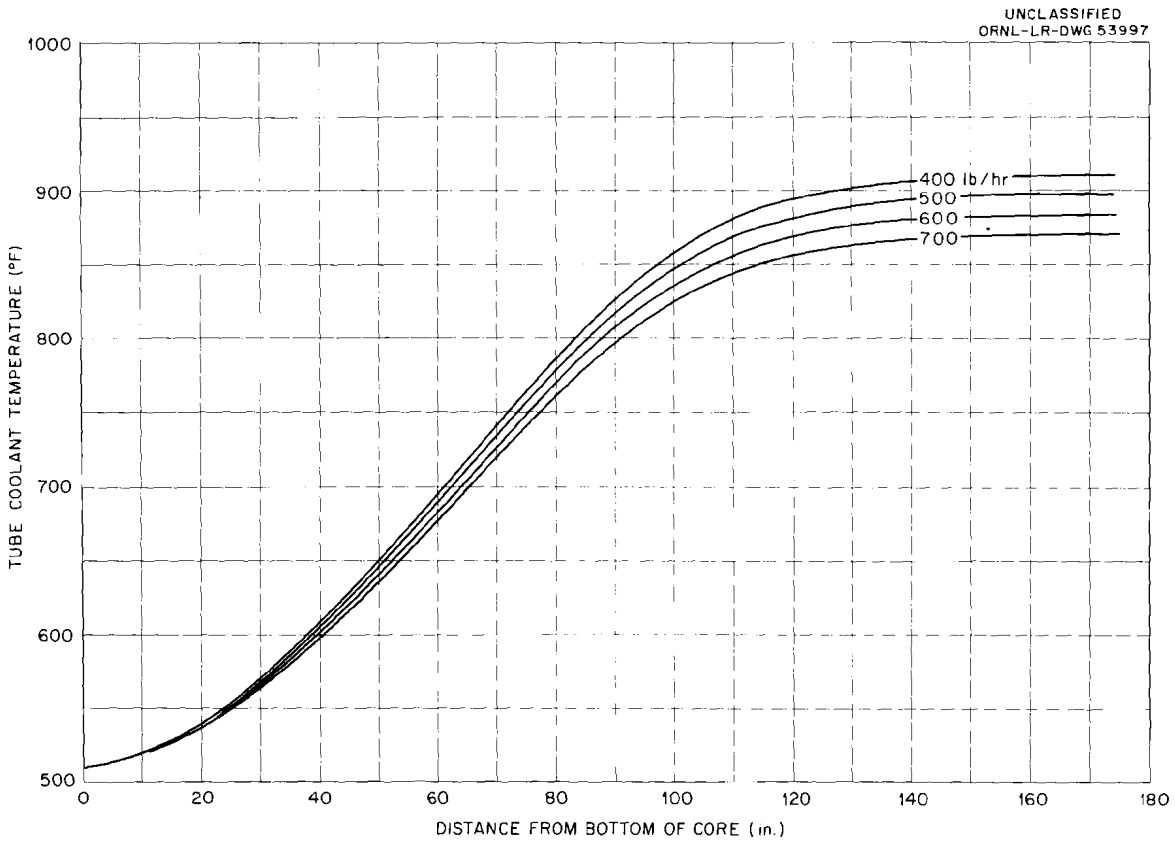

Fig. 4.2.5. Coolant Temperature Rise for Case of the Central Control Rod Fully Inserted and Bank Insertion to 62 in. ($\Delta k = 0.025$).

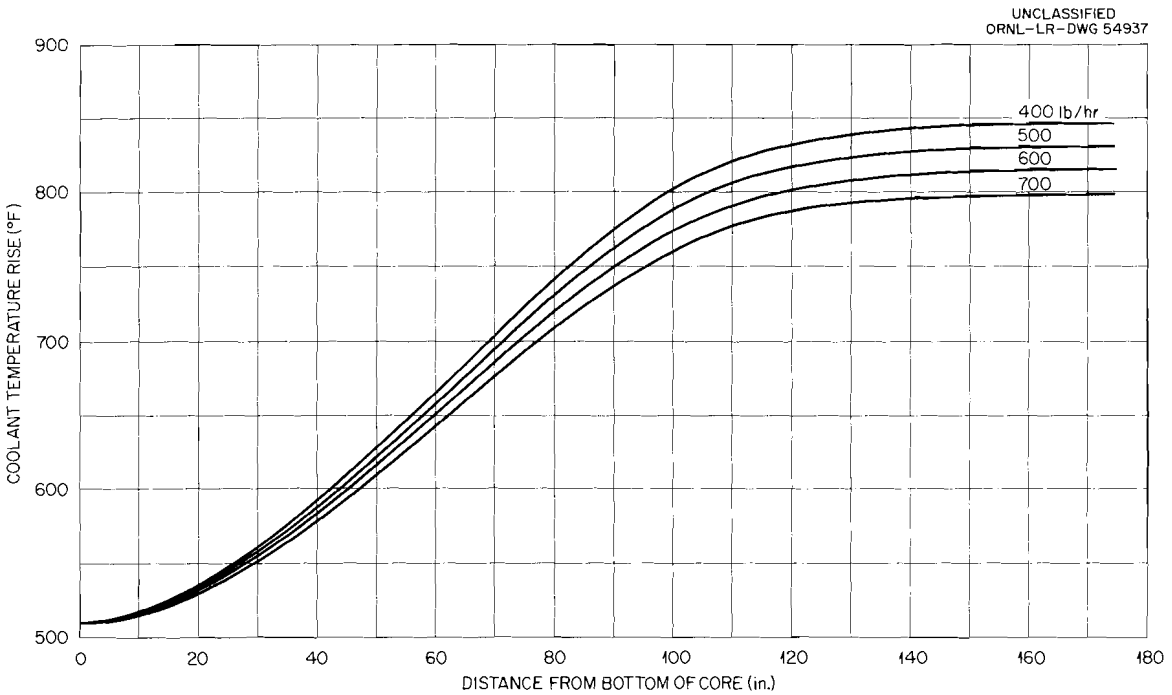

Fig. 4.2.6. Coolant Temperature Rise for Case of the Central Control Rod Fully Inserted and Bank Insertion to 62 in. ($\Delta k = 0.025$).

the outside of the through-tube are shown. The through-tube outside surface temperatures vs distance from the bottom of the core are shown in Fig. 4.2.7 for a 1500-kw unattemperated fuel assembly[4] and in Fig. 4.2.8 for a 1500-kw attemperated fuel assembly.[5] In each case the same four reactor gas mass flow rates up the outside of the through-tube are indicated.

Unattemperated fuel assemblies operating at 335 kw were also studied in detail because they appear to give the maximum tube surface temperature and the maximum temperature drop condition across the tube. The tube outside surface temperature vs axial distance from the bottom of the core and the temperature drop across the tube are shown in Figs. 4.2.9 and 4.2.10, respectively.

The through-tube is insulated on the inside from the hot loop gas by using reflective insulation (see sec. 4.13). The insulation in the bottom nozzle and the reactor bottom plenum is installed when the through-tube is installed. The insulation in the top nozzle inner tee and the reactor pressure vessel top nozzle and nozzle extension is installed as an integral part of the experimental stringer (see sec. 4.3) when the stringer is installed.

Design Temperatures and Pressures. The through-tubes for the single through-tube loops (TS-2, TS-3, and TL-1) are designed for an internal pressure of 1100 psia at 1075°F. The inner through-tube for the double through-tube loop (TL-4) is designed for 350 psia at 1075°F.

Stress Analysis. A design analysis has been completed for a 5 1/2-in.-o.d. through-tube for loops TS-2 and TS-3. This tube is 5.5 in. o.d., with a 0.218-in. wall. The pressure differential across the through-tube is normally not over 800 psi (1100 psia maximum loop pressure and 300 psia reactor operating pressure). The stress created by a loss of pressure has been considered in the Design Analyses (see sec. 4.2.5) for both a reactor gas and a loop gas depressurization (see Appendix A.1.3-2 of the Design Analyses). During a loss of loop pressure, the through-tube will experience a 300-psig external pressure (reactor gas pressure). To meet Section VIII of the ASME Code, the calculated external pressure for a 5 1/2-in.-o.d. tube with a 0.218-in. wall is 300 psig at 1075°F (see Design Analyses Appendix A.1.3-2). Greenstreet reported[6] an instantaneous external collapsing pressure of 900 psia for a 4-in.-o.d. type 347 stainless steel tube with a temperature of 1200°F at one end, 1170°F at the center, and 1130°F at the other end. The mean radius-to-thickness ratio and the ovality ratio of the tube were 15.43 and 0.9982, respectively. A similar type 347 stainless steel tube collapsed under an external pressure of 990 psia with a temperature of 1200°F at one end and 920°F at the other end. As the mean radius-to-thickness ratio decreases, the allowable external pressure increases. The mean radius-to-thickness ratio of the 5 1/2-in.-o.d. through-tube is 12.115, with an ovality of 0.9941. The maximum end temperatures

---

[6]Engineering Test Status Report for EGCR for Period December 15, 1960 to January 15, 1961, p. 12.

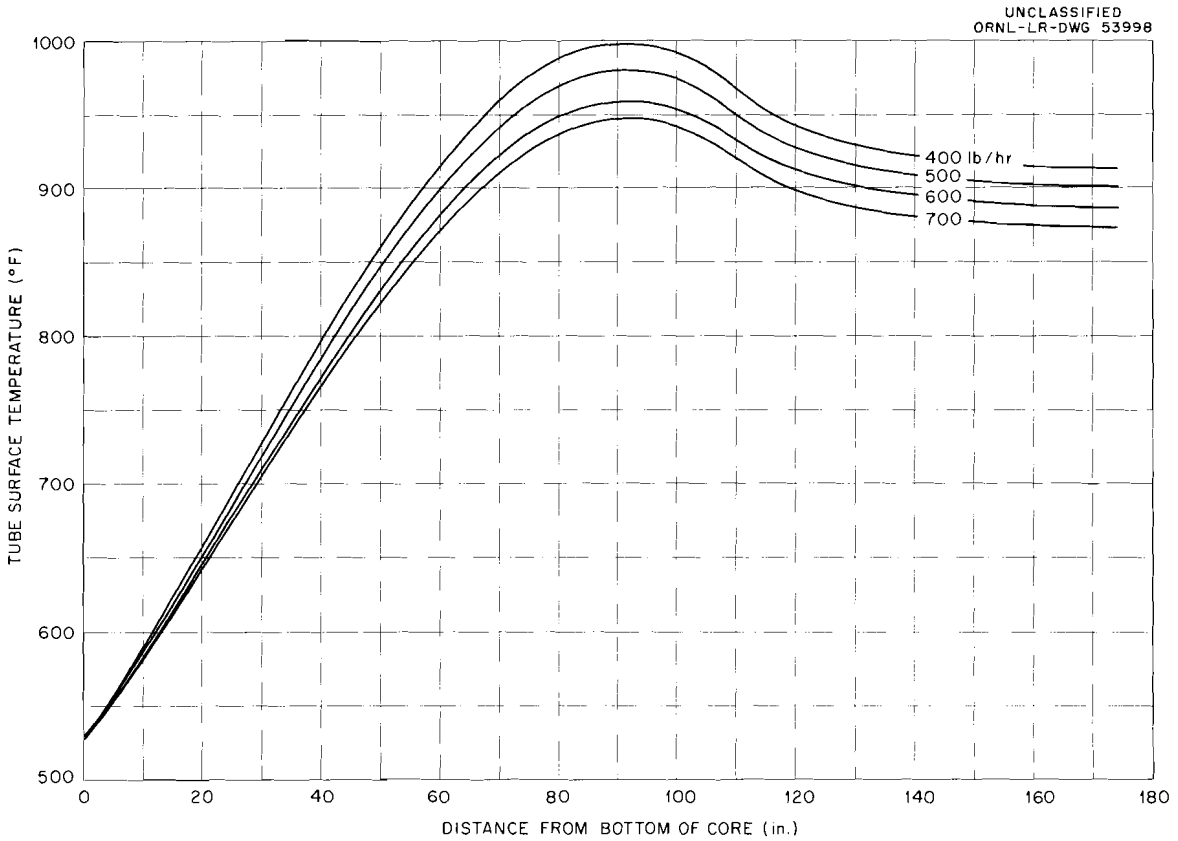

Fig. 4.2.7. Axial Tube Temperature Profile for Case of the Central Control Rod Fully Inserted and Bank Insertion to 62 in. ($\Delta k = 0.025$).

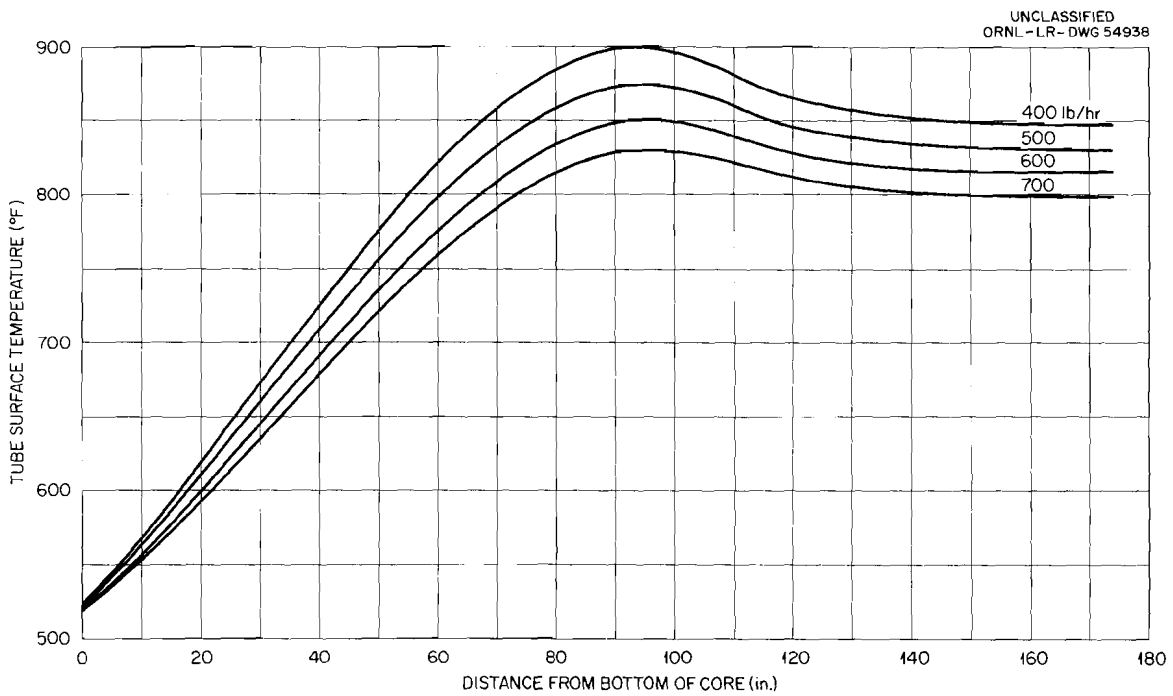

Fig. 4.2.8. Axial Tube Temperature Profile for the Central Control Rod Fully Inserted and Bank Insertion to 62 in. ($\Delta k = 0.025$).

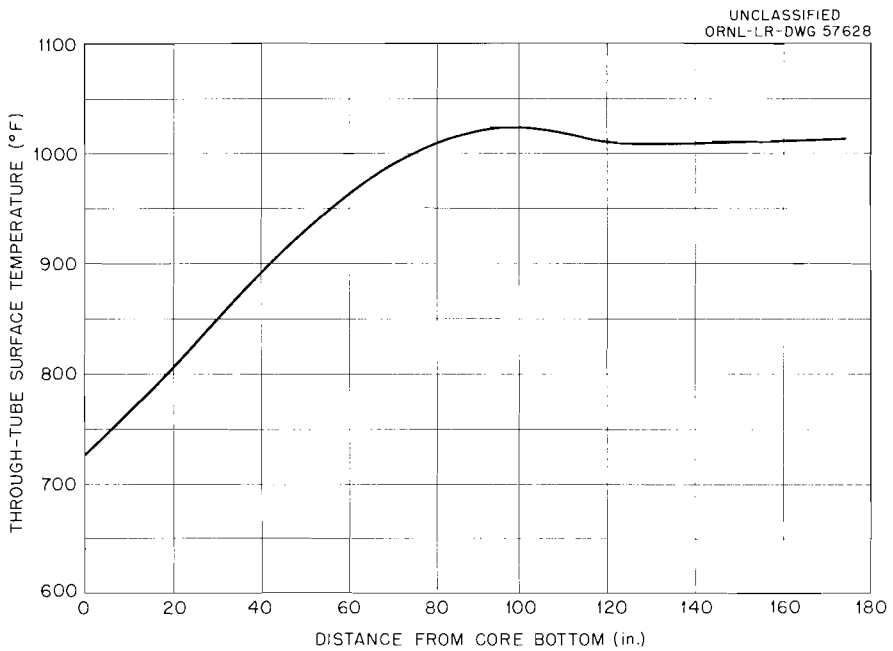

Fig. 4.2.9. Surface Temperature of Through-Tube vs Axial Distance of Through-Tube from Bottom of Reactor Core.

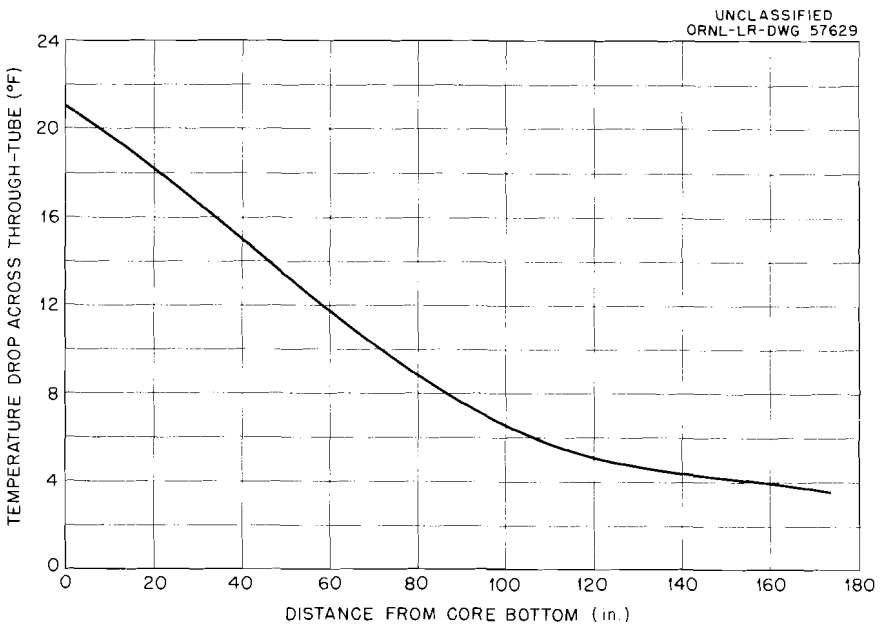

Fig. 4.2.10. Temperature Drop Across Through-Tube vs Axial Distance of Through-Tube from Bottom of Reactor Core.

are 950 and 1075°F. Comparing the proposed through-tube with the tested tube, the through-tube design appears to be adequate, with a factor of safety of 3 to 4.

A preliminary design analysis of a through-tube for loop TL-1 has been completed. A 9 1/2-in.-o.d. through-tube with a 0.500-in. wall appears to be adequate to meet the internal pressure conditions of 1100 psia and the 300-psig external pressure.

Provisions for Thermal Growth. Space for through-tube thermal growth of 5 3/4 in. has been designed into the bottom nozzle outer tee. The maximum through-tube growth is expected to occur with a loop gas inlet temperature of 950°F and outlet temperature of 1050°F. This problem was examined in detail for the 5 1/2-in.-o.d. tube.

The over-all thermal growth depends on the conditions and geometry of the five regions shown in Fig. 4.2.11. For the bottom nozzle a wide range of results can be obtained by varying the tube insulation thickness or the nozzle coolant flow. The conditions shown for region I of Fig. 4.2.12 are based on 100-lb/hr nozzle coolant flow and 1/4 in. of reflective insulation inside the through-tube.

The temperature of the through-tube in the bottom plenum region is a function of the reactor gas film coefficient and the insulation inside the tube. The tube surface temperature, as shown on Fig. 4.2.12, is based on 1/4 in. of reflective insulation and the film coefficient calculated from BMI data.[7] The through-tube surface temperature profile through the core is based on a 950°F inlet loop temperature with an unattemperated fuel element operating at 335 kw and a reactor coolant flow up the outside of the tube of 450 lb/hr. The through-tube temperature profile for the top plenum is based on a loop temperature of 1050°F and a reactor plenum temperature of 1050°F.

For the top nozzle a wide range of results can be obtained by varying the insulation thickness or the nozzle coolant flow. The conditions shown on Fig. 4.2.12 are based on 1/2 in. of insulation inside the through-tube and 75-lb/hr nozzle coolant flow. This condition was selected to match the nozzle annulus coolant temperature of 461°F and thereby prevent inducing thermal stresses in the nozzle at this position.

The temperature of the through-tube, and thereby its growth, is controlled by the temperature and flow rate of the interior nozzle cooling gas, the film coefficient between the tube wall and the bottom reactor plenum gas, the reactor gas flow rate up the outside of the tube, the loop gas inlet temperature, and the geometry of the experimental fuel assembly.

---

[7] L. J. Flanigan, G. R. Whitacre, and H. R. Hazard, Model Studies of Flow and Mixing in the Partially Enriched Gas Cooled Power Reactor, BMI-1397, Nov. 30, 1959.

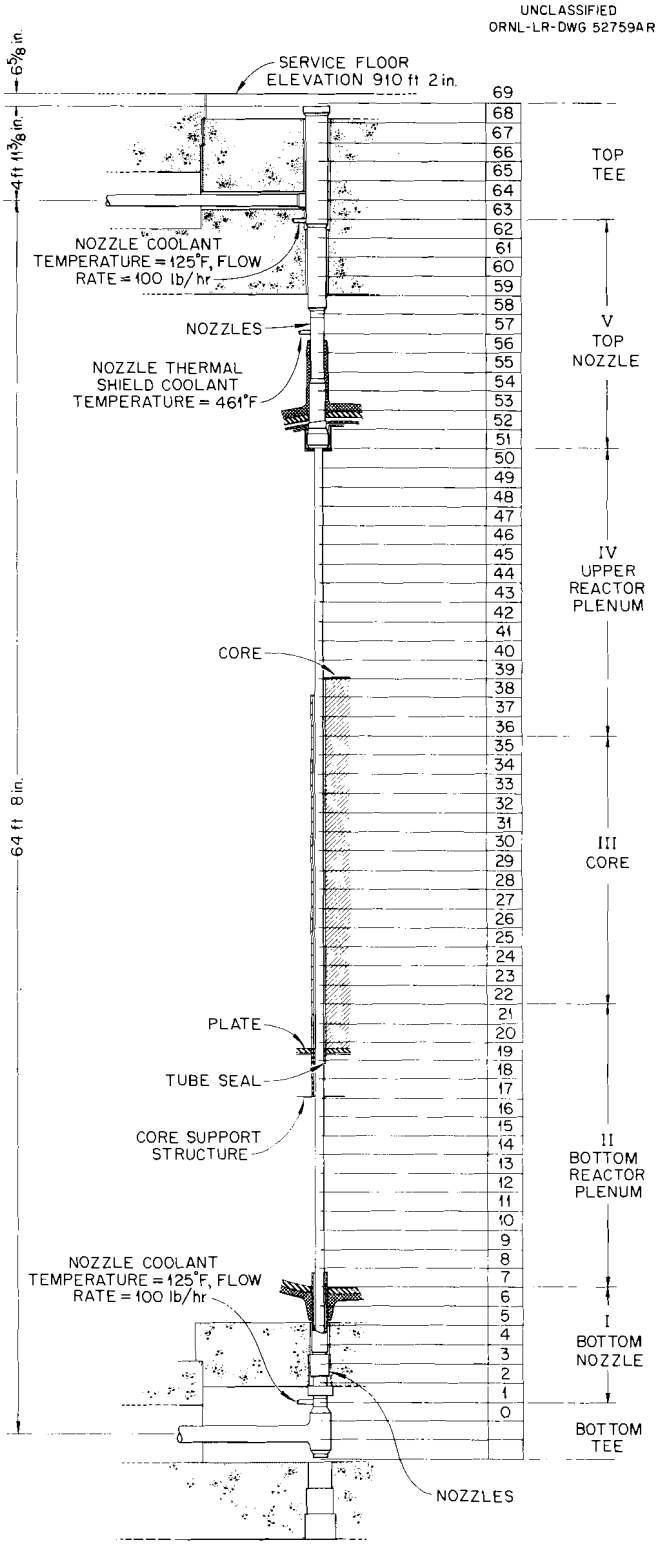

Fig. 4.2.11. Experimental Loop Through-Tube Assembly.

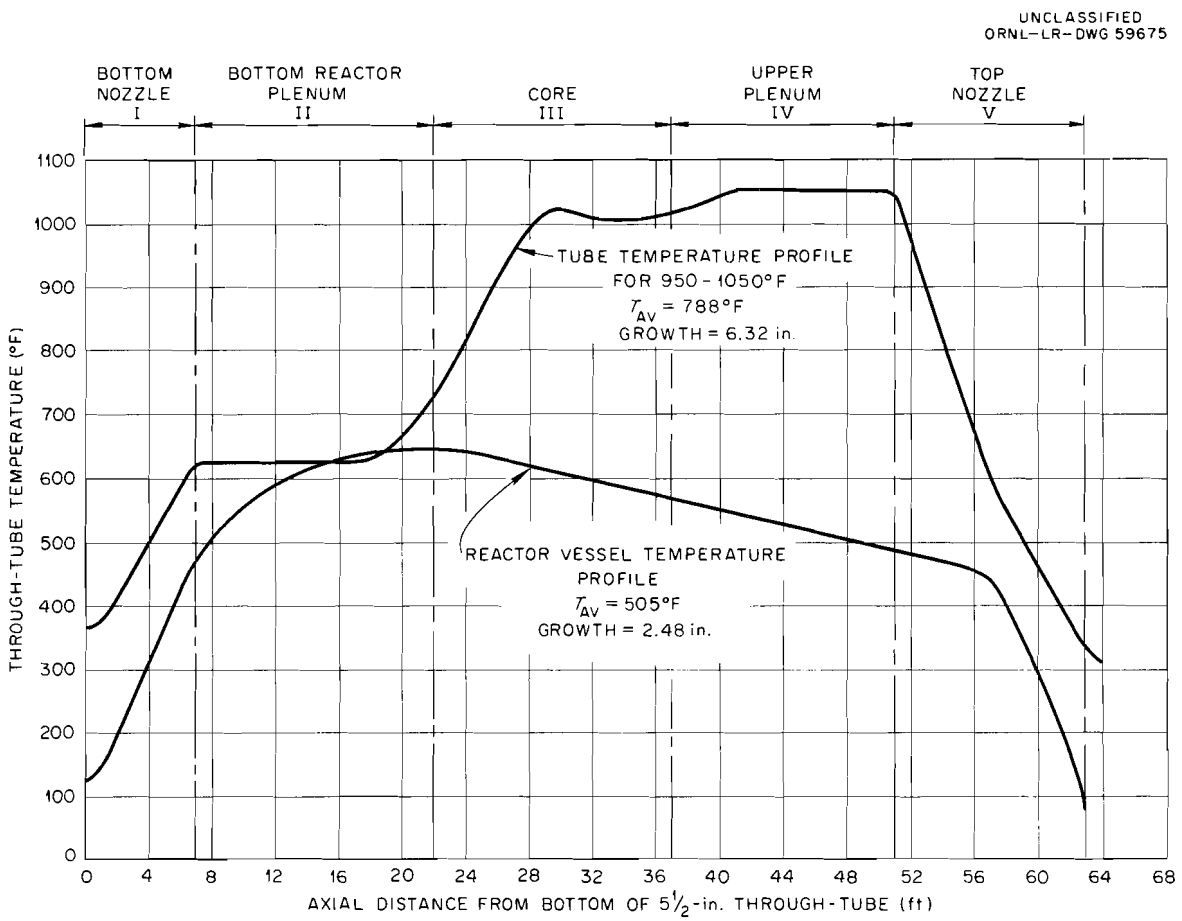

Fig. 4.2.12. Axial Temperature Profile for a 5 1/2-in. Through-Tube and the Reactor Pressure Vessel.

To control thermal growth of the through-tube, loop operation must be coordinated with reactor operation; that is, the difference between the average axial temperature of the reactor pressure vessel and the average axial temperature of the through-tube must not exceed 600°F. This problem does not appear during normal operation; however, it may occur during loop shakedown operation with a cold reactor. In addition, during reactor shutdown and cooling off the loop, the loop operator must permit the loop to cool down with the reactor, that is, not to try to maintain temperature with the loop heater.

The outer through-tube for the 9 1/2-in.-o.d. double tube has an expansion joint that provides for differential thermal expansion between this tube and the reactor pressure vessel. The design pressure for this tube is 350 psig internal or external pressure at a maximum temperature of 950°F. The design of this joint is within the present technology of bellows manufacturers; however, a cycle test of the bellows assembly will be made.

4.2.4. Top Nozzle Tees

A top nozzle tee section for the 5 1/2-in.-o.d. loops (TS-2 and TS-3) is shown in Fig. 4.2.13. A top nozzle tee section for the 9 1/2-in.-o.d. single through-tube loop (TS-1) is shown in Fig. 4.2.14 and the 9 1/2-in.-o.d. double through-tube loop (TL-4) in Fig. 4.2.15.

Design Temperatures and Pressures. The primary containment is designed for 1100 psia at 975°F. The secondary containment is designed for 750 psia at 650°F. The Bridgman closure is designed for 1100 psia at 650°F. Design provisions have been made to keep this closure below 350°F because of its elastomer O-ring. The top blind flange is designed for 750 psia at 650°F. The flange bolting is discussed in the design analysis (see sec. 4.2.5). This bolting has been designed to hold the maximum transient pressure resulting from a primary containment loop failure (see Design Analyses Appendix A.3.3.5-10). More bolts have been added than are required to meet the transient. The extra bolts are intended to prevent the flange seals from "burping" at the instant of the pressure release.

Bridgman Closure. The top Bridgman closure provides access to the through-tube for insertion or removal of an experimental fuel assembly. The Bridgman closure also provides a means for attaching and handling the top nozzle shield plug and the rest of the experimental stringer (see sec. 4.3). All instrumentation inside the through-tube must pass through the Bridgman closure electrical connector. This connector is designed for 1100 pisa at 350°F. The electrical connector that penetrates the secondary containment is designed for 750 psia at 350°F. A flexible coupling connector is provided to electrically connect the Bridgman closure connector to the secondary containment connector. This flexible coupling connector must be removed by hand before the instrumented fuel stringer can be removed by the service machine.

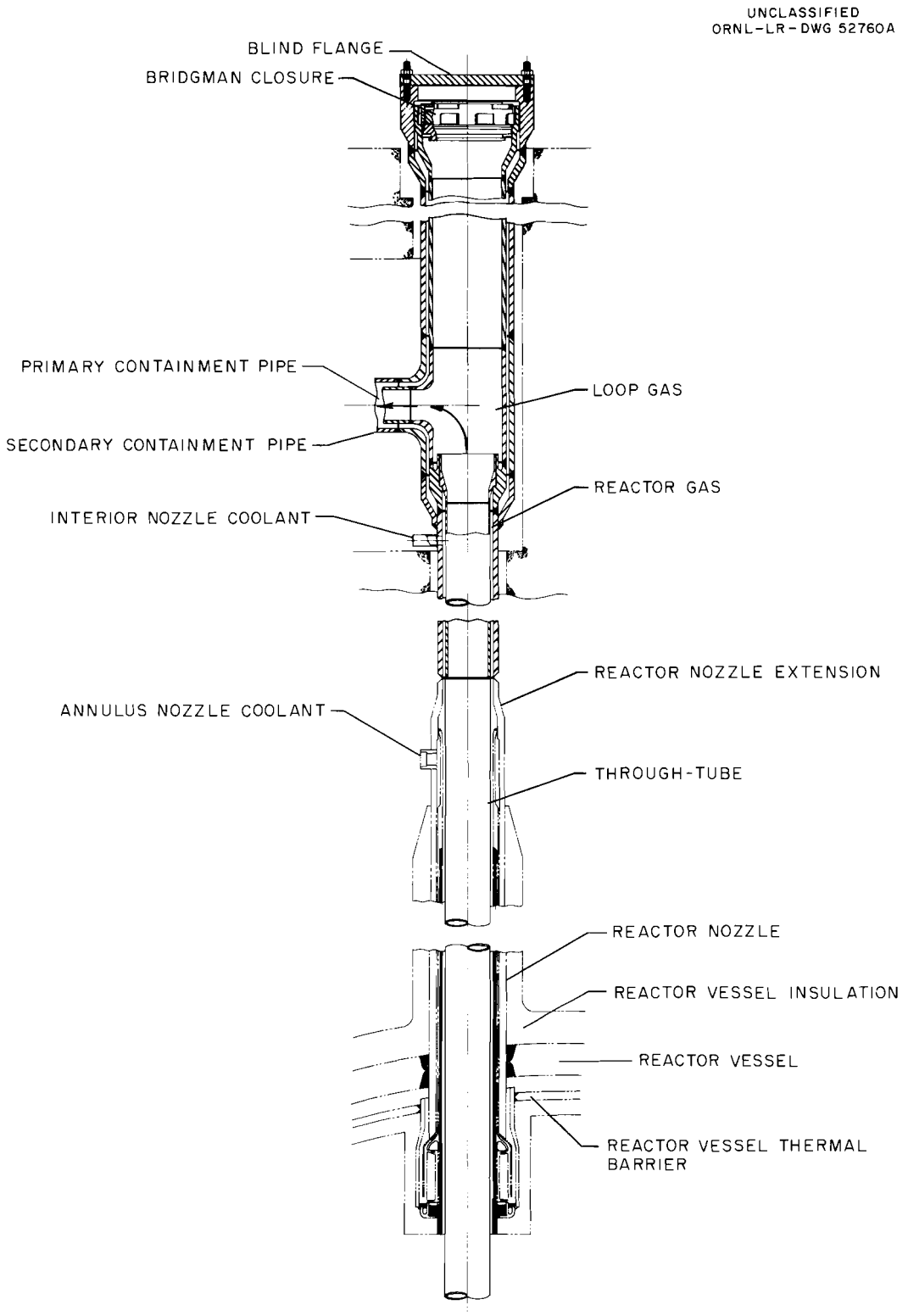

Fig. 4.2.13. Top Nozzle Tee Section for 5 1/2-in.-o.d. Through-Tube.

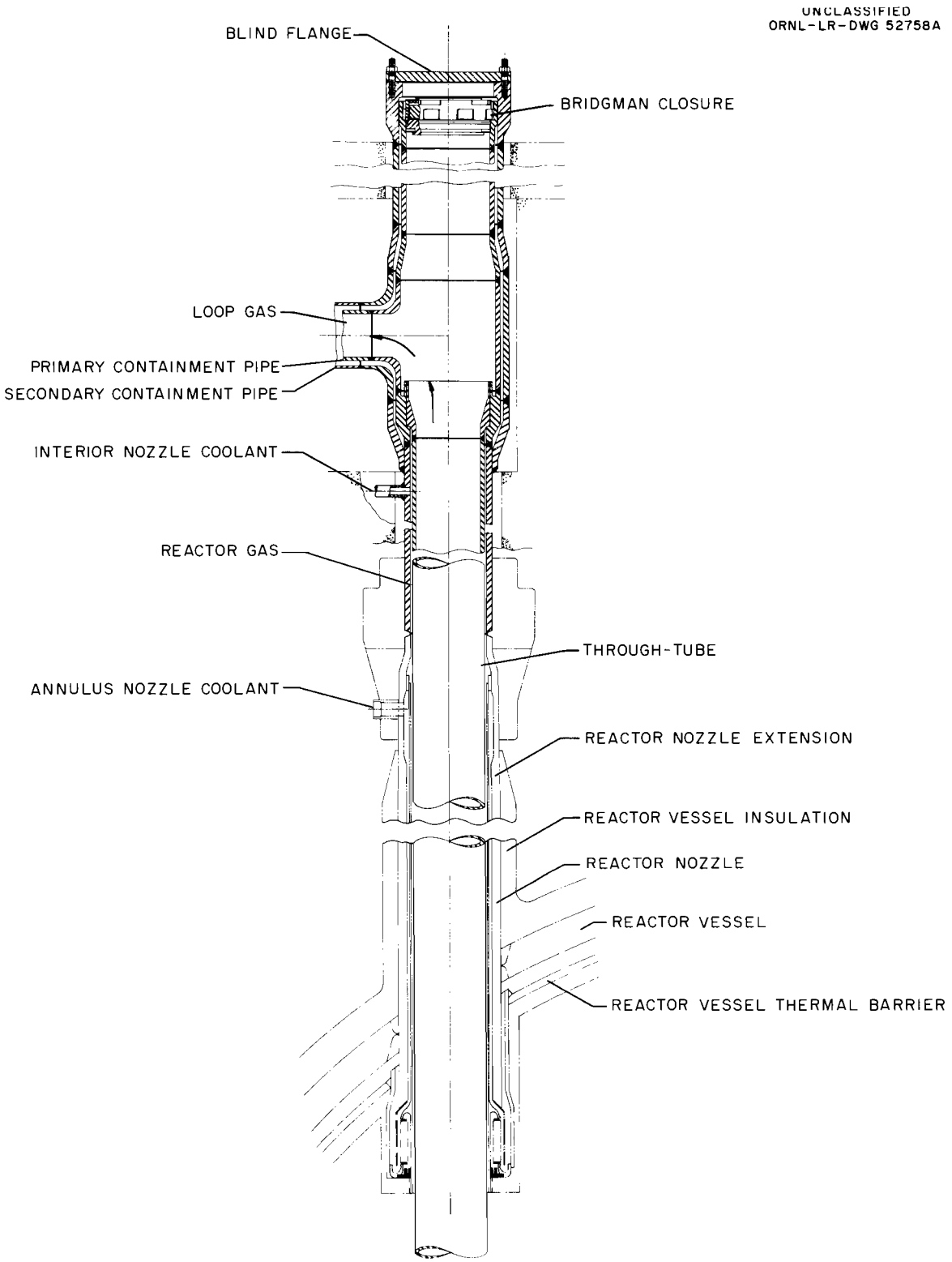

Fig. 4.2.14. Top Nozzle Tee Section for 9 1/2-in.-o.d. Single Through-Tube.

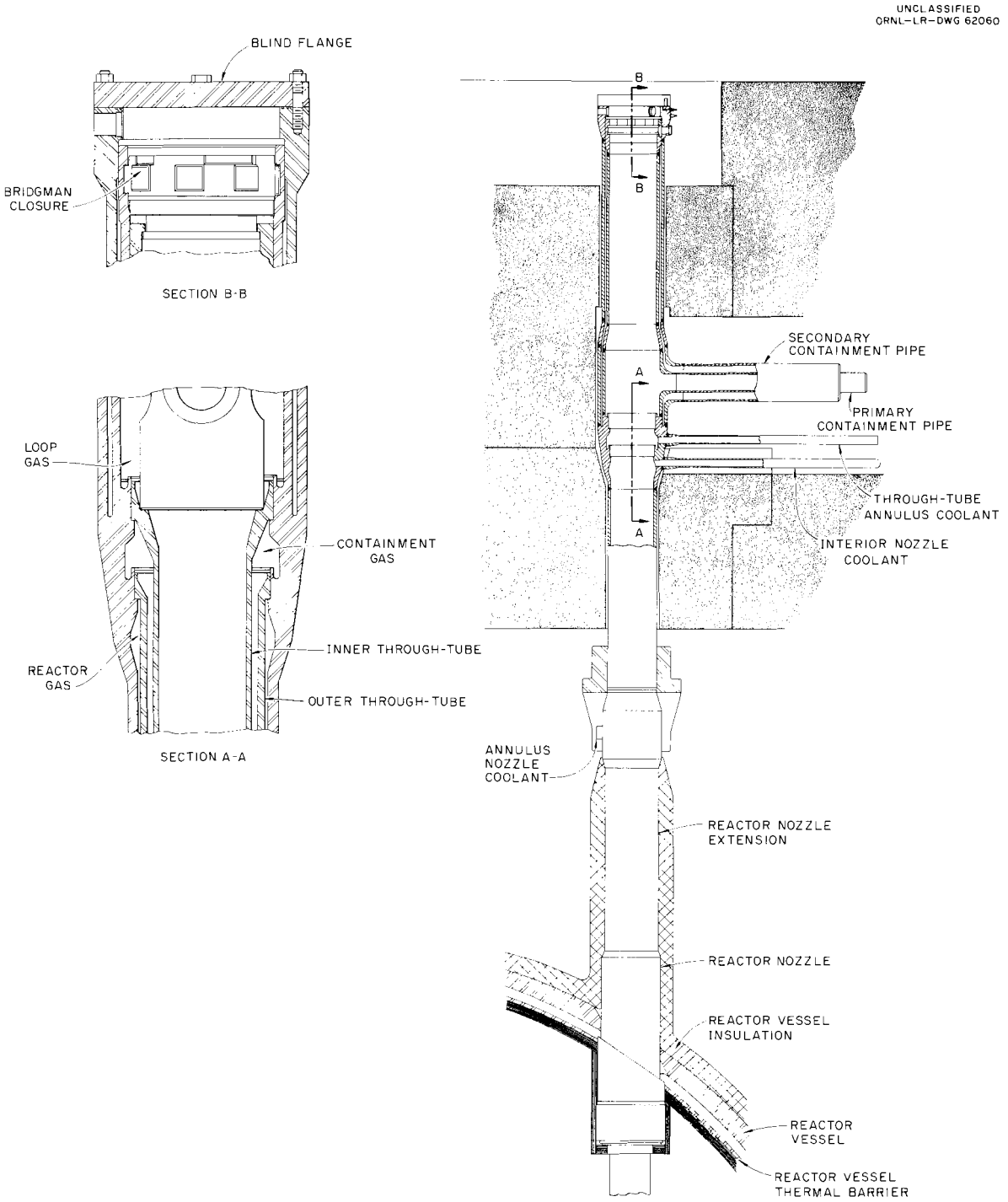

Fig. 4.2.15. Top Nozzle Tee Section for 9 1/2-in.-o.d. Double Through-Tube.

Bridgman Closure and Blind Flange Leak Detection. Access to the through-tube nozzle is obtained by removing the top blind flange by hand and then removing the top Bridgman closure using the service machine. The Bridgman closure has an elastomer crush-type O-ring seal. This seal is backed by a double O-ring seal in the blind flange. A leak detection system similar to the one discussed for the bottom nozzle is provided.

Nozzle Cooling. The nozzle coolant inlet is located just below the outer tee. It is routed under the loop piping to the cooler chase and connects to the through-tube nozzle cooling system. The hazards to the top nozzle resulting from a loss of this cooling system are described in Section 5.16.

The concrete that surrounds the top nozzle and nozzle extension must be maintained at 120°F. The heat flow path is from the through-tube to the nozzle or nozzle extension and to the surrounding concrete. Since the nozzle cooling gas is at 125°F inlet and the loop gas is at 1050°F, the nozzle gas becomes the heat sink for the heat lost from the through-tube.

A separate line has been added to connect with the annulus between the inner and outer through-tubes of the 9 1/2-in.-o.d. double-tube nozzle. When using a double through-tube, this line can provide for coolant to flow between the two tubes and thus reduce the differential thermal growth between the inner tube and outer tube and the reactor pressure vessel. Also, circulation of gas between the through-tubes may be required to detect inner through-tube leaks.

Nozzle Reactions. The pipe reactions of the primary and secondary containment pipe are transmitted to the reactor pressure vessel nozzle. The resulting maximum combined moments are below the maximum allowable moments as determined for the reactor nozzle by Greenstreet[8] (see Design Analyses Appendix E.1.0). The maximum stress condition occurs when the reactor is hot and the loop is cold. The bending moment is less by a factor of approximately 20 when the reactor and loop are both hot. All stresses in each nozzle component are well within the allowable stress criteria (see sec. 6.2 and Design Analyses Appendix A.2.0, B.2.0, and C.2.0).

Field Welding. The entire top nozzle assembly is field-welded to the reactor pressure vessel nozzle. This weld is made after the reactor pressure vessel is erected in place and before the biological concrete shield is poured around the nozzle. Each weld is coordinated with the field welding of the control rod nozzles and the surveillance nozzles, all of which extend to the service machine floor. The nozzle welding starts at the center of the reactor. The center control rod nozzle is welded to the reactor vessel first, followed by the welding of the nozzles

---

[8]Memo from B. L. Greenstreet to W. S. Chmielewski, Feb. 1, 1961.

for the small through-tubes (TS-2 and TS-3). Working radially outward, the field welds are made for the control rod nozzles, the surveillance nozzles, and the nozzles for the large loops (TL-1 and TL-4). Each weld is x-rayed and tested as the work progresses radially outward. Access to an individual nozzle field weld after the adjacent nozzles are welded is extremely limited.

A short length of primary and secondary containment piping is first welded to the tees at the fabricators' shop. After erection this pipe will extend beyond the congested area around the nozzles and thus permit access to the loop piping for field welding.

4.2.5. Project References

Design Criteria (CF 61-6-3)	
Criteria for Two 5 1/2-in.o.d. Through-Tube Assemblies (Loops TS-2 and -3); Two 9 1/2-in.-o.d. Through-Tube Assemblies (Loops TL-1 and -4)	Code A.1.0 A.2.0 AA.2.0
Design Analyses (CF 61-6-4)	
The 5 1/2- and 9 1/2-in.-o.d. Through-Tube Assembly Title II	
Shielding Aspects of Penetrations in Bottom Shield of EGCR	
Preliminary Design Drawings (CF 61-6-2)	
Through-Tube and Storage Nozzle Breech Closure	E-RD-10405
5 1/2-in.-o.d. Through Tube (TS-2 and TS-3)	
Assembly	F-RD-10291
Bottom Nozzle Tee Section Assembly	F-RD-10128
Weldment-Insulation Can, Bottom Nozzles Tee Section	E-RD-10243
Top Nozzle Tee Section Assembly	F-RD-10127
Temporary Top Shield Plug Assembly and Details	E-RD-10424
9 1/2-in.-o.d. Through-Tube (TL-1)	
Assembly	F-RD-10289
Bottom Nozzle Tee Section Assembly	F-RD-10130
Top Nozzle Tee Section Assembly	F-RD-10129

9 1/2-in.o.d. Through-Tube (TL-4)	
Assembly	F-RD-10286
Bottom Nozzle Tee Section Assembly	F-RD-10250
Top Nozzle Tee Section Assembly	F-RD-10208
Specifications (CF 61-6-5)	
Experiment Loop Through-Tube Top Nozzle Closures for EGCR Experimental Loops	JS-128-117
Bottom Closures, Shield Plugs, and Adapter	JS-128-148
Through-Tube Welding and Machining Equipment	JS-128-136
Top Nozzle Tee Section Electrical Feed Through Connector	JS-128-150
Welding Specifications	
Type 347 Stainless Steel to Type 347 Stainless Steel	MET-RWS-1
Type 347 Stainless Steel to Carbon Steel	MET-RWS-4
Carbon Steel to Carbon Steel	MET-RWS-2
Inconel to Type 347 Stainless Steel	MET-RWS-4
Type 347H Stainless Steel Specifications	
Seamless Pipe	MET-RM-A376-Mod 2-TP 347H
Seamless Tubing	MET-RM-A213-Mod 2-TP 347H
Welded Pipe	MET-RM-A358-Mod 2-TP 347H
Plate	MET-RM-A240-Mod 2-TP 347H
Forgings	MET-RM-A182-Mod 2-TP 347H
Welding Fittings (caps, elbows, pipe tees, reducers)	MET-RM-A403-Mod 2-TP 347H
Carbon Steel Specifications	
Seamless Pipe	MET-RM-A106-Mod 1 Gr C Carbon Steel
Seamless Tubing	MET-RM-A106-Mod 1 Gr C Carbon Steel

4.3. Experimental Stringer

The experimental stringer (instrumented experimental assembly) consists of a top Bridgman closure, a shield plug, support structure for an instrumented fuel assembly, an instrumented fuel assembly, insulation, and the instrumentation necessary to obtain useful data.

4.3.1. Bridgman Closure

Access to the through-tube for insertion or removal of experimental assemblies (instrumented and uninstrumented) is by means of a breech closure which seals off the upper end of the top nozzle inner tee. This closure is a modified EGCR reactor nozzle breech closure assembly (AC Dwg. 5927-EGCR-MS-219) in which the outer spline ring is shorter, the electrical connector in the breech body is modified (see sec. 4.3.5), the closure is provided with an elastomer peripheral O-ring rather than a metal O-ring (metal O-ring seal may not meet the leaktightness requirements), ASME Code Committee approved materials are substituted for AISI 4140, and the closure is designed for 1100 psia and full vacuum instead of 350 psia.

The shield plug is connected to the Brigman closure by means of a bolted split ring. Sufficient space is left between the closure and the shield plug to permit installation of a pressure transmitter and two differential-pressure transmitters. This eliminates the need for penetrating the Bridgman closure with pneumatic tubing. Only electrical leads penetrate the closure.

The Bridgman closure supports the full weight of the shield plug, instrumented fuel assembly, and support structure only during the lifting and lowering operations (see sec. 8.1). With the closure in position, the weight of the instrumented fuel assembly and support structure is supported by the top nozzle. Any differential thermal expansion between the top nozzle inner tee and the shield plug is taken up at the split ring. This motion will be taken into account in mounting the pressure and differential pressure transmitters and in routing thermocouple leads.

Two position limit switch assemblies are provided for each top Bridgman closure. These switches are used to indicate rotational alignment of the closure before the sealing operation is performed.

4.3.2. Shield Plug

In order to maintain the integrity of the reactor biological shield, it is necessary to insert a shield plug into the top nozzle inner tee. This shield plug prevents streaming of neutrons and gamma rays through the biological shield by way of the nozzles. With the reactor in

operation, access to the service machine room will be permitted only while all shield plugs are in place. Even with the reactor shut down, access to the service machine room will not generally be permitted unless all shield plugs are in place. If a shield plug is removed from a nozzle and the service machine is attached to that nozzle, access will be permitted if the reactor is shut down. During through-tube removal, access to a limited area of the service machine room will be permitted even though the shield plug is removed and the service machine is not attached to that nozzle.

Unlike the dummy shield plug (see sec. 4.14), the shield plug included in the experimental stringer is severely limited in length. It must not extend below the branch of the top nozzle inner tee, since this would obstruct loop gas flow. This requirement results in a shield plug of approximately half the length of a standard EGCR shield plug.

Experimental data will be taken on the dummy shield plug before the final design of the experimental stringer shield plug is completed. The stringer shield plug material has not been established. Since the operating temperature of the top Bridgman closure must be less than 350°F, every effort will be made in the final design of the shield plug to limit heat transfer along the plug length. Heat conduction along the plug length will be reduced by a series of deep rectangular grooves cut around the circumference of the plug, and convection will be minimized by the small clearance between the plug and the top nozzle inner tee. The only shield plug cooling will be an air flow of 400 lb/hr outside of the top nozzle outer tee. This will not contribute greatly to cooling the shield plug, since the heat must be transferred through both the inner and outer tees plus numerous gas films.

All instrument leads and tubes penetrating the shield plug (see sec. 4.3.5) will be spiraled to minimize neutron and gamma streaming. In routing instrument leads and tubes, allowance will be made for differential thermal expansion between the shield plug and the leads and tubes.

4.3.3. Instrumented Fuel Assembly

Is is planned to test a wide variety of fuel assemblies within the EGCR loops. The requirements as to means of support, use of attemperation, etc., are highly dependent on the nature of the fuel assembly to be tested. Therefore, it is possible only to describe in general terms that portion of the stringer assembly containing the fuel assembly.

The service machine height limits the length of experimental stringer that can be handled. As a result, only 10.2 ft of the active core length of 14.5 ft can be reached by the experimental stringer to test fuel assemblies. The lower 4.3 ft of active core may be filled with an uninstrumented assembly, but it must be installed and removed from above as a separate unit (see sec. 5.12).

The maximum permissible loop gas inlet temperature to the reactor through-tube is 950°F, and the maximum permissible outlet temperature is 1050°F. Where higher instrumented experimental assembly inlet gas temperatures are desired, an uninstrumented experimental assembly will be placed in the through-tube below the experimental stringer. The uninstrumented assembly will serve as a preheater. Where higher experimental outlet temperatures are required, attemperation of the inlet gas will be used.

4.3.4. Instrumented Fuel Assembly Support Structure

The nature of the support structure extending between the shield plug and the instrumented fuel assembly will depend on the experiment being run. The support may take many forms, such as a tube or a series of rods. For an attemperated instrumented fuel assembly, a tubular section (attemperator sleeve) will extend at least from the bottom of the fuel portion of the assembly to a point 5 pipe diameters above a venturi (see sec. 4.3.5). The extension above the venturi is required to maintain the accuracy of the venturi. For an attemperated experiment, mixing of the attemperator stream and the test section stream may take place at any point above this tubular section but before entering the branch of the top nozzle inner tee. If mixing takes place near the branch of the tee, thermal expansion of the through-tube will be lessened, since the flow of cooler attemperator gas will continue for a greater length of the through-tube. If mixing takes place shortly after leaving the venturi, thermal expansion of the through-tube will be greater but mixing will be more complete when entering the branch of the tee and the pressure drop of the attemperated portion of the loop will be considerably smaller.

Either a mixing chamber will be provided or the through-tube insulation thickness will be increased where the attemperator stream and the very hot test section stream come together. This will prevent overtemperature either in the through-tube or in the top nozzle inner tee.

If the support structure takes the form of a tube extending up to the vicinity of the shield plug, provisions will be made for gas flow out of the tube and into the branch of the tee with a minimum of pressure drop. One of three methods may be used. First, the tube may be replaced with a series of rods for support in the area directly beneath the shield plug. Since the gas stream would be directed against the shield plug, the end of the shield plug would be curved to direct flow toward the branch of the tee. If such a method is used, means will be provided for always aligning the curvature of the shield plug with the branch of the tee. Second, the tube could be replaced with a series of rods for support in the area directly beneath the shield plug, as above, but the end of the shield plug would not be curved to direct flow and no alignment of the shield plug would be required; however, the pressure drop would be higher. Third, the tube could be extended to the shield plug and large openings

could be provided around the tube. This arrangement would be essentially the same as the second case, but there would be less flow area. No alignment of the shield plug would be required.

As discussed in Section 5.12, an annular space will be provided between the support tube and top nozzle inner tee to provide a gas flow path when first lifting the experimental assembly for removal. During the initial lifting, gas will flow up past the assembly, down through the annulus between the support tube and the inner tee, and out through the branch of the inner tee. After further lifting of the assembly, the shield plug will move high enough to provide a flow path through the run of the tee into the service machine. Before lifting, the shield plug fills the run of the tee.

4.3.5. Instrumentation Requirements

Flow Through the Experimental Assembly. In order to obtain heat transfer data on attemperated instrumented fuel assemblies, it is necessary to measure flow through the test section (total gas loop flow minus attemperator flow; see Fig. 4.3.1). For unattemperated instrumented fuel assemblies, the in-cell loop gas flow measurement is identical to flow through the test section and is therefore the only flow measurement required.

For attemperated instrumented fuel assemblies a venturi is placed downstream of (above) the test section. In order to compute the test section flow, the following measurements are taken: differential pressure across the venturi (upstream to throat) ΔP_{23}, venturi inlet pressure (test section outlet pressure) P_2, and venturi inlet temperature (test section outlet temperature) T_3.

The design of the venturi will vary with the type of experiment. No single venturi is correctly shaped for all gas temperature and flow conditions, even with a given gas. In order to minimize pressure loss through the venturi, it must be machined to provide an ideal cross section vs length for the given experimental conditions. It is more than just a simple conical nozzle, cylindrical throat, and conical diffuser.

A minimum of 5 pipe diameters (preferably 10 or more pipe diameters) of straight pipe will be provided upstream of the venturi to establish uniform turbulent flow into the venturi. A minimum of 5 pipe diameters of straight pipe will be provided downstream to establish the proper exit conditions.

Calibration of the venturi will require the use of a dummy stringer (see sec. 4.4). The dummy stringer will be an experimental stringer in which the fuel assembly has been replaced by a dummy assembly which duplicates the fuel assembly geometry and weight.

UNCLASSIFIED
ORNL-LR-DWG 59676

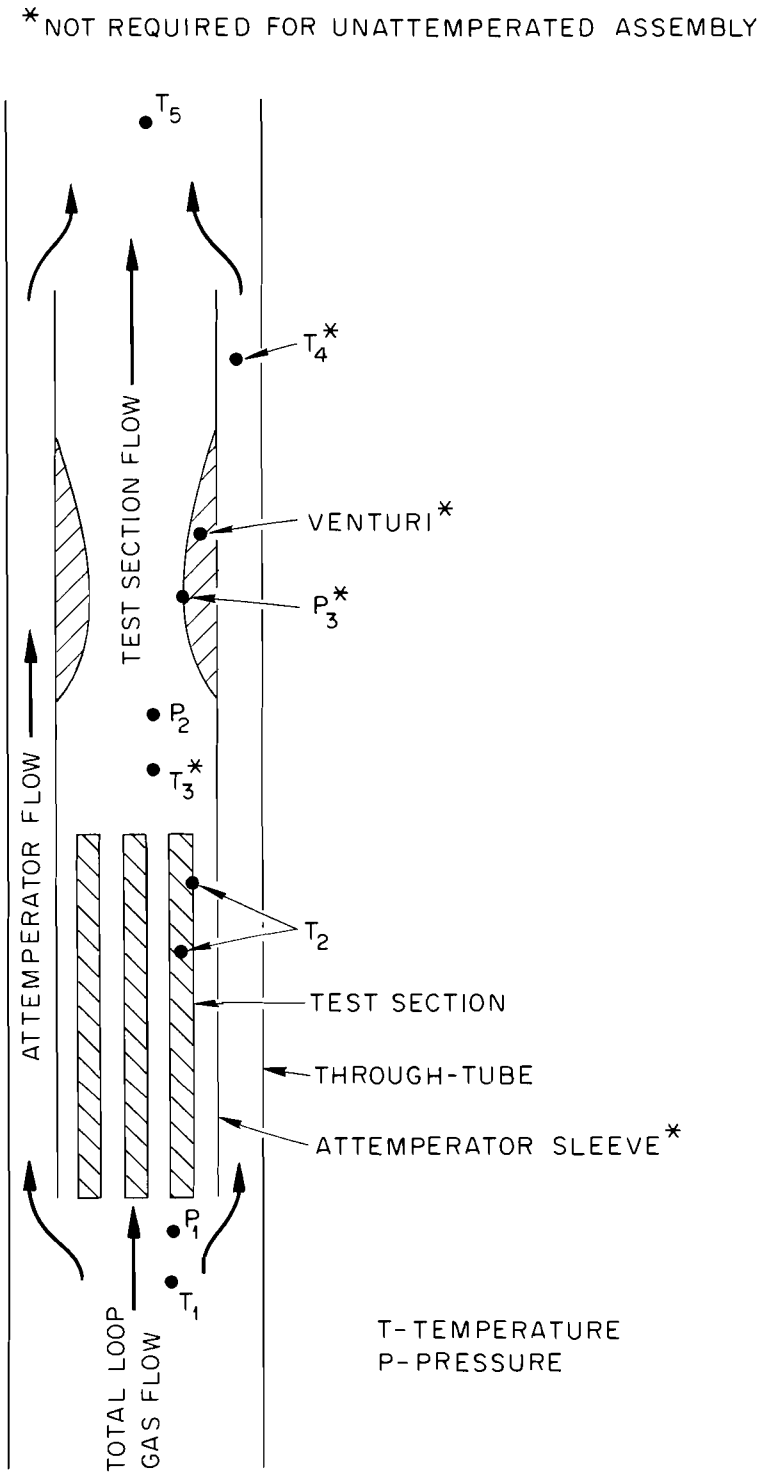

Fig. 4.3.1. Instrumentation Points for Instrumented Experimental Assembly.

The differential pressure and pressure transmitters for flow determination through the venturi will be located between the Bridgman closure and the shield plug. Pneumatic tubes will be run from the venturi along the fuel assembly support structure to the transmitters.

Pressure Drop Across the Experiment. In order to determine the flow vs pressure drop characteristics of a particular fuel assembly, it is necessary to measure the differential pressure across the experimental assembly, ΔP_{12}. A differential pressure transmitter is located between the Bridgman closure and the shield plug for this purpose. Pneumatic tubes run from the fuel assembly to the transmitter.

All pneumatic tubes are 1/8-in.-o.d., 0.020- to 0.028-in.-wall type 347 stainless steel. The tubes must be small enough to minimize routing problems and large enough to keep down delay in transmitting signals.

Temperature Measurements. Numerous thermocouples are required in order to obtain useful data from the experiment and to provide for safe operation of the loop. The temperature measurements required for an attemperated assembly are: T_1, test section inlet gas temperature; T_2, fuel element surface or center temperature; T_3, test section outlet gas temperature; T_4, attemperator stream outlet gas temperature; and T_5, outlet mixed mean gas temperature. Temperatures T_3 and T_4 are not required for an unattemperated fuel assembly. Three operating thermocouples plus two spares are required for the measurement of T_5, since this signal may be used to scram the reactor. The number of thermocouples measuring T_2 will depend upon the experiment being run and the capacity (number of pins) of the electrical connector penetrating the Bridgman closure.

Connectors. As mentioned in Section 4.3.1, all pressure and temperature signals from the experimental section penetrate the Bridgman closure through an electrical connector as electrical signals. No pneumatic signals pass through the closure. The Bridgman closure connector will also accommodate the electrical power leads for the pressure and differential pressure transmitters. The use of a 63-pin connector is presently being investigated. At the most, 15 pins are required for the three pressure and differential pressure transmitters (maximum of 5 leads per transmitter). The remaining 48 pins can be used for 24 temperature measurements (2 leads per measurement). The distribution of temperatures measured, including the number of points measured for an attemperated assembly, could be as follows: test section inlet gas temperature (1), fuel element surface or center temperature (16), test section outlet gas temperature (1), attemperator stream outlet gas temperature (1), and outlet bulk mean gas temperature (5). Two additional fuel element surface or center temperatures could be measured for an unattemperated assembly because it would not be necessary to measure T_3 and T_4.

The electrical signals and power leads for the transmitters must also pass through the top nozzle outer tee. It is planned to use four

20-pin connectors for this purpose, that is, four relatively small connectors rather than a smaller number of large connectors because of space limitations in the area. The connectors must be small enough to pass between the top nozzle blind flange bolt positions. In addition, the distance between the top of the Bridgman closure and the bottom of the blind flange is only slightly greater than 2 in. Since the connectors cannot penetrate the blind flange itself (the service machine room floor must be clear) the connectors must be less than 2 in. in diameter and penetrate around the circumference of the top nozzle directly beneath the top nozzle flange.

Limit Switches. Each top Bridgman closure is provided with two limit switch assemblies. The switches are used to indicate both vertical and rotational alignment of the closures before the sealing operation is performed. In addition, the switches control a series of indicator lights to show that all shield plugs are in place, and they actuate an electrical interlock on the one door of the service machine room which does not require a key to open. This prevents unsupervised entry to the service machine room when the shield plugs are out.

4.3.6. Insulation

Each through-tube must be lined with reflective insulation which extends between the top nozzle inner tee and the bottom nozzle inner tee. The insulation required from the bottom of the experimental stringer to the top nozzle inner tee is an integral part of the stringer assembly and is installed and removed with the assembly. Any insulation below the bottom of the stringer is installed separately prior to installation of the stringer. For attemperated fuel assemblies, insulation is placed between the attemperator flow annulus and the test section.

All insulation is of the reflective type (see sec. 4.13). A minimum of 1/4 in. of insulation is required inside the through-tube. In certain areas, such as the area of mixing of the attemperator stream and the very hot test section gas stream, additional insulation may be required. Because of the high loop gas pressure, the minimum spacing between the sheets of stainless steel reflective insulation is 1/8 in. Stainless steel corrugated sheets are used between the flat sheets to maintain the spacing. It is desirable to obstruct the flow of loop gas vertically between the sheets of insulation. However, the ends cannot be sealed, since this might result in bursting or collapsing the insulation during a rapid change in loop pressure. The insulation required between the attemperator flow annulus and the test section will be determined by the experiment design.

4.3.7. Project References

Design Criteria (CF 61-6-3)

Experimental Stringer Criteria Code D.2.3

4.4. Dummy Stringer

4.4.1. General Description

The dummy stringer is essentially an experimental stringer (see sec. 4.3) with the experimental fuel assembly replaced by a dummy fuel assembly. The dummy stringer consists of a top Bridgman closure, a shield plug, a support structure for the dummy fuel assembly, insulation, and instrumentation. The dummy stringer will be used for test purposes and prior to initial power operation of a given loop. The principal use of the dummy stringer will be for testing various components at or near the normal loop operating pressures, temperatures, and flow rates. The reactor may or may not be in operation while a dummy stringer is in use.

4.4.2. Components

Bridgman Closure. The Bridgman closure for the dummy stringer is identical to that used on an experimental stringer. Some of the thermocouple facilities normally used for measuring fuel element temperatures in an experimental stringer will be used to measure temperatures in the vicinity of the Bridgman closure. It is required that the Bridgman closure temperature not exceed 350°F. The radiation heating of the shield plug is not known and cannot be determined experimentally with a dummy stringer. Therefore, these temperature measurements can only indicate the contribution to the temperature at the Bridgman closure of heat conduction and convection along the shield plug and out radially through the inner and outer tee sections.

Tests will be run to determine the suitability of the Bridgman closure O-ring seal at temperature and pressure and to determine whether the O-ring must be replaced each time the seal is broken. In addition, the procedure and equipment for replacement of the O-ring will be tested. The limit switches which are used to indicate rotational alignment of the Bridgman closure before the sealing operation is performed will be tested under simulated normal operating conditions. The electrical connector in the closure will also be tested for operability.

Shield Plug. The shield plug is identical to that used on an experimental stringer. As previously mentioned, thermocouples will be used to determine whether the Bridgman closure temperature has been limited to less than 350°F. Shielding data will be obtained and used to evaluate the adequacy of the experimental stringer shield plug.

Dummy Fuel Assembly. It is presently planned to test a wide variety of fuel assemblies of various geometries in the EGCR loops. The dummy fuel assembly will have the same weight and geometry as the first experimental fuel assembly to be tested. The dummy fuel assembly will be necessarily constructed of a very dense material and therefore subject to

considerable gamma heating when inserted in the reactor if the reactor is or has been at power. Therefore, some gas flow must be maintained in the loop during that time. The dummy fuel assembly temperatures will be monitored, and gas flow will be adjusted to limit the temperatures. As for the case of the experimental stringer, the maximum permissible gas inlet temperature is 950°F and the maximum permissible gas outlet temperature is 1050°F.

Dummy Fuel Assembly Support Structure. The dummy fuel assembly support structure is identical to that used on the experimental stringer (see sec. 4.3).

Insulation. All insulation normally handled as an assembly on the experimental stringer is included on the dummy stringer. The dummy stringer will be used to determine whether the reflective insulation will be damaged during installation or removal operations. As described in Section 4.3, the insulation from the top nozzle tee to the bottom of the experimental stringer is installed as part of the experimental stringer assembly. Insulation below that point is installed as a part of the uninstrumented experimental assembly. In order to test the design concept of the joint between the stringer insulation and the uninstrumented experimental assembly insulation, a dummy uninstrumented assembly (see sec. 4.4.4) is required. Since the through-tube and the insulation do not have the same amount of thermal growth, a slip joint between the two sections of insulation is required. The dummy stringer will be used to prove the adequacy of this joint design.

Instrumentation. The pressure and differential pressure transmitters included in the experimental stringer are also included in the dummy stringer. The differential pressure transmitters for the dummy fuel assembly pressure drop and flow will be calibrated after the dummy stringer has been assembled but prior to installation in the through-tube.

Thermocouples are included as required to perform tests. Since the design of the experimental stringer requires that some pneumatic tubing and thermocouple leads be placed in the gas stream, the dummy stringer is also designed with similar routing of leads and tubing in order to evaluate the mechanical stability of the arrangement and the effect of the leads and tubing on the total loop pressure drop.

4.4.3. Additional Tests

In addition to the previously mentioned tests of the experimental stringer components, the dummy stringer will make it possible to obtain data on total loop pressure drop, check insertion and removal procedures, and see the effects of differential thermal expansion on stringer leads and tubing. The dummy stringer will also be used to test out the loop after major repairs are performed on the loop but before an experimental stringer is inserted.

4.4.4. Dummy Uninstrumented Assembly

As mentioned previously, a nonfueled version of the uninstrumented experimental assembly is required. This assembly will be identical to the uninstrumented experimental assembly except that the fuel assembly will be replaced by a dummy fuel assembly with the same weight and geometry as a normal fuel assembly. It will be used to establish the adequacy of the insulation slip joint design, to obtain pressure-drop data, and to check procedures for the installation and removal of uninstrumented experimental assemblies.

4.4.5. Project References

Design Criteria (CF 61-6-3)

Dummy Stringer Criteria Code D.2.2

4.5. Mainstream Gas Cooler

4.5.1. Function

The mainstream gas cooler utilizes an intermediate demineralized water-steam system to transfer the energy generated by the experimental fuel assembly to a service water heat sink. The mainstream gas enters the cooler at 1050°F and leaves at temperatures ranging from 550 to 950°F.

4.5.2. Design Criteria

The mainstream gas cooler must satisfy a number of basic criteria for proper operation of the experimental loops. The two primary criteria are (1) the cooler must be capable of removing all experimental loop heat from the loop gas, and (2) the cooler must provide secondary containment of the loop gas. The cooler must be sized to remove the energy generated in the experimental fuel assembly (1500 kw) plus the energy transferred to the loop gas by the loop compressors (50 kw) and the loop heater (200 kw), for a total heat-removal capacity of 1750 kw. Not only must the heat exchanger be designed to remove 1750 kw of heat from the loop gas, but it must be designed to have a variable heat-removal rate controlled by the condensate flow to the cooler. This condition is unique compared with conventional evaporative cooler service requirements. When conducting high-temperature low-power experiments or when starting the loop, little or no heat removal is required. In the event that forced circulation is interrupted, the cooler must go from no cooling to maximum cooling very rapidly to provide a natural-circulation driving head for the loop gas.

The cooler must provide secondary containment of the experimental loop gas. While it is normally desirable to hold leakage to a minimum in any gas system, the likelihood of having radioactive fission products in the loop gas places a stringent requirement on the design and fabrication of all primary and secondary containment systems for the loops. As a result, the loop-gas side of the cooler is of all-welded construction. Although the loop coolers are located within the reactor containment vessel, secondary containment of each cooler is required to protect personnel inside the vessel (see sec. 6.1). This secondary containment is provided by the intermediate steam system and the containment vessel that surrounds the loop gas portion of the cooler, as shown in Fig. 4.5.1.

The heat-removal capability and the secondary containment requirement are the two most important criteria for the mainstream gas coolers, but a number of other requirements must be considered in the design. For instance, the cooler dimensions must be restricted to the dimensions of the pipe chase (3 × 14 × 60 ft). The cooler should be kept short, since a short cooler provides a long cold gas leg to aid natural convection of the loop gas if forced convection is lost. The steam side of the cooler must be designed to operate by natural convection with very little superheat added to the steam. Since there is a good possibility that some of the radioactive fission products, such as iodine and bromine, might plate out on the colder surfaces of the cooling tubes, it is highly desirable to design a cooler which can be decontaminated on the loop-gas side.

A rather stringent design limitation is imposed by the limited head capabilities of the loop compressors. The loop pressure-drop calculations indicate that the compressors may be unable to meet some of the lower power design points because of pressure-drop limitations. Consequently the cooler must be designed to have a low loop-gas pressure drop.

There are several other design features that are desirable but not essential. First, it is desirable to have access to the steam side of the cooler in order to check the integrity of the system and to repair or to plug any defective tubes. Also it is desirable to be able to drain the lowest point in the steam system in order to blow down the system occasionally to remove sludge and corrosion products that might collect during the boiling process. This requirement is not essential if access to the steam side of the cooler is provided to facilitate cleaning the tubes and header.

4.5.3. Design

After the decision was made to use an evaporative type of cooler to remove the energy from the loop gas, an extensive analysis was made to choose the cooler design that best satisfied the criteria set forth in section 4.5.2. The different designs considered and evaluated included straight-through tube designs using two tube sheets, floating head arrangements, U-tube designs, and re-entrant or bayonet tube designs.

UNCLASSIFIED
ORNL-LR-DWG 58357

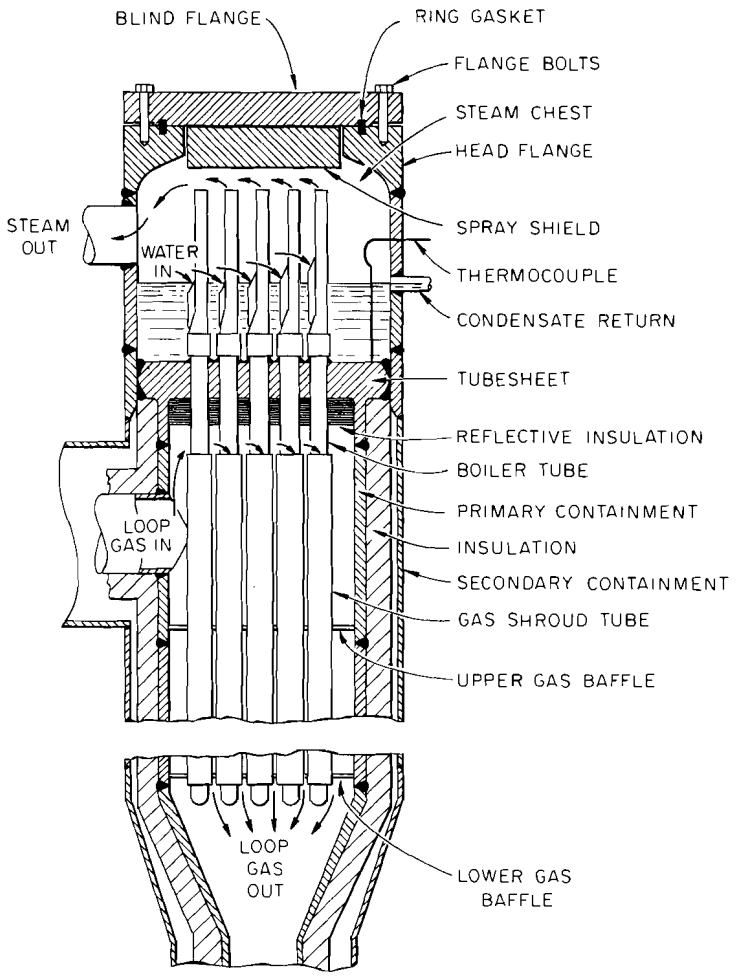

Fig. 4.5.1. Mainstream Gas Cooler.

All concepts were evaluated with the loop gas on either the tube side or the shell side of the cooler.

The concept chosen for detailed design was a re-entrant tube exchanger with gas flowing around tubes containing boiling water. A conceptual design of the system is shown in Fig. 4.5.1. The final cooler design may differ somewhat from that pictured, since it is intended to have the vendor complete the final design and guarantee performance of the unit. The design shown in Fig. 4.5.1 will be presented as the suggested design, since it appears to satisfy the criteria better than the other concepts considered.

In the design shown in Fig. 4.5.1, the gas enters the side of the cooler, flows up around the outside of the shroud tubes, enters the annulus between the shroud tube and the boiler tube, and then passes down the annulus where it is cooled and exhausted to the bottom of the exchanger. The condensate enters the side of the cooler near the bottom of the steam chest, which forms the top part of the cooler. Once the condensate reaches a given level above the tube sheet, it enters the downcomer tubes that project through the top section of the main steam tubes above the tube sheet (see Fig. 4.5.2 for tube details). The condensate then flows down the center or downcomer tube to the bottom of the boiler tube.

There will be no net steam generation in the downcomer tube once steady-state conditions are reached, since the condensate-steam mixture in the annulus between the downcomer and boiler tubes should never exceed the saturation temperature. Also, the condensate in the downcomer is at a slightly higher pressure than the mixture between the downcomer tube and boiler tube; this should prevent boiling the downcomer.

After condensate reaches the bottom of the downcomer tube, the flow direction reverses and the water passes up through the annulus between the downcomer and boiler tubes, where steam generation takes place as heat is transferred from the loop gas to the condensate in the annulus. The resulting steam-water mixture continues to rise until exhausted from the boiler tubes into the steam dome and chest at the top of the cooler. Most of the entrained water separates in the spray shield and falls back into the condensate above the tube sheet. The saturated steam and some entrained water are then exhausted from the steam chest by means of a 5-in. steam line that transfers the steam to the loop condenser on the sixth floor. For a detailed description of the mainstream cooling system see Section 5.6.

As was discussed earlier, the heat transfer rate from the loop gas to the steam is regulated by controlling the rate of condensate flow to the cooler. The cooler is designed so that increasing the condensate flow rate increases the effective heat transfer area. This is accomplished by staggering the downcomer tubes at various elevations in the steam chest. For a given condensate level in the steam chest, the inlets to some downcomer tubes will be below the condensate level and thus operating at

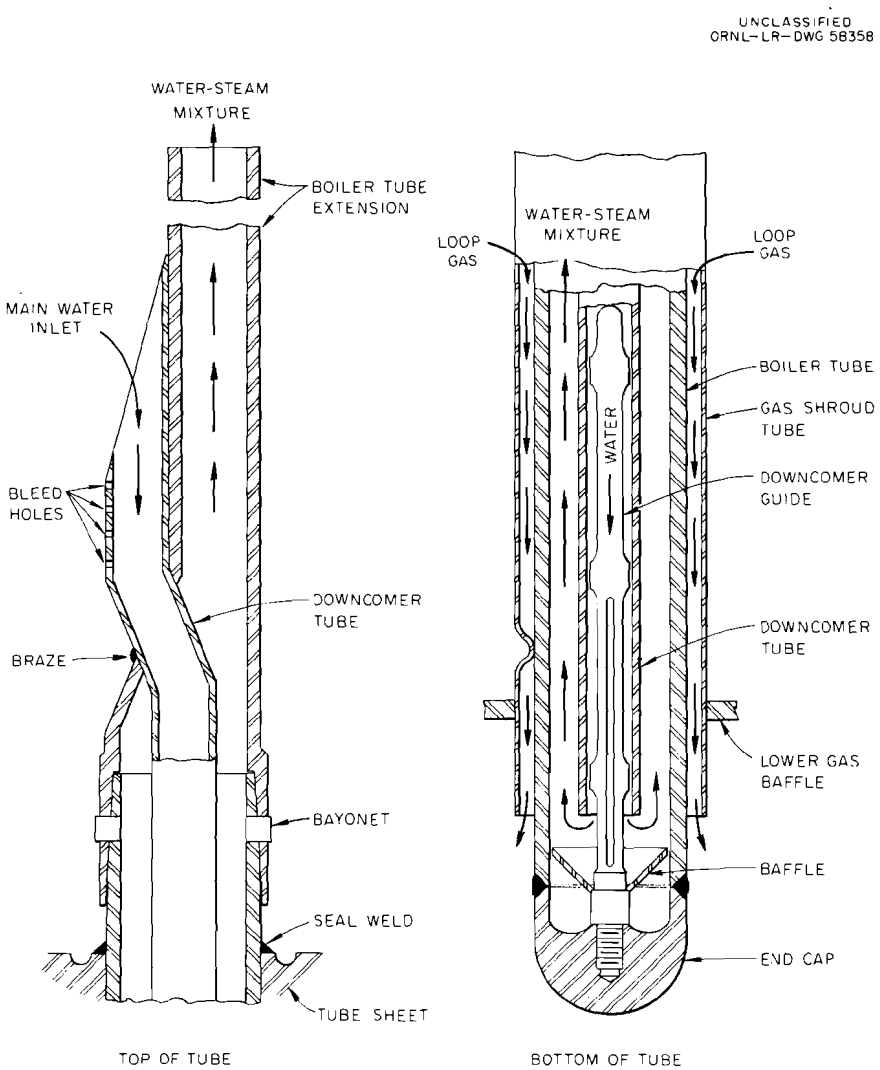

Fig. 4.5.2. Cooler Tube Details.

their full heat-removal capacity, while other tubes, whose downcomer inlets are above the water level, will be dry. Consequently, increasing the condensate flow to the cooler raises the condensate level in the steam chest thereby bringing more tubes into operation and increasing the loop cooling. By reversing the process (closing the condensate return valve), the cooling rate can be reduced to nearly zero. There will be some heat transfer through the cooler tube sheet, since it is intended that a finite water level will always be maintained on the tube sheet to prevent excessive thermal stresses. The amount of heat transferred through the tube sheet is minimized by using several inches of reflective insulation on the gas side of the tube sheet.

The conceptual design shown in Fig. 4.5.1 utilizes 38 boiler tubes having an effective heat transfer length of 11 ft each. The steam system temperature will ordinarily be less than its design operating temperature of 400°F (247 psia) at full power. The gas-side pressure drop calculations for a 1000-psia CO_2 loop indicate that the pressure drop for full cooling will be less than 1.1 psi, while the pressure drop with no cooling will be less than 1.8 psi. Steam-side pressure drop calculations indicate that the system will have natural recirculation with the steam-condensate mixture leaving an operating tube with an exit quality of 5 to 10%. A stress analysis study has not been completed, but the final design specifications will provide that all primary stresses will meet the ASME code requirements and that all transient thermal stresses will be below those permitted by the Naval Code (see sec. 6.2).

A number of different materials will be used in fabricating the cooler. All materials in contact with the loop gas will be fabricated from type 347H stainless steel, type 304 stainless steel, or INOR-8. The system will be designed to contain the loop gas at a steady-state condition of 1100 psia and 1075°F. All materials in contact with the condensate and steam will be nickel-base alloys (Inconel or INOR-8), except the spray shield at the top of the cooler, which will be fabricated of type 304 stainless steel. The steam side of the cooler will be designed to withstand an internal pressure of 1200 psia at 650°F. The mainstream loop piping below the tube sheet will be covered with 2 in. of mineral insulation. The secondary containment piping will be made of grade B carbon steel.

The proposed cooler design meets all the principle design criteria outlined in Section 4.5.2 and also satisfies one of the two secondary criteria. The cooler provides complete secondary containment; it is reasonably compact; it has a low loop gas pressure drop; and it is possible to decontaminate the loop gas side of the unit. In addition, a blind flange, located at the top of the cooler, permits access to the steam side of the unit.

Because of the geometrical arrangement of the boiler tubes, it is impossible to effectively blow down the steam system. Consequently, every precaution will be made to use materials that are noncorrosive to

prevent corrosion-sludge accumulations in the boiler tubes. Since the demineralized-water supplied to the cooler will have been previously boiled and condensed in the reactor steam system and since the cooler steam system is a closed cycle, the accumulation of sludge in the boiler tubes due to carryover in the water system should not be rapid. Occasionally it may be necessary to clean out some of the boiler tubes. This will be done by opening the blind flange at the top of the cooler, removing the top section of the boiler tube and the downcomer tube (which is attached to the top section), and then removing the accumulated sludge in the bottom of the tube. Again, it should be emphasized that such a cleaning procedure will be required infrequently, since the system is non-corrosive and the requirement for makeup water is small.

One of the troublesome aspects of the proposed design was the thermal-shock problem. As was discussed earlier, at intermediate power levels, some of the boiler tubes will be operating at full power, while others will be dry. Increasing the condensate flow in this case means that some of the boiler tubes running dry at 1050°F will be rapidly flooded with relatively cold water that will create a thermal-shock condition. This problem is alleviated by drilling a number of small bleed holes in the downcomer tubes below the inlet. These holes permit a small condensate flow to build up to each tube before the full flow conditions are reached, thereby gradually cooling the tube and minimizing the thermal shock.

Another problem associated with this design was vibration of the downcomer tube during the boiling process. This condition could be prevented by attaching spacers along the downcomer tube. However, the fabrication would be somewhat complicated, since the spacers would have to be fastened inside the boiler tube to insure that possible fretting between the boiler tube and the downcomer would not damage the boiler tube. In order to alleviate this problem, the bottom of the downcomer tube is held in place by a downcomer guide that is fastened to the bottom of the boiler tube and projects into the downcomer tube. This spacer keeps the downcomer tube centered in the boiler tube but permits differential expansion between the tubes.

4.5.4. Project References

Design Analyses (CF 61-6-3)	
Mainstream Gas Cooler	
Preliminary Stress Analysis of Mainstream Gas Cooler	
Preliminary Design Drawings (CF 61-6-2)	
Mainstream Gas Cooler	F-RD-10475
Specifications (CF 61-6-5)	
Mainstream Gas Cooler	JS-128-113
Condenser for Mainstream Gas Cooler	JS-128-114

4.6. Mainstream Gas Heater

4.6.1. Functions

The functions of the mainstream gas heater are (1) to preheat the experimental loop to its required preoperating temperature before fission heat is produced in the experimental fuel assembly, (2) to maintain the loop at a preset temperature during any experiment which does not have its own fission heat source, and (3) to maintain the loop at permissible operating temperatures during shakedown or test runs with the reactor shut down or the experimental fuel assembly removed from the loop. During normal loop operation, the heater may be used to manually shim the gas inlet temperature to the test section of the loop.

The experimental loop design criteria (see sec. 4.6.3) specify that the heater is to be capable of increasing the inlet gas temperature to the test section at least 50°F for all specified loop operating conditions. To do this requires a maximum of 175 kw of heater power. Detailed heat transfer, stress, and other design calculations for the mainstream gas heater are presented elsewhere (see sec. 4.6.3).

4.6.2. Description

The EGCR experimental loop heater is an electrically heated U-tube consisting of two 20-ft sections of straight pipe joined at one end by a standard 180°-turn fitting. Heat is produced by passing a large electric current (up to 20 000 amp) directly through the two straight pipe sections of the U-tube. No electric current passes through the 180° turn or through the welds at each end of the straight pipe sections. The entire heater assembly and system, including a high current transformer, is located inside the experimenters' cell.

Because of the variation of electrical resistivity of the pipe with temperature, the rate at which heat can be added to the loop gas depends on the temperature of the heated pipe sections. The maximum heat rate for the mainstream gas heater is 210 kw. This rate can be attained when the average gas temperature in the heater is about 500°F. At lower average loop gas temperatures, the heat rate is limited by the current capability of the high-current transformer that supplies electric power to the heater. At high average loop gas temperatures the heat rate is limited by the potential capability of the transformer. For heater pipe of nominal wall thickness and average gas temperatures of 100 or 950°F, the maximum heat rate is 190 kw.

The heated pipe is seamless type 347H stainless steel (6-in. sched.-80). At the maximum heat rate of 210 kw, the differences between the bulk gas temperature and wall temperature are about 80°F for helium and 100°F for CO_2, and the temperature difference across the wall is about 15°F. The resulting thermal stress at the inner pipe surface is 5000 psi

and at the outer surface 1900 psi. The heated pipe is externally insulated with 3 in. of mineral insulation.

The high-current transformer is air cooled. It has a maximum current capability of 20 000 amp and a maximum emf capability of 12 v. The electrical connections to the pipe are bars of nickel welded to the pipe. The pipe goes through a hole in the nickel bar and is welded on both sides. In order to minimize cell cooling requirements, the bus bars are designed for low resistance. The resistive heating of the air cooled bus bars is about 10 kw. The entire heater system is protected against overtemperature. Temperatures are sensed in the transformer windings, the bus bars, and at several points along the heated pipe. The primary voltage to the high-current transformer is supplied from a saturable reactor located in the experimenters' crane bay. The voltage from this reactor is continuously variable from that required for rated secondary voltage of the high-current transformer to that required for 10% of rated secondary voltage. All pipe supports that are fastened to the heated pipe or to the 180° turn are electrically insulated.

4.6.3. Project References

Design Criteria (CF 61-6-3)	
Electric Heater Criteria	Code B.3.0
Criteria for Electrical Pipe Connections for EGCR Experimental Loop Heaters	Code B.3.2
Design Analyses (CF 61-6-4)	
EGCR Loop Heater Assembly	
Preliminary Design Drawings (CF 61-6-2)	
Electric Resistance Gas Heater	E-RD-11082
Specifications (CF 61-6-5)	
Saturable Reactor and High Current Transformer	JS-128-110

4.7. Mainstream Gas Filter

4.7.1. Description

The entire loop coolant flow passes through a mainstream filter system where most of the particulate matter in the circulating gas is removed. This system, shown in Fig. 4.7.1, consists of a filter vessel, a bypass valve and piping, two isolating valves, two disconnect flanges, and associated lead shielding. The filter vessel contains a prefilter, an absolute filter, and a postfilter. The prefilter consists of several

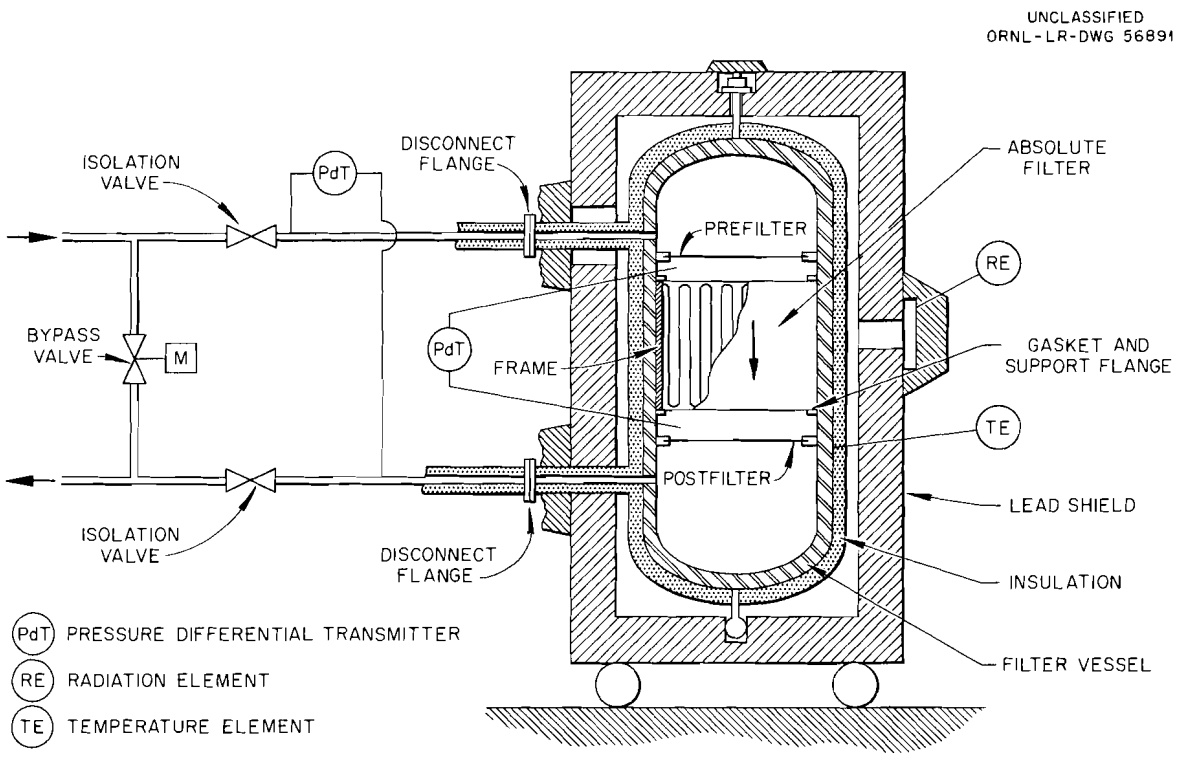

Fig. 4.7.1. Mainstream Filter.

layers of stainless steel wire screen. The first layer is 100-mesh type 304 stainless steel, which will stop all particles larger than 140 μ (0.0055 in.). This is followed by a heavier screen and additional support structure.

The absolute filter is a Flanders ceramic AIRPURE filter (5F40R-d), or equivalent, with an over-all diameter of 18 in. and a depth of 11 1/2 in. This filter has an efficiency of 99.9% for 0.3-μ particles. For the normal operating conditions of the loop, the highest pressure drop through the clean absolute filter is 5.5 in. H_2O (based on the above filter design) for 9190 lb/hr of helium at 950°F and 500 psia. The pressure drops are considerably smaller for all other helium and all CO_2 operating conditions. The filter elements are guaranteed to withstand a pressure drop of 10 in. H_2O, and hence the pressure drop can increase by 4.4 in. H_2O before the filter has to be removed or changes in loop operation made to reduce the pressure drop. If the loop cooler should fail during operation with helium at 500 psia, the inlet gas temperature to the filter will increase toward 1050°F and the pressure drop will increase toward 6.8 in. H_2O. However, corrective action will be taken immediately by the loop safety circuit.

The absolute filter is supported by a 1/2-in.-thick frame bearing against a flange built around the inner surface of the filter vessel. A 40-mil thickness of filter paper is used for the flange gasket. The frame is made from compressed Fiberfrax, a Carborundum Company ceramic fiber with duPont-colloidal silica as the adhesive. The filter paper and the gasket are made from "Fiberfrax" plus asbestos fibers and a small amount of modified starch ether as binder. Because of the adhesive and binder in the frame and in the filter paper, gaseous products are given off by the filter assembly upon reaching approximately 500°F. Prefiring to a high temperature is required to drive off these gaseous products prior to installation of the filter assembly in the filter vessel.

The postfilter is provided to stop any large particles if the absolute filter disintegrates. It consists of several layers of stainless steel screen, the first being 40 mesh type 304 stainless steel, which stops all 330-μ and larger particles. This is followed by a coarser screen and additional support structure, as in the prefilter.

The filter vessel is an all-welded type 347 stainless steel pressure vessel designed to contain the loop coolant at 1100 psia and 975°F. It is connected to the loop by manually operated isolation valves and disconnect flanges (see sec. 4.11) on the inlet and outlet lines. Because of the possible accumulation of fission products in the absolute filter, the filter vessel is completely surrounded by 4 in. of lead. When the absolute filter requires replacement, the filter vessel and shield will be carried to the disposal area where the shield will be removed and decontaminated for reuse. The filter and filter vessel will be disposed of as a unit by burial.

The filter assembly is bypassed by a line containing a motor-operated shutoff valve. This permits the loop to operate with the filter out of service and provides a relief in case the filters become clogged. The valve is capable of going from a fully closed to a fully open position in 20 sec.

4.7.2. Instrumentation

The instrumentation consists of two differential pressure transmitters (PdT), a radiation element (RE), and a temperature element (TE) (see Fig. 4.7.1). One differential pressure transmitter is connected across the filter bypass valve to indicate gross clogging of the filter system. This transmitter operates over a range of approximately 0 to 60 in. H_2O and has an accuracy of ±1 in. H_2O. It operates an annunciator at the experimenters' control board when the pressure drop reaches a preset value. The second differential pressure transmitter is across the absolute filter only. Since the absolute filter is guaranteed to withstand a pressure drop of only 10 in. H_2O, the absolute filter must be removed or bypassed when this value is reached. The transmitter has a range of 0 to 15 in. H_2O, with an accuracy of ±0.5 in. H_2O. When the pressure drop approaches the filter bursting value, the transmitter opens the filter bypass valve a sufficient amount to reduce the pressure drop to its original operating level. This action is indicated at the experimenters' control board. The radiation monitor located at the side of the filter gives quantitative measurements of activity accumulations in the filter vessel up to 3×10^4 r/hr.

4.7.3. Project References

Design Criteria (CF 61-6-3)	
Filter System Criteria	Code B.1.0
Design Analyses (CF 61-6-4)	
Mainstream Gas Filter System	
Preliminary Design Drawings (CF 61-6-2)	
Mainstream Gas Filter Assembly	E-RD-10150
Mainstream Gas Filter Details	D-RD-10141
Mainstream Gas Filter Shield Assembly	E-RD-10175
Specifications (CF 61-6-5)	
Mainstream Gas Filter Element for EGCR Experimental Loop	JS-128-108

4.8. Loop Pressure Drop

4.8.1. General

In order to initiate procurement of the loop compressors at an early stage in the design effort, loop pressure drop estimates were made based on the loop piping layouts and conceptual component designs as they existed at that time. These estimates were revised twice during the design process. The originally specified values plus the revised values are given in Section 4.8.4 for each of the eight loop design conditions.

4.8.2. Basic Assumptions

The following basic assumptions were made during the process of calculating the total loop pressure drop: (1) the pressure drop in equipment and piping can be based on isothermal flow at the arithmetic average temperature of the inlet and outlet gas, (2) the piping from the outlet of the in-pile test section to the cooler inlet is at a uniform temperature of 1050°F, (3) the piping from the outlet of the cooler to inlet of the heater is at a uniform temperature of 550°F (or 900°F) with the heater on and 600°F (or 950°F) with the heater off, (4) the piping from the outlet of the heater to the inlet of the in-pile test section is at a uniform temperature of 600°F (or 950°F), (5) the loop gas inside the cooler tubes is at a uniform temperature of 800°F (or 975°F) with the heater on and 825°F (or 1000°F) with the heater off, (6) the through-tube is insulated on the inside with reflective insulation totaling 1/3 in. on a radius including the inside jacket, (7) there is no compressor power input to the system, and (8) all isolation valves are full-clearance gate valves.

4.8.3. Calculations

The mainstream gas flow path for the small helium- or CO_2-cooled loop includes the following pressure decreasing components: in-pile test section, pipe and fittings, a mainstream gas cooler, a mainstream gas filter, a mainstream gas heater, and six isolation valves.

Total pressure drops were computed for helium and CO_2 cooling at pressures of 500 and 1000 psia. The in-pile test section was assumed to be generating 1500 kw of combined fission and gamma heat with a gas inlet temperature of 600°F and an outlet temperature of 1050°F. The case of reduced power operation (335 kw) for a gas inlet temperature of 950°F was also calculated assuming a constant mass flow rate. In all cases it was assumed that the exit gas from the in-pile section was attemperated to 1050°F.

In-Pile Test Section. The loop design criteria[9] state that "The design pressure drop for the in-pile section of the loop will be determined from the following formula:

$$\frac{W_p}{p} = 0.02 \quad , \tag{1}$$

where

W_p = pumping power required for in-pile section, kw,

p = total power output of in-pile section, kw."

Since pumping power is the work required per unit time to move a given mass per unit time against a given resistive force (head), the pumping power for the in-pile section is

$$W_p = \frac{Mh}{3413\ J} \quad , \tag{2}$$

where

M = mass flow rate, lb/hr,

h = in-pile section head loss, ft,

J = heat equivalent of work, 778 ft-lb/Btu.

In order to satisfy the basic requirement of heat transport equal to heat generation, it is necessary that

$$M = \frac{3413\ p}{C_p(t_2 - t_1)} \quad , \tag{3}$$

where

C_p = specific heat of gas, Btu/lb·°F,

t_1 = inlet temperature to in-pile test section, °F,

t_2 = outlet temperature from in-pile test section, °F.

The exact value of C_p to be used in Eq. (3) is not known, but a good approximation for most gases is to evaluate C_p at $(t_1 + t_2)/2$.

---

[9]EGCR Experimental Loop Criteria (uncoded), in ORNL CF 61-6-3, EGCR Experimental Loops Design Criteria, June 1961.

The simultaneous solution of Eqs. (1), (2), and (3) gives the maximum resistive head (h, ft) which will be encountered in the in-pile section:

$$h = 0.02JC_p(t_2 - t_1) \quad . \tag{4}$$

The in-pile test section head loss can be converted to a defined pressure drop by the following defining equation:

$$\Delta P = \rho_1 \, h \quad , \tag{5}$$

where

ΔP = test section pressure drop, lb/ft^2,

ρ_1 = inlet gas density, lb/ft^3.

Pipes and Fittings. The following equation for pressure drop was used in all cases where the pipe and fittings could be reduced to an equivalent length of straight pipe:

$$\Delta P = \frac{3.36 \times 10^{-6}}{\rho} f \, L_e \frac{W^2}{D_e^5} \quad , \tag{6}$$

where

ΔP = pressure drop, psi,

ρ = arithmetic average gas density, lb/ft^3,

f = Darcy friction factor,

D_e = equivalent diameter, in.,

L_e = equivalent length, ft,

W = mass flow rate, lb/hr.

Values for the friction factor were taken from Crane Technical Paper No. 410, p. A-25.[10] The stainless steel was assumed conservatively to have the same relative roughness as clean commercial steel. The equivalent lengths of fittings were also worked out from data given in ref. 10, pp. A-27, A-30, and A-31.

---

[10]Flow of Fluids Through Valves, Fittings, and Pipe, Technical Paper No. 410, Engineering Division of Crane Co., Chicago, 1957.

In all cases the equivalent diameter, D_e, was defined as

$$D_e = \frac{4A}{C} \quad , \tag{7}$$

where

A = free flow area, in.^{2},

C = wetted perimeter, in.

Expansion and Contraction Losses. Expansion and contraction losses were calculated from loss coefficients given in ref. 10, p. A-26, and converted to equivalent pipe lengths on p. A-31.

Mainstream Gas Cooler. The mainstream gas cooler pressure drop consisted of a series of expansion and contraction losses plus friction losses in the cooling tube annuli. These pressure drops were calculated by the methods outlined for pipes and fittings and for expansions and contractions, except that the compressibility of the gas was taken into account in calculating the friction losses because of the large change in gas density.

The equivalent of Eq. (6) for compressible fluid flow is

$$\Delta P = 5.58 \times 10^{-7} \left(\frac{1}{\rho_2} - \frac{1}{\rho_1}\right) \frac{W^2}{D_e^4} + \frac{3.36 \times 10^{-6}}{\rho} f\, L_e \frac{W^2}{D_e^5} \quad , \tag{8}$$

where

ρ_1 = inlet gas density, lb/ft^3,

ρ_2 = outlet gas density, lb/ft^3;

ρ, ΔP, W, f, L_e, and D_e are as defined for Eq. (6).

Mainstream Gas Filter. The mainstream gas filter pressure drop consisted of an expansion and contraction at the inlet and exit, respectively, plus the pressure drop through the prefilter, absolute filter, and postfilter.

The inlet and exit losses were determined by the techniques discussed previously. To determine the absolute filter pressure drop an element manufactured by Flanders Filters, Inc., was selected as a typical element meeting the loop filter requirements. For this given filter the

pressure drop is[11]

$$\Delta P_h = \frac{K'V\mu}{\rho} \quad , \tag{9}$$

where

ΔP_h = pressure drop in feet of fluid flowing,

V = fluid superficial velocity,

μ = fluid viscosity,

ρ = fluid density,

K' = constant depending on properties of filter media.

Converting Eq. (9) to pressure drop in inches of water and using either mass flow rate (W, lb/hr) or volumetric flow rate (Q, ft^3/hr) gives

$$\Delta P = \frac{K\ W\mu}{\rho A} \tag{10}$$

or

$$\Delta P = \frac{K\ Q\mu}{A} \quad , \tag{11}$$

where A is the superficial flow area and K is another constant.

Each filter element is rated by the volumetric flow rate of air at standard pressure and temperature required to produce a pressure drop of 1 in. of H_2O across the element. Therefore, if subscript "a" is used to designate the rated filter, the pressure drop in inches of water for any filter of the same material and depth as that of the rated filter will be

$$\Delta P = \Delta P_a \left(\frac{A}{Q\mu}\right)_a \frac{W\mu}{\rho A} \quad . \tag{12}$$

---

[11]Personal communication from Dr. Melvin First to E. R. Schmidt.

Using the rated values for Flanders Filter 5F40-d size F,[12] and assuming the mainstream gas filter will be an 18-in.-o.d., 1/2-in.-frame filter, the absolute filter pressure drop (in. H_2O) will be

$$\Delta P = 0.000887 \frac{W\mu}{\rho} \quad . \tag{13}$$

The pressure drops through the prefilter and postfilter were calculated from[13]

$$\Delta P = \frac{a}{C^2} AV^2 \quad , \tag{14}$$

where

ΔP = pressure drop, psi,

a = 0.00674,

A = fractional open area,

C = a function of $\frac{b\ V\rho}{\mu}$ (see ref. 13),

$b = 7740 \frac{D_0}{A}$,

D_0 = size of projected hole, in.,

V = velocity, ft/sec,

ρ = density, g/cm^3,

μ = viscosity, centipoise.

Isolation Valves. The pressure drop in the isolation valves was calculated from the manufacturers' values for valve flow coefficients (C_V) by applying the following manufacturers' sizing formula:

$$Q = 1360\ C_V \left(\frac{P\ \Delta P_V}{T\ S}\right)^{1/2} \quad , \tag{15}$$

where

Q = volume flow, ft^3 (STP)/hr,

P = inlet pressure, psi

ΔP_V = pressure drop across valve, psi,

---

[12]Flanders Filter Catalog, p. C-23.

[13]Investigation of Metallic Filter Cloths, Multi-Metal Wire Cloth Co., Inc., p-4.

T = absolute temperature, 460 + °F,

S = specific gravity of gas at STP (air = 1),

C_V = valve flow coefficient.

For the EGCR experimental loops, Eq. (15) reduces to

$$\Delta P_V = 8.5 \times 10^{-5} \left(\frac{T}{PS}\right) \left(\frac{1}{C_V^2}\right) W^2 \quad , \tag{16}$$

where

W = mass flow, lb/hr;

ΔP_V, T, P, S, and C_V are as defined for Eq. (15).

4.8.4. Results

The calculated total loop pressure drops (for the loop design as of October 28, 1960) are given in Tables 4.8.1 and 4.8.2 for CO_2 and helium cooling, respectively. Also listed are the previously calculated values reported on June 6, 1960. The considerable increase in pipe pressure drop given by the revised values was due to a large increase in the equivalent length of pipe and fittings resulting from the addition of several expansion loops, the addition of insulation to the inside of the through-tube (not considered in the first estimate), and the use of 4-in. pipe for certain sections of the through-tube entrance and exit piping. The valve pressure drop was reduced by selecting lower pressure drop valve designs and eliminating the need for a diverter valve. The heater pressure drop reduction resulted from simplifying the heater design. The cooler pressure drop increase resulted from an increase in the complexity of the cooler design. The filter design remained essentially unchanged. Since this pressure drop estimate was completed, the loop design has been stable and further major changes are not anticipated.

A comparison of the revised pressure drop calculations and the original compressor specifications (dated Feb. 1, 1960) is presented in Table 4.8.3 for the heater-on case. The compressor operating problems brought about by this increase in total loop pressure drop are discussed in Section 4.9.

4.9. Loop Compressors

4.9.1. Description

Three centrifugal gas-bearing compressors are connected and operated in series in each experimental loop to provide the required loop gas mass

Table 4.8.1. Comparison of Results of Previous and Revised Pressure Drop Calculations for a Small CO_2-Cooled Experimental Loop

Heater-Off Case

	Pressure Drop (psi)							
	Operating Condition 1		Condition 2		Condition 3		Condition 4	
	Previous[a]	Revised[b]	Previous	Revised	Previous	Revised	Previous	Revised
In-pile experimental section	53.6	53.0	8.9	8.9	26.2	26.2	4.4	4.4
Piping and equipment								
Pipe	3.25	6.103	4.17	7.754	6.40	12.114	8.30	15.474
Diverter valve	1.97		1.97		3.93		3.93	
Cooler	0.80	1.350	0.79	1.730	1.35	2.700	1.40	3.460
Isolation valves	1.17	0.116	1.54	0.166	2.33	0.233	3.10	0.332
Filter	0.15	0.152	0.21	0.217	0.340	0.304	0.410	0.430
Heater	0.86	0.200	1.12	0.276	1.65	0.397	2.26	0.553
Total piping and equipment	8.2	7.9	9.8	10.1	16.0	15.8	19.4	20.3
Total system	61.8	60.9	18.7	19.0	42.2	42.0	23.8	24.7

[a]June 6, 1960.

[b]October 28, 1960.

Table 4.8.2. Comparison of Results of Previous and Revised Pressure Drop Calculations for a Small Helium-Cooled Experimental Loop

Heater-Off Case

	Pressure Drop (psi)							
	Operating Condition 5		Condition 6		Condition 7		Condition 8	
	Previous[a]	Revised[b]	Previous	Revised	Previous	Revised	Previous	Revised
In-pile experimental section	21.2	21.2	3.5	3.5	10.6	10.6	1.7	1.8
Piping and equipment								
Pipe	1.80	3.716	2.25	4.681	3.60	7.399	4.49	9.254
Diverter valve	1.06		1.06		2.13		2.13	
Cooler	0.42	0.955	0.43	1.190	0.72	1.910	0.83	2.380
Isolation valves	0.63	0.064	0.83	0.091	1.24	0.127	1.65	0.181
Filter	0.13	0.141	0.17	0.206	0.24	0.282	0.34	0.408
Heater	0.46	0.124	0.61	0.168	0.92	0.246	1.22	0.332
Total piping and equipment	4.5	5.0	5.4	6.3	8.9	10.0	10.7	12.6
Total system	25.7	26.2	8.9	9.8	19.5	20.6	12.4	14.4

[a]June 6, 1960.

[b]October 28, 1960.

Table 4.8.3. Comparison of Compressor Specification[a] and Revised[b] Pressure Drop Estimates for Small Helium- or CO_2-Cooled Experimental Loop

Heater-On Case

	Operating Condition							
	1	2	3	4	5	6	7	8
Coolant gas	CO_2	CO_2	CO_2	CO_2	He	He	He	He
Total system pressure drop, psi								
Specified[a]	59.1	20.1	37.5	19.0	25.5	9.4	19.2	11.0
Revised estimate[b]	60.7	18.8	41.6	24.2	26.1	9.7	20.3	14.1

[a]February 1, 1960.

[b]October 28, 1960.

flow through the in-pile experiment. A check valve is connected in parallel with each compressor. These compressors are designed for operation with either CO_2 or helium. Figure 4.9.1 is a drawing of an individual compressor. Each compressor contains an electric motor rotor and impeller mounted on a common shaft and supported on gas-film bearings, with the bearings lubricated by the gas in the experimental loop. The compressor pressure vessel consists of the compressor volute and the motor housing. The motor housing is joined to the volute by a bolted and seal-welded flange joint.

The electric motor and bearing compartment are cooled by conduction to a water-cooled jacket and by a small centrifugal-type impeller attached to the compressor shaft which circulates the gas in the compartment across the water-cooled surfaces. The motor stator windings have Class H insulation, consisting of glass tape with a silicone bonding agent for maximum radiation resistance. The electric motor leads are insulated and sealed at the motor housing by a ceramic type of insulator, with the final closure seal welded. One additional opening in the pressure vessel is provided for supplying high-pressure gas from an external source for jacking the bearings. The external connection to this opening can be seal welded.

All instrumentation such as thermocouples and speed-measuring devices will be removed after the vendors' tests are completed, and the opening will be plugged and seal welded. A shoulder is to be provided on the inner end of all such plugs to prevent missile generation in case of failure of the seal weld.

4.9.2. Design and Manufacture

The loop compressors are being designed and manufactured by Bristol Siddeley Engines, Limited, of England. The design and manufacture conforms to practices outlined in Sections II and VIII of the ASME Boiler and Pressure Vessel Code and Case Interpretations 1270N and 1273N, with the exception that the combined pressure and thermal stresses in one portion of the vessel exceeded the values permitted by the ASME code. The combined pressure and thermal stresses presented a fatigue problem, and the Navy code was used as a basis for establishing the maximum allowable combined stress (see sec. 6.2). The ASME code is not intended for fatigue analysis (or for rotating machinery). The compressor pressure vessel (type 347 stainless steel) was specified to contain all portions of the rotating assembly in case of mechanical failure. No castings were permitted. Each completed pressure vessel was subjected to a hydrostatic test and a pneumatic test with air at 1760 psia. These tests were conducted in accordance with the ASME code. Each impeller was overspeed tested at 130% of normal maximum operating speed. The final leakage specification was 10^{-6} cm^3 (STP)/sec for the assembled compressor filled with helium to a pressure of 1200 psig. The compressor pressure vessel design pressure is 1000 psia at 900°F.

4.9.3. Consideration of Thermal Stress

In the original design of the compressor, as shown in Fig. 4.9.1, an excessively high thermal stress existed at the junction of the cylindrical portion of the vessel and the adjacent flanges because of the close proximity

UNCLASSIFIED
ORNL-LR-DWG 49838

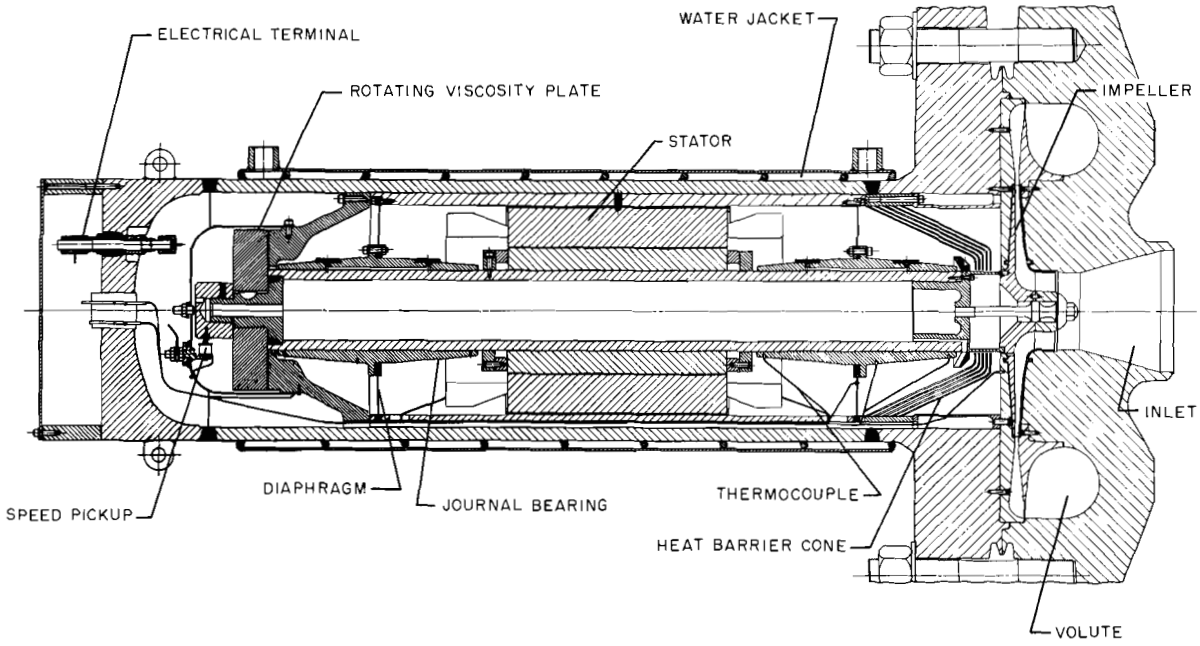

Fig. 4.9.1. Gas Bearing Compressor — Bristol Siddeley Engines Ltd. for EGCR In-Pile Loops.

of a cooling-water jacket. The water jacket was subsequently moved as far away from the flange as was considered possible and still provide adequate cooling of the motor and bearings. After the redesign, the combined stresses at the flange and cylinder junction still exceeded the maximum value permitted by the Navy code for 500 cycles of operation, even when deformation would not effect operation. One solution to the problem would be to reduce the number of operating cycles. However, the compressor manufacturer stated that plastic deformation would not effect compressor performance, thus justifying an allowable stress of twice the yield point (see sec. 6.2). The stresses with the optimized compressor vessel design still exceed twice the yield point. Electrical heaters have therefore been installed on the external surface of the cylindrical portion of the pressure vessel to reduce the combined stresses to the allowable level.

4.9.4. Normal Compressor Performance

For normal operation, all three compressors are operated to supply the required head and mass flow. Table 4.9.1 lists Bristol Siddeley's estimated compressor performance with all three compressors operating at the eight operating conditions originally specified. Subsequent

Table 4.9.1. Bristol Siddeley's Estimated Compressor Performance With Three Compressors Operating in Series[a]

	Operating Condition Number							
	1	2	3	4	5	6	7	8
Gas	CO_2	CO_2	CO_2	CO_2	He	He	He	He
Inlet pressure,[b] psi	1000	1000	500	500	1000	1000	500	500
Inlet temperature, °F	550	900	550	900	550	900	550	900
Mass flow, lb/hr	41 000	41 000	41 000	41 000	9190	9190	9190	9190
Pressure rise per stage, psi	19.7	7.0	12.5	6.3	8.5	3.1	6.4	3.7
Number of stages	3	3	3	3	3	3	3	3
Total pressure rise, psi	59.1	21	37.5	18.9	25.5	9.3	19.2	11.1
Motor horsepower per stage, hp	41.7	16.2	36.0	29.7	29.5	13.7	40.3	33.5
Speed, rpm	3960	2800[c]	4450	4450	7260	6000	10 050	10 900

[a]Data submitted with Bristol Siddeley Proposal No. 16A-32986-94, March 1960.

[b]Inlet pressure given as nominally 500 or 1000 psia; as a result, the actual motor horsepower will be approximately 2% higher than indicated.

[c]Minimum continuous speed for safe bearing operation is 2800 rpm (requires a 47-cps power supply).

alterations to loop piping and refinements to loop pressure drop calculations (see sec. 4.8) have resulted in a higher required pressure rise across the compressors than originally specified, as shown in Table 4.9.2. With three compressors operating, the revised loop pressure drop requirements can still be obtained at the originally specified inlet pressure and temperature by changing the compressor speed slightly. For example, operating condition 8 requires that the speed be increased from 10 900 to 11 400 rpm, and condition 2 requires reducing the speed from 2800 to 2700 rpm (see sec. 4.9.6). For all other conditions the percentage change in speed is somewhat less.

The compressors are suitable for continuous stable operation at any of the head and volume flow conditions included in shaded area "X" on Fig. 4.9.2 when operating with CO_2 at a mass flow of 41 000 lb/hr and at any of the head and volume flow conditions included in shaded area "Y" when operating with helium at a mass flow of 9190 lb/hr. The stated mass flow rates are obtained by varying the compressor speed, inlet temperature, and inlet pressure.

4.9.5. Operation with One and Two Compressors Inoperative

In the event one of the three series compressors fails, the remaining two compressors will be operated at increased speed to provide the original mass flow. A check valve connected in parallel with each compressor has been provided to materially reduce the added system resistance due to the inoperative compressor.

In the event a second compressor fails, the specifications require that the remaining compressor supply, without surging or stalling, at least 15% of the original mass flow for 48 hr. It is estimated that one compressor will actually supply over 60% of the original mass flow when operating at the speed required for two compressors to supply 100% flow.

4.9.6. Compressor Operating Limitations

At Operating Condition 2 with Three Compressors Operating. The revised loop pressure-drop estimate requires reducing the compressor speed from 2800 to 2700 rpm. This speed is below the specified range for the clutch and generator; but, for the load incurred at the reduced frequency of approximately 47 cps, sufficient cooling is available for both the clutch and generator to permit continuous operation.

The minimum continuous speed for safe bearing operation is estimated by the manufacturer to be approximately 2800 rpm. If this is substantiated by performance tests, it may be necessary to increase the system resistance to permit an increase in operating speed for operating condition 2 only.

At Operating Conditions 7 and 8 with Two Compressors Operating. With one of the three compressors inoperative at conditions 7 and 8

Table 4.9.2. Comparison of Total System Pressure Drop Indicated in Compressor Specification and Results of Revised Pressure-Drop Calculations

(Heater on Case)

	Operating Condition Number							
	1	2	3	4	5	6	7	8
Gas	CO_2	CO_2	CO_2	CO_2	He	He	He	He
Inlet pressure, psia	1000	1000	500	500	1000	1000	500	500
Inlet temperature, °F	550	900	550	900	550	900	550	900
Specified[a] pressure drop, psi	59.1	20.1	37.5	19.0	25.5	9.4	19.2	11.0
Revised estimate of pressure drop, psi	60.7	18.8	41.6	24.2	26.1	9.7	20.3	14.1
Change in pressure drop, %	+2.8	−6.5	+11	+27	+2	+3.1	+5.6	+28

[a]Dated February 1, 1960.

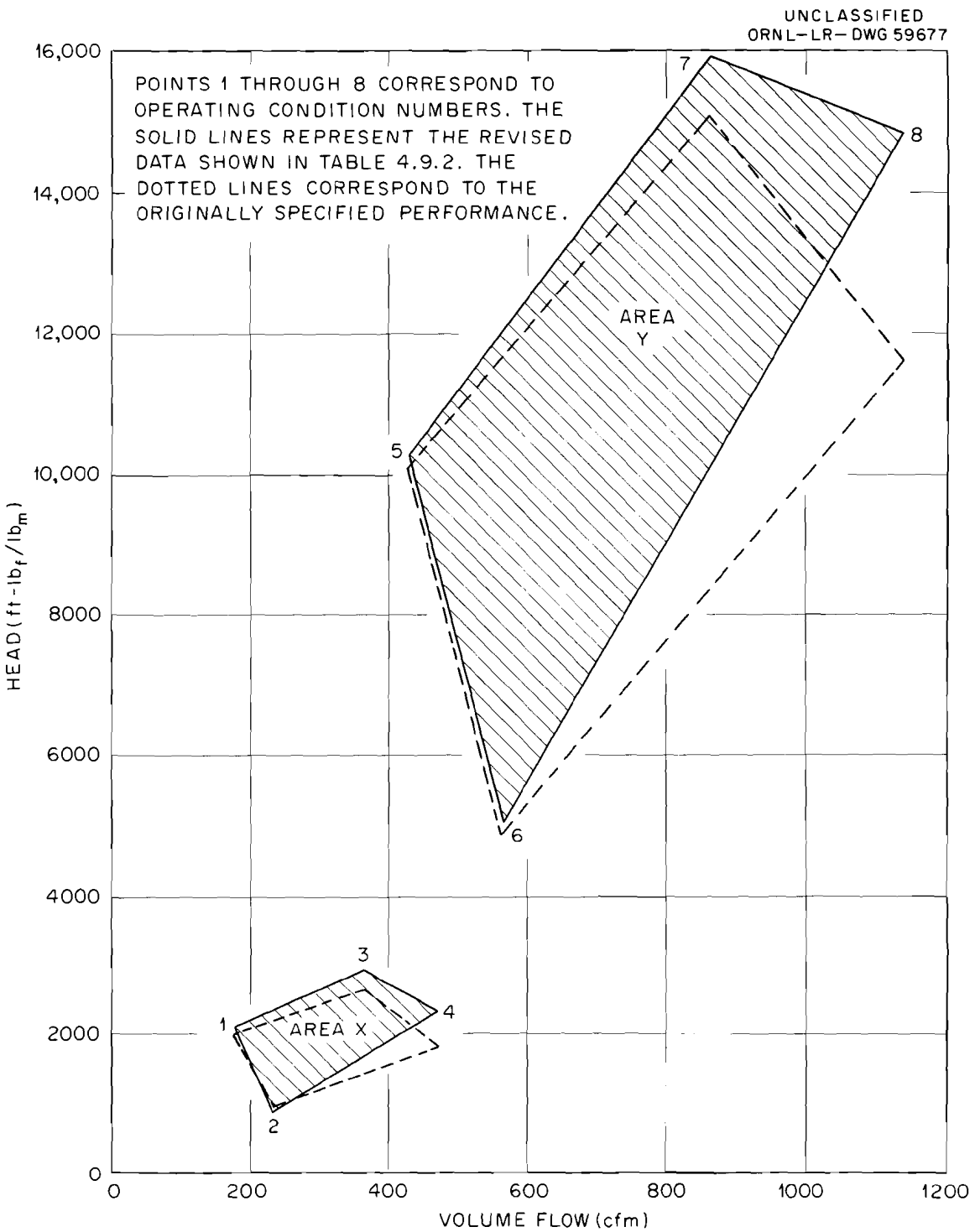

Fig. 4.9.2. Compressor Operating Areas for EGCR Experimental Loops.

the speed required to provide the original mass flow exceeds the maximum safe operating speed of 11 700 rpm as determined by the stress limitations of the motor rotor. On failure of one compressor at operating conditions 7 or 8 it is necessary to increase the compressor speed to a maximum of 11 700 rpm and to increase the loop pressure. According to the compressor manufacturer, increasing the loop pressure at a rate greater than 4 psi/sec could damage the thrust bearing and result in complete seizure of the rotary assembly. Check valves were installed in parallel with each compressor to minimize the amount of pressure increase required, and design provisions were made to limit the maximum rate of pressure rise. The normal compressor inlet pressure at operating conditions 7 and 8 is approximately 500 psia. The required inlet pressure at conditions 7 and 8 with two compressors operating with and without check valves is indicated in Table 4.9.3.

Table 4.9.3. Compressor Inlet Pressure Required with and Without a Check Valve Across Each Compressor Operating at 11 700 rpm

Operating Condition	Inlet Pressure Without Check Valve (psia)	Inlet Pressure with Check Valve (psia)
7	547	505
8	612	547

Other Operating Limitations. The operational ranges and limitations of each EGCR experimental loop compressor are indicated in Table 4.9.4.

4.9.7. Auxiliary Equipment Required to Protect Bearings

For gas-bearing operation, it is believed that the presence of a thin film of oxide on the bearing surfaces serves as a lubricant to permit starting and stopping without galling in most atmospheres. It is probable that in an atmosphere of helium containing less than 10 ppm of contaminants the oxide layer may be worn away during the initial starting and stopping and that difficulties with galling may be encountered on subsequent starts and stops. As a solution, Bristol Siddeley recommended that the rotating element be lifted off the bearings during starting and stopping by supplying loop gas to the bearings from an external source under high pressure. This is known as jacking. Although jacking is believed mandatory only when operating the loop on pure helium, jacking will also be used to extend bearing life when operating with CO_2. The time during which bearing jacking is applied must be kept to a minimum to prevent the introduction of excessive gas into the in-pile loop.

Table 4.9.4. Operational Ranges and Limitations of the EGCR Experimental Loop Compressors

Variable	Normal Operation	Range or Limits
Loop gas	Helium or CO_2	
Inlet pressure	500 to 1000 psia	Limited by motor horsepower
Inlet temperature	550 to 900°F	Room temperature to 900°F at 1000 psi
Speed	2800 to 11 700 rpm	2800[a] to 11 700[b] rpm
Voltage	72 to 300 v	
Frequency	47 to 200 cps	
Estimated continuous operation without maintenance	10 000 hr	
Bearing Operating temperature	150°F	
Operating temperature of motor winding		350°F maximum
Ambient pressure for bearing operation	500 to 1000 psia	14.7 to 1000 psia
Loop gas temperature for bearing operation	550 to 900°F	Room temperature to 900°F
Cooling water requirements		
Flow per compressor	4 gpm	
Inlet temperature	100°F	
Temperature rise	36°F	
Inlet pressure	40 psi	100 psi maximum
Pressure drop	<1.0 psi	

[a]Speed limited by minimum safe operating speed for gas bearings.

[b]Speed limited by safe motor rotor speed.

Because of the long coastdown period characteristic of the compressors during stopping, a method of electrically braking the compressor motor will be required.

The maximum estimated jacking supply flows and pressures and the increase in loop pressure if jacking is applied to one compressor for 1 min are indicated in Table 4.9.5. Application of jacking to all three compressors simultaneously would raise the loop pressure at condition 6 to 1111 psia after 1 min. The jacking period on stopping compressors is to be limited to 15 sec.

4.9.8. Factors That Could Contribute to Compressor Failure

Loss of Cooling Water. With electrical power still supplied to the compressor motor, it is estimated that the gas bearings will seize within 10 to 30 sec following a loss of cooling water. If the electrical power to the motor is interrupted at the time of the cooling-water failure, the compressor manufacturer estimates the motor stator will be permanently damaged in 5 min. With electrical power to the compressor interrupted but with cooling water remaining on and gas continuing to circulate in the loop at 900°F, the front bearing will approach a temperature of 350°F with no damage to the compressor.

Excessive Loop Gas Temperature, Pressure, or Fluctuations. The inlet gas temperature to the compressor must not exceed 900°F if excessive stresses in the compressor flange neck are to be avoided. The gas pressure in the loop must not exceed 1000 psia at 900°F. In order to prevent damage to the thrust bearing and possible seizure of the rotating assembly, the rate of change of loop gas pressure should not exceed 4 psi/sec during a gas pressure increase or 7 psi/sec during a decrease.

Gas Bearing Instabilities. The compressor must not operate below a minimum speed of approximately 2800 rpm or in the compressor surge region. Compressor surge may be attributed to high system resistance brought about by plugging of the mainstream piping or valve maladjustment. Mild surging and bearing damage may be caused by operating at flows less than approximately 50% of the design flow at operating condition number 1 or approximately 40% of the flow at condition 5.

Other Factors. Excessive loop piping reaction of the compressor casing may cause a pressure vessel failure. Bearing failure may be brought about by a failure to maintain proper compressor mounting attitude. Any change in attitude should be limited to a 3-deg minimum and a 5-deg maximum from shaft horizontal to maintain a positive gravity loading on the thrust bearing. Excessive vibration of the compressor base due to adjacent machinery could cause intermittent rubbing of bearing surfaces as a result of the extremely close running tolerances. The compressor manufacturer recommends that no measurable vibration be tolerated.

Table 4.9.5. Compressor Gas-Bearing Jacking-Gas Requirements

	Operating Condition Number							
	1	2	3	4	5	6	7	8
Jacking pressure, psia	1200	1200	600	600	1300	1300	700	700
Jacking flow, lb/min	5.9	5.9	2.5	2.5	1.5	1.5	0.56	0.56
Initial loop pressure, psia	1000	1000	500	500	1000	1000	500	500
Final loop pressure, psia	1011	1014	505	506	1030	1037	511	514

4.9.9. Project References

Design Analyses (CF 61-6-4)

Impeller Burst Speed and Containment of Fragments

Specifications (CF 61-6-5)

Helium/CO_2 Compressors for EGCR In-Pile Loops	JS-P3-88
Check Valves for EGCR Compressors	JS-128-130
200 Cycle Motor-Generator with 200 hp Motor and a 150 kva Generator for EGCR Loops	JS-28-104

4.10. Auxiliary Blower

The manufacturer of the loop compressors has stated that a loop depressurization rate greater than 7 psi/sec would result in the failure of the compressor thrust bearing.[14] A study of the loop depressurization problem verified that a 7 psi/sec rate is credible. To take care of this problem, it is necessary to provide an auxiliary blower which is capable of operating during and after a rapid loop depressurization. The auxiliary blower will substantially contribute to the removal of stored thermal energy and decay heat in the experimental fuel assembly following rapid loop depressurization or any other incident which makes inoperative all three loop compressors.

An analysis of natural convection in the loop shows that this heat removal mechanism is much more effective at high gas density than at low gas density (see project references). Therefore, the auxiliary blower size has been established from considerations of low-pressure operation. The blower wheel is sized to provide 2% of normal mass flow at the lowest anticipated gas density. The motor for the blower is sized to permit full-speed operation for a loop pressure of 200 psia or less for both helium and CO_2 at all anticipated temperatures. These considerations result in a 20-hp motor driving an 8-in.-diam centrifugal blower wheel at a maximum speed of 24 000 rpm. The over-all dimensions of the blower are approximately 20 in. in length and 20 in. in diameter.

Grease-lubricated ball bearings were selected for the auxiliary blower because they appear to give the greatest assurance of immunity to rapid depressurization, coupled with proven reliability for the short operating times required. The motor, bearings, and blower housing are water cooled (see sec. 5.6) to reduce blower temperatures. The entire blower assembly is housed in a vessel that is filled with loop gas and pressurized to loop pressure.

The auxiliary blower is installed in a line that is in parallel with the three series-connected loop compressors (see Fig. 1.3.1,

---

[14]Telegram, Bristol Siddeley to W. D. Gooch, June 16, 1960.

sec. 1.3). A check valve on the auxiliary blower intake line prevents reverse flow, which would bypass the experimental assembly, and yet permits the auxiliary blower to be at loop pressure, ready for instant use. Another check valve upstream of the mainstream gas filter prevents the auxiliary blower flow from bypassing the experimental assembly via the loop compressors when the latter have failed and the auxiliary blower is operating.

The auxiliary blower will start automatically when the loop volume flow rate drops to 40% less than normal. Power is supplied to the blower motor from a separate motor-generator set powered from either the X-10 or Y-12 line to the EGCR. The coupling between the motor and generator of this set is a torque limiter that prevents overload of the blower motor when the loop pressure is above 200 psia.

Project References

Design Analyses (CF 61-6-4)

Natural Convection in EGCR Experimental Loops

4.11. Mechanical Joints

Four mechanical pipe joints (6-in. sched-80 IPS) containing double metallic seals with a pressurized gas-buffered zone between the seals are provided in each primary loop piping system. These joints will facilitate the removal and replacement of the loop compressors and the mainstream gas filter. The buffer zone between the metallic seals is pressurized by the buffer gas system (see sec. 5.11). The buffer gas is of the same type as that in the experimental loop and is pressurized from 50 to 100 psi above the loop gas pressure. This feature provides positive assurance against leakage of radioactive loop gas into the experimenters' cell in the event of seal leakage.

Two single-seal mechanical joints (1-in. sched-40 IPS) are provided on each head of the transfer pump to facilitate removal and replacement of the heads. Gas buffering is omitted on these joints because (1) tests have demonstrated that small-size joints (2 1/2-in. IPS and below) are available that will remain extremely leaktight at operating temperatures up to 1000°F, (2) it is difficult to incorporate double seals in small-size (i.e., 1-in. IPS) mechanical joints, and (3) from the radiation hazards standpoint, secondary containment is provided by the experimenters' cell (this also applies in the case of the 6-in. joints with double seals), and any secondary system can be valved off in the event of an excessive leak without endangering the experiment.

After extensive screening tests of six commercially available all-metal seals, the Conoseal joint manufactured by the Marman Division of the Aeroquip Corporation was selected for the buffered-seal application. Both the Conoseal type of joint and the Grayloc joint, manufactured by the Gray Tool Company, were found to be suitable for the transfer pump application. Details of the test program leading to the selection of these mechanical joints are reported elsewhere.[15]

The Conoseal joint utilizes a conical type 321 stainless steel gasket installed as shown in Fig. 4.11.1. As the flanges are brought together the conical gasket is flattened. This causes the inside diameter of the gasket to decrease and the outside diameter to increase. This action established a circumferential line-contact seal between the edges of the gasket and the special lips on the flanges. Since the space provided for the gasket is smaller than the width of the gasket, a very large radial compression force is applied to the gasket when the joint is made up. The geometry is such that the gasket continues to exert a high sealing force per unit area even though the flange faces may separate because of relaxation of the clamping bolts. This type of sealing is shown in Fig. 4.11.2 applied to a double-seal gas-buffered joint. Photographs of single-gasketed and double-gasketed joints of this type are presented in Figs. 4.11.3 and 4.11.4.

The Grayloc pipe joint utilizes a seal ring with a T-shaped cross section. Since the angle of the top of the "T" is slightly different from the angle of the sealing surface of the flange, the top of the "T" is deflected when the flanges are clamped together so that the initial line contact progresses to surface contact. The primary sealing force is provided by the elastic energy of the seal ring. Internal pressure in the joint also acts to increase the sealing force. Since the leg of the "T" acts as a stop for the flanges, the quality of the seal is independent of the torque applied to the clamping bolts after contact is made between the face of the flanges and the seal ring. A standard 2 1/2-in.-IPS Grayloc joint is shown disassembled in Fig. 4.11.5.

The 6-in.-IPS double-seal Conoseal joint selected for the EGCR experimental loops was designed for a maximum internal gas temperature of 1050°F and a pressure of 1100 psig with 1200-psig pressure in the buffer zone. The design, manufacture, inspection, and testing of this joint are carried out in accordance with applicable sections of ASTM Standards, Part I, "Ferrous Metals," ASME Unfired Pressure Vessel Code, Section 8, and ASA Code for Pressure Piping B 31-1-1955. The specified maximum acceptable inner-seal helium leakage is 1×10^{-6} cm^3 (STP)/sec at design temperature and pressure. The specified maximum acceptable outer-seal leakage is 1×10^{-2} cm^3 (STP)/sec. The 6-in.-IPS joints are purchased in accordance with ORNL Job Specification JS-48-98.

---

[15]J. C. Amos and R. E. MacPherson, Interim Report – Mechanical Joint Evaluation Program, ORNL CF-60-9-77, Sept. 26, 1960.

UNCLASSIFIED
ORNL-LR-DWG 52447A

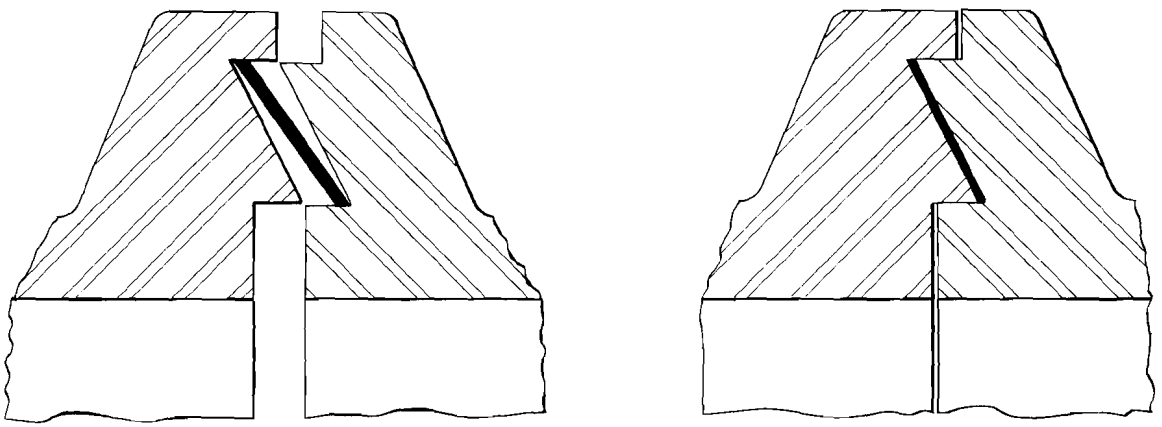

Fig. 4.11.1. Cross Section of Conoseal Gasket As Installed.

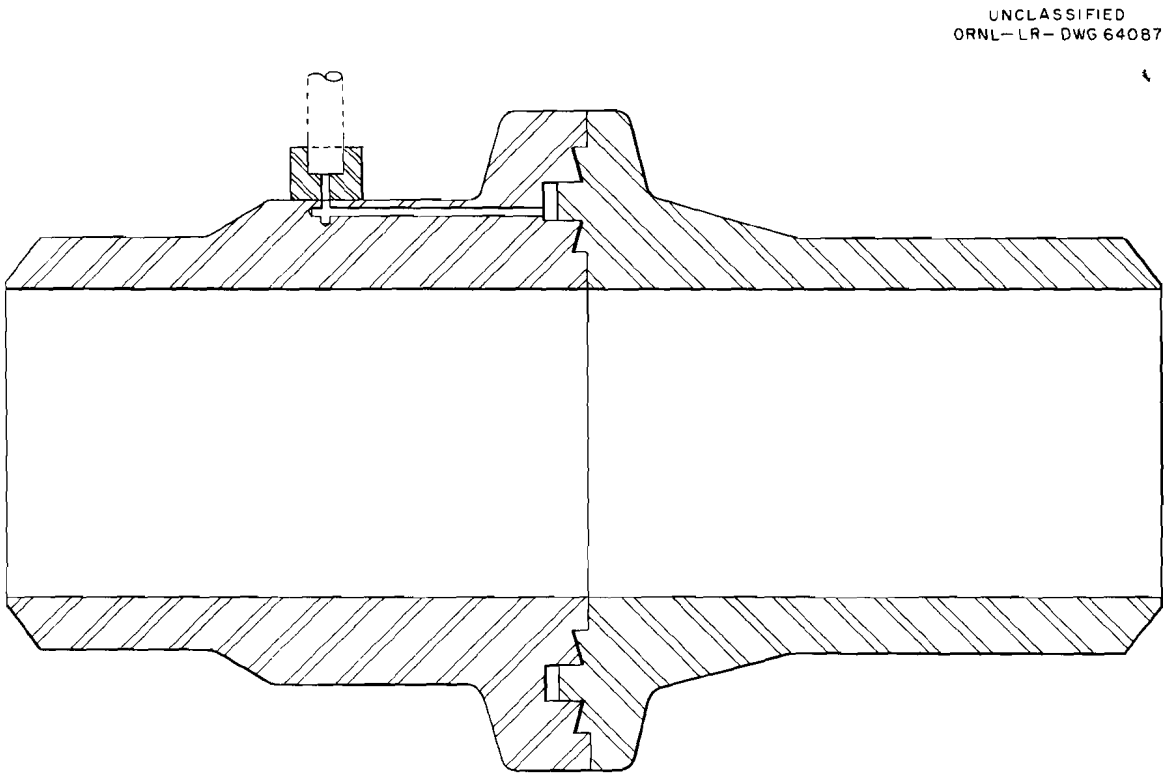

Fig. 4.11.2. Cross Section of Conoseal Double-Seal Gas-Buffered Mechanical Joint.

UNCLASSIFIED
PHOTO 35334

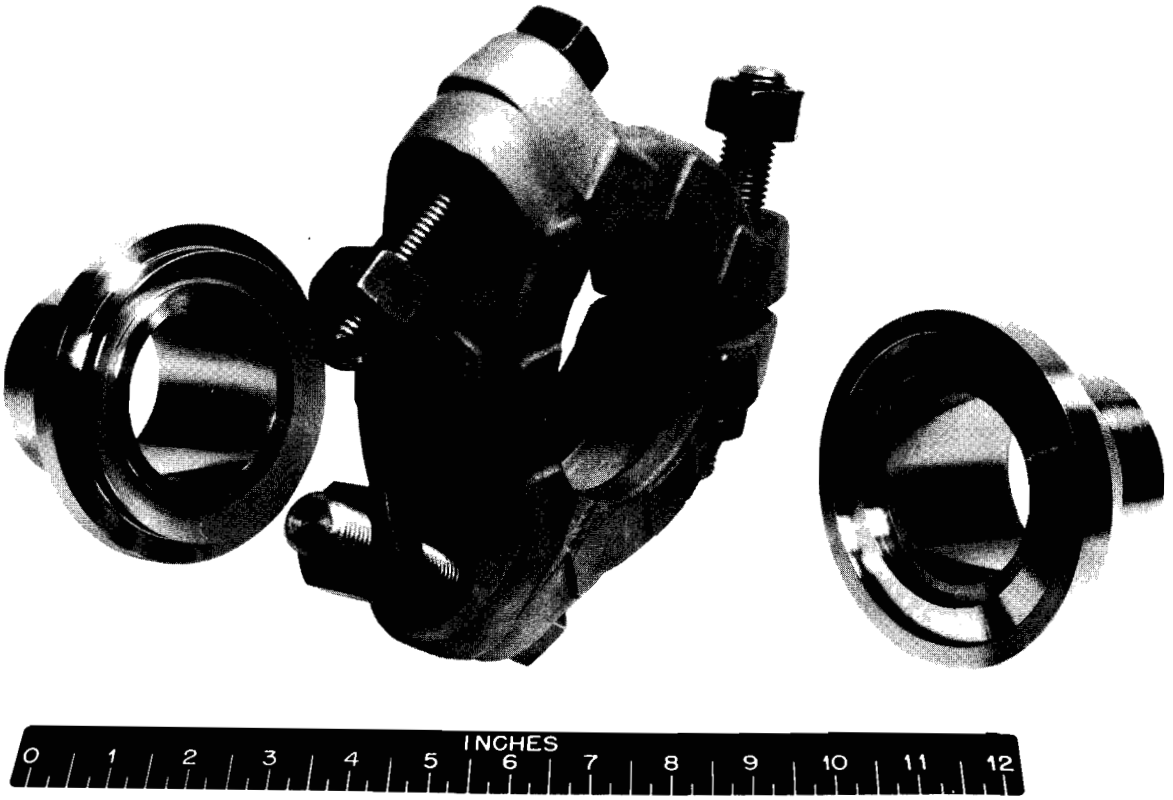

Fig. 4.11.3. Standard Conoseal Joint Disassembled.

UNCLASSIFIED
PHOTO 35762

Fig. 4.11.4. Double-Seal Gas-Buffered Conoseal Joint Disassembled.

UNCLASSIFIED
PHOTO 51639

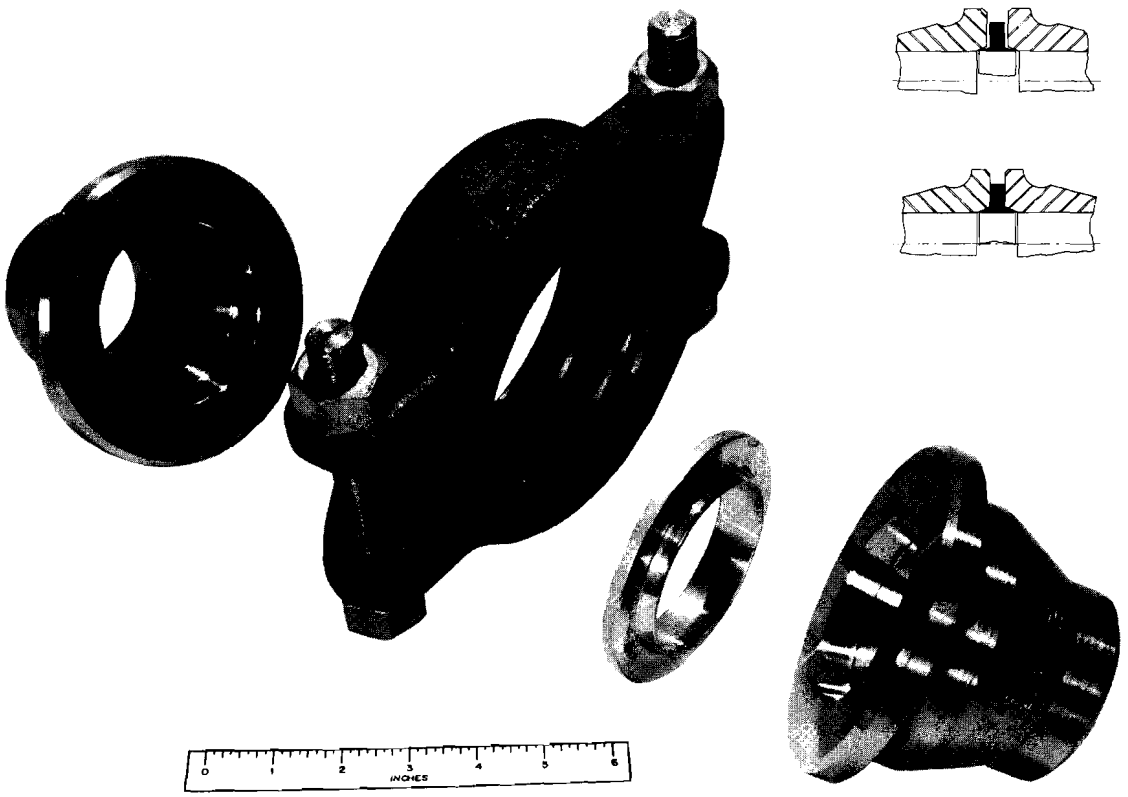

Fig. 4.11.5. Standard Grayloc Joint and Cross Section Showing Sealing Principle.

The reliability of 5-in.-IPS double-seal Conoseal joints was evaluated in a bending-moment test stand. The joints remained leaktight to within the specified acceptable limits during and after thermal cycling, mechanical load cycling, and pressure cycling at design temperatures and pressures of 700°F and 300 psig, respectively. Although the joints under test were not designed to meet the experimental loop operating conditions, one of the joints was thermally cycled between 200 and 1050°F at 1000 psig internal pressure for 50 cycles and remained leaktight to within the specified acceptable limits throughout this test. Reusability, interchangeability, and remote operation of these joints have also been demonstrated.

Remote maintenance may be necessary at some time during the useful life of the EGCR experimental loops. In view of this possibility, the problem of remote assembly and disassembly of the Conoseal joint has been studied to the extent of designing and operating a remotely controlled bolt runner and manipulating tool.

Proof tests of 2 1/2-in.-IPS Conoseal joints of the single-seal design have demonstrated that joints of this size and type will remain leaktight to within the specified acceptable limits during and after repeated thermal cycling, pressure cycling, and mechanical load cycling at operating temperatures up to 1300°F and pressures up to 300 psig.

Screening tests of 10-in.-IPS single-seal Conoseal joints have demonstrated the integrity of the seal for large-size joints for service at temperatures up to 1150°F. Although no problems are anticipated in the scale-up of the 5-in.-IPS double-seal Conoseal joint to the 6-in.-IPS size designed for EGCR loop conditions, a final proof-test of 6-in. prototype joints under all proposed operating conditions will be performed prior to installation of these units in the loops.

Since proof tests of 1/2- and 2 1/2-in.-IPS single-seal Conoseal and Grayloc joints have demonstrated the integrity of these joints for operating temperatures up to 1000°F, either design should be satisfactory for the 1-in.-IPS transfer pump application where the maximum operating temperature will not exceed 400°F. These smaller joints will be purchased in accordance with ORNL Job Specification JS-128-112.

Project References

Specifications

Buffered Mechanical Joints for Gas-Cooled Loops	JS-48-98
1-in.-IPS Mechanical Joint for Gas-Cooled Loops	JS-128-112

4.12. Valves

4.12.1. Mainstream Valves

Mainstream Isolation Valves. Each experimental loop requires eight hand-operated mainstream isolation valves. One set of valves, called the cell isolation valves, isolates the in-cell portion of the mainstream loop piping from the remaining portion inside the reactor containment vessel. Three other sets of valves are used to isolate the loop compressors, auxiliary blower, and mainstream gas filter, respectively. All isolation valves normally operate open.

The cell isolation valves are used to isolate the experimenters' cell when cell containment is not required (see sec. 6.1), when pressurization of the through-tube is desired while the in-cell portion of the loop is depressurized (see sec. 5.13), or when decontamination of the in-cell or out-of-cell piping is being performed. The isolation valves for the loop compressors, auxiliary blower, and mainstream gas filter are required to prevent decontaminating solutions from entering these components during decontamination of the in-cell piping.

All mainstream isolation valves are nominally 6 in. They are designed for 1100 psia at 975°F. Their maximum normal operation condition is 1000 psia at 950°F.

Filter Bypass Valve. The filter bypass valve is a motor-operated valve that is provided to protect the loop against loss of coolant flow due to a clogged mainstream gas filter (see sec. 4.7). This valve is normally operated closed.

Mainstream Check Valves. Each experimental loop requires five mainstream check valves. There is one 6-in. check valve bypassing each loop compressor. The function of this valve is to bypass the mainstream gas flow around the compressor if the compressor should fail. There is a 6-in. check valve on the intake to the auxiliary blower. This valve prevents reverse flow through the auxiliary blower, which would bypass the in-pile test section, and yet permits the blower to be at loop pressure, on the line, and ready for instant use. A 6-in. check valve upstream of the mainstream gas filter prevents reverse flow through the in-cell piping when the auxiliary blower is running. This flow would bypass the in-pile test section. All mainstream check valves are designed for operation at 1100 psia and 975°F.

Mainstream Pressure-Relief Valves. Pressure-relief devices are installed on the mainstream loop piping to provide overpressure protection. These pressure-relief devices are designed so that the loop conforms to the ASME Boiler and Pressure Vessel Code, Section VIII and applicable nuclear code cases.

Each section of the mainstream loop piping that can be isolated is protected from overpressure by a direct-acting pressure-relief valve. These valves discharge to the gas storage tanks (see sec. 5.3) and therefore must be back-pressure-compensated valves. Discharge to the storage tanks permits primary containment of all loop gas which is discharged or leaks across the valve seats. The gas storage tanks are pressure relieved to the experimenters' cell at 750 psia.

4.12.2. Auxiliary System Valves

Because of the number of valves in each loop auxiliary system, each system and its valve relationships must be examined as a composite unit. Therefore, the auxiliary system valves are discussed in their respective sections of this report.

4.12.3. Pressure Drop Across Valves

In order to minimize the total primary loop pressure drop, design emphasis was placed on using full-size valves with large flow coefficients. To this end, preference was given to globe, Y-globe, and ball valve designs. Pressure drop values for typical 6-in. valves of these types operating at the eight design conditions for the experimental loops are shown in Table 4.12.1. The selection of a valve for the final loop design will hinge on the outcome of valve tests and evaluations now being conducted.

4.12.4. Valve Design

Leakage. All mainstream valves were specified as being capable of satisfying the following leaktightness requirements before, during, and after 100 pressure-temperature cycles of the valve body between 0 psig at 70°F and 1000 psig at 1050°F, the valve being closed at the top of each cycle and opened at the bottom of each cycle:

1. Helium leakage from below the seat to above the seat will not exceed 12 cm^3 (STP)/hr at 300-psig pressure differential with the valve body at 1050°F and at 70°F.
2. Helium leakage from the process volume (valve open or closed) to the atmosphere or to an intermediate volume (for double-seal valves) will not exceed 1×10^{-6} cm^3 (STP)/sec at 1100 psig pressure differential with the valve body at 1050°F and at 70°F (a helium leak detector of the mass-spectrograph type will be used).
3. Helium leakage from below the seat to above the seat will be no greater than 150 cm^3 (STP)/hr for the pressure-relieving valves operating at 1000 psia and 80 to 120°F.

Table 4.12.1. Pressure Drop Across Gate, Globe, and Ball Valves for the EGCR Experimental Loop Operating Conditions

Operating Condition No.	Gas	Pressure (psia)	Temperature (°F)	Gas Density (lb/ft^3)	Flow Rate (lb/hr)	Pressure Drop (psi) Across Valve			
						Gate Valve	Venturi Gate Valve	Y Globe Valve	P-K Ball Valve
1	CO_2	1000	600	3.94	40 700	0.022	0.108	0.324	0.217
2	CO_2	1000	950	2.88	41 000	0.030	0.148	0.443	0.296
3	CO_2	500	600	1.97	41 300	0.045	0.222	0.665	0.443
4	CO_2	500	950	1.44	41 000	0.060	0.296	0.885	0.590
5	He	1000	600	0.350	9 190	0.012	0.059	0.178	0.118
6	He	1000	950	0.264	9 190	0.016	0.079	0.236	0.157
7	He	500	600	0.175	9 190	0.025	0.123	0.370	0.246
8	He	500	950	0.132	9 190	0.033	0.162	0.487	0.324

Corrosion, Erosion, and Abrasion. During normal loop operation no reactive gases will be circulated; hence, no difficulty is anticipated from corrosion. However, slightly corrosive solutions will be circulated through the loop piping during decontamination (see sec. 8.3). The valve body and trim materials are specified to be resistant to corrosion by these solutions. The valves will be designed and mounted in the system in such a manner that no pockets or crevices will exist wherein the decontaminating fluids can accumulate.

The characteristic high accoustical velocity of helium (3300 ft/sec at room temperature) may create problems in valves and other equipment because of inherent vibrations. The vibrations generated in a helium gas stream are of high frequency and may be damaging.

The mainstream valves cannot tolerate particulate contamination in the loop gas. At high velocities entrained particles become small missiles and rapidly degrade surfaces against which they impinge. Where possible the primary loop components are designed to minimize their vulnerability to erosive action by removing the critical surfaces from the flow path. The mainstream valves will be designed to have the gas flow channeled in a manner which minimizes impingement and sudden changes in flow direction.

Materials. Many solid substances, including some types of glass, are permeable to pressurized helium. Consequently, special attention will be given to the valve sealing and the valve body designs. Castings will not be permitted for the valve bodies because of their porosity.

The valve body and nozzles will be made of type 347 stainless steel conforming to the requirements of the American Standard Code for Pressure Piping, ASA B 31-1-1955 and ASA B31.3 - 1959, Petroleum Refinery Piping. The valve trim and other internal components will be compatible with the service requirements, i.e., resistant to abrasion and erosion and to corrosion by the decontaminant solutions.

Nozzles. The valve nozzles will conform to the dimensions for standard 6-in. sched.-80 pipe. The nozzles will be long enough to permit welding to the mainstream piping without damaging or distorting the valve body and seat. The open end of each nozzle will be machined to a 37 1/2-deg bevel and 1/16-in. land.

4.12.5. Valve Maintenance

Continuous reliable functioning of each valve will be essential to the success of the experimental loop program. Therefore each valve will be specified to be designed to operate over a continuous period of 8500 hr without requiring maintenance or access to any part of the valve, including the operator. The possible necessity of maintenance by semiremote methods was given consideration in the experimenters' cell piping layout.

4.12.6. Project References

Design Criteria (CF 61-6-3)	
Criteria for Mainstream Pressure Relief Devices	Code B.4.2
Design Analyses (CF 61-6-4)	
Pressure Relief Valves	
Specifications (CF 61-6-5)	
Gas Valves for Nuclear Service	JS-70-97

4.13. Reflective Insulation

4.13.1. General

The design requirements of the EGCR experimental loops indicated the need for insulating material that would give a low heat loss at high loop pressure and high temperature. The insulation must exhibit good structural integrity and be capable of operating in contact with the loop or reactor gas without contaminating the loop system or the reactor system, respectively. Metallic-foil reflective-type insulation was selected for this application.

The insulation development program that was originally initiated to develop insulation for the ORR No. 1 helium-cooled loop[16] was expanded to include the insulation problems of the EGCR loops. This program was later further expanded by a contract with Orenda Engines, Ltd., to carry out experiments that defined the thermal performance of the most promising insulation geometry as a function of gas temperature, pressure, temperature gradients, and type of gas. Tests were conducted at temperatures up to 1000°F, pressures up to 1000 psi, and temperature gradients to 900°F using helium and carbon dioxide.[17-19]

---

[16]R. B. Knight and R. E. Helms, Determination of Suitable Insulation for a 15/16 Helium Filled Annulus in the ORR Helium In-Pile Loop Design No. 4, ORNL CF-59-8-57, August 17, 1959.

[17]R. E. MacPherson, Jr., and H. D. Stuart, The Performance of Metallic Foil Insulation in Vertical Gas Spaces (Paper for Publication in American Nuclear Society Journal).

[18]Reactor Pressure Tube Insulation Studies, Report on Gas Space Insulation Tests, Orenda Engines Ltd., Nuclear-15, January 1960.

[19]Test on Gas Space Reflective Insulation, Parts I and II, Orenda Engines Ltd., Nuclear-30, November 1960.

The experimental loop design requires a secondary containment pipe around the primary loop piping (see sec. 6.1). Without insulation between the primary and secondary piping, the secondary piping will operate at very high temperatures. Using insulation between the primary and secondary piping lowers the temperature of the secondary piping and thus permits the use of carbon steel rather than stainless steel pipe.

Since the loop gas inlet temperature to the reactor core may be greater than the reactor gas inlet temperature, and since the through-tube must pass through a bottom nozzle of the reactor pressure vessel, insulation between the loop gas and the bottom nozzle is required to reduce the temperature of the nozzle and heat loss from the loop. The bottom nozzle and the reactor pressure vessel are fabricated from carbon steel and designed for operation at 650°F (see sec. 4.2). Reflective insulation is also used in the lower chase piping, the through-tube, and the mainstream gas cooler.

4.13.2. Design and Development

The basic geometry and method of fabricating the test insulation used at Orenda are shown in Figs. 4.13.1 and 4.13.2, and a schematic of the test rig is shown in Fig. 4.13.3. The results of the Orenda test of free-convection and conduction in the open gas annulus between adjacent sheets of reflective insulation spaced 0.27 in. apart are presented in Fig. 4.13.4. The tests were conducted for operation with both helium and CO_2. The gas properties included in the correlations were density (ρ), viscosity (μ), specific heat (C_p), and thermal conductivity (k). It may be seen that there is excellent agreement between the experimental results and the existing correlations of McAdams,[20] Kraussold,[21] and Grigull[22] as to the range of Grashof (N_{Gr})-Prandtl (N_{Pr}) number over which the modified Nusselt number (Nu) [apparent conductivity (K_{app})/gas conductivity (k)] can be taken as equal to unity. This correlation is extremely useful in choosing foil spacing to allow approximate analytical determination of the insulation effectiveness on the basis of radiation and gas and metal conduction only. Departures from this ideal situation can occur to a greater or lesser extent based on the particular insulation geometry under consideration. Insertion of spacers between foil layers provides a direct metal conduction path across the gas gaps and leads to an increase in the effective thermal conductivity. Continuous spiral wrapping of foil layers can lead to spiral convection paths, the effect of which is hard to predict analytically. Vent holes in the

---

[20] W. H. McAdams, Heat Transmission, 3rd. Edition, p. 181, McGraw-Hill, New York, 1954.

[21] H. Kraussold, p. 331 in High Pressure Technology by Comings, McGraw-Hill, New York, 1959.

[22] U. Grigull, Die Grundgesetze der Warmeubertragun, p. 282, Springer Verlag Berlin, 1955.

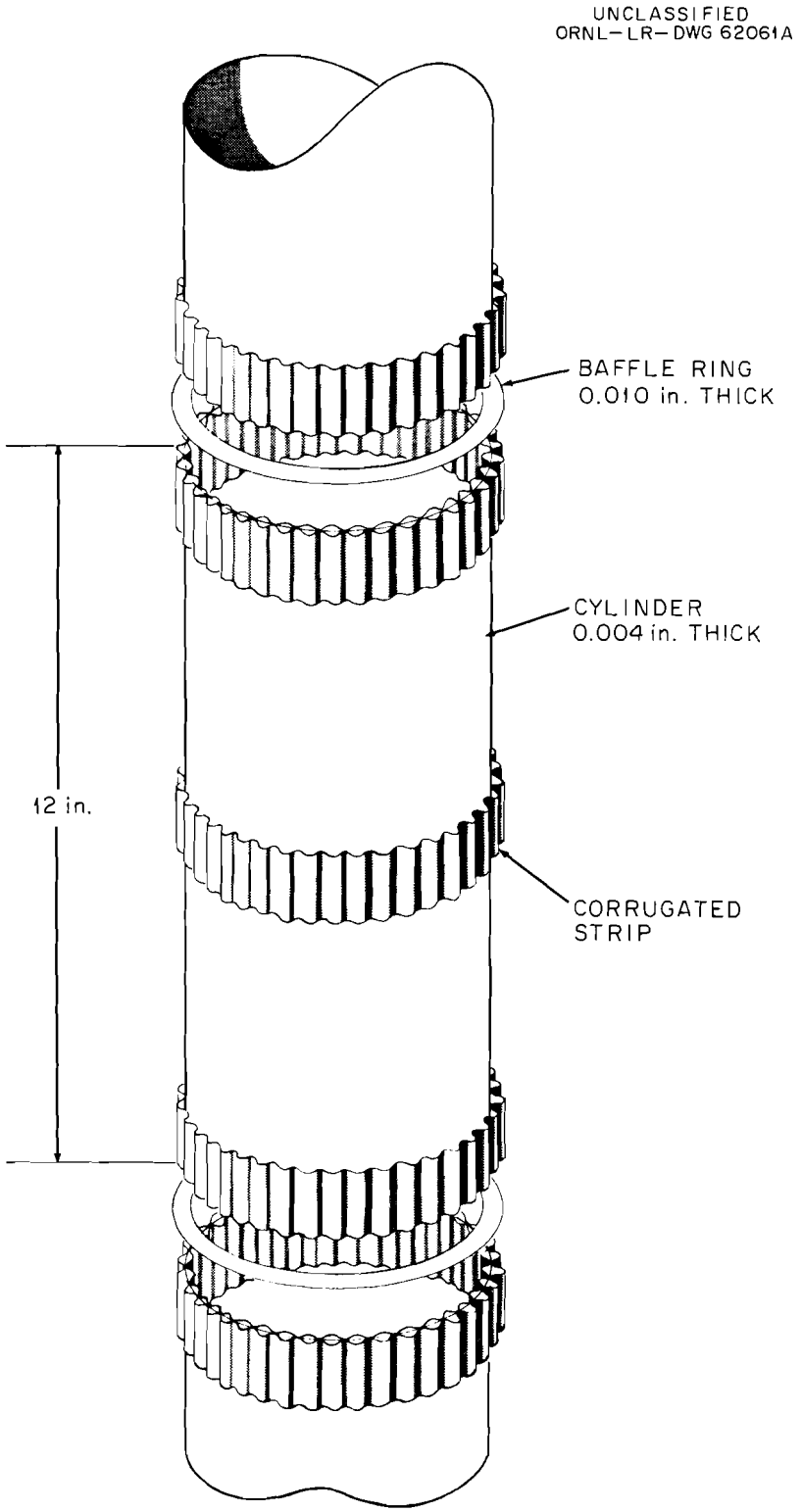

Fig. 4.13.1. Insulation Spacers.

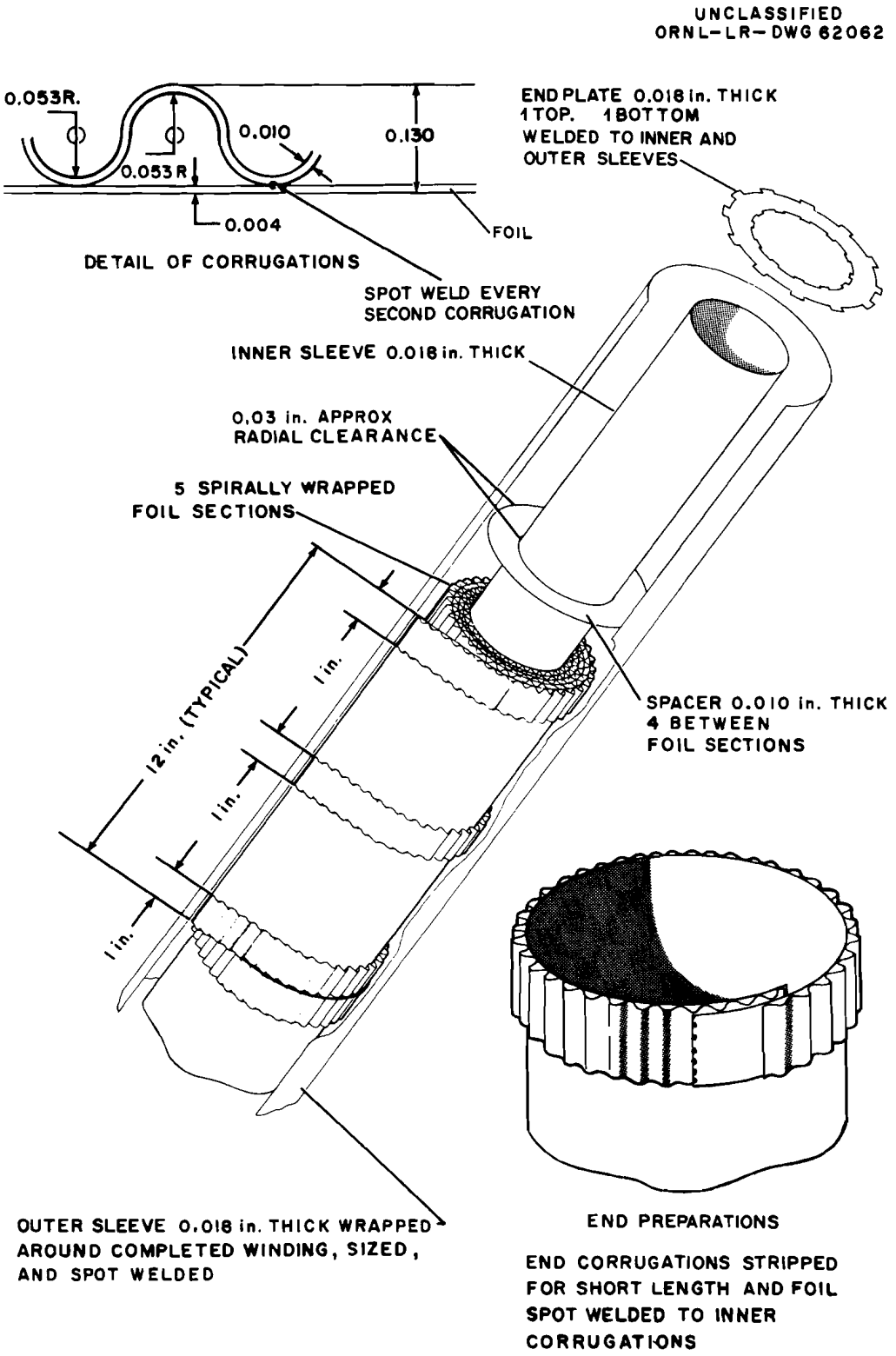

Fig. 4.13.2. Insulation Assembly Procedure and Details.

UNCLASSIFIED
ORNL-LR-DWG 62063

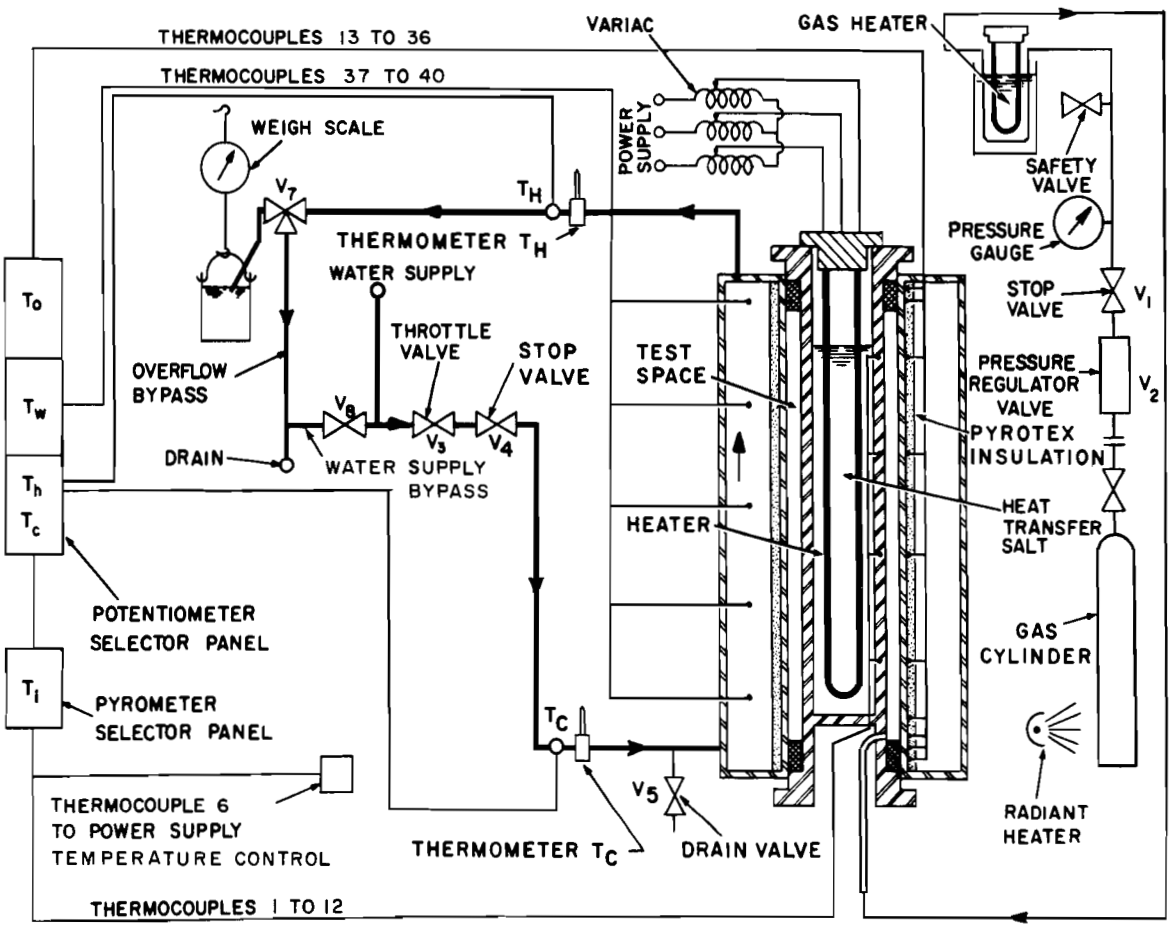

Fig. 4.13.3. Schematic Diagram of Test Rig Used at Orenda Engines, Ltd.

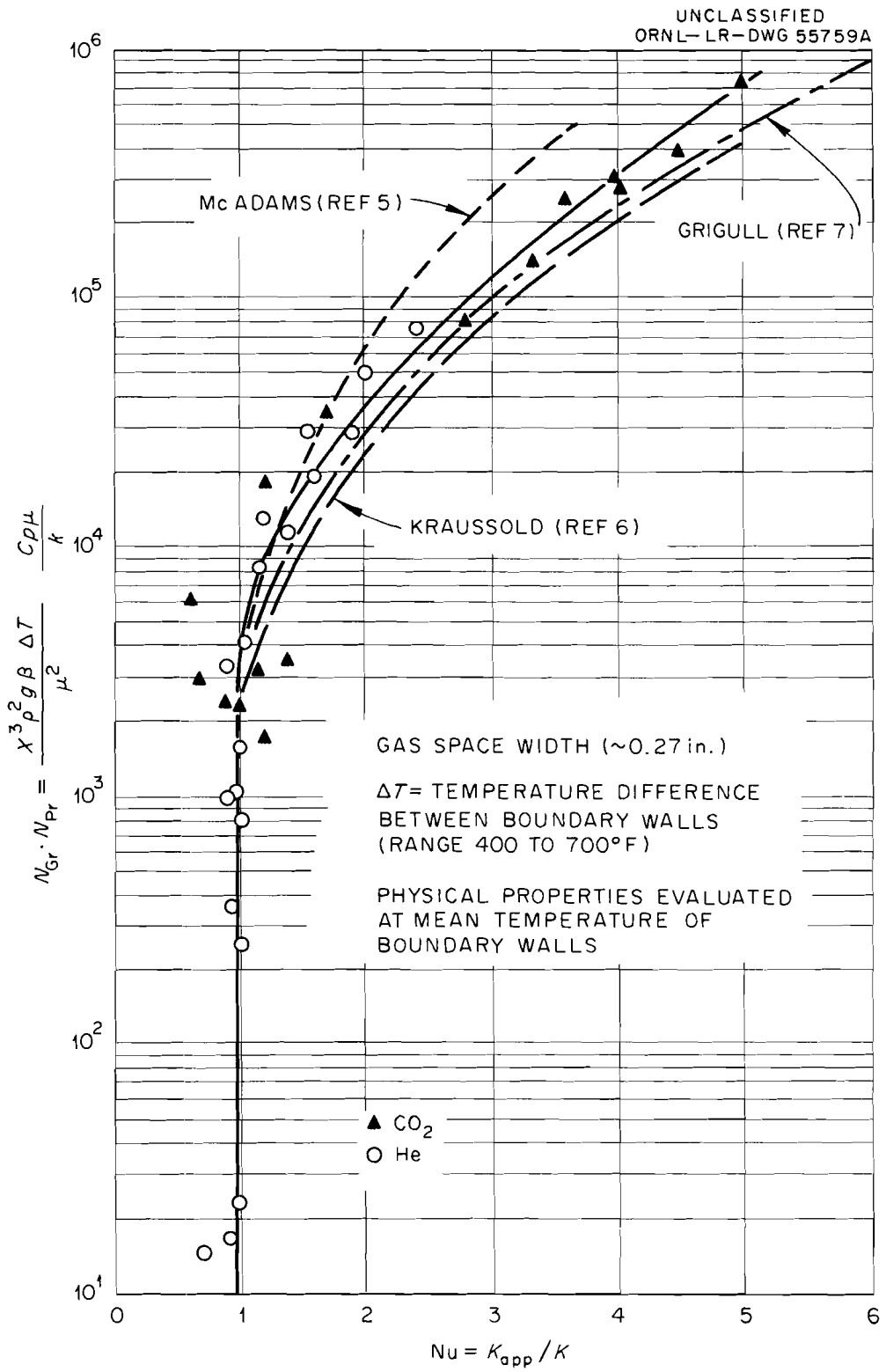

Fig. 4.13.4. Grashof-Prandtl Number vs Modified Nusselt Number.

insulation can and will act as short-circuit convection paths between hotter and colder annuli and may result in increased effective conductivity.

The results of Orenda tests on concentric polished sleeves (configuration II of Orenda's report[19]) are presented in Fig. 4.13.5. Since radiation heat transfer can be predicted for this case with a reasonable degree of reliability and the gas spaces were sufficiently narrow (0.050 in.) to suppress natural-convection effects, the heat transfer by conduction across the individual metal sleeve and gas gaps could be examined. The net effective conductivity of the gas gap obtained by calculating out of the total thermal conductivity the effect of radiant heat transfer and metal conduction is also shown in Fig. 4.13.5. This procedure should result in a determination of the thermal conductivity of the test gas for the prevailing average operating condition. In this respect this test served as a calibration of the test facility and test procedures. The results presented in Fig. 4.13.5 are approximately 10% below literature values[23] for helium at the appropriate temperature levels. The CO_2 values check well with the literature values[24] at low pressure, but because of the generally higher Grashof-Prandtl numbers, thermal-convection effects are encountered as the pressure is increased.

The effects of pressure and thickness on the gross effective thermal conductivity of the 1/8-in. corrugation-spaced foil assemblies of 1/4 to 1 1/2 in. thickness (configuration IV, V, VI, and VII corresponding to Orenda's report[19]) in an atmosphere of helium or CO_2 are given in Figs. 4.13.6 and 4.13.7. These data are being used as the design data for the heat transfer calculations for determining the insulation thicknesses required for the various pipes and components that require reflective insulation.

The test program has provided considerable insight into the performance of metallic reflective insulation. It has shown that natural convection can be suppressed by controlling the gap width for a gas when the Grashof-Prandtl number between adjacent foils is below 3000, as shown on Fig. 4.13.4. Thus a particular insulation geometry can be approximated by analytical techniques.

All the test data were obtained for insulation in the vertical position; however, vertical insulation values used in the horizontal position would be on the conservative side. With the test data available, insulation of the reflective metallic type can be designed to meet the requirements of the EGCR helium and CO_2 experimental loops.

---

[23]J. Hilsenrath and Y. S. Touloukian, Trans. ASME, Vol. 76, pp. 967–85, 1954.

[24]Tables of Thermal Properties of Gases, National Bureau of Standards, Circular 564, 1955.

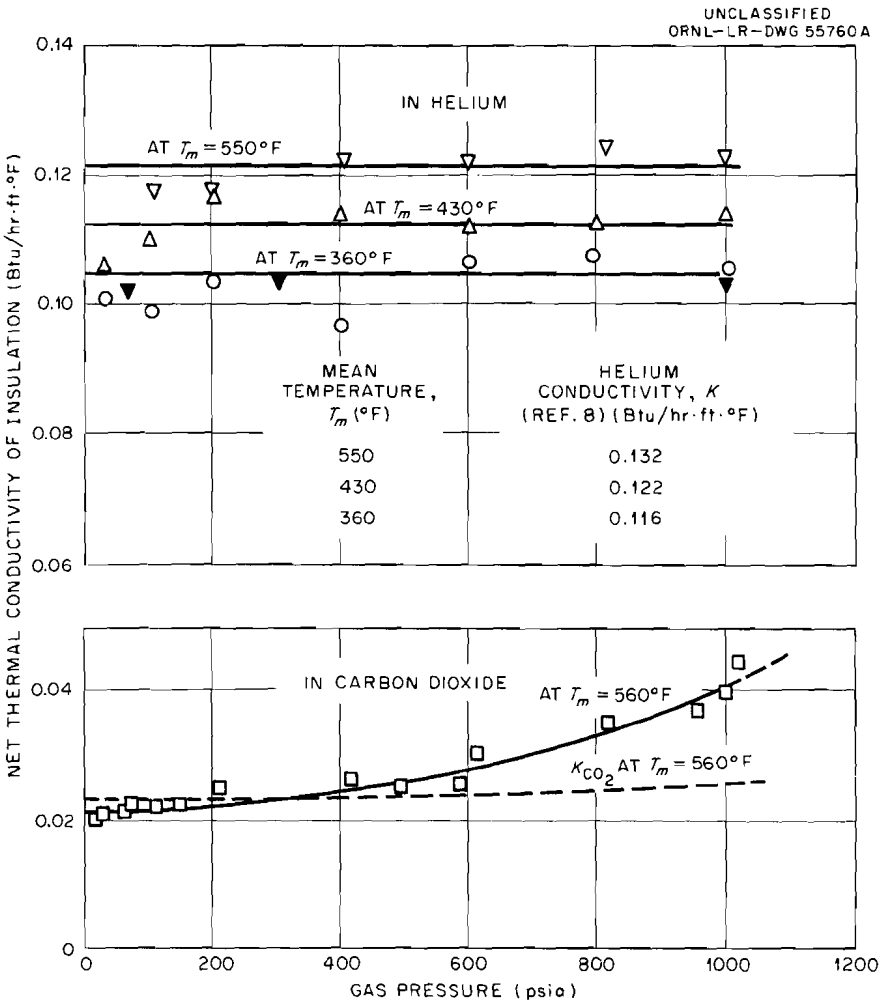

Fig. 4.13.5. Comparison of the Conductivity of Insulation in the Test Configuration with the Conductivity of the Test Gases.

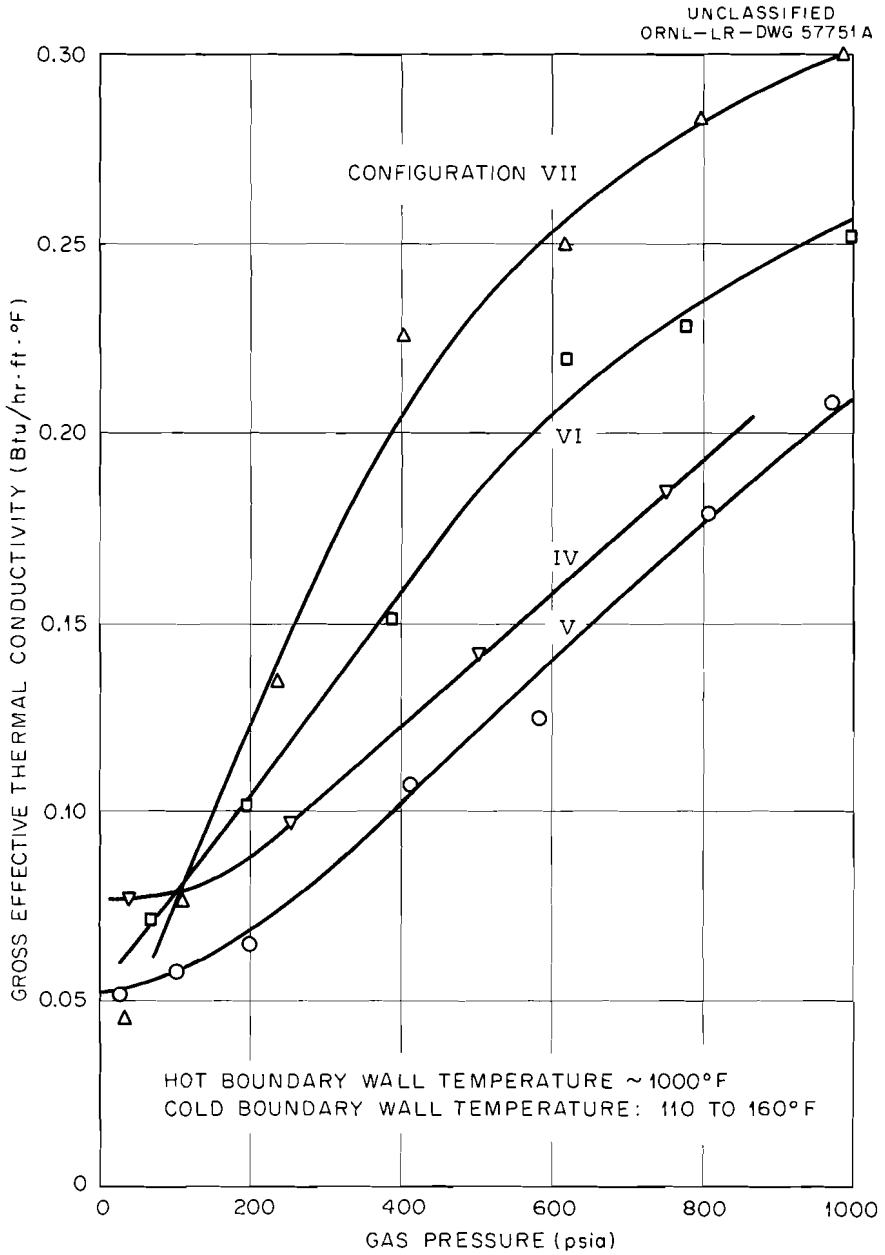

Fig. 4.13.6. Gross Effective Thermal Conductivity of Insulation in a CO_2 Atmosphere.

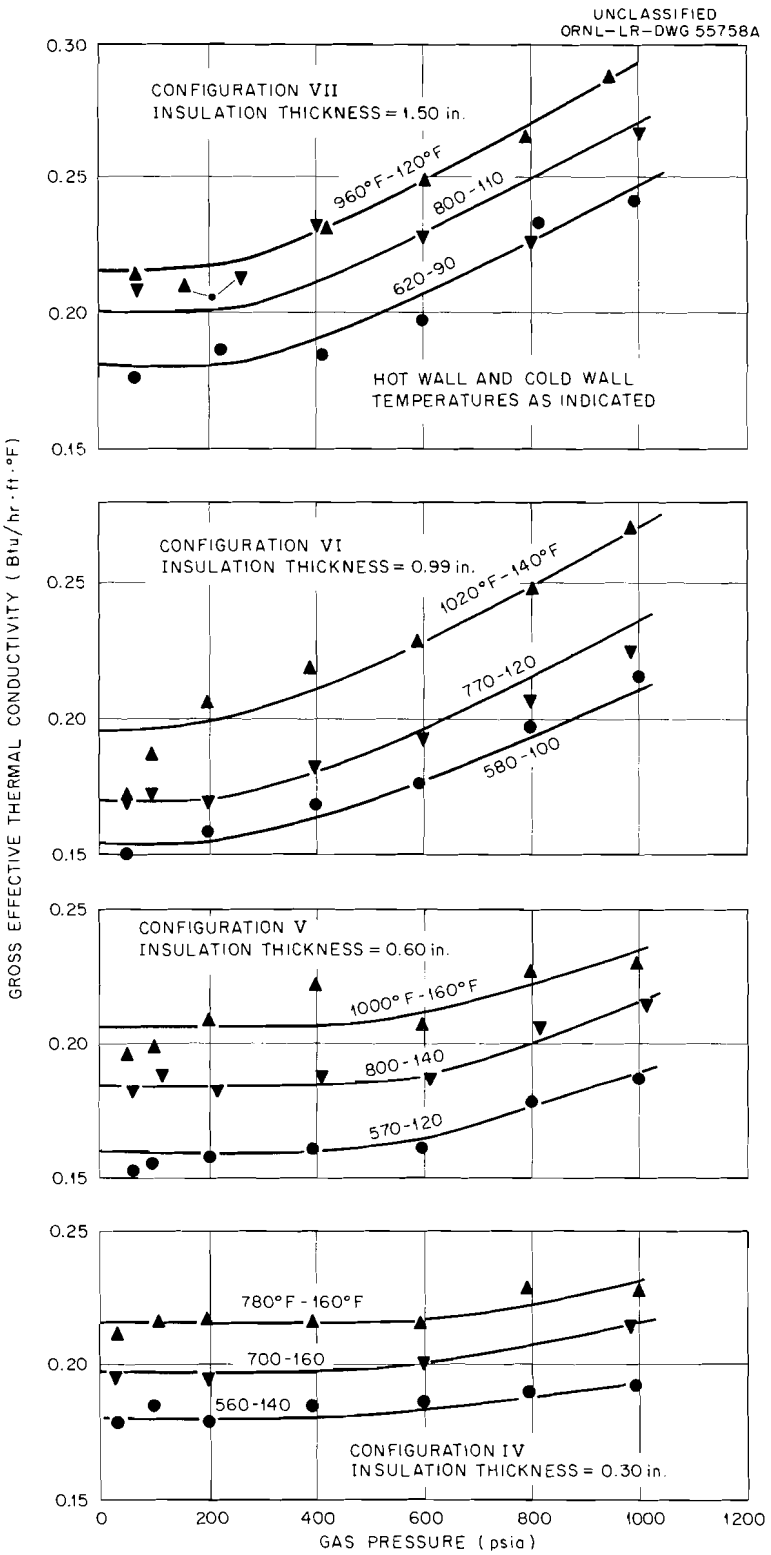

Fig. 4.13.7. Gross Conductivity of Insulation Configuration vs Helium Pressure for Various Hot and Cold Wall Temperatures.

Project References

Preliminary Design Drawings (CF 61-6-2)

Weldment – Insulation Can, Bottom Nozzle Tee Section E-RD-10243

4.14. Top Dummy Shield Plug Assemblies

It will be necessary to insert shield plugs into the through-tube top nozzles to maintain the integrity of the reactor biological shield. These shield plugs will sufficiently reduce the streaming of neutrons and gamma rays through the reactor biological shield via the nozzles to permit access to the service machine room during loop operation.

During the period of reactor operation prior to installation of the through-tubes, temporary dummy shield plugs will be installed in the top nozzles. After installation of the through-tubes, another type of dummy shield plug that will not restrict loop gas flow through the branch of the top tee will be inserted when the experimental stringer is removed. This plug will permit an unobstructed flow of loop gas through the branch of the top tee for cooling the uninstrumented experimental assembly which remains in the lower part of the loop through-tube, even though the instrumented experimental assembly (experimental stringer) has been removed. Since the shielding requirements for the top plugs to be used before and after installation of the through-tubes are not the same, two different designs are required for the 9 1/2-in. through-tube plugs and two for the 5 1/2-in. through-tube plugs.

Prior to through-tube installation, the dummy shield plug assembly will consist of a 10-ft-long section of high-density concrete (KE-EGCR-Spec. SC-2) in a carbon steel container which is open at the top and is shaped to slip inside the top nozzle. Where possible, the materials of the shield plug container will be limited to readily obtainable pipe, tubing, and fittings. The shield plug will be attached directly to the Bridgman closure by a split ring. The Bridgman closure will not be required to support the weight of the shield plug. For the 5 1/2-in. through-tube, the shield plug (ORNL-Dwg-E-RD-10424) will be supported by adding a shoulder to the top nozzle inner tee section (ORNL-Dwg-E-RD-10244). The shield plug will be supported off this shoulder by means of lugs attached to the shield plug container approximately 2 ft from the top of the container. For the 9 1/2-in. through-tube, the shield plug (ORNL-Dwg-E-RD-10284) will be supported by a shoulder in the top nozzle adjacent to the upper end of the through-tube. A shoulder will be included on the shield plug container to rest on the top nozzle shoulder. In each case, any differential thermal expansion between the shield plug and the top nozzle will be taken up at the split ring which attaches the shield plug to the Bridgman closure.

After installation of the experimental loops and through-tubes, a shorter shield plug will be required for insertion in the top nozzle when an experimental stringer is removed. This shield plug must terminate above the branch of the top nozzle tee to insure unobstructed loop gas flow around the loop. The design of this shield plug will not be completed until shielding data are obtained from the 10-ft-long temporary shield plug.

Project References

Design Criteria (CF 61-6-3)

Criteria for Top Dummy Shield Plug Assemblies	Code D.2.2

Design Analyses (CF 61-6-4)

Top Dummy Shield Plug Assemblies

Preliminary Design Drawings (CF 61-6-2)

Temporary Top Shield Plug Assembly and Details	E-RD-10424

5. AUXILIARY SYSTEMS AND EQUIPMENT DESIGN

5.1. Introduction

The gas required for operation of the EGCR experimental loops is provided by the helium supply system and the CO_2 supply system, both of which are located within an extension to the experimenters' crane bay. Gas from these supply systems is piped to the experimenters' utility tunnel, where it is distributed by the gas distribution system to the individual cells for the purposes of filling the loops, pressurizing the through-tubes, filling the gas storage tanks, and supplying buffer gas. The gas distribution system is connected to the buffer gas system, the through-tube pressurizer and loop fill system, and the gas transfer and storage system.

The through-tube pressurizer and loop fill system is used to keep pressure in the through-tube when the loop is shut down but the reactor is operating, to fill the loop directly from the gas supply tanks, and to pressurize the in-cell loop piping during leak checking. The principal function of the gas transfer and storage system is to remove the mainstream gas from the experimental loop and store it for future use. The buffer gas system is used during loop operation to indicate whether the total leakage through all mechanical joints is excessive and after loop shutdown to indicate which mechanical joint (or joints) is leaking excessively.

Each experimental loop is equipped with a gas-sampling system to obtain information on fission-product release, deposition of activity, and techniques for activity-level control. Each loop also has a gas purification system consisting of a charcoal bed and U-tube cooler for removal of a portion of the fission products released to the loop gas. This system is capable of removing 99.9% of the radioiodine entering the bed. A loop offgas system is provided for each loop to permit safe discharge to the atmosphere of any portion of the loop gas. This system consists of a liquid trap, a vacuum pump, and filters.

Leakage through either the experimental loop primary or secondary containment within the reactor containment vessel is detected by means of a sniffer gas system. This system utilizes air at a pressure slightly greater than atmospheric in the containment volume between the primary and secondary containment vessels. Leakage into or from this containment volume is detected by a change in the air pressure.

The main pieces of handling and storage equipment for experimental assemblies are the service machine for installation and removal of assemblies, storage holes for the storage of irradiated experimental assemblies, a fuel carrier for shipment of fuel assemblies to the reprocessing or examination facility, and the spent fuel transfer mechanism by

which fuel may be carried to the fuel storage basin. An experimental assembly removal cooling system is required to provide cooling of the experimental assembly while it is in transit from the through-tube into the service machine and while it is contained within the service machine.

The water systems for the experimental loops consist of a demineralized water system and a service (river) water system. The service water is used primarily to cool the demineralized water. The demineralized water is used in all loop gas-to-water heat exchangers except the helium supply cooler (containing nonradioactive gas) and the storage holes (temporary, until demineralized water becomes available).

The peak air requirement of 400 scfm of instrument air and 200 scfm of plant air are supplied by the plant and instrument air system. Instrument air is used in the experimenters' control room, the utility tunnel, the crane bay, and inside the reactor containment vessel. Plant air is used in the experimenters' cell, utility tunnel, and crane bay.

The experimental facilities are provided with a normal electrical power system and an emergency power supply. Communications, including a commercial telephone, private line stations, and a public address system are provided, as well as fire and evacuation alarms.

5.2. Bypass Gas-Cleanup System

5.2.1. Function

The function of the bypass gas-cleanup system is to remove a fraction of those fission products which are released to the mainstream gas by the loop experiment. The bypass gas-cleanup system consists of a gas cooler and a charcoal trap which removes more than 99.9% of the iodine in the bypass stream. The charcoal trap also removes a large fraction of other fission products present in the gas. One of the purposes of the bypass gas-cleanup system is to determine what fraction of the mixed fission products in the loop gas can be removed by the charcoal bed. No attempt is made to remove the noble gas fission products.

Provisions are made for a number of entry points into the bypass gas-cleanup system to permit the addition of other gas purification equipment desired by the experimenter.

5.2.2. Equipment Description

Gas Cooler. The gas cooler is a U-tube heat exchanger consisting of two concentric pipes, as shown in Fig. 5.2.1. The inner pipe is 1-in. sched.-40 Inconel and the outer pipe is 1 1/2-in. sched.-40 carbon steel (ASTM-A53-Grade B). The cooled length of the heat exchanger is

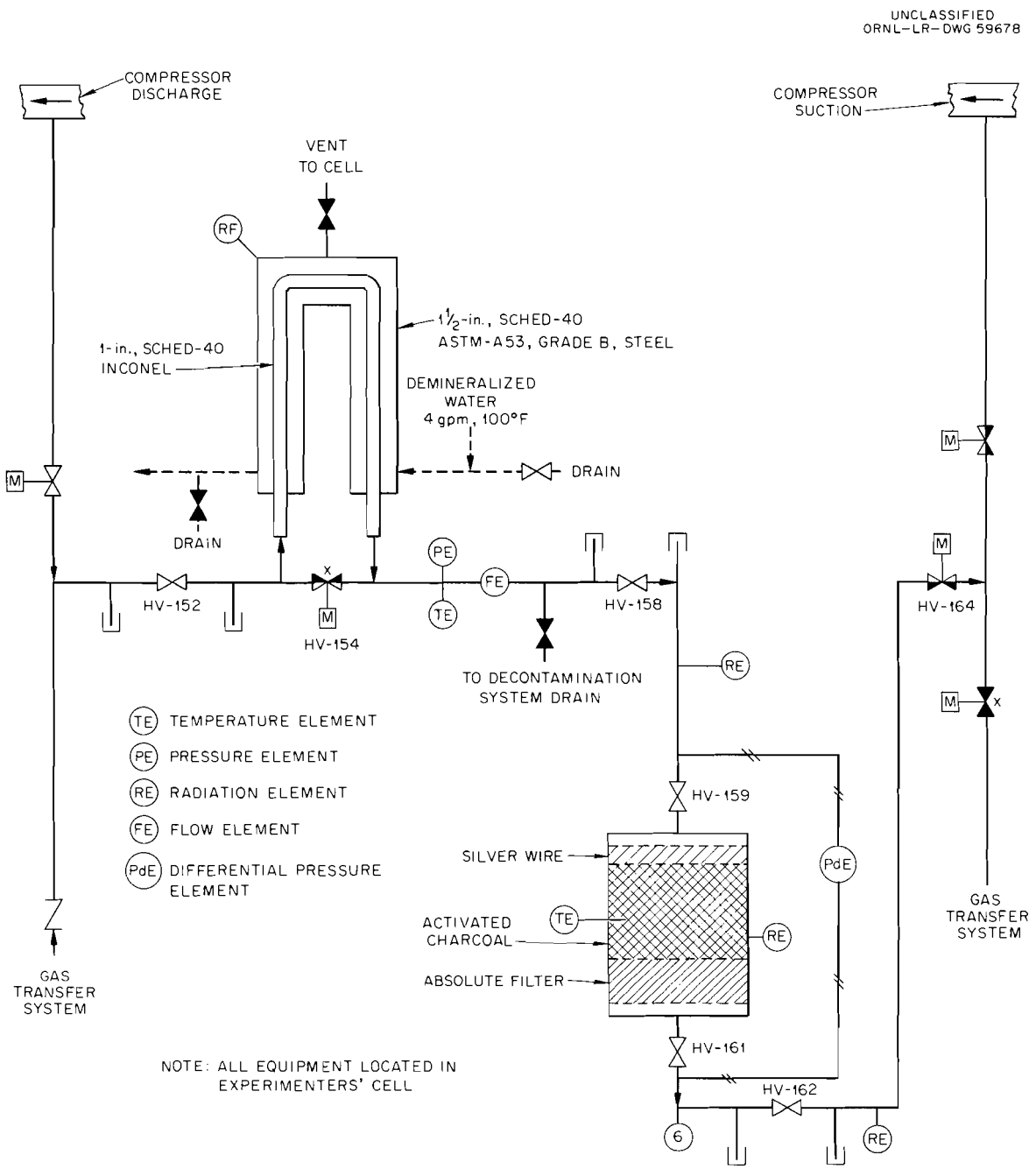

Fig. 5.2.1. Bypass Gas-Cleanup System.

approximately 25 ft. The gas cooler is designed to cool 92 lb/hr of helium or 420 lb/hr of CO_2 from 900 to 200°F. The heat is removed from the gas by a 4-gpm flow of demineralized water (100°F inlet and 120 to 140°F outlet). The gas bypass valve (HV-154) permits adjustment of the exit gas temperature. The gas side of the cooler is designed for a pressure of 1100 psia at 975°F. It will be hydrostatically tested at 3428 psia and 70 to 100°F. The water side is designed for a pressure of 250 psig at 200°F.

Charcoal Trap. The charcoal trap consists of a lead-shielded type 347H stainless steel vessel containing metallic silver, an activated charcoal bed, and an absolute filter. The metallic silver removes the halogen fission products at elevated temperatures. The activated charcoal removes the halogens and various other fission products at lower temperatures. The absolute filter removes any particulate matter released by the charcoal bed. When the bypass gas is helium at 200°F, this trap will remove at least 99.9% of the iodine which enters the trap. Krypton and xenon are held in the charcoal bed for the calculated decay times shown in Table 5.2.1, which are based on work reported by Browning, Adams, and Ackley.[1] If the bypass stream is helium at elevated temperatures (>200°F), the noble gas holdup will decrease. When the bypass gas is CO_2 at a given temperature, the holdup time is less than for helium at the same temperature.

[1]W. E. Browning, R. E. Adams, and R. D. Ackley, Removal of Fission Product Gases from Reactor Off-Gas Streams by Adsorption, CF-59-6-47 (June 11, 1959).

Table 5.2.1. Noble Gas Retention in the Charcoal Bed of the Bypass Gas-Cleanup System

(Helium Case)

Nominal Conditions at Gas Cooler Exit		Retention Times (min)	
Pressure (psia)	Temperature (°F)	Krypton	Xenon
500	200	1.3	11.5
1000	200	2.6	23

The charcoal bed is 14 in. in diameter and 14 in. deep. The metallic silver in the charcoal bed is pure silver wire (about 1/4 lb) placed in the charcoal. The charcoal is 8 to 14 mesh PBL-activated charcoal. Prior to installation in the trap, the charcoal is sieved to remove fines and is outgassed by exposure to a once-through helium gas flow at 900°F and 8 ft/min. The after-filter is an absolute type of filter that is capable of operation at high temperatures. This filter is 99.9% efficient for particle sizes greater than 0.3 μ. The charcoal bed is designed for a pressure of 1100 psia at 975°F. It is shielded by a lead radiation shield whose minimum thickness is 4 in.

Piping. The bypass gas-cleanup system piping contains a number of valves (HV-152, HV-158, and HV-162) and capped tees. These valves and tees permit additional purification equipment to be added to the system as required by the experimenters. The piping is designed for a pressure of 1100 psia at 975°F. All piping that contains high-temperature gas is insulated to reduce the cell heat load.

5.2.3. Operating Conditions

The nominal flow conditions and gas temperatures for the gas cooler are shown in Table 5.2.2.

The nominal flow rate of the bypass gas-cleanup system is 1% of the mainstream gas flow rate. The maximum flow rate through the system is limited to 5% of the mainstream gas flow rate so that the flow rate in the in-pile test section is not unduly reduced. The loop gas flow through the system is controlled by a throttling valve (HV-164). Valves HV-159 and HV-161 are isolation valves which are required when the charcoal bed is removed.

Table 5.2.2. Nominal Gas Cooler Flow and Temperature Conditions for the Bypass Gas-Cleanup System

Gas	Pressure (psia)	Bypass Gas Flow Rate (lb/hr)	Gas Cooler Temperatures (°F)	
			Inlet	Outlet
He	1000	92	600	170
	1000	92	900	200
	500	92	600	170
	500	92	900	200
CO_2	1000	420	600	170
	1000	420	900	200
	500	420	600	170
	500	420	900	200

5.2.4. Project References

Design Criteria (CF 61-6-3)	
Design Criteria for the Loop Purification System	
Part I: Fission Product Removal	Code B.5.0
Design Analyses (CF 61-6-4)	
Loop Purification System	
Preliminary Design Drawings (CF 61-6-2)	
Carbon Trap Assembly	E-RD-10297
Instrument Diagram, Gas Transfer, Storage, and Purification Systems	Q-2120-5

5.3. Gas Transfer and Storage System

5.3.1. Function

The primary function of the gas transfer and storage system is to remove the mainstream gas from the experimental loop and store it for future use. The system used to accomplish this is shown in Fig. 5.3.1. The essential elements of this system are the transfer pump, gas storage tanks, and associated piping and valves.

5.3.2. Equipment Description

Transfer Pump. The gas-transfer pump is a positive displacement type of pump with a metallic-diaphragm head. It is sized to transfer 300 lb of CO_2 or 28 lb of helium from the gas storage tanks to the experimental loop in 5 hr. If an additional assurance of continuity of operation is desired, a second transfer pump may be installed in parallel in a location already provided in the experimenters' cell.

The transfer pump head is provided with triple diaphragms to assure maximum safety: a gas-side diaphragm, a central diaphragm, and an oil-side diaphragm. Three diaphragms are required to present a possible injection of pump oil into the loop in case of diaphragm rupture. The gas-side diaphragm and head are so contoured that the maximum diaphragm stress is less than 20 000 psi. The diaphragm is seal-welded to the head. The central diaphragm is provided with radial grooves so that any leakage from the gas or oil side is vented to a leakage monitor and detected. The gas- and oil-side diaphragms are made of type 347 stainless steel, as are all head surfaces which come in contact with the process gas.

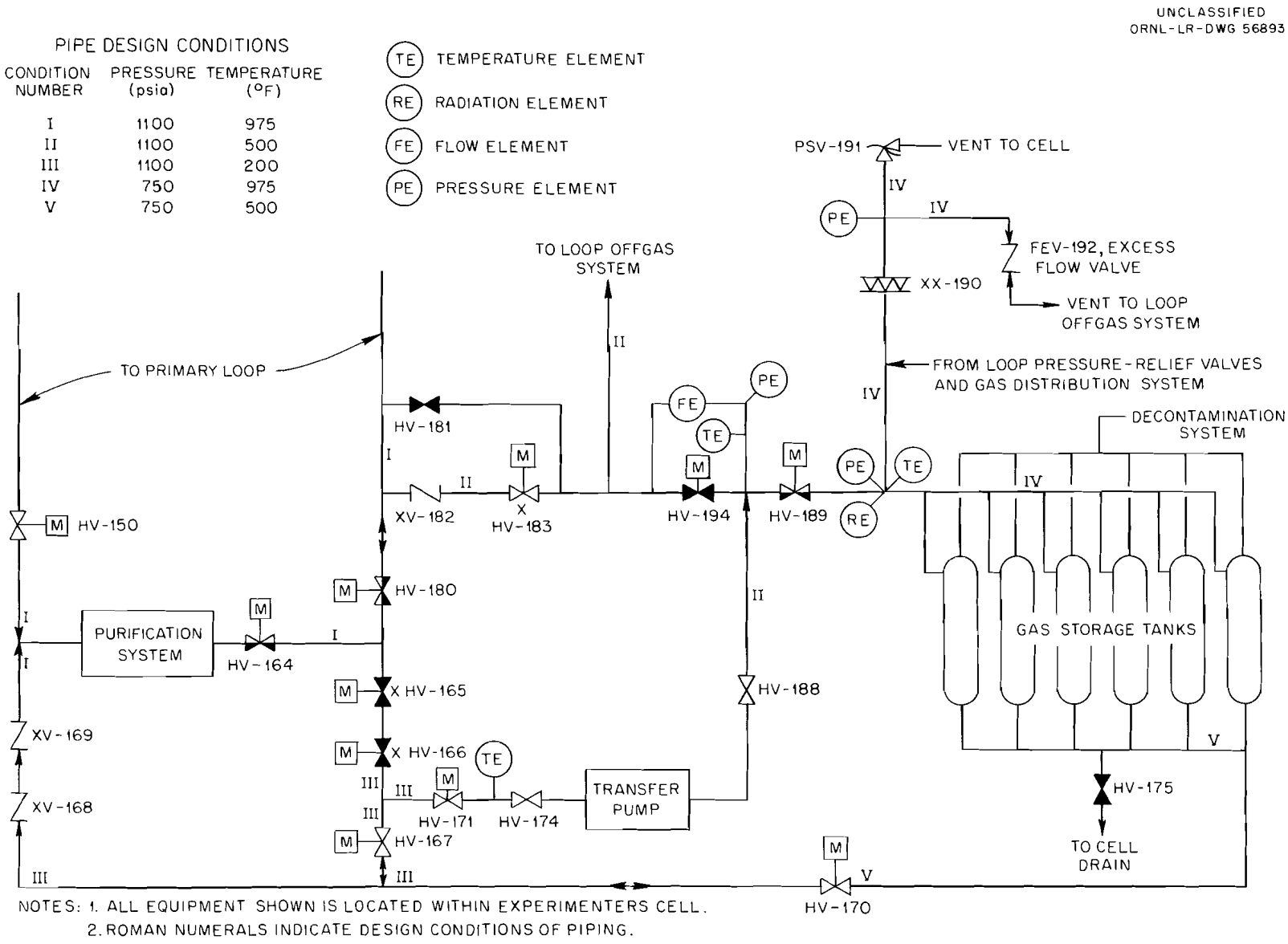

Fig. 5.3.1. Gas Transfer and Storage System.

All portions of the pump that are exposed to the process gas are designed to withstand a static pressure of 1200 psig at 200°F. The gas temperature at the pump suction is continuously monitored. An alarm at the experimenters' control panel warns of over temperature.

A mechanical joint is installed on the inlet and discharge of each pump head to facilitate the installation and removal of the head without removing the prime mover. These joints (1-in. sched.-40 pipe) are designed to contain helium at a maximum temperature of 400°F and a maximum pressure of 1200 psig (see sec. 4.11). The helium leakage rate from each joint is specified to be less than 1×10^{-6} scc/sec (see sec. 4.11).

The transfer-pump drive motor is designed and fabricated in accordance with NEMA publication No. MG-1-1959. It is a squirrel-cage induction motor that is totally enclosed and fan-cooled and is designed for operation on 480-v, 3-phase, 60-cycle power. It has halogen-free NEMA class H insulation (115°C maximum temperature rise for ambient air at 40°C). Across-the-line starting is used. The motor should be capable of reliable operation for a period of ten years in a radiation field of 20 rads/hr. The transfer-pump motor is sized to operate without exceeding the nameplate full-load rating at all process conditions, even though it is capable of continuous operation at 115% of the nameplate rating without exceeding the temperature limits of the insulation.

Gas Storage Tanks. Each experimenters' cell contains six gas storage tanks connected by two common headers to give a combined volume of about 200 ft^3. Each storage tank is 12 1/3 ft long and 24 in. in outside diameter and is fabricated from 11/16-in.-wall type 304H stainless steel. Each tank is designed for a maximum allowable working pressure of 750 psia at 900°F and will be hydrostatically tested to 1510 psi at 100°F. A parasol-type spray nozzle is located inside the top head of each tank for spraying with decontamination solutions.

Both the top and bottom storage tank headers are 2-in. stainless steel pipe (sched. 40, type 304H). The bottom header contains a 2-in. drain valve (HV-175) to permit draining the tanks during decontamination. The top header contains pressure-, temperature-, and radiation-monitoring elements. The top header also contains a rupture disk (XX-190) and a pressure relief valve (PSV-191) set to relieve the pressure at 750 psia. The pressure relief valve is of the balanced-bellows type that permits large variations in the back pressure with little or no change in the relieving pressure and capacity. The space between the rupture disk and the pressure-relief valve is vented to the loop offgas system (see sec. 5.14) by an excess-flow valve (FeV-192).

Pipe and Valves. The gas transfer and storage system piping is shown schematically in Fig. 5.3.1. All valves other than the check and pressure relief valves are bellows sealed. The specified maximum allowable leakage from each valve to the surrounding atmosphere is 1×10^{-6} scc/sec, as determined by a helium leakage test at design pressure (see sec. 4.12).

The EGCR experimental loops have been designed to minimize the number of points at which high-pressure loop gas can leave the mainstream piping. The number of such points has been limited to three. Each of these points is double valved to reduce the probability of partial loop depressurization as a result of operator error. One such point occurs at check valves XV-168 and XV-169. These valves permit gas flow only into the mainstream loop piping. A second point at which gas can leave the mainstream piping is at valves HV-165 and HV-166. These two valves are spring loaded to fail in a closed position. The third point is at valves HV-181, HV-182, and HV-183. When the loop is in operation, valve HV-181 is locked and tagged in the closed position, and valve HV-183 remains closed and is backed by valve HV-182 to check the flow if it is accidently opened. Whenever the experimental loop is emptied and ready for evacuation, valve HV-181 is opened so that the system can be evacuated through a 2-in. pipe.

All system piping that is normally in contact with the mainstream loop gas during loop operation at power is type 347H stainless steel. This piping is designed for 1100 psia at 975°F. The remaining system piping is type 304H stainless steel.

5.3.3. System Operation

The temperatures and pressures in the gas transfer and storage system corresponding to the eight experimental loop design conditions described in Section 1.3 are given in Table 5.3.1. Also given are the temperatures and pressures during special operations such as loop blowdown or repressurization.

Operation with Experimental Loop at Power. During normal experimental loop operation at power, the functions of the gas transfer and storage system are to provide makeup gas to the loop and to provide a containment volume for the loop pressure relief valve discharge.

Makeup of gas which leaks from the mainstream loop piping to the experimenters' cell or to the gas storage tanks is provided by the gas transfer pump. This pump compresses the gas from the gas storage tanks to loop pressure. To provide this makeup gas flow, valves HV-170, HV-167, HV-171, and HV-189 are opened and the transfer pump is started. Valve HV-183 is then opened and valve HV-189 is throttled until the desired flow of gas into the loop is obtained (as indicated by flow element FE-185). A check valve (XV-182) prevents depressurization of the mainstream loop piping if the transfer pump or a valve should fail. If needed, new gas may be added to the gas storage tanks from the gas distribution system (see sec. 5.10).

Loop Shutdown and Depressurization. In order to remove an experimental fuel assembly, the mainstream loop piping must be cooled to less than 150°F and the pressure decreased slowly to 300 psia or less because

Table 5.3.1. Gas Transfer and Storage System Temperatures and Pressures During Normal and Special Operations

Based on loop volume of 149.9 ft^3

Operating Condition	Design Condition Number							
	1	2	3	4	5	6	7	8
	During Normal Loop Operation							
Loop conditions								
Primary coolant	CO_2	CO_2	CO_2	CO_2	He	He	He	He
Power, Mw	1.5	0.335	1.5	0.335	1.5	0.335	1.5	0.335
Pressure, psia	1000	1000	500	500	1000	1000	500	500
Average temperature, °F	628	931	628	931	643	952	643	952
Heater (on or off)	on	on	on	on	on	on	on	on
Mass of coolant in loop, lb	567.9	438.9	286	219	50.4	39.6	25.2	19.8
Gas storage tanks								
Pressure, psia	30	30	30	30	30	30	30	30
Temperature, °F	100	100	100	100	100	100	100	100
Mass of gas in tanks, lb	43.6	43.6	43.6	43.6	4.0	4.0	4.0	4.0
	During Loop Blowdown							
After shutdown and loop cooling to 150°F								
Pressure, psia	561	439	280	219	553	432	276	216
After equalizing pressures in loop and tanks								
Temperature, °F	150	150	150	150	146	146	143	141
Pressure, psia	247	197	135	108	253	205	134	110
Gas remaining in loop, lb	262	207	141	112	23.3	18.7	12.6	10.2

Table 5.3.1 (continued)

Operating Condition	Design Condition Number							
	1	2	3	4	5	6	7	8
				During Loop Blowdown				
After pumping gas from loop into tanks								
Mass pumped, lb	246	191	125	96.6	22.1	17.5	11.4	9.0
Final loop conditions								
Pressure, psia	14.7	14.7	14.7	14.7	14.7	14.7	14.7	14.7
Temperature, °F	100	100	100	100	100	100	100	100
Remaining gas, lb	15.9	15.9	15.9	15.9	1.2	1.2	1.2	1.2
Final storage tank conditions								
Pressure, psia	406	323	222	176	444	353	233	188
Temperature, °F	150	150	150	150	150	150	150	150
Gas in tanks, lb	595.6	466.6	313.7	246.7	53.2	42.4	28.0	22.6
				During Loop Repressurization				
Initial storage tank conditions								
Pressure, psia	373	363	204	161.5	407	324	214	173
Temperature, °F	100	100	100	100	100	100	100	100
Gas in tanks, lb	595.6	466.6	313.7	246.7	53.2	42.4	28.0	22.6
Initial loop conditions								
Pressure, psia	0	0	0	0	0	0	0	0
Temperature, °F	100	100	100	100	100	100	100	100

Table 5.3.1 (continued)

Operating Condition	Design Condition Number							
	1	2	3	4	5	6	7	8
	During Loop Repressurization							
After equalizing pressures in loop and tanks								
Temperature, °F	100	100	100	100	100	100	100	100
Pressure, psia	219	172	118	93	232	185	122.4	98.9
Gas in loop, lb	255	199.7	134.4	105.8	22.8	18.2	12.0	9.7
After pumping gas from tanks into loop								
Mass pumped, lb	312.9	239.2	151.6	113.2	27.6	21.4	13.2	10.1
Final loop conditions								
Pressure, psia	469.5	367.5	244.3	188.7	508	397	254	198
Temperature, °F	100	100	100	100	100	100	100	100
Gas in loop, lb	567.9	438.9	286	219	50.4	39.6	25.2	19.8
Final tank conditions								
Pressure, psia	19.1	19.1	19.1	19.1	21	21	21	21
Temperature, °F	100	100	100	100	100	100	100	100
Gas in tanks, lb	27.7	27.7	27.7	27.7	2.8	2.8	2.8	2.8

of service machine limitations. Following removal of the experimental assembly, it may be desirable to remove all gas from the mainstream loop piping and store it in the gas storage tanks. This shutdown and depressurization is accomplished in three steps.

The first step in loop shutdown and depressurization is to cool the loop gas to less than 150°F. The second step is to decrease the loop pressure to about 300 psia and to remove the experimental fuel assembly. The mainstream loop pressure is reduced by bleeding gas into the gas storage tanks. The gas may be bled directly into the gas storage tanks or it may be decontaminated by passing it through the loop bypass gas-cleanup system (purification system) prior to entering the tanks. This is accomplished by closing valves HV-164 and HV-180 and opening valves HV-165, HV-166, HV-167, and HV-170. Valve HV-180 is opened if gas flow directly from the primary loop to the storage tanks is desired. Valve HV-164 is opened if gas flow to the storage tanks via the purification system is required. When the primary loop pressure reaches 300 psia or less, the test assembly may be removed. Depressurization is then continued until the pressures in the loop and in the gas storage tanks have equalized, as indicated in Table 5.3.1.

The third step in loop depressurization is to reduce the loop pressure to atmospheric pressure by use of the transfer pump. To accomplish this, valves HV-170 and HV-183 are closed, valve HV-171 is opened, and the transfer pump is started. When the loop reaches atmospheric pressure, valve HV-189 is closed. The remaining gas in the primary loop must be removed by the vacuum pump in the loop offgas system by opening valves HV-181 and HV-183.

Storage Gas Decontamination. After depressurizing the mainstream loop piping, it may be desirable to decontaminate the gas in the gas storage tanks prior to loop repressurization or prior to discharging the gas to the loop offgas system. This is accomplished by closing valves HV-150, HV-180, HV-183, and HV-167 and opening valves HV-164, HV-165, HV-166, HV-171, HV-189, and HV-170. The transfer pump can then circulate the gas from the gas storage tanks, through the purification system, through the transfer pump, and back to the gas storage tanks. Circulation is continued until the radiation monitor on the top header of the gas storage tanks indicates that the desired radiation level has been reached or that no further decontamination is occurring.

Loop Fill or Repressurization. Loop fill or repressurization using gas from the gas storage tanks is achieved by first allowing the experimental loop and gas storage tank pressures to equalize and then using the gas transfer pump to pump the remaining gas from the storage tanks to the loop. The pressures in the mainstream loop piping and the gas storage tanks can be equalized by closing valve HV-164 and opening valves HV-183 and HV-189. When pressure equalization has occurred, valves HV-189 and HV-180 are closed and valves HV-167, HV-170, and HV-171 are opened, and the remaining gas in the gas storage tanks is pumped into the primary loop by the transfer pump.

5.3.4. Project References

Design Criteria (CF 61-6-3)	
Gas Transfer and Storage System	Code B.7.0
Design Analyses (CF 61-6-4)	
Gas Transfer and Storage System	
Preliminary Design Drawings (CF 61-6-2)	
Process Flowsheet, Gas Transfer System	D-RD-10109
Details, Gas Storage Tank	D-RD-10080
Instrument Diagram, Gas Transfer, Storage, and Purification System	Q-2120-5
Specifications (CF 61-6-5)	
Helium/CO_2 Transfer Pump for EGCR In-Pile Loops	JS-28-103

5.4. Gas-Sampling System

5.4.1. Scope and Objectives

The design of the gas-sampling system for the EGCR experimental loops must be closely correlated with the specified loop objectives. Only the requirements of the sampling stations for the helium- and CO_2-cooled loops occupying the small reactor through-tubes are discussed here. The objectives of the gas-sampling system are (1) to obtain information on the release of fission products from fuel materials, (2) to determine deposition of activity in the system (i.e., activity in gas, activity deposited in the system, and activity removed by filters), (3) to develop techniques for activity level control, including evaluation of the bypass gas-cleanup system and the mainstream gas filters, (4) to obtain information on the mechanical, radiation, and thermal properties of unclad fuel elements, (5) to obtain information on the decontamination of a contaminated gas system, and (6) to obtain information as to the presence or buildup of other gaseous contaminants that might result from fuel element degassing, corrosion, etc.

In order to accomplish these objectives, the experimental loops will be provided with gas-monitoring and -sampling systems that will be capable of continuously withdrawing a small gas stream for on-line sampling and will also be capable of removing small representative samples of loop gas for subsequent analysis. The continuous sample stream will be monitored by a wire precipitator or some other suitable in-line fission-product detector. In addition to these gas-monitoring systems, the experimental loops will be provided with gamma monitors at several points along the loop piping. These points include the hot pipe from the reactor, the mainstream gas filter, the mainstream gas cooler, the bypass filter, and the loop compressors.

5.4.2. Design Criteria

A gas-sampling station will be designed for each of the EGCR experimental loops. Each station will have a facility for the extraction of a small quantity of gas from each of several designated points in the loop for transport to and analysis at another site. A connection will be provided at each sampling point for the attachment of one or more of the following types of in-line gas analyzers: gas chromatograph, mass spectrometer, or charged-wire fission-product detector.

If a gas chromatograph or mass spectrometer type of instrument is used as a continuous analyzer, the gas in the loop must be reduced in both temperature and pressure, since existing equipment is not designed to withstand the high loop temperatures and pressures. A gas chromatograph requires a continuous flow of carrier gas which must be carefully considered from the view point of loop containment. Water vapor in the sample gas will cause contamination of the columns used in a gas chromatograph. Consequently, a filter will be required upstream of the analyzer section to remove water vapor from the sample. An analysis for water vapor requires a separate instrument.

The experimental loop gas will be sampled at each of the following points: (1) downstream of the mainstream gas cooler, (2) downstream of the mainstream gas filter, (3) at the outlet of the loop compressors, (4) downstream of the mainstream gas heater, (5) downstream of the bypass gas-cleanup system, and (6) at the outlet of the gas storage tanks. The loop gas being sampled (He or CO_2) may be at pressures of from 500 to 1000 psia and at temperatures ranging from 550 to 950°F. The gas may be radioactive. The equilibrium loop activity may be as high as 10 900 curies (see sec. 11.2). The sampling-station design will permit taking from 3 to 6 samples per 24 hr from each of the loop sampling points. The desirable sample size has been estimated to be 25 to 50 cm^3 at STP.[2] The gas-sampling system will provide at least 50-cm^3 (STP) samples.

The principle of double-containment of the experimental loop gas must not be violated during extraction of a sample. Therefore, the sampling-station containment must serve as an extension of the experimenters' cell containment. The sampling-station containment will be operated at a pressure of less than one atmosphere during the sampling process to insure that any leakage will be inward.

Adequate shielding will be provided to reduce the gamma radiation to acceptable levels at the surface of the sampling-station containment vessel. A sample bomb will be designed with integral shielding, if necessary, or will be withdrawn into a shielded container to insure the reduction of operating personnel exposure to acceptable levels during the process of extracting and transporting a sample.

---

[2]Verbal communication from J. C. White to C. L. Segaser.

In order to obtain the best possible representative sample, the sampling lines and equipment in and to the sampling chamber will be maintained as near to the temperature of the loop gas being sampled as possible. If practical, a decontamination system will be provided to flush the sampling equipment after the sampling is completed. A vacuum system will be provided to purge atmospheric contaminants from the system prior to sampling. The vacuum system will also be used to dispose of residual radioactive gas in the system prior to withdrawing the sample bomb.

Instrumentation will be provided to monitor gas pressures in the sampling station and equipment. Interlocks and protective devices will be provided as required to render the operation of the sampler as safe as possible. The gas-sampling station will be easily accessible to operating personnel.

Elastomers susceptible to heat and radiation damage will not be used in any closures, valves, or couplings which are in contact with the hot loop gas.

5.4.3. Proposed Sampling Station

The proposed gas-sampling system for the EGCR experimental loops is shown in Fig. 5.4.1. The principle of operation of this system is similar to that utilized in the pneumatic-rabbit tubes which are commonly used in research reactors. The system is designed to collect 4-cm^3 samples of loop gas at the pressure and temperature existing at any time during loop operation. Under the most adverse operating conditions, that is, at lowest operating pressure (500 psia) and maximum temperature (950°F), this 4-cm^3 sample will be equivalent to more than 50 cm^3 at STP. The use of a small sample bomb should reduce or eliminate any requirement for shielding the bomb. Under the most severe operating conditions, the dose rate from a point source of 4 cm^3 of loop gas has been estimated[3] to be approximately 10 mr/hr at a distance of 2 ft.

5.4.4. Sampling-Station Operation

In order to operate the gas-sampling system, the pneumatic lines are purged by opening them to atmospheric pressure (cell air) through valve V-5 with the vacuum pump of the loop offgas system running. This purge removes any metal chips or dust that might cause the bomb to stick in transit. After purging, the operator loads the sample-bomb holder containing the sample bombs into the sampling-station tube. The sampling-station design incorporates alignment pins in the tube and sample holders so that each sample bomb is exactly positioned opposite the correct pneumatic transfer line.

---

[3]Verbal communication from T. H. Row to A. W. Culp, April 27, 1961.

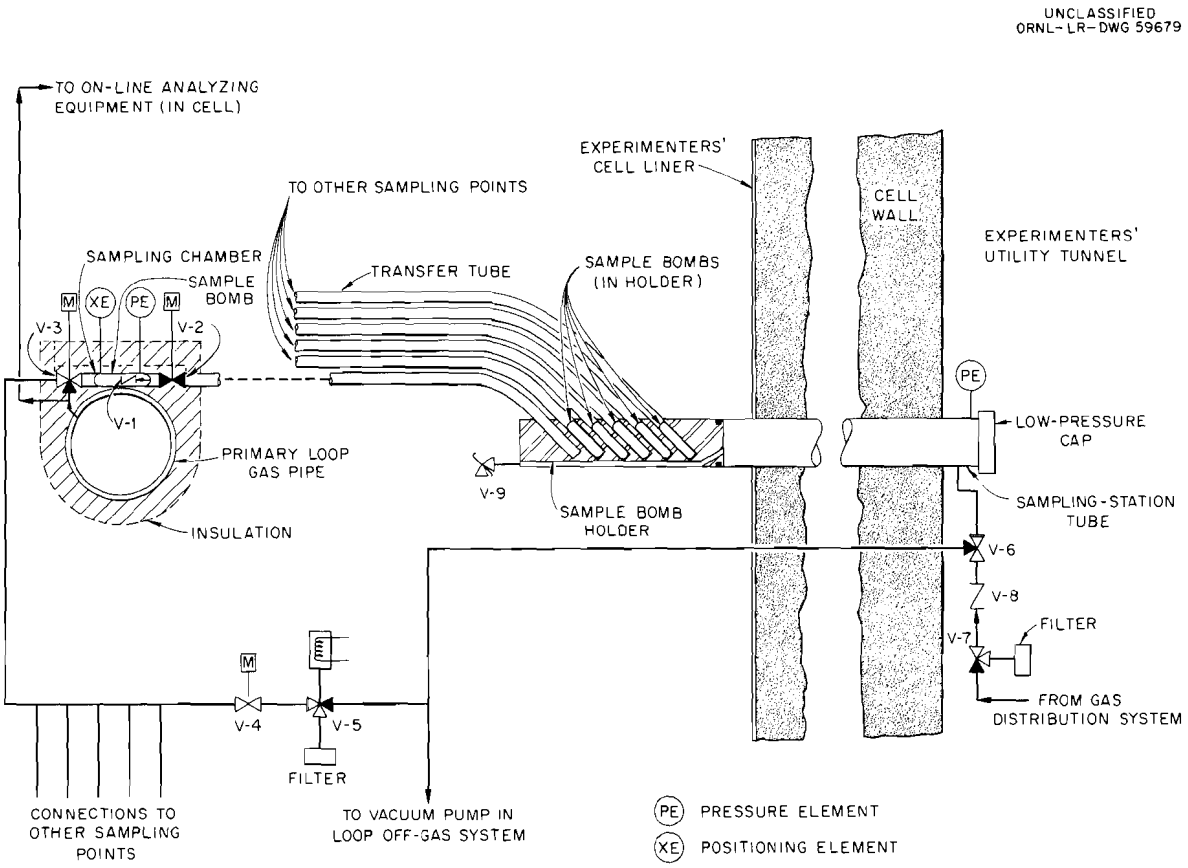

Fig. 5.4.1. Gas Sampling System.

When it is desired to take a sample, the proper sample bomb is pneumatically transferred by means of the transfer line through a motor-operated ball valve (V-2) into the sampling chamber mounted directly on the primary loop gas pipe. The sampling chamber is alternately evacuated by the vacuum pump in the loop offgas system and then purged with clean loop gas from the gas distribution system via the sampling-station tube and transfer tube. The sample bomb is permitted to reach thermal equilibrium with the primary loop gas piping. The entire installation is thermally insulated, so the bomb, pipe, valves, and lines should approach the loop gas temperature at that point. This should reduce the possibility of plating out some of the fission products on cold surfaces.

In order to take a sample, valve V-2 is closed and the sampling chamber is evacuated. The motor-operated valve V-3 is then "closed"[4] to pressurize the sampling chamber and bomb with gas from the loop. Valve V-3 is then "opened." After depressurization of the sampling chamber to the offgas system, valve V-2 is opened and the sampling chamber is purged with filtered air from the experimenters' utility tunnel via valve V-7 and the sampling-station tube and transfer tube. The purging air is exhausted to the cell offgas system. A small, high-temperature, high-pressure, check valve (V-1) is mounted inside each sample bomb to prevent the bomb from depressurizing after it has filled with loop gas. After purging of the sampling chamber, the sample bomb is pneumatically transferred to the sample bomb holder where the experimenter can manually withdraw the sample bomb by removing the low-pressure cap in the sampling-station tube and withdrawing the sample bomb holder. After the bomb is removed, any leakage past the check valve (V-1) will be prevented by inserting a seal plug in the check valve.

5.4.5. Design

The gas-sampling system and bombs will be constructed of stainless steel. The bombs will have concentric rings of some soft material on their outside surfaces to prevent sliding contact between the two stainless steel surfaces. The pneumatic transfer tubes will be designed to utilize long-radius bends and the number of vertical lines will be kept to a minimum. The tubes have been estimated to be approximately 3/4 in. o.d.

The differential pressure required to transfer the sample bombs can be obtained by using the vacuum pump in the loop offgas system. For this case, the pressure moving the bomb need never exceed atmospheric pressure. This eliminates the possibility of overpressurizing the cell, as might occur if a positive pressure source were utilized. Actually, clean loop gas

---

[4]In referring to the position of all three-way valves, the "open" position as used here corresponds to the position permitting axial flow through the valve while the "closed" position corresponds to branched flow through the valve.

(at 30 psia) from the gas distribution system will be used to transfer the bomb to the sampling chamber, but this supply will be automatically terminated whenever the cell is sealed by the cell vent valves to provide full containment. The bomb can be transferred by using cell air pressure if the cell is sealed. The use of clean loop gas to transfer the bomb should reduce the probability of atmospheric contamination of the sample.

As mentioned earlier, the bomb will be sized to take a 4-cm^3 gas sample. The bomb will be prepared by evacuating and filling with clean loop gas to a pressure of 20 psia to seat the check valve and prevent air contamination during transfer and purging. Upon heating to loop gas temperature, the bomb pressure may increase to 50 psia. This means the loop gas sample will be diluted by approximately 5 to 10%. If an absolute loop gas sample is desired, the sample bomb can be evacuated and a rupture disk mounted in series with the check valve to maintain a vacuum until the sampling chamber is pressurized to loop pressure.

One problem that must be considered in transferring the sample bomb to the sampling chamber is that the operator must be sure that the bomb is in place at the sampling chamber before closing valve V-2. To accomplish this, a carbon steel plug is attached to one end of the sample bomb. A small coil of high-temperature wire is wrapped around the corresponding end of the sampling chamber. Correct positioning of the sample bomb is then determined by the change of inductance of the coil when the carbon steel plug enters it.

The one apparent weak point in the sampling system is the check valve used in the sample bomb. This valve is subjected to high temperatures (950°F) and high pressures (1000 psia). A spring-loaded, ball check valve with a tungsten carbide ball and seat is commercially available that will take these pressures and temperatures. The unknown factor associated with this valve is its leak rate. This problem will be investigated. For sampling gas at 550°F, there are a number of small reliable check valves commercially available that have Teflon seals. If the leak rate of the tungsten carbide check valve proves to be excessive, it is felt that either the seat or ball may be replaced with a soft metal component which will improve the seal. In this case, the soft metallic part will probably be replaced each time a sample is taken.

The sampling-station tube and the pneumatic transfer tubes will be designed for a 50-psig internal pressure and a differential external pressure of 27 psi. A pressure-relief valve (V-9) will protect the sampling station by opening to the cell at a differential pressure of 40 psi. The relief valve will be sized to handle the flow into the sampling chamber from all the primary gas valves (V-3). Loop gas flow from the mainstream loop piping through these valves (V-3) will be orificed to prevent rapid depressurization of the loop.

5.4.6. Containment

The principal of secondary containment is never violated during operation of the sampling station. Normally, primary containment ends at valve V-3, except when pressurizing the sampling chamber, at which time valve V-2 provides the primary containment. The sampling-station tube and pneumatic transfer tubes serve as secondary containment when valve V-2 is open and when valve V-3 is closed. A number of interlocks prevent violation of containment. When removing the low-pressure cap on the sampling-station tube, one or more switches perform the following actions if they have not already been done: the vacuum pump will be turned on, all valves V-2 will be closed, all valves V-3 will be opened, and valve V-5 will be closed. Interlocks also prevent closing of valve V-3 unless (1) the pressure in the sample tube is subatmospheric, (2) the position indicator indicates the sample bomb is in position in the sampling chamber, and (3) valve V-2 is closed. An additional interlock prevents opening of valve V-2 as long as valve V-3 is closed.

The purpose of valve V-4 is to provide backup of valve V-3 if valve V-3 fails. Consequently, closing valve V-4 makes it impossible to blow down the loop following failure of any V-3 valves. The only valve that must be relatively leaktight (aside from valve V-1) is valve V-3, since it seals the primary loop gas system. Valves V-2 and V-3 will be designed for operation at maximum loop temperature and pressure. Valve V-4 will be designed to withstand full loop pressure but can be a low-temperature valve. Valves V-5, V-6, V-7, V-8, and V-9 will be low-pressure, low-temperature valves.

5.4.7. Installation

It is proposed to mount the sampling-station tube in the wall between the experimenters' cell and the experimenters' utility tunnel. The low-pressure cap will be open to the utility tunnel. Preferably, the sampling-station tube will be mounted in one corner of the cell where a simple shadow shield around one side and the end of the tube will provide satisfactory shielding of the penetration. Since the radiation level of the sample bombs is quite low, a shadow shield between the sampling-station tube and the primary gas piping should be sufficient.

Installation of the sampling-station tube in the cell wall rather than through the ceiling has a number of advantages. For instance, it reduces the number of vertical runs for the pneumatic transfer tubes. In addition, it permits access to the transfer tubes (through the sampling-station tube) with a flexible tool in the event a sample bomb should stick during transit to or from the bomb holder, and it permits installation of a ventilation hood above each sampling-station tube, if desired. The ventilation hood will be connected to the ventilation exhaust header of the cell ventilation system. Since this is an induced draft system, it should transfer any leakage of loop gas from the sample bombs directly to the stack.

5.4.8. Instrumentation

The instrumentation shown in Fig. 5.4.1 consists of pressure elements at the sampling-station tube and sampling chamber and the bomb position indicator (designated XE) at the sampling chamber. This should be sufficient instrumentation to insure proper operation of the sampling system.

5.4.9. Project References

Design Criteria (ORNL CF-61-6-3)	
Criteria for EGCR In-Pile Loop Sampling System	Code B.10.0
Preliminary Design Drawings (CF 61-6-2)	
Process Flowsheet, Gas Sampling System	D-RD-10113

5.5. Fuel-Handling Equipment

5.5.1. Service Machine

The principal piece of fuel-handling equipment used by the experimental loop facility is the EGCR service machine. This machine is designed to install experimental fuel assemblies in the loop through-tubes, to remove them, and to transport them to and from the reactor and the experimental fuel assembly storage holes or to transport them to the fuel carrier or the spent-fuel transfer mechanism. The service machine is also designed to handle open core experimental assemblies, control rods, shield plugs, and other special equipment which can be inserted into any of the reactor top nozzles.

The service machine is housed in an upright cylindrical pressure vessel approximately 52 ft high (exclusive of external shielding) and 71 in. in inside diameter. The pressure vessel serves as a pressure-tight housing that contains the tools and mechanisms necessary to accomplish the above listed functions. To achieve mobility, the service machine is mounted on the trolley of a traveling bridge crane. It can be positioned over any reactor vessel top nozzle or over any of the storage, access, or rehearsal areas. (KE dwgs 5927-EGCR-A-122 and 5927-EGCR-MS-130 show the general arrangement of the service machine and the area in which it operates.)

The service machine can be connected to the reactor pressure vessel top nozzles or to the top nozzles of the storage facilities by an extendible nozzle and flange. A valve at the bottom of the service machine permits evacuation and pressurization of the service machine and provides a seal between the service machine and the reactor pressure vessel nozzle. The service machine is manually bolted to the selected nozzle flange, and then all operations are carried out remotely from the service machine

control console. (A detailed description of the service machine is given in EGCR Study No. II-460 and in Section 5.11 of Volume I of the EGCR Final Hazards Summary Report.)

The reactor servicing tools and mechanisms are mounted on a rotary turret inside the service machine pressure vessel to permit indexing of tools required for any particular operation over the service machine nozzle. The five turret positions and the mechanisms associated with each position are as follows:

Turret Position No.	Tool or Mechanism
I	Nozzle closure tool and new fuel storage facility
II	Experimental assembly handling tool
III	Replacement shield plug installation tool
IV	Shield plug removal tool
V	Fuel chute and instrument hoist

Positions I through IV are all used during the installation or removal of an experimental assembly, with position II being used during the actual lifting of the assembly. The experimental assembly handling tool has a total travel of approximately 55 ft 8 in., of which 9 ft 6 in. is by a telescope drive; the remainder is by a ball lead screw drive. It takes approximately 4 hr to complete the total travel in one direction.

Cooling of the experimental fuel assembly during removal from the loop and during storage in the service machine is achieved by means of a blower and cooler mounted on the service machine carriage. A detailed discussion of the operation of the service machine during the removal of an experiment is given in Section 5.12.

5.5.2. Experimental Fuel Assembly Storage Holes

The principal facilities for the storage of irradiated fuel assemblies are the two special storage holes located in the reactor biological shield at the west end of the service machine room. One hole is located at each end of a row of control rod storage pits. Each storage hole facility is an integral unit located within a 50-ft-long, 18-in.-diam pipe imbedded in the biological shield. Each facility provides storage for experiments from either the 5 1/2-in. or 9 1/2-in. through-tubes. Each storage hole facility consists of a primary pressure vessel with a cooling-water jacket, a top nozzle closure, the necessary facilities for supplying and controlling the helium and cooling water, and the required vent and evacuation system. A simplified flow diagram is given in Fig. 5.5.1.

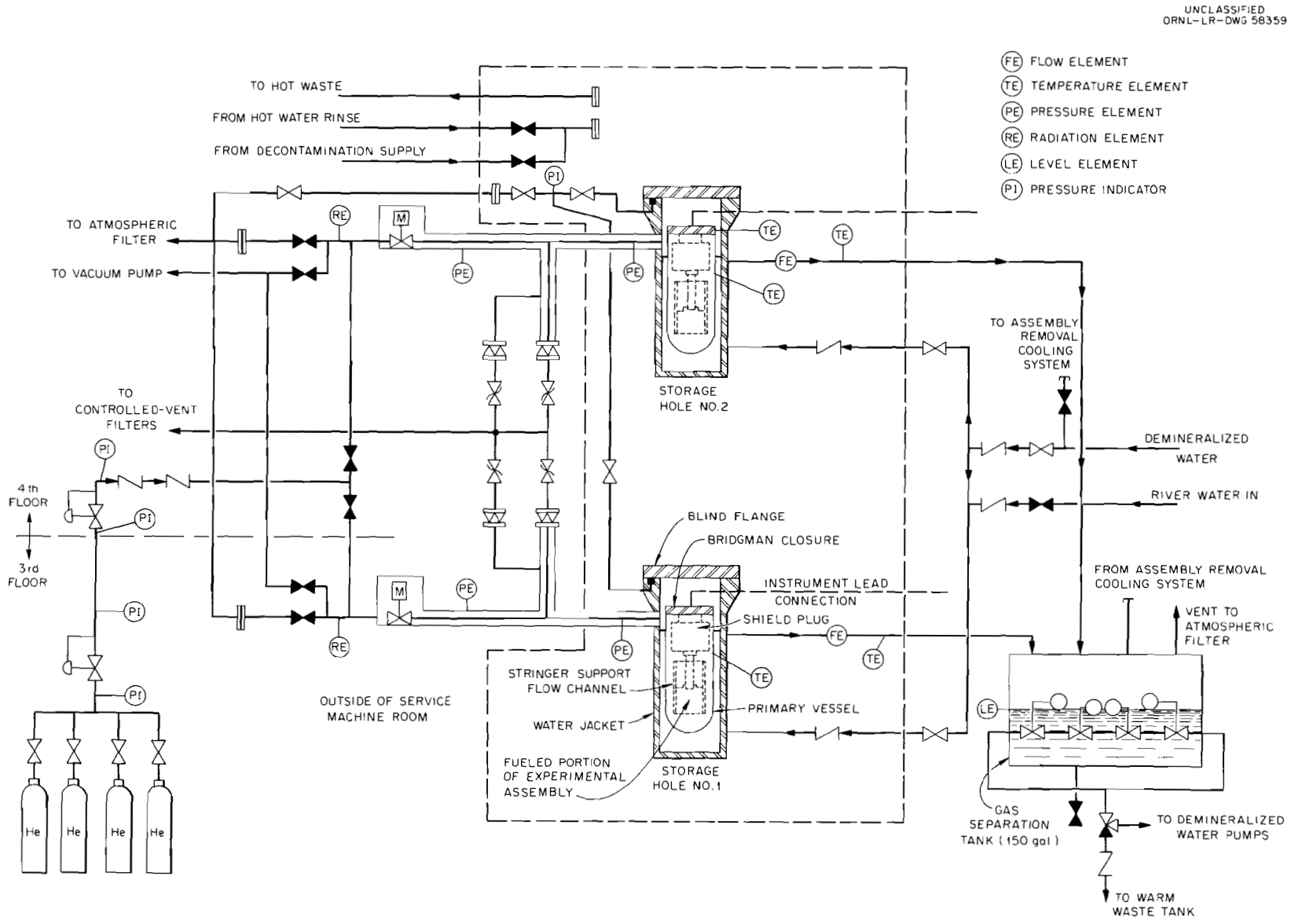

Fig. 5.5.1. Fuel Assembly Storage Hole.

The fuel assemblies in the storage hole facility are cooled by the natural convection of pressurized helium (up to 350 psia) up through the fuel and then down along the water-cooled wall of the primary vessel. The cooling system is designed to remove 51 000 Btu/hr while keeping all portions of the fuel assembly at or below its normal in-loop operating temperatures. The stainless steel primary vessel (10-in. sched.-40 pipe, approximately 50 ft long) is designed for 425 psig at 1075°F. Detailed design calculations and descriptions appear in the Design Analyses (see sec. 5.5.5).

The top of the storage hole facility is similar to the reactor pressure vessel top nozzles in that it is equipped with a flange for connecting the service machine nozzle and a breach for attaching the Bridgman closures used in the reactor pressure vessel nozzles. The top flanged opening is closed with a blind flange when the service machine is not connected. Containment of any leakage from the primary pressure vessel through the Bridgman closure is provided by a secondary containment volume formed by the blind flange closure and a cylindrical vessel that is welded to the primary pressure vessel just below the Bridgman closure. This containment volume is designed to hold 425 psia pressure at 500°F. Any leakage of activity from the primary vessel to the cooling water jacket is carried to the gas separation tank by the water. In the gas separation tank the gaseous activity is evolved and vented to the plant stack through an absolute filter and an iodine trap. The water system from the check valve in the inlet line to and including the gas separation tank is designed for 425 psig at 500°F.

Each storage hole facility is controlled from a control panel in the service machine equipment room on the fourth floor of the reactor containment building. Critical pressures and temperatures are also monitored in the reactor control room. When not containing an experimental fuel element, the storage hole facility will contain a dummy shield plug attached to a Bridgman closure.

An experimental fuel assembly is inserted into the storage hole facility from the service machine in the following manner. The blind flange is removed from the flange connection for the service machine, the service machine is moved into position, and the service machine nozzle is connected to the flange. The volume of gas between the service machine valve and the Bridgman closure (sniffer gas region) is then evacuated and filled with helium. The pressures in the service machine, in the sniffer gas region, and in the storage hole are equalized at about 300 psig, and the service machine valve is opened. The Bridgman closure is then unlocked, and the closure and dummy shield plug are lifted into the service machine. The experimental fuel assembly carried in Turret position II is then rotated over the storage hole, and the fuel assembly is lowered into the hole. While the fuel assembly is being lowered, the helium flow is by natural convection from the bottom of the service machine, down between the primary pressure vessel wall and the fuel assembly,

up through the fuel assembly, and out to the top of the service machine. Once the fuel assembly has been lowered to the point where the shield plug at the top of the assembly cuts off flow to and from the service machine, the heat is removed by the natural convection of pressurized helium along the water-cooled wall of the primary pressure vessel. After the experimental assembly has been fully inserted into the primary pressure vessel, the Bridgman closure is locked and the service machine valve is closed. The sniffer gas region is then evacuated and refilled with air, and the service machine nozzle is disconnected. The service machine is moved away, and the blind flange is replaced on the storage hole. After each step that requires making a gastight seal, a leak test of the joint is made prior to going on to the next step.

5.5.3. Fuel Carrier

A fuel carrier or cask will be provided for shipment of experimental fuel elements to the reprocessing or examination facility. The carrier will be designed to accommodate the 13-ft-long in-core portion of the experimental fuel assembly after it has been separated from its support stringer. The carrier will be a completely sealed pressure vessel containing a gas atmosphere. The decay heat from the fuel elements will be removed by natural convection and radiation to the carrier vessel wall. The carrier vessel wall will be cooled by the natural convection of a sealed water system which circulates through a water jacket in the vessel wall and out through finned tubes extending through the carrier shield into the ambient atmosphere.

At the top of the carrier vessel will be a shear or cutoff tool for separating the fuel from its support structure. The carrier vessel will be closed by a Bridgman closure attached to a short shield plug. Secondary containment, including a blind flange, will be provided around the Bridgman closure to fully contain any leakage through the closure seals. During insertion of the experimental fuel elements into the carrier by the service machine, a helium supply for pressurizing the carrier and either electricity or compressed air for operating the shear will be required. Once the fuel is in the carrier and the carrier vessel is sealed, no utilities will be needed.

The fuel will be inserted into the carrier in the following manner. The carrier will be positioned in a cradle in the hatchway of the fourth floor of the reactor containment building, and the service machine will be connected after the blind flange is removed. The sniffer region will be evacuated and filled with gas, and the pressures in the service machine, sniffer region, and the carrier vessel will be equalized, after which the service machine valve will be opened and the Bridgman closure and shield plug of the carrier removed. The experimental fuel assembly will be lowered into the carrier until the proper position is reached for the separation of the fuel elements from their support stringer. The separation will be made by actuating the cutoff mechanism. The remaining support structure will be pulled back into the service machine. The carrier,

Bridgman closure, and shield plug will then be reinserted and locked. After closing the service machine valve and evacuating and refilling the sniffer region, the service machine will be disconnected and moved away. The carrier will then be closed with the blind flange and lowered to a dolly on the ground floor, after which the carrier will be turned on its side and removed from the reactor building through the equipment airlock.

5.5.4. Spent Fuel Transfer Mechanism

The spent fuel transfer mechanism is the means by which fuel from either the charge machine or service machine can be carried to the fuel storage basin in the reactor service building. The mechanism is located at the east side of the reactor containment building. The spent fuel transfer mechanism, as shown in Fig. 5.5.2, consists primarily of the top and bottom adapter nozzles, a movable transfer tube, a hoist, an inclined discahrge tube leading to the spent fuel storage basin, a cable cutter or shear, and guide rails for positioning of the transfer tube.

The spent fuel assembly is inserted into the transfer tube by the service machine (which is depressurized), and the fuel elements are separated from their support stringer by the shear. The transfer tube is then lowered down the guide rail to an inclined position where it mates with the discharge tube which is partially filled with water. The inlet valve to the discharge tube is opened and the fuel is released to the tube. The inlet valve is then closed, and the fuel is transferred to the fuel storage basin by opening the outlet valve. Additional portions of the support structure (exclusive of the shield plug and Bridgman closure) may be cut off and transferred to the storage basin in a like manner. (A detailed description of the entire mechanism is given in Section 5.9 of Volume I of the EGCR Final Hazards Summary Report; KE dwg. 5927-EGCR-M203 shows the general arrangement of the system.)

5.5.5. Project References

Design Criteria (CF 61-6-3)	
Experimental Fuel Assembly Storage Hole Criteria	Code C.7.0
Fuel Carrier, Cradle and Dolly Criteria	Code D.2.5, 6, 7
Design Analyses (CF 61-6-4)	
Fuel Assembly Storage Hole	
Preliminary Design Drawings (CF 61-6-2)	
Process Flowsheet, Fuel Assembly Storage Hole	D-RD-10361
Instrument Diagram, Fuel Assembly Storage Hole	Q-2120-65
Fuel Assembly Storage Hole	E-RD-10455

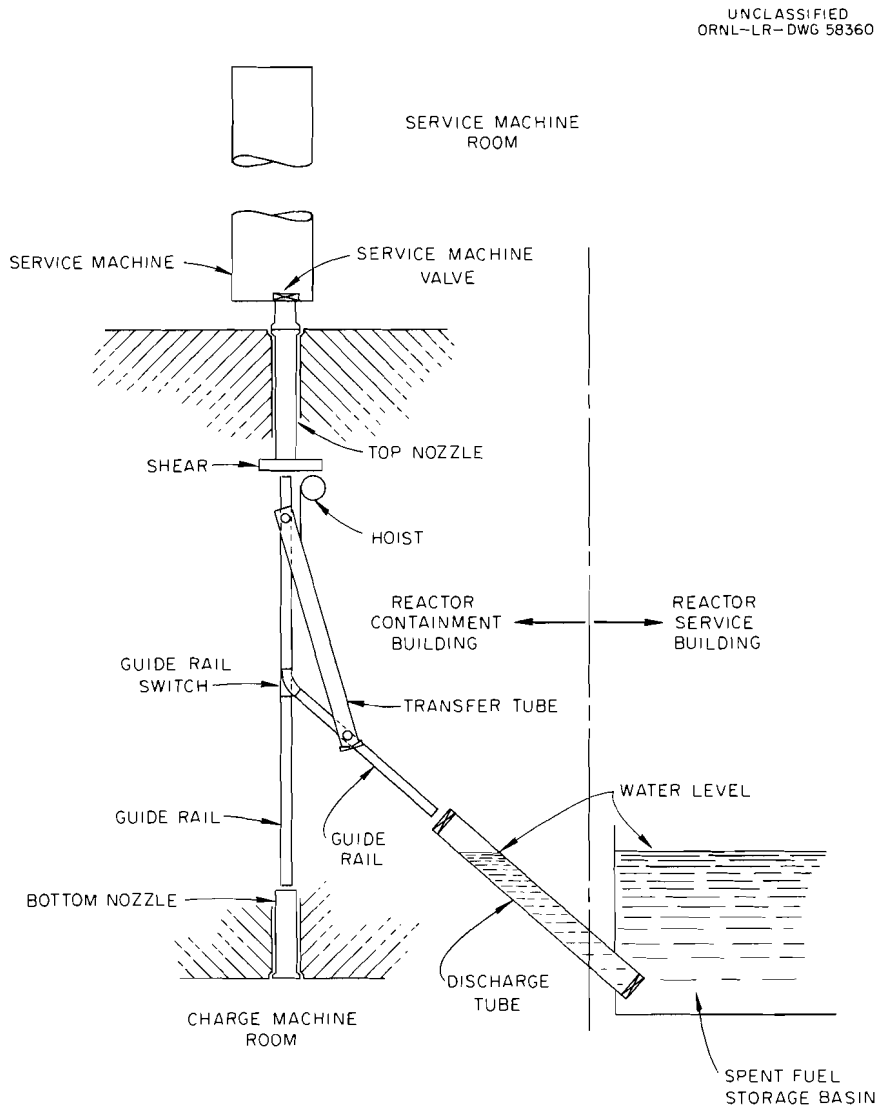

Fig. 5.5.2. Spent Fuel Transfer Mechanism.

5.6. Water Systems

5.6.1. Mainstream Gas-Cooling System

The mainstream gas-cooling system is shown in Fig. 5.6.1. This system consists of three separate units: the steam system, the service (river) water system, and the blowdown system.

The mainstream gas cooler is an evaporative cooler in which demineralized water boils inside re-entrant tubes and the experimental loop gas passes on the outside (shell side) of the tubes. The rate of heat removal is regulated by controlling the condensate flow to the water header that feeds the re-entrant tubes. A change in water level in the header changes the number of tubes filled with water and thus effectively changes the heat transfer surface of the cooler to obtain the desired loop-gas exit temperature. The detailed operating characteristics of the cooler are discussed in Section 4.5.

Steam generated from demineralized water serves as the intermediate heat transfer fluid between the loop gas and the river cooling water. All parts of the steam system which are not in contact with the loop gas are designed to contain pressures up to 1200 psig at 650°F so they can effectively provide secondary containment of the experimental loop gas. The parts of the steam system in contact with the loop gas are designed for 1075°F operation. The steam system is composed of three primary components: the evaporative cooler, in which heat is transferred from the loop gas to demineralized water and steam; the loop condenser, in which heat is transferred from the steam to river water; and the condensate storage tank, which collects the loop condenser condensate and acts as a reservoir for additional condensate to take care of required variations in the heat removal capacity of the evaporative cooler.

Starting at the condensate storage tank, the demineralized water passes by gravity to an automatically controlled throttling valve (V-1) mounted above the cooler and radiation shield near the fourth floor of the reactor containment vessel. The water passes through valve V-1 to the evaporative cooler mounted in the vertical pipe chase of the reactor biological shield. The water is vaporized in the cooler and the resulting steam is exhausted to the loop condenser where the steam transfers its latent heat to river water flowing through the condenser tubes. The resulting condensate drains into the condensate storage tank. There is only one valve (V-1) in the steam system. This valve throttles the condensate flow and hence controls the heat-removal rate of the evaporative cooler. Valve V-1 is automatically controlled to maintain a given loop gas exit temperature from the cooler, as determined by the operator at the experimenters' control board. The steam system is drained by opening valve V-5. The drainage is to the warm waste system because the condensate might be radioactive if a loop gas leak developed to the steam system inside the evaporative cooler.

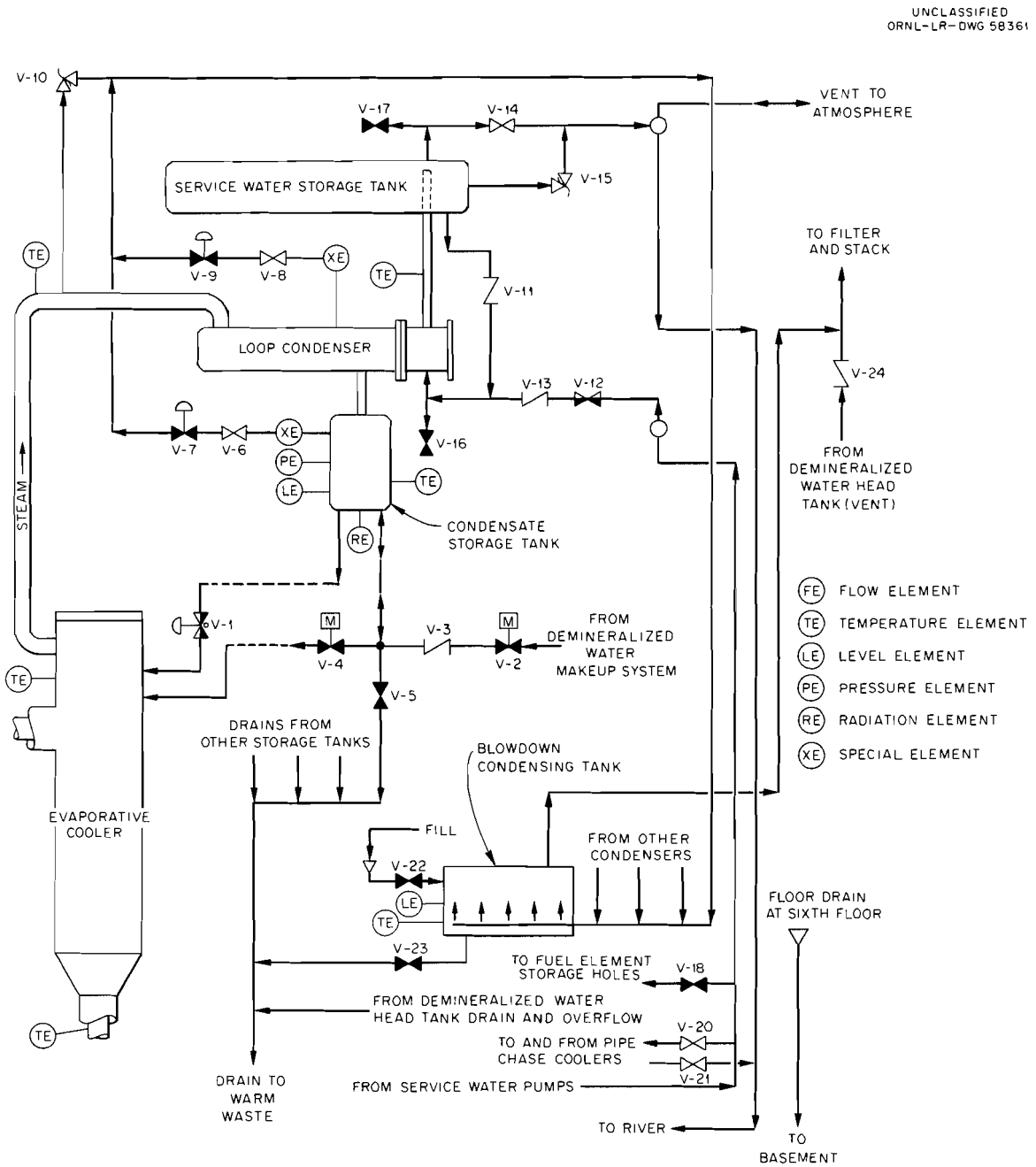

Fig. 5.6.1. Mainstream Gas-Cooling System.

Occasionally it is necessary to provide demineralized-water makeup to the system because of losses. These losses occur when venting noncondensible gases, such as air initially trapped in the system, or loop gas that might collect from small leaks in the evaporative cooler; or losses might result from small leaks in the system itself. Demineralized-water makeup to the steam system is provided by adding water from the demineralized-water head tank by means of a small, high-pressure, feedwater pump. Water is added through a line containing a motor-operated valve (V-2) in series with a check valve (V-3). Normally, makeup is added to the condensate storage tank by opening valve V-2 and keeping valve V-4 closed. Under some emergency conditions, such as a large leak in the steam system, it is desirable to add water directly to the evaporator. This is done by opening valves V-2 and V-4.

Although the gas-side portion of the evaporative cooler is designed to safely contain loop gas at design temperature and pressure (1100 psia, 1075°F) with no water on the tube sheet, it is desirable to maintain some water on the tube sheet at all times to prevent very high thermal stresses from developing. For this reason, the tube sheet temperature is monitored during loop operation and an alarm is provided to alert the loop operator to the condition. The operator may correct the condition by adding water to the tube sheet through valve V-4 (see sec. 4.5). This condition is likely to occur only when the cooler is operating with no heat being transferred, such as during loop startup.

A vent and blowdown system provides pressure relief for the steam system and permits venting of noncondensible gases that might otherwise collect in the system during normal operation. The vent and blowdown system is designed to condense any steam that is vented from the steam system and transfer the noncondensible gases to the reactor offgas system. The vent system is necessary because the loop condenser efficiency is drastically reduced by the presence of noncondensible gases. These gases may be air initially trapped in the system or they may come from a loop gas leak in the evaporative cooler. The loop condenser contains baffles arranged so that the noncondensible gases are swept to one end of the unit by the condensing steam. As these gases collect, the condenser efficiency decreases and causes an increase in the steam pressure and, ultimately, an increase in the loop-gas exit temperature. When this condition is reached, the loop operator vents the condenser through one of two pneumatically operated valves (V-7 and V-9). Helium, being lighter than steam at the same temperature and pressure, collects at a high point in the condenser and is preferentially removed by opening valve V-9. On the other hand, CO_2 and air, being heavier than steam at the same temperature and pressure, collect at a low point in the system and are preferentially removed by venting through valve V-7. Valves V-6 and V-8 are two manually operated globe valves which will be used in an emergency if the automatic valves fail in the open position.

Under certain emergency conditions, it might be necessary for the evaporative cooler to rapidly reduce the loop-gas temperature in order to

establish flow by natural convection. This is done automatically by flooding the cooler through valves V-1 and V-4. The operator can also vent the steam system to atmospheric pressure by opening valves V-7 and V-9. This will rapidly decrease the steam, water, and cooler temperature to 212°F, thereby abruptly cooling the loop gas. It will also rid the system of any noncondensible gases that might be present in the steam system. After the steam system pressure reaches atmospheric, valves V-7 and V-9 are closed so that the system can operate at a vacuum as the heat load decreases. This permits a closer approach of the loop gas temperature to that of the service water in the loop condenser.

The blowdown system provides pressure relief for the steam system through a pressure relief valve (V-10). This valve is set to start relieving the system at the system design pressure (1200 psia). All gas in the blowdown system is vented to a blowdown condensing tank to condense any steam in the mixture before venting to the reactor offgas system. This condensing tank is simply a tank of water in which the gas inlet line is located below the water surface. A perforated distribution tube along the bottom of the tank assures adequate mixing of the gas and water. The noncondensible gases are vented to the reactor-gas venting system through a 3-in. pipe which is joined to the offgas line connected to the demineralized-water head tank. A check valve (V-24) is installed in the vent line from the demineralized-water head tank to protect that tank against overpressurization. One blowdown condensing tank serves all loop condensers. The blowdown condensing tank is drained through valve V-23. The drain line is connected to the warm waste system because the condensing water may contain fission products carried over in the vented steam-gas mixtures. Water is added to the condensing tank through a 1/2-in. pipe containing a hand-operated valve (V-22). This water will be added from any convenient water supply by means of a hose. In order to prevent the possibility of flooding the tank during the filling process, no permanent water connections to the tank will be permitted.

The portion of the service (river) water system shown in Fig. 5.6.1 consists of the service water headers and some of the associated piping on the sixth floor of the reactor containment vessel. The service water flow to each condenser is approximately 250 gpm at maximum loop power conditions. Water flows from the inlet header to the loop condenser through a line containing a manually operated valve (V-12) and a check valve (V-13) in series. The return line contains a manually operated valve (V-14). Valve V-12 is used to throttle the service water flow to obtain the desired condensing rate. Since the steam system pressure is strongly dependent on the service water flow rate (condensing rate) in the condenser, the steam pressure may be varied by throttling valve V-12. In no event will the service water flow be throttled to the point where the exit water temperature exceeds 150°F. This precaution will be taken to reduce the accumulation of excessive scale deposits in the condenser tubes. Valves V-16 and V-17 are the drain and vent valves, respectively, for the service water side of the loop condenser. Valve V-15 is a pressure relief valve that protects the water side of the loop condenser from

the excessive hydrostatic pressure that might develop if the condensing water were valved off at both ends while the condenser was hot.

The service water storage tank mounted above the loop condenser provides emergency cooling water to the condenser if the normal service water flow is interrupted. Under certain emergency conditions, when all cooling water flow to the loop condenser is lost, water will flow by gravity from the service water storage tank through a 2-in. line, containing a check valve (V-11), to the condenser. The water will flow through the condenser, where the heat will be removed from the steam system by boiling some of the service water. The water-steam mixture will then flow back into the storage tank, where the steam will be vented to the atmosphere via the outlet line, and most of the entrained water will be separated and returned to the tank.

The service water storage tank is constructed of carbon steel pipe (30 in., sched. 10) and is approximately 10 ft long. The tank contains sufficient water to remove the heat generated during a normal reactor shutdown, plus the heat stored in the primary loop piping and the afterheat generated by the experimental fuel assembly over the first 24 hr following shutdown. It should be pointed out that this cooling system is employed only if all cooling water flow to the loop condenser is lost. If the service water flow is interrupted, water will be provided from the emergency cooling water system via the service water line at a sufficient rate to remove the experiment afterheat without boiling taking place in the condenser. If this supply also fails, then the service water storage tanks will take over.

All service water return lines from the loop condensers discharge into a common 14-in. drain header on the sixth floor of the reactor containment vessel. This header is vented to the atmosphere by a 2-in. pipe that penetrates the reactor containment vessel above the sixth-floor level. The drain header must be vented because the friction drop in the return line is so low that the water in the loop condenser might otherwise operate at a vacuum sufficient to cause boiling of the service water in the condenser and result in excessive scale formation. Venting the drain system to the atmosphere external to the containment vessel is mandatory because the breathing action of the vent must never be allowed to draw contaminated air (such as might result from reactor depressurization) into the service water discharge.

Any accumulation of water on the sixth floor of the reactor containment vessel is considered hazardous to the reactor because it might drain into the reactor pressure vessel through potentially open nozzles at the fourth floor level and thereby increase the reactivity of the core. To minimize this hazard, a floor drain line is installed at the sixth floor to dump any water, such as might result from a broken water line, into the first or second basements of the reactor containment vessel, where it cannot interfere with reactor operations.

One of the important considerations in the design of the mainstream gas-cooling system is the location of the system components. It is proposed that all major components other than the evaporative cooler and the condensate throttling valve (V-1) be located on the sixth floor of the reactor containment vessel. This leaves the pipe chases relatively uncongested; it permits access to the loop condenser and associated instrumentation for maintenance and repair; it reduces the heat load on the pipe-chase cooling system; and it provides a large driving head for natural convection in the steam system. The evaporative cooler is mounted high in the vertical pipe chase of the reactor biological shield to assist natural convection of the loop gas. The condensate return valve is located above the evaporative cooler at the fourth floor level so that it is accessible for maintenance and yet is near enough to the cooler to have a short response time. The steam, condensate return, and emergency cooling water lines are routed from the evaporative cooler to the loop condenser on the sixth floor.

5.6.2. Demineralized-Water System for Cooling In-Cell Components

The principle function of the demineralized-water system is to cool the three gas-bearing compressors inside each experimenters' cell by cooling the loop gas inside the motor housing and carrying away the heat energy generated by the electrical resistance of the motor windings. The demineralized water is also used to cool the following components located inside the experimenters' cell: the transfer pump and intercoolers, the vacuum pump, and the cooler in the loop bypass gas-cleanup system. A separate demineralized-water supply line to the cell is incorporated to cool the auxiliary blower.

The in-cell demineralized-water system is shown in Fig. 5.6.2. The loop compressors and other loop equipment are cooled by 100°F demineralized water entering the experimenters' cell through a 1 1/2-in. pipe that is connected to a 2-in. header. The demineralized-water flow rate, excluding the flow to the auxiliary blower, is approximately 25 gpm per cell (including 4 gpm per compressor). The flow to the auxiliary blower is estimated to be less than 15 gpm. All demineralized water in the cell is dumped into a common sump tank and is returned through a 4-in. header via a 1 1/2-in. line. The demineralized water from the 4-in. supply header passes through a manually operated globe valve (V-38), which is used to adjust the gross flow rate into the experimenters' cell. A swing check valve (V-64) is installed just inside the cell to prevent backflow into the supply header if a component failure occurs that releases high-pressure loop gas into the demineralized water system (such as a compressor housing failure). After passing through the check valve, the demineralized water enters a 1 1/2-in. header, which distributes the water to various in-cell components. All feed lines from the 1 1/2-in. header are 1/2-in. pipes. Each feed line contains a manually operated globe valve (V-67) to preadjust the flow to each component before the loop is started.

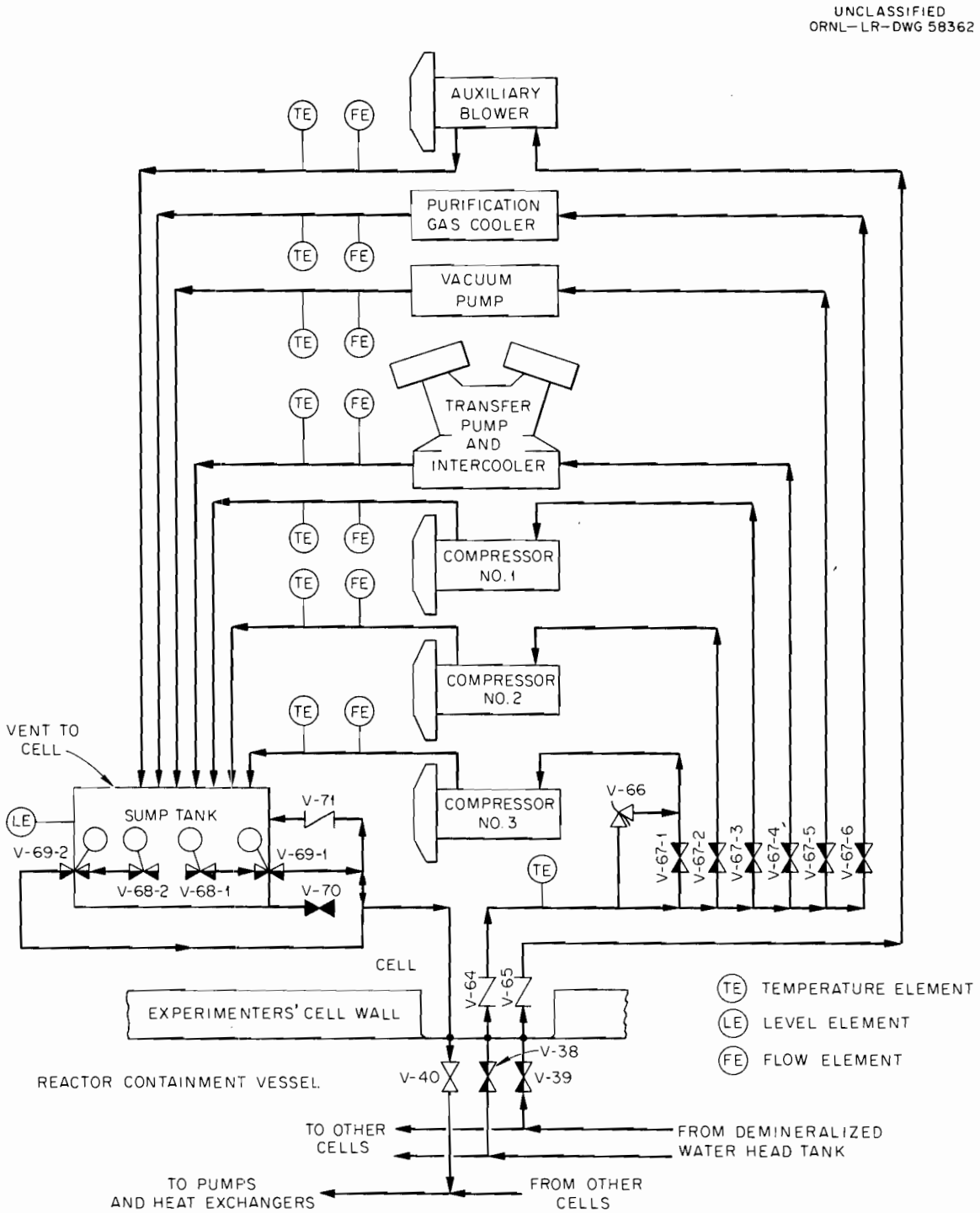

Fig. 5.6.2. Demineralized-Cooling-Water System for In-Cell Components.

The demineralized-water system for cooling the auxiliary blower consists of a separate feed line from the demineralized water head tank to the experimenters' cells. This reduces the probability of a simultaneous loss of cooling water to the loop compressors and the auxiliary blower. The auxiliary blower cooling water is fed from the head tank through a 2-in. line. The flow to each cell passes through a 1-in. line containing a manual globe valve, V-39. A swing check valve, V-65, is installed immediately inside the cell to prevent backflow through the line. The flow rate to the auxiliary blower is controlled by throttling valve V-39.

After the demineralized water passes through each component, it is transferred through individual pipes to a 100-gal sump tank inside the experimenters' cell. This tank provides a 2- to 3-min holdup of the cooling water and thereby permits separation of entrained gases that might result from leaks in the loop components. Employing separate discharge lines and an open sump tank prevents any minor gas leakage in a given component from disrupting the flow to the other components.

Upon leaving the sump tank, the demineralized water flows through two flow control valves (V-68 and V-69) connected in series and paralleled by a second set of valves for reliability. The water leaves the experimenters' cell through a manually operated valve (V-40) located outside the experimenters' cell. A manually operated globe valve (V-70) is used to drain the sump tank into the experimenters' cell, where it can be removed through the cell drain system. The sump tanks in all experimenters' cells are connected in parallel. The flow valves (V-68 and V-69) prevent the sump tanks from blowing dry in the event of excessive pressure in the cell and thus maintain secondary containment of the experimenters' cell.

Pressure-relief valves are provided to protect the system from excessive hydrostatic pressures resulting from the thermal expansion of water in valved off sections of pipe. A pressure-relief valve (V-66) protects the pipe between valves V-38 and V-67. The pipe between valves V-69 and V-40 is protected by means of check valve V-71, which opens into the top of the sump tank.

5.6.3. Demineralized-Cooling-Water Supply System

The demineralized-cooling-water supply system shown in Fig. 5.6.3 supplies cooling water to the experimenters' cell, routine and emergency water for the evaporative cooler steam system, and cooling water for the experimental fuel element storage holes. The demineralized-water supply system serving the experimenters' cells and experimental fuel element storage holes consists of two supply lines running from the demineralized-water head tank to the feeder lines that distribute the flow to the respective areas. The water flow to the fuel element storage holes is fed through valve V-61. The cell cooling water to the gas-bearing compressors,

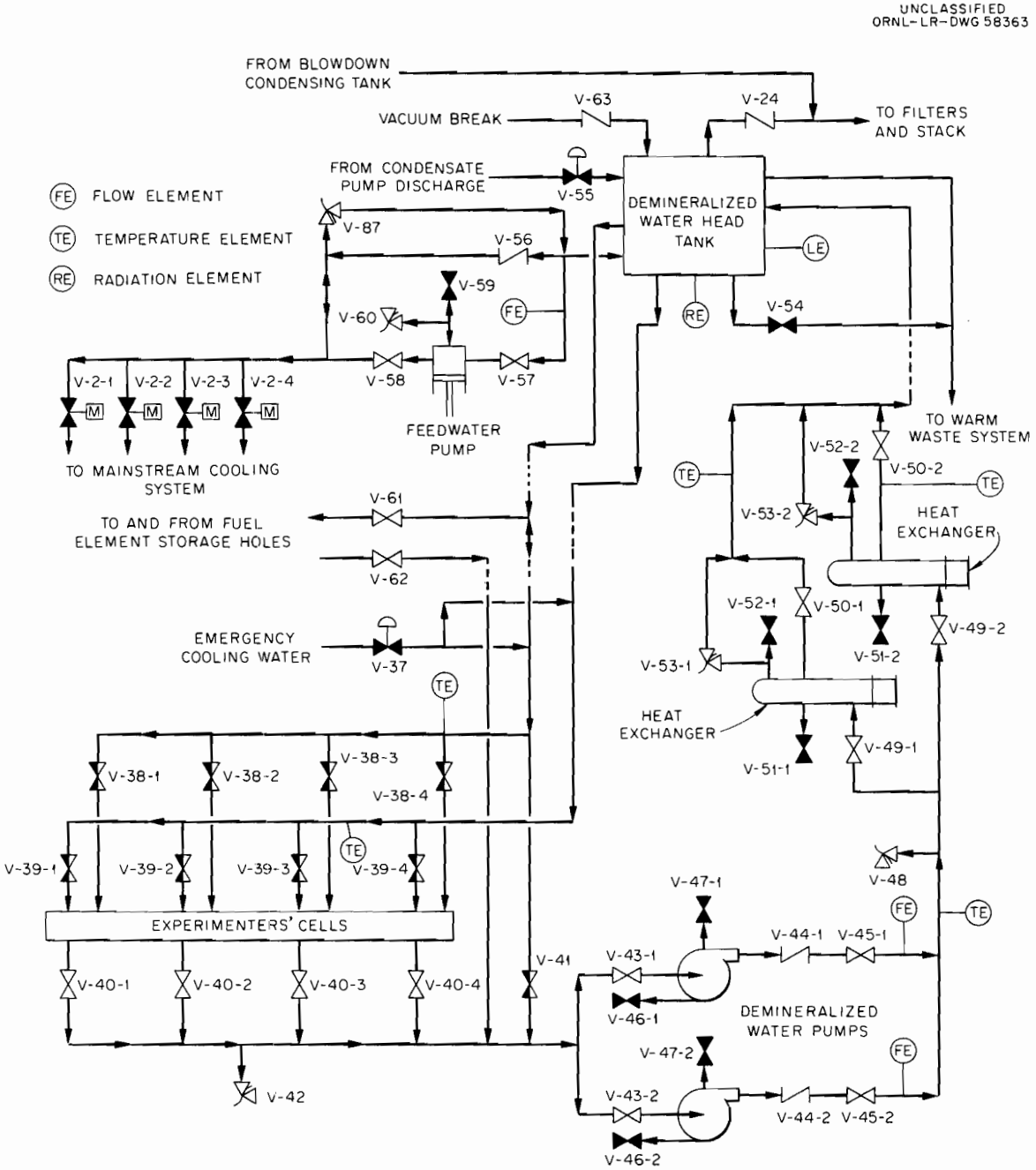

Fig. 5.6.3. Demineralized-Cooling-Water Supply System.

etc., passes through valve V-38, while the cooling water for the auxiliary blower enters the cell via valve V-39. The water leaving the storage holes or experimenters' cells passes through discharge isolation valves (V-62 and V-40, respectively) and flows to the two demineralized-water pumps connected in parallel in the second basement of the reactor containment vessel. From here it is pumped through two demineralized-water coolers (heat exchangers) connected in parallel and back to the demineralized-water head tank. A small line containing a manually operated globe valve (V-41) bypasses the experimenters' cells and fuel element storage hole coolers to maintain a small flow through the pumps. This prevents the pumps from overheating during a no flow condition. Each pump is connected to a separate electrical supply system and is operated in parallel with the other pump to insure a continuous flow of demineralized water. Each return line feeding the pumps contains a gate valve (V-43). The pump discharge line from each pump contains a check valve (V-44) and a gate valve (V-45) in series. Each pump also has a vent valve (V-47) and a drain valve (V-46).

The pipes to and from each demineralized-water cooler contain manually operated gate valves (V-49 and V-50). The shell side of each cooler is vented and drained through valves V-52 and V-51. The shell side of each cooler is protected from excessive hydrostatic pressure by a pressure-relief valve (V-53). Locating the demineralized-water coolers upstream from the head tank means that the head tank contains water at 100°F. This reservoir of cool water affords extra system protection in case all cooling water to one or both of the demineralized-water coolers is lost.

If all manually operated valves in the demineralized-water system are closed, excessive hydrostatic pressure may develop because of liquid expansion in the pipes. In this event, the system is protected by pressure-relief valves V-42, V-48, V-60, and V-87.

The demineralized-water makeup to the evaporative cooler steam system consists of a line running from the demineralized-water head tank to a small-capacity high-pressure feedwater pump on the sixth floor. The feed and discharge lines of this pump contain manually operated globe valves (V-57 and V-58). The pump is vented through valve V-59. A drain valve (not shown) is also provided. The discharge of the feedwater pump is transferred to the condensate storage tank through valve V-2. It can also be transferred directly to the evaporative cooler by opening valves V-2 and V-4.

If a rupture of the evaporative cooler steam system or loss of service water should occur, emergency cooling of the evaporative cooler can be obtained with water supplied directly from the demineralized-water head tank without starting the feedwater pump. This can be done in adequate time by simply venting the evaporative cooler system to atmospheric pressure and opening valve V-2 (or valves V-2 and V-4,

if necessary). Demineralized water then flows from the head tank through the 2-in. check valve V-56 directly to the evaporative cooler system.

Water is normally added to the demineralized-water head tank through a pneumatically operated control valve (V-55) that is connected to the condensate pump discharge of the reactor steam system. Under emergency conditions, water from the fire-water tank can be added to the demineralized-water tank through a pneumatically operated valve (V-37). The head tank is equipped with an overflow line and a drain line containing a manually operated valve (V-54). In addition, the head tank is protected from vacuum conditions by a line containing a check valve (V-63).

5.6.4. Service-Water System

Most of the experimenters' service-water system, included in Fig. 5.6.4, has been discussed in the previous section. The only part of this system not considered previously is the part that serves the two demineralized-water coolers. The service water flow to each of the demineralized-water coolers is approximately 70 gpm. The water is taken from one of the two 10-in. service-water supply pipes and is discharged to one of the 10-in. service-water return lines. Both the feed and discharge lines contain manually operated globe valves (V-25 and V-27). The desired flow rate through each cooler is obtained by throttling the flow through valve V-27.

The service-water side of each cooler contains vent and drain valves (V-29 and V-30). The cooler is protected from overpressures by a relief valve (V-28). In case the service-water system fails, emergency cooling water can be supplied at essentially the same flow rate through manually operated gate valve V-31 and automatically operated valve V-32. Valve V-32 is a pressure-regulating valve which opens when the service-water system pressure drops to some preset value. Check valve V-26 is provided to prevent backflow through the service-water supply lines. The pressure sensor for valve V-32 is connected behind check valve V-26 so the pressure regulating valve will remain open as long as the service water pressure is abnormally low.

5.6.5. Emergency-Cooling-Water System

The experimenters' emergency-cooling-water system, shown in Fig. 5.6.4, supplies emergency cooling water to the main loop condensers and the demineralized-water coolers. The emergency cooling water for the main loop condensers is added to the 14-in. service-water feed line by means of a 3-in. line containing a manual gate valve (V-34) and a pressure-regulating valve (V-35). The emergency water flow to the loop condensers is approximately one-tenth of the normal flow. A 10-in. check valve (V-33) is installed in the main service-water line upstream of the emergency-cooling-water connection to prevent backflow through the pipe.

UNCLASSIFIED
ORNL-LR-DWG 58364

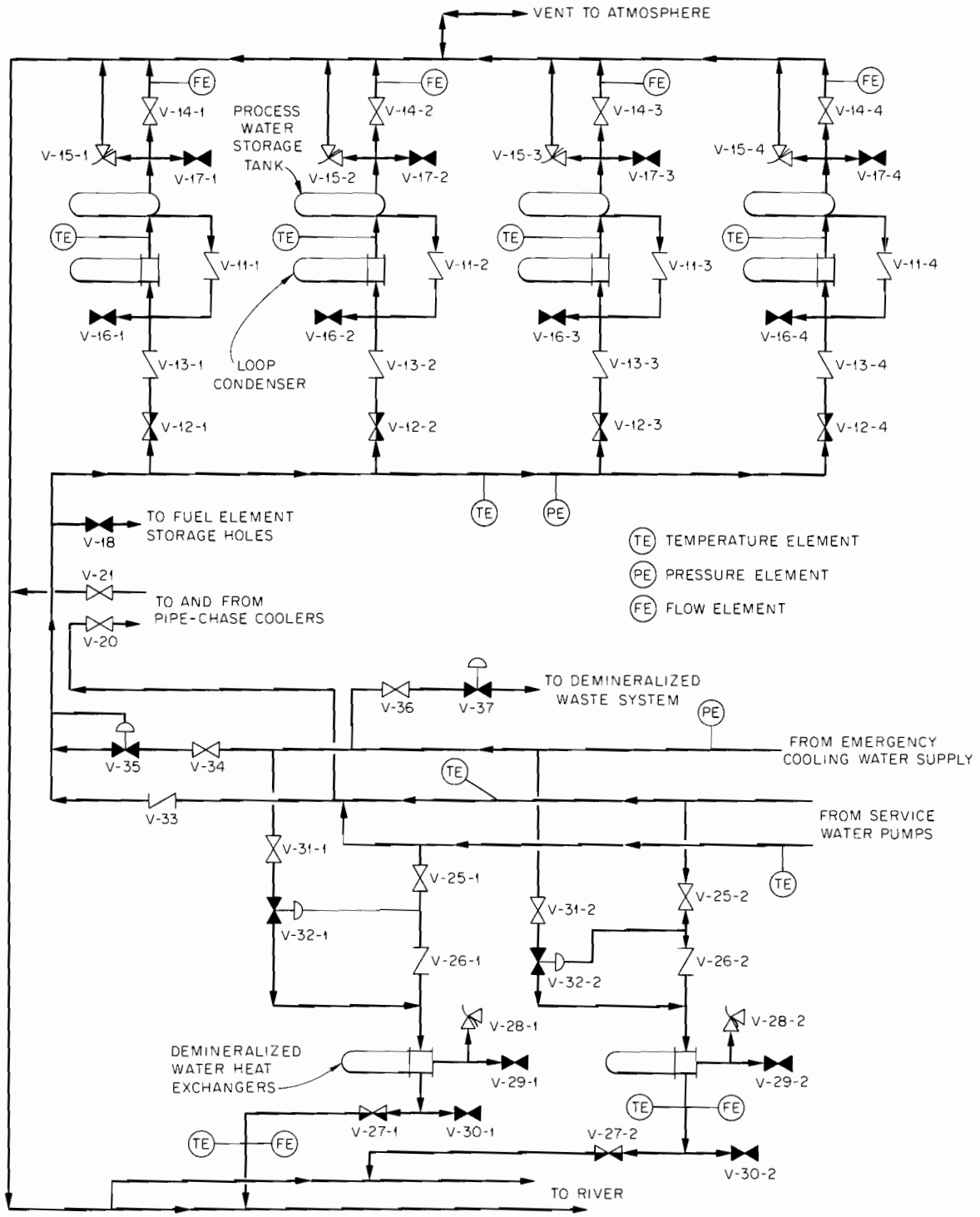

Fig. 5.6.4. Service-Water and Emergency-Cooling Water Systems.

If a low flow of demineralized cooling water threatens the experimental loop, it will be possible to feed emergency cooling water directly into the demineralized-water system through a 2-in. line containing the manual globe valve V-36 and the pneumatically controlled valve V-37. This procedure will be used only in the event of an extreme emergency where loss of demineralized cooling water is likely to result in a meltdown of the experimental fuel assembly. If used, the emergency cooling water is likely to deposit scale and corrode those components normally cooled by the demineralized-water system. The operation of valve V-37 will be left to the operator's discretion.

The portion of the emergency-cooling-water system serving the demineralized-water coolers was discussed previously. The portion serving the motor-generator clutches is shown in Fig. 5.6.5.

5.6.6. Auxiliary Service-Water System

The experimenters' auxiliary service-water system is located in the experimenters' utility tunnel. This service-water system supplies cooling water for the in-cell space coolers, the cooler in the helium supply system, and the motor-generator clutches. In addition, the system provides water to the cell washdown system when it is in operation. The water for the motor-generator clutches, the helium cooler, and the cell washdown system is piped from the utility tunnel to the experimenters' crane bay. The maximum cooling-water requirement for the cell coolers is approximately 40 gpm/cell or a total of 160 gpm if all cells are operating. The maximum flow requirement for cooling the motor-generator clutches is estimated to be approximately 10 gpm/unit or a total of 120 gpm if all loops are operating. The flow to the cell washdown system, when in use, is approximately 20 gpm. The flow to the helium cooler is estimated to be approximately 3 gpm.

A schematic flowsheet of the auxiliary service-water system is shown in Fig. 5.6.5. Service water is supplied to the experimenters' utility tunnel by means of a 4-in. line. A similar 4-in. line returns the flow to the EGCR main river water exhaust lines. The piping to the crane-bay area consists of 3-in. supply and discharge lines. The water flow to the jet pump in the cell washdown system passes through a manually operated globe valve (V-80). The flow to and from the helium cooler passes through manually operated isolation valves (V-81 and V-82). The water to and from the motor-generator clutches also flows through manually operated isolation valves (V-83 and V-84). Both of the 4-in. service-water lines can be drained to the experimenters' utility tunnel via drain valves V-85 and V-86.

The cooling water flow to the two cell coolers passes through a manually operated globe valve (V-72) to a header pipe where the flow branches to each cooler. During loop operation with CO_2 as the loop coolant, the cooling water flows through the manually operated block

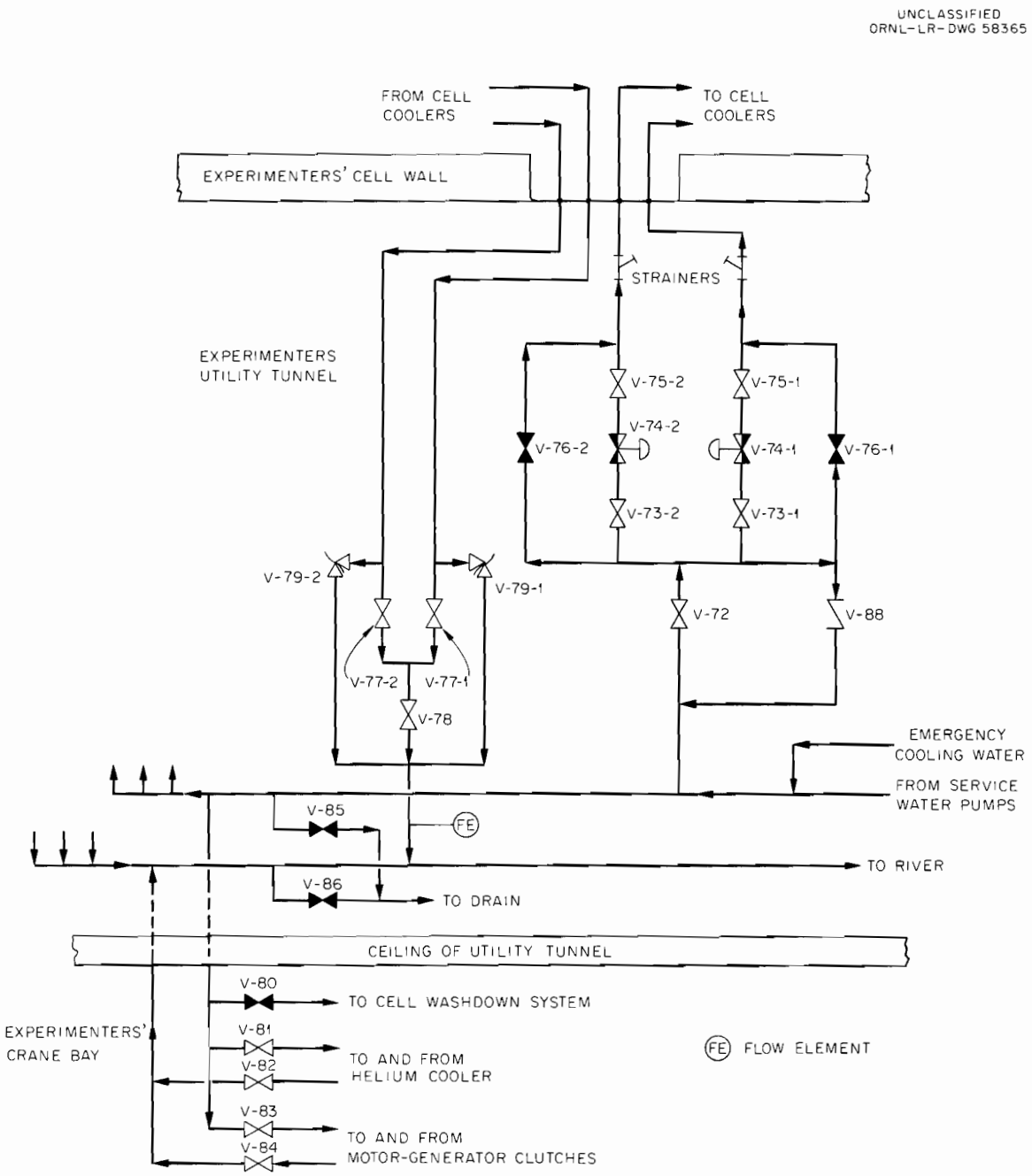

Fig. 5.6.5. Auxiliary Service Water System.

valve V-72 to the pneumatically controlled globe valve V-74. Valve V-74 is used to throttle the cooling water flow to the in-cell coolers in an attempt to maintain the cell temperature above 88°F to prevent CO_2 condensation in certain high-pressure piping. After passing through valve V-74, the flow passes through another block valve (V-75) to a strainer at the point where the water system piping enters and leaves the cell.

During loop operation with helium as the loop coolant, valve V-74 is bypassed by closing valve V-73 and opening valve V-76. No attempt will be made to control the cell temperature during loop operation with helium as the loop coolant. The return lines from the in-cell coolers to the exhaust header contain manually operated globe valves (V-77 and V-78).

The water lines to and from the cell coolers are protected from excessive hydrostatic pressures resulting from possible thermal expansion of the water when the valves are closed. Check valve V-88 protects the lines between valves V-72, V-73, and V-76. The piping inside the cell is protected by relief valve V-79.

5.6.7. Instrumentation

The instrumentation required for proper operation of the various cooling-water systems is shown in Figs. 5.6.1 through 5.6.5. The instrumentation symbols indicate what measurements will be made but not the details of the monitoring and control systems. Unless otherwise specified, all measurements are transmitted to the experimenters' control board.

The mainstream gas-cooling system is basically controlled by the loop-gas temperature at the outlet of the evaporative cooler. This temperature is compared with the desired outlet temperature specified by the experimental loop operator, and the resulting signal is sent to throttling valve V-1, which adjusts the condensate flow to the cooler. A number of measurements are made on the evaporative cooler steam system shown in Fig. 5.6.1. These include the temperature of the tube sheet inside the cooler, the pressure and temperature of the steam system, the level of the condensate in the condensate storage tank, and the radiation level of the condensate. An indication of high tube sheet temperature, high system pressure and/or temperature, high radiation level, and high or low condensate levels actuates audible and visible alarms to alert the loop operator.

Two special instruments (designated XE) are shown connected to the loop condenser and condensate storage tank. These instruments detect the buildup or presence of noncondensible gases in these components. Each instrument consists of a thermocouple inside a small chamber which is open to the steam system on the inside and is air-cooled on the

outside. Steam entering the chamber condenses and drains back into the condenser or condensate storage tank while being replaced by more steam. During this process, the thermocouples essentially read the steam saturation temperature. If noncondensibles become trapped in the chamber and thereby block off the entry of more steam, the chamber will approach the ambient air temperature. These instruments thus provide the loop operator with a means of detecting the presence of noncondensibles in the system and offers a means of determining the rate of gas leakage into the system.

The only instrumentation provided for the blowdown system is mounted on the blowdown condensing tank. This tank is equipped with a thermocouple well and a water-level monitor. High water temperature and/or high or low water level in the tank activates audible and visible alarms at the experimenters' control board.

Measurements made on the service-water system are indicated in Fig. 5.6.4. They include temperatures of the service water entering the reactor containment vessel, discharge water temperature and flow rate from each demineralized-water cooler, system pressure of service and emergency water supplies at the headers on the sixth floor, temperatures of the service water to and from each loop condenser, and the flow rate from each loop condenser. Exit temperatures higher than 150°F from any of the demineralized-water coolers or loop condensers, zero flow through any operating component, or loss of service or emergency water pressure at the sixth floor actuates visible and audible alarms in the experimenters' control room. Loss of service-water pressure initiates a normal reactor shutdown.

The demineralized-cooling-water supply system (Fig. 5.6.2) is equipped with several monitoring instruments. These include a level gage and a radiation monitor in the demineralized-water head tank, temperature monitors for the demineralized water entering and leaving the demineralized-water coolers, a flow indicator on the inlet line to the feedwater pump providing makeup water to the evaporative cooler steam system, a thermocouple well in the supply line to the primary in-cell cooling system, and flow meters on the discharge line from each circulating pump. A low flow from either circulating pump, a high outlet temperature from either demineralized-water cooler, or a high radiation level at the demineralized-water head tank actuates visible and audible alarms at the experimenters' control board. If the water level in the demineralized-water head tank drops below a preset level, it initiates an alarm at the experimenters' control board and automatically attempts to restore the water level by opening valve V-55, thereby adding makeup from the condensate pump discharge of the reactor steam system. If the level continues to drop, it will initiate a reactor shutdown by a motor-driven rod insertion. At the same time, the loop operator may at his own discretion open valve V-37 to restore the water level by adding raw water from the emergency water supply.

The instruments provided for the demineralized-cooling-water system for in-cell components are indicated in Fig. 5.6.2. The discharge water temperature and flow rate are monitored from each component in the experimenters' cell. The condition of high discharge temperature or low flow rate from any unit activates audible and visible alarms at the experimenters' control board. The flow rate for each unit is not transmitted to the control board; the meter mounted on the equipment has a low-flow contact switch that warns the loop operator of the low-flow condition. Loss of cooling water flow to the auxiliary blower initiates a reactor shutdown by a motor-driven rod insertion. The sump tank is equipped with two level switches: one to warn the loop operator of an abnormally high water level in the tank and a second to warn of low level. Motion operators are mounted on each float valve to detect whether the float is operative.

Only one instrument is indicated for the auxiliary service-water system in the experimenters' utility tunnel. This instrument is a flow meter that monitors the cooling water flow from the cell coolers. Since the cooling water flow to the coolers may be throttled to zero during loop operation with CO_2, no alarms are connected to the flow meter.

The instrumentation for the pipe-chase cooling system, the helium cooler, and the cooling system for the motor-generator clutches is not shown because the system designs have not progressed to the point where the instrumentation requirements can be identified.

5.6.8. Hazards

The hazards introduced by malfunction of the water systems are covered in Section 10.5.

5.6.9. Project References

Design Criteria (CF 61-6-3)	
Criteria for the Loop Cooling Water Systems	Code B.2.3 and C.4.0
Preliminary Design Drawings (CF 61-6-2)	
Process Flow Sheet, Demineralized-Water System	D-RD-10110
Process Flow Sheet, Loop Cooling System	D-RD-10230
Instrument Diagram, Demineralized-Water System	Q-2120-20, 21
Instrument Diagram, Loop Cooling-Water System	Q-2120-18

5.7. Electric Power Systems

5.7.1. Function

The function of the electric power system for the EGCR experimental facilities is to provide dependable electric power to a wide variety of instrumentation, control, and power equipment associated with the operation of the experimental loops.

5.7.2. Equipment Description

Substation. The substation for the experimental facilities consists of three separate sections of outdoor unit-type switch-gear, each composed of a primary supply disconnect switch, a transformer, a transformer secondary air circuit breaker with indicating and integrating instruments, and several branch feeder air circuit breakers for the various loads. The primary supply is 13.8 kv, 3 phase; and the secondary is 480 v, 3 phase.

Motor-Generator Sets. Electric power to drive the three loop compressors in each experimenters' cell is provided by individual motor-generator sets to each compressor. These motor-generator sets have a variable frequency output, as required to vary the compressor speed. The generator speed (frequency) is controlled by regulating the slip of a magnetic clutch connecting the motor to the generator. The motor-generator sets are sized to start and continuously run the loop compressors at the maximum design loading of the compressors.

High-Current Transformer and Saturable Reactor. The mainstream gas heater (see sec. 4.6) utilizes high-current direct-resistance heating of a section of the mainstream loop piping as a means of preheating the loop and performing other heating operations. The electric power for this heater is supplied from a high-current single-phase transformer rated at a maximum of 20 000 amp at 12 v (240 kva). A saturable reactor is provided ahead of the transformer to permit the heater power input to be controlled by a signal from the experimenters' control system or panel.

Miscellaneous Equipment. Other items of equipment for the experimental facilities which are supplied by the experimenters' power supply system include (1) a demineralized-water pump, (2) gas transfer pumps, (3) cell ventilation system fans, (4) solenoid and motor-operated valves, and (5) auxiliary blowers.

5.7.3. Design Philosophy

Electric Service Continuity. It is recognized that operation of a complex nuclear experimental facility requires a continuous power

supply for certain critical control and heat-removal systems. Therefore, the electrical system must be designed for maximum reliability and must be backed up with emergency power supply sources to protect equipment and personnel in the event of a power supply failure. The EGCR electrical system has been designed on the basis of these criteria.

Existing Electrical System. The Oak Ridge plant area is served by an interconnected 154-kv distribution network fed by transmission lines from all TVA generating stations in the East Tennessee area.

For maximum operating stability and reliability, the plant area 154-kv distribution network is protected by a high-speed relaying system. This system instantly removed any faulted line or equipment from the remainder of the network and minimizes the disturbance. A similar, but less complicated, relaying system operates to protect the ORNL, K-25, and Y-12 main 13.8-kv busses. The 13.8-kv line from the EGCR to the ORNL main substation is protected at both ends by this type of relaying system.

5.7.4. History of Power Interruptions

In order to evaluate the degree of reliability of electric service for the EGCR Project, a history of electric service interruptions in the Oak Ridge plant area is given in Table 5.7.1.

5.7.5. Electrical System Improvements

A reliability improvement program on the 154-kv system was carried out from 1950 through 1955. Further improvements are scheduled for the near future. Among these will be changes in the supply to the ORNL main substation. These changes will include building a second 154-kv feeder from the K-25–Elza tie line switching station in Bear Creek Valley to the ORNL main substation. The present ORNL feeder to this switching station will be permanently connected to the K-25 line, and the new feeder to the switching station will be permanently connected to the Elza line. The present feeder from the switching station will continue to supply the present main transformer at the ORNL main substation, and the new feeder line from the switching station will supply a new transformer now being installed at the ORNL main substation. The two lines may be tied together by means of a circuit breaker at the ORNL main substation.

On the ORNL 13.8-kv system, a new 13.8-kv bus associated with the new main transformer may be paralleled with the bus associated with the present older main transformer by means of a circuit breaker.

Table 5.7.1. Electric Service Interruptions in the Oak Ridge Plant Area

Date	Nature of Interruption
	On the 154-kv System
7/2/50	Total outage of Oak Ridge area
11/19/54	All of Elza substation and Y-12 out
11/22/54	Elza–K-25 tie line out
4/18/55	No. 1 Y-12 feeder out
12/23/55	No. 1 Y-12 feeder out
	On the ORNL and Y-12 13.8-kv Systems
7/2/50	Failure of all 154-kv service
5/10/52	ORNL bus, secondary breaker opened
7/17/53	ORNL bus, secondary breaker opened
11/11/53	Low voltage on 154 kv, some ORNL load lost
11/19/54	Accident at Elza, 154-kv bus, all Y-12 out
11/22/54	Failure of 154-kv supply, ORNL out
4/18/55	Y-12 154-kv feeder No. 1 out, buildings 9201-2, -3, -4 out
11/17/55	ORNL bus, secondary breaker opened
12/23/55	Y-12 154-kv feeder No. 1 out, buildings 9201-2, -3, -4 out
9/10/60	ORNL bus, secondary breaker opened
9/11/60	ORNL bus, secondary breaker opened

5.7.6. EGCR Power Supply

From Table 5.7.1 it will be noted that there has not been a simultaneous outage of both the ORNL and Y-12 systems since 1950. Therefore, an alternate source of power for the EGCR experimental facilities originating at a Y-12 13.8-kv bus appears to offer continuous service or, at worst, power interruptions of momentary duration.

The construction of such an alternate supply line, originating at the Y-12 9201-4 building 13.8-kv bus is planned. This particular source appears advantageous because it may be supplied from adjacent buildings, thus increasing service reliability. From Y-12, this line will approach the EGCR on a route widely separated from the 13.8-kv line from EGCR to the ORNL main substation so that both lines will not be affected by one lightning disturbance. This new overhead line from Y-12 will terminate at a point approximately 500 ft from the ORNL 13.8-kv line and continue underground to the EGCR site.

At the EGCR it is planned that power for the experimental facilities will be supplied partly from the EGCR bus, which connects to the ORNL 13.8-kv line, and partly from the new Y-12 line; for instance, of the three motor-generator sets for the loop compressors, one will be

supplied by the EGCR bus, one by the new Y-12 line, and the third by a remotely operated throwover arrangement that can draw power from either source (the EGCR bus being preferred). In this way, a power interruption on either source will permanently stop only one of three motor-generator sets. A similar arrangement is planned for the demineralized-water pumps and the instrument and control power.

Control and overload protection for the various experimental facility loads will be provided by circuit breakers mounted in unit-type switchgear. The circuit breakers will have sufficient interrupting capacity to separate any faulted feeder without affecting other loads.

As stated above, the loss of electric supply from either the EGCR bus or from the new Y-12 line will permanently shut down one loop compressor motor-generator set in each experimenters' cell. By speeding up the remaining two generators, the experimental loop gas flow rate will remain unchanged. A complete loss of the EGCR bus will cause a reactor shutdown of an automatic motor-driven rod insertion.

If a rapid depressurization of an experimental loop should occur, it is credible that the gas-lubricated compressor bearings may fail (see sec. 4.9). Since the natural convection of the remaining loop gas at atmospheric pressure is not adequate to cool the test fuel element, it is necessary to start up an auxiliary blower at once to take care of the afterheat. A reliable control and power supply system for this blower is still under study.

5.7.7. Emergency Power Supply

As discussed previously, a very high degree of reliability has been built into the power supply system for the EGCR experimental facilities by providing two 13.8-kv power supplies to the EGCR site. The only experimental facility system backed with an additional power supply is a part of the instrumentation and control system. This additional power system consists of (1) a rectifier normally supplied from the EGCR bus, but with a throwover arrangement for drawing power from the new Y-12 line, (2) a dc motor, ac generator set to supply ac control power from the rectifier, and (3) a storage battery floating on the circuit between the rectifier and the dc motor. If the ac power from both power sources should fail, the storage battery will continue powering the motor-generator set. This system will supply power to radiation monitors and other critical instruments and controls requiring an uninterrupted power source.

5.7.8. Project References

Preliminary Design Drawings (CF 61-6-2)

On-Line Diagram — Experimenters' Cells	D-39740
Oak Ridge Area 154-kv Electric Distribution System	D-42826

Plan — Motor-Generator Sets	D-42827
Floor Plan and Details	D-42828
Specifications (CF 61-6-5)	
Unit Type Electrical Substation Equipment	JS-128-105
200-Cycle Motor-Generator Set with 200 hp Motor and a 150 kva Generator for EGCR Loop	JS-128-104

5.8. CO_2 Supply System

5.8.1. Function

The function of the CO_2 supply system is to provide gaseous CO_2 to the gas distribution system (see sec. 5.10) for use in the experimental loops. The CO_2 delivered to the system will be Coleman Grade, with a purity rated at 99.99% by volume. The dew point will be −30°F or lower. The impurity analysis will be as shown in Table 5.8.1. The CO_2 will be required for filling the loop, pressurizing the through-tube, filling the gas storage tanks, and supplying the buffer gas system.

Table 5.8.1. Impurities in Coleman-Grade Carbon Dioxide

Impurity	Parts per Million by Volume
CO	<10
O_2	<20
N_2	<80
SO_2	<5
H_2S	<5
Oil	<5

5.8.2. Principles of Operation

Liquid CO_2 will be transported to the EGCR site by truck. A hose will be run from the truck to the fill connection on the CO_2 bulk liquid storage tank. Normal operation of the system may be continued while the liquid storage tank is being filled.

A schematic diagram of the CO_2 supply system is shown in Fig. 5.8.1. The entire system will be housed in a shed that is a radial extension of

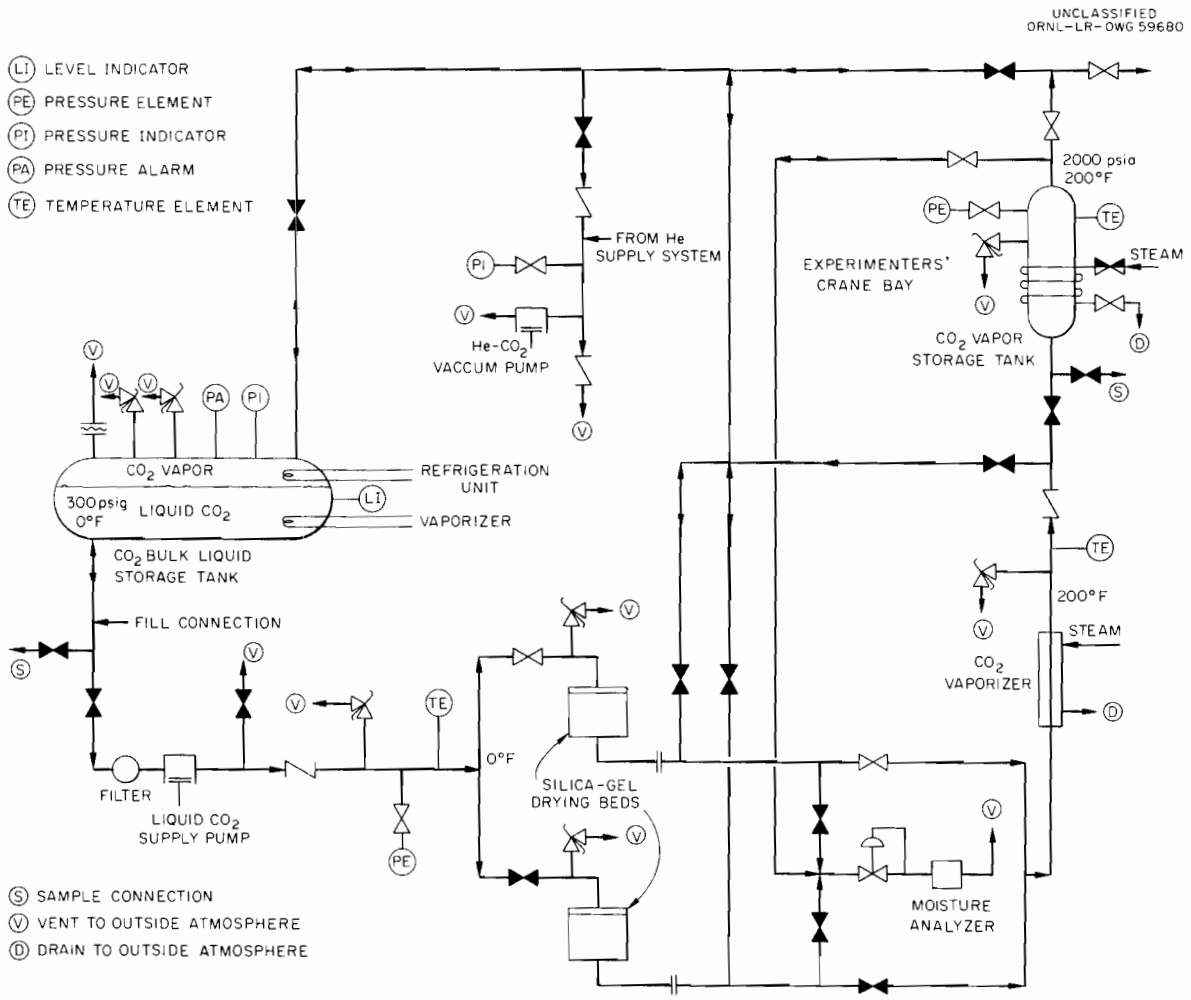

Fig. 5.8.1. CO_2 Supply System.

the experimenters' crane-bay enclosure. To fill the CO_2 vapor storage tank, liquid flows at 0°F from the bulk liquid storage tank through a filter to the liquid CO_2 supply pump. This positive-displacement (diaphragm) pump then delivers liquid CO_2 to the inlet of the silica-gel drying beds at a significantly higher temperature (since the compression process is neither reversible nor adiabatic). The moisture content of the liquid CO_2 is reduced by passing through one of the paralled-connected silica-gel beds. Upon leaving the silica-gel bed, the liquid CO_2 is vaporized (normally without boiling taking place) in a steam vaporizer by a constant-pressure heating process. Dry CO_2 vapor is then delivered to the CO_2 vapor storage tank from which it may be withdrawn directly for various loop uses. The liquid CO_2 supply pump, the CO_2 vaporizer, and the silica-gel drying beds are sized to provide at least two loop fills of dry vapor in an 8-hr period of time.

It should be noted that CO_2 liquid, rather than vapor, is passed through the silica-gel beds. This is done in order to arrive at the vapor storage tank state point of 2000 psia and 200°F without using a high-pressure gas compressor. Although CO_2 vapor could have been passed through the silica-gel beds and then compressed, the vapor compression process would have resulted in temperatures far in excess of 200°F. A cooler would have been required, and the power requirements and size of the compressor would greatly exceed those of the liquid pump. The compressor would have to be downstream of the silica-gel beds, since silica gel is not very effective at temperatures in excess of 80°F.

If it becomes necessary to drop the vapor storage tank pressure to a value below the required buffer gas pressure (see sec. 5.11), the buffer gas requirements will be met by connecting a gas bottle to the emergency connection in the gas distribution system or by starting the liquid supply pump and bypassing the vapor storage tank.

Various lines are shown leading to the He-CO_2 vacuum pump. Two of these lines come from the outlets of the silica-gel beds. After replacement of the silica gel, it will be necessary to draw a vacuum on the bed and adjacent piping to eliminate air. Dry CO_2 vapor must then be bled back through the outlet of the CO_2 vapor storage tank to the drying bed. This is necessary because the discharge of liquid directly (on pump startup) to a region at a vacuum would otherwise result in flashing to dry ice and possible plugging.

Additional vacuum lines are shown at the outlet of the CO_2 vaporizer and at the outlet of the CO_2 vapor storage tank. These lines permit air removal following maintenance on either unit. Following maintenance on the vaporizer it may be necessary to evacuate and then refill with dried vapor from the vapor storage tank. Following maintenance on the vapor storage tank, it may be necessary to evacuate and then refill with vapor (not dried) from the liquid storage tank. This vapor may then be dried

by recirculation from the liquid storage tank through the silica-gel beds, the vaporizer, and the vapor storage tank and back to the liquid storage tank. This recirculation method may be used any time excessive moisture is found in gas samples from the vapor storage tank.

The vapor storage tank is wrapped with low-pressure steam lines to maintain a 200°F gas temperature or higher to assure that solid and/or liquid CO_2 does not form when CO_2 vapor is throttled from high pressure to low pressure. In addition, the lines from the vapor storage tank to the gas distribution system are steam traced. The vapor storage tank is insulated over the steam lines so that it is only necessary to condense sufficient steam to make up for heat losses through the insulation. Because of the low steam flow rates required, condensate will be discarded rather than run back to the source.

5.8.3. Components

CO_2 Bulk Liquid Storage Tank. Two different units are being considered for use in this system. One unit is produced by the Cardox Division of Chemetron Corporation; the other is produced by the liquid Carbonic Division of General Dynamics Corporation. Both are basically the same as far as refrigeration, vaporizing, safety devices, instrumentation, and filling. Since the units are loaned rather than bought, no changes to the unit may be made.

Both units are designed to hold the CO_2 temperature to 0°F. Each unit includes a vaporizer and a refrigeration unit. Both units are provided with pressure indication, pressure alarm, and level indication. Each unit has at least two pressure-relief valves and each unit has one rupture disk set well above the relief valve settings. The CO_2 bulk liquid storage tank selected will have a capacity of at least 2 tons of liquid CO_2. This will be sufficient for at least seven loop fills to 1000 psia.

Liquid CO_2 Supply Pump. The liquid CO_2 supply pump is a positive displacement pump designed to pass approximately 3 lb/min of liquid. Suction pressure will vary from 275 to 325 psig. Discharge pressure will vary from 275 to 1985 psig.

Silica-Gel Drying Beds. The two silica-gel drying beds are connected in parallel. Only one bed will be used at a time. The other bed may be isolated and removed for replacement of the silica gel. The silica gel will not be revivified because the cost of the required equipment cannot be justified by the small amount of silica gel used for each loop fill. No interference with normal system operation is required during the silica-gel replacement.

Preliminary estimates of the size of bed required are reported elsewhere.[5] The silica-gel beds used in the helium supply system (see sec. 5.9) are identical and therefore interchangeable. The specified flow rate was reduced from that indicated by Anderson[5] because there appears to be no need to provide more than one loop fill of dried vapor in 4 hr. The sizes of the pump, drying beds, and vaporizer are therefore kept smaller.

CO_2 Vaporizer. The CO_2 vaporizer is designed for a heat transfer rate of approximately 25 000 Btu/hr. This requires a steam flow rate of approximately 26 lb/hr. When operating above the critical pressure of CO_2, the vaporizer will take compressed liquid and deliver superheated vapor with no discontinuity (boiling will not take place). At pressures below the critical pressure the vaporizer acts as a CO_2 boiler. The vapor storage vessel pressure will be permitted to drop below the critical pressure during loop filling.

Low-pressure steam is used as the hot fluid in the vaporizer. Temperature control problems are thus minimized, since it is only necessary to supply enough steam to obtain a CO_2 outlet temperature of 200°F with a CO_2 inlet temperature of 0°F. Since the positive displacement pump is a metering type of pump, the CO_2 flow rate (and thus the heat load) should not vary much. If more than the required amount of steam were supplied at 5 psig (saturation temperature of 228°F) and the heat transfer temperature differential was 10°F, the highest CO_2 temperature leaving the vaporizer would be 218°F. A temperature of 218°F would reduce vapor storage capacity somewhat but would not otherwise affect system performance. The system operation appears satisfactory even with no temperature control.

CO_2 Vapor Storage Tank. The CO_2 vapor storage tank has a capacity of approximately 65 ft^3. This will provide one loop fill to 1000 psia with an isothermal drop in storage pressure from 2000 psia to 600 psia at 200°F. It is not necessary, therefore, to process additional CO_2 while filling a loop. The operator may add CO_2 to the vapor storage tank while filling the loop, if desired. The tank is wrapped with low-pressure steam lines and covered with insulation in order to maintain the gas at 200°F.

The highest pressure requirement for CO_2 vapor is for the buffer gas system. For a 1000 psia loop, 1100 psia vapor will be required. The CO_2 vapor storage tank will normally be filled to 2000 psia.

He-CO_2 Vacuum Pump. A vacuum pump is required for use with both the helium supply system and the CO_2 supply system. This pump will be used during initial filling of the system, during silica-gel replacement, and after any maintenance operation that requires opening of the system. After opening any section of the system to the atmosphere,

---

[5]F. A. Anderson, Use of CO_2 as a Coolant in EGCR Test Loops, ORNL CF 60-9-20, Sept. 9, 1960.

that section should be evacuated and then refilled with dry gas or filled with moist gas followed by a drying operation.

Valves. All valves will have soft seats. Valves downstream of the liquid supply pump and valves in the vacuum lines may see a 2000-psia differential pressure for long periods of time. Vent and drain valves will be included as required for cleaning the system prior to initial filling and following maintenance. Since the system supplies CO_2 vapor to each experimental loop and to each buffer gas system (where tightness of valves is imperative) cleanliness is vital.

Overpressure Protection. Carbon dioxide poses some unusual problems in overpressure protection. Relief of high-pressure liquid CO_2 to atmospheric pressure results in the formation of dry ice. Where large amounts of liquid are relieved, there exists a definite possibility of plugging the relief-valve outlet. Liquid-relief valves are included on the discharge of the liquid supply pump and at each silica-gel bed. These relief valves are intended to protect against overpressure resulting from closure of valves at each end of a line containing 0°F liquid followed by heating of the liquid. Under these conditions only a small amount of liquid must be relieved to protect the system. The liquid supply pump is provided with an internal relief valve to protect against overpressure resulting from operation of the pump with the discharge line closed off. Vapor-relief valves are provided for the vaporizer and the vapor storage tank.

Instrumentation. The CO_2 bulk liquid storage tank is supplied as an assembly with its own instrumentation. Since the tank is loaned rather than purchased, no changes to the instrumentation are permitted. The tank is provided with a local pressure alarm, pressure indication, and level indication.

Indicators are provided for the remainder of the system. The supply pump discharge pressure is indicated locally, and there is a local high-pressure alarm. The silica-gel bed inlet temperature is indicated locally, and there is a local overtemperature alarm. The moisture content of the CO_2 at the silica-gel bed outlet and the vapor storage tank outlet is indicated and alarmed locally, and there is also a remote alarm. The CO_2 temperature from the vaporizer is indicated locally, and there is a local overtemperature alarm. The vapor storage tank temperature is indicated locally, and there are local and remote overtemperature and undertemperature alarms. The vapor storage tank pressure is indicated locally, and there are local and remote overpressure and underpressure alarms. The vacuum pump is equipped with a local pressure indicator.

Filter. A filter is provided at the inlet of the liquid supply pump. It should be noted that two additional filters are provided in series as a part of the gas distribution system (see sec. 5.10) upstream of the takeoff points for loop filling, through-tube pressurizing, gas storage tank filling, and buffer gas supply.

5.8.4. Design

All lines and equipment are designed for 2400 psia at 250°F, except the liquid storage tank and the vacuum pump equipment downstream of the inlet stop valve. All piping other than instrument lines is 1-in., sched.-80, ASTM A106B carbon steel pipe. All lines are insulated either to minimize heat loss or to assure that moisture does not freeze on cold lines.

5.8.5. Hazards

Failure of any portion of the system will not result in any hazards to the loops. In addition, all portions of the system will be accessible at all times for maintenance or repair. A loss of the vapor storage tank may cause a delay in filling the loop, but no hazard. The valving arrangement permits supplying CO_2 to the gas distribution system without passing it through the vapor storage tank. As mentioned earlier, gas bottles will be available within the experimenters' utility tunnel for supplying the buffer gas supply if the CO_2 supply system becomes inoperative.

All CO_2 vents, drains, and relief valves will discharge to the outside atmosphere to prevent asphyxiation.

5.8.6. Project References

Design Criteria (ORNL CF 61-6-3)	
CO_2 Supply System Criteria	Code C.5.0.1
Preliminary Design Drawings (ORNL CF 61-6-2)	
Process Flowsheet, CO_2 Supply System	D-RD-10111
Instrument Diagram, CO_2 Supply System	Q-2120-14

5.9. Helium Supply System

5.9.1. Function

The function of the helium supply system is to supply helium of the correct purity, quantity, and pressure to the gas distribution system (see sec. 5.10) for use in the experimental loops. The helium supply will be U. S. Bureau of Mines grade A, purity rated at 99.995% by volume. This gas will be delivered to the helium supply system by a bottle trailer from the Y-12 Bulk Helium Station.

The helium supply contaminants vary considerably depending upon the location of the natural gas source from which the helium was extracted. Normally, the total contaminants will be approximately 20 to 25 ppm by volume. Hydorgen is analyzed only to an accuracy of 10 ppm but is probably present in an amount less than 1 ppm. The neon content is always less than 20 ppm but is usually 10 to 15 ppm. There is probably less than 1 ppm CO_2. The moisture content is normally about 10 ppm. It should be noted that during the helium separation process the helium is passed through activated charcoal and cooled to about −320°F. Most of the moisture is therefore admitted during subsequent handling of the helium. With the exception of moisture, the contaminant quantities given above are acceptable. The moisture content will be reduced to less than 1 ppm by volume by passing the gas through silica gel before it enters the gas distribution system.

The bottle trailers presently in use at ORNL for helium service have physical volumes of approximately 264 ft^3 per trailer and are pressurized to approximately 2000 psia. With cold loop filling (see sec. 5.13), more than four loop fillings of helium (for 1000-psia operation) may be obtained from one bottle trailer.

Helium will normally be supplied to the helium distribution header of the supply system at pressures of 1200 to 2000 psia. This high pressure is necessary to satisfy the requirements of the buffer gas system. During cold loop fillings, the helium header pressure will be temporarily dropped to well below 1200 psia.

5.9.2. Description

The helium supply system basically consists of a bottle trailer, a cooler, and two silica-gel beds. The cooler and silica-gel beds and associated piping will be housed in a shed to be built as a radial extension of the experimenters' crane-bay enclosure (which also houses decontamination equipment and the CO_2 supply system). The helium bottle trailer will be parked immediately adjacent to the shed. As shown in Fig. 5.9.1, the helium will flow from the bottle trailer through the cooler and then through one of two parallel-connected silica-gel beds. Since the moisture adsorption capacity of the silica gel is highly temperature dependent, river water will be used in the cooler to maintain the helium inlet temperature to the silica-gel bed below 80°F when the ambient temperature is high.

During the coupling of the bottle trailer to the permanent piping of the helium supply system, air will be admitted between the trailer manifold outlet isolation valve and the cooler inlet isolation valve (HV-454). Also, the removal and replacement of silica gel will result in the admission of air to the silica gel beds. To facilitate the removal of this source of contamination, vacuum lines connected to a vacuum pump in the CO_2 supply system (see sec. 5.8) are provided.

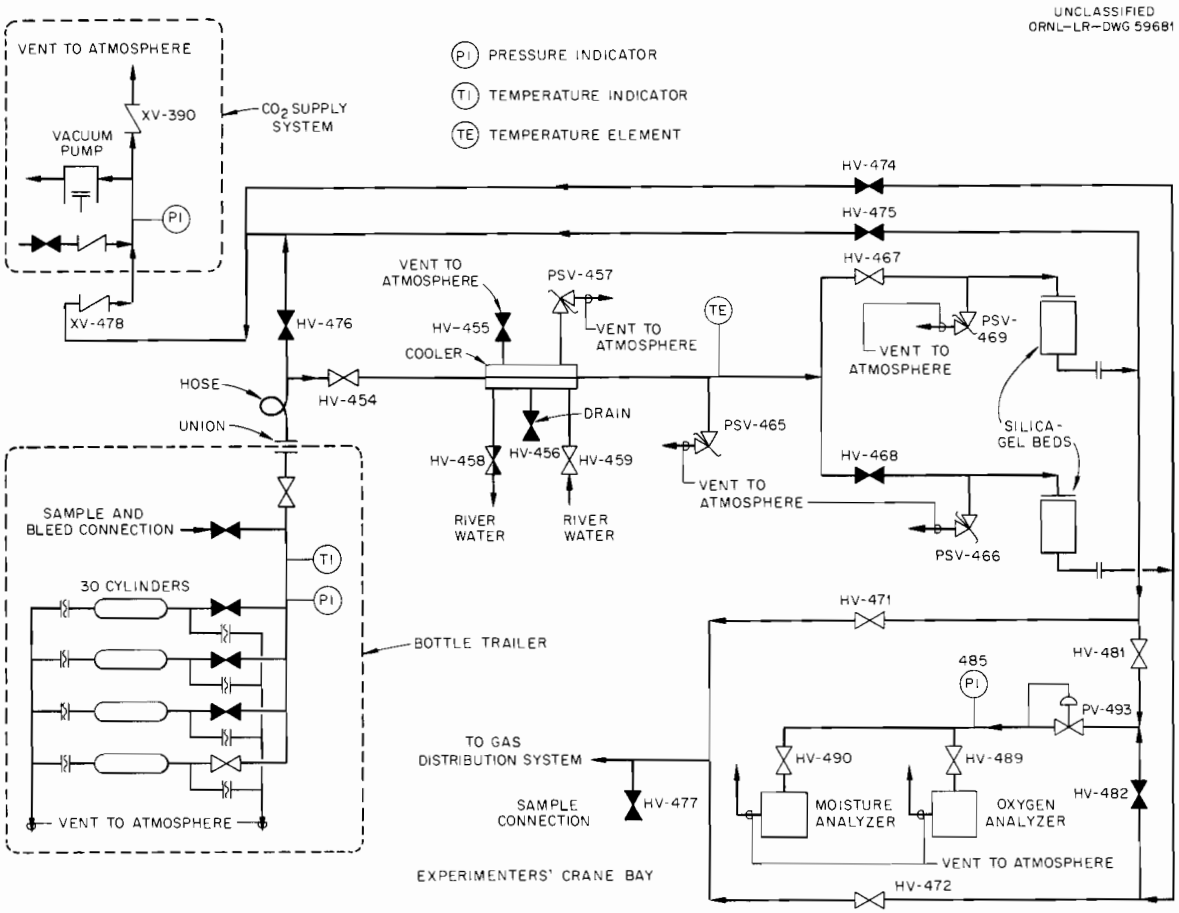

Fig. 5.9.1. Helium Supply System.

The helium supply system is fitted with the rupture disks and relief valves required to provide adequate overpressure protection, plus necessary pressure and temperature instrumentation and sampling equipment (for continuous monitoring of moisture and oxygen).

5.9.3. Operation

The valve positions for normal operation of the helium supply system are as shown in Fig. 5.9.1. Normally, only one cylinder on the bottle trailer is open to the system. Since the flow required is highly intermittent, the cylinder pressure, as indicated locally on the trailer manifold, will normally be equal to the helium distribution header pressure, as indicated in the experimenters' control room. When the cylinder pressure falls to 1200 psia, the cylinder will be isolated and tagged, and a new cylinder will be valved to the system. Those cylinders that are isolated after a drop in pressure to 1200 psia can be used later for a cold loop filling.

A need for use of the helium system cooler will depend upon the ambient temperature. Since there are presently no provisions for heating the experimenters' crane bay, there will be prolonged periods of cold weather during which the river water to the cooler can be shut off.

The two silica-gel beds in the helium supply system are connected in parallel. This permits operation of the system during the removal of a bed for silica-gel replacement. Since the rate of saturation of the silica gel will be low, the silica gel will be discarded after removal, rather than revivified. After replacement of the silica gel, a combination of evacuation to a low pressure and helium purging will be used to remove air and moisture from the silica-gel bed. During evacuation to a low pressure, some of the moisture in the air will solidify on the inner surfaces of the beds. Sufficient evacuation time must be allowed for the latent heat of sublimation to be transferred through the walls of the bed so that moisture will not be retained.

A gas-sampling connection is provided on the bottle trailer for collecting a sample of the helium as delivered. In addition, a continuous sample can be taken from a point downstream of the silica-gel beds and run to instruments for analyzing the oxygen and moisture content. A gas sampling connection (HV-477) is also provided at the connection to the gas distribution system.

5.9.4. Components

Bottle Trailers. The bottle trailer is identical to those presently in use at ORNL for helium service. These trailers carry 30 carbon steel cylinders, each having a volume of approximately 8.8 ft^3, for a total volume of approximately 264 ft^3. The allowable operating pressure when

new is 2400 psia, but the allowable pressures are normally derated with time and wear. This type of trailer is normally used for hydrogen and nitrogen service as well. Each cylinder on the trailer is provided with two rupture disks and an isolation valve. A high-pressure hose will be provided for connecting the high pressure union on the trailer to the permanent piping of the helium supply system.

Silica-Gel Beds. The exact size of the beds has not been established, but preliminary estimates indicate an active bed length of 25 in. and an active diameter of 5 in. will be required. Each bed will be housed in a carbon steel vessel that is flanged to permit removal and replacement of the silica gel.

Coolers. A small cooler with a heat transfer rate of up to 2500 Btu/hr will be needed. The river water flow rate required will be approximately 3 gpm. A vent and a drain will be provided on the shell (river-water) side. This cooler should be a readily available (stock) item.

Instrumentation. The helium temperature out of the cooler must be measured in order to assure a sufficiently low inlet temperature to the silica-gel bed (less than 80°F). Moisture and oxygen analyzers are included at the outlet of each silica-gel bed. The moisture analyzer will be used to indicate when to replace the silica gel. The analyzers are provided with isolation valves (HV-481 and HV-482) from the outlet of each silica-gel bed. A vacuum gage is included at the vacuum pump inlet of the CO_2 supply system. This gage is also used for the helium supply system. Pressure and temperature indications are provided on the bottle-trailer manifold.

Overpressure Protection. Relief valves (PSV-466 and PSV-469) are provided at the inlet to each silica-gel bed. Relief valves (PSV-451 and PSV-465) are also provided on both the shell and tube sides of the cooler. All relief-valve discharges will be routed to a point outside the crane-bay enclosure. Overpressure of the vacuum pump will be prevented by a check valve (XV-390) discharging to the atmosphere.

Valves. All manual valves will be barstock valves.

5.9.5. Design Data

The system will be designed for a maximum working pressure of 2400 psia and a maximum working temperature of 110°F (assumed maximum ambient temperature). All piping will be seamless carbon steel (ASTM A106, grade B). All main helium lines and all vacuum lines will be 1-in. sched.-80 pipe.

5.9.6. Hazards

Since the helium supply system is located external to the loop secondary containment system and contains a clean (nonradioactive) gas, no hazards other than those normally involved in the handling of high-pressure gas should be experienced. The loss of any component within the system will not shut down the loops because an emergency supply of helium will be provided inside the experimenters' utility tunnel. This supply will consist of several bottles which can be connected to an emergency connection in the utility tunnel next to the experimenters' cell (see sec. 5.10). One of the bottles will be used to serve the buffer-gas requirements of all cells whenever the helium distribution header is inoperative.

5.9.7. Project References

Design Criteria (CF 61-6-3)	
Helium Supply System Criteria	Code C.5.0.2
Preliminary Design Drawings (CF 61-6-2)	
Process Flowsheet, Helium Supply System	D-RD-10184
Instrument Diagram, Helium Supply System	Q-2120-13

5.10. Gas Distribution System

5.10.1. Description

The function of the gas distribution system is to distribute helium and CO_2 from the gas supply system to the small experimental loops (TS-2 and TS-3) for the purposes of filling the loop or pressurizing the through-tube, filling the gas storage tanks, supplying buffer gas, and purging the gas sampling station.

The basic system, as shown in Fig. 5.10.1, consists of two gas distribution headers (one for helium, one for CO_2) extending the full length of the utility tunnel and three pressure-reducing stations per each small loop cell (TS-2 and TS-3). Each reducing station is designed to handle either helium or CO_2. In addition, the large experimental loop cells (TL-1 and TL-4) have future supply take-offs from the helium header. These take-offs include the supply valves and terminate at the pipe jumper flanges which are blanked off.

The helium and CO_2 distribution headers receive gas from their respective supply systems in the experimenters' crane bay area (see sec. 5.9). After a transition from the carbon steel pipe of the supply systems to stainless steel pipe, the gas is filtered to remove particulate matter and

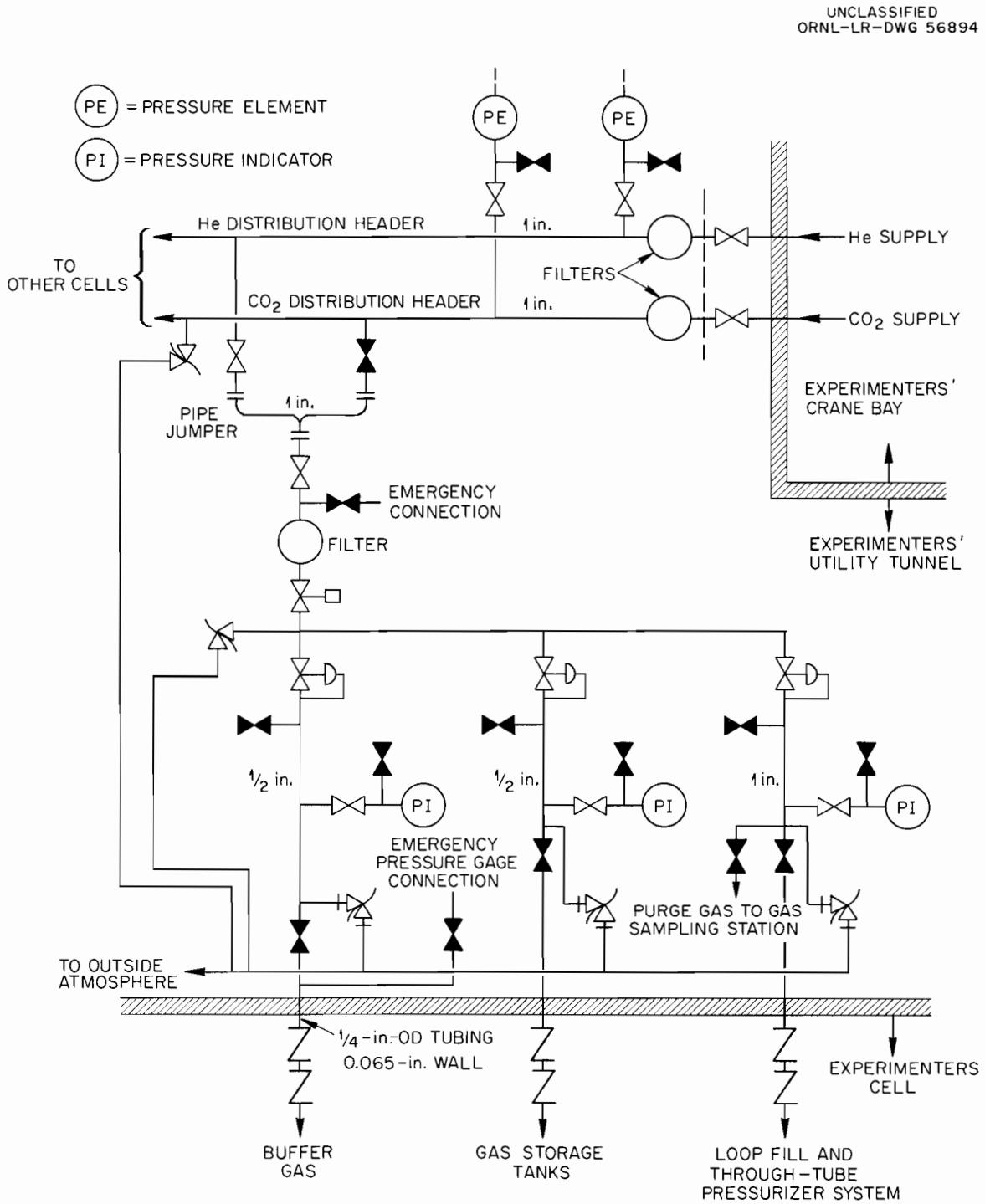

Fig. 5.10.1. Gas Distribution System.

distributed to the experimenters' cells through the distribution headers. In order to minimize the possibility of mixing the gases, connection will be made to only one header at a time by means of a pipe jumper (flanged pipe section). The flange connection to the alternate header is kept blanked off. A filter is provided downstream of the jumper. In addition to backing up the header filters, this filter serves to trap any particles which enter the lines during connection of the jumper. A high degree of filtration is necessary to limit the particulate matter entering the loop, to protect the reducing valves, and to preserve the tightness of the spectrometer-leaktight valves in the buffer gas system.

In general, each pressure-reducing station consists of a reducing valve, a valve vented to atmosphere to provide flow while setting the reducing valve, a downstream pressure gage for use in setting the reducing valve, a relief valve, and a shutoff valve. In each case where the supply line terminates in a system with its own overpressure device, the reducing-station relief valve is set to operate at a lower pressure than the in-cell relief device. In the event of incorrect resetting of the regulator to too high a pressure, pressure relief will take place in the tunnel rather than in the cell. This reduces the requirement for entering the cell for maintenance of rupture disks and relief valves. Each supply line is provided with two check valves in series inside the cell. These serve to maintain secondary containment in the event of failure of piping or components inside the cell and also to reduce back leakage to negligible values.

Because of the extreme tightness requirements of the buffer gas system, the shutoff valve is located downstream from the relief connection in the supply line. All other reducing-station relief valves are similarly located for consistency. This location also serves to protect the pressure gages from overpressure which could result from incorrect setting of a regulator.

Operation of the buffer gas system depends markedly on the satisfactory operation of a single pressure element downstream of the check valves. A valved line is provided downstream of the buffer gas shutoff valve. In the event of failure of the pressure element, a gage may be hooked up to provide local indication of a drop of buffer gas pressure.

5.10.2. Operation

All the valves are shown in Fig. 5.10.1 in their normal positions for a loop operating with helium as the coolant. Normal conditions are identical for CO_2 loop operation, except for the positioning of the jumper and the valves upstream of the jumper connection. The shutoff valves downstream of the regulators are normally closed, since all flows are intermittent. The only shutoff valve which is opened with any regularity is the buffer gas shutoff valve. This is cycled once per shift.

For a given experiment, no change in relief or reducing-valve setting is required, except for the reducing valve in the fill line. Since the cold loop fill pressure will be lower than 315 psia (reactor gas pressure) for certain tests and the through-tube pressure must be greater than 315 psia, changes in setting of the reducing valve in the fill line may be required occasionally.

An emergency connection is provided downstream of the jumper. If a distribution header is out of service for any reason, gas may be added with portable cylinders (subject to the limitations discussed in sec. 5.10.6) for supplying buffer gas and filling the gas storage tank. The use of portable cylinders for normal loop filling or pressurization of the through-tube is impractical because of the gas volume required.

The CO_2 distribution header is normally held at a pressure of approximately 2000 psia, but during loop filling the pressure will drop. As an example, during fill of any two 1000-psia CO_2 loops in any 8-hr shift, the header pressure will drop to approximately 450 psia. The header can rapidly be returned to its normal pressure by admitting gas from the buffer gas system. At all times, except during loop filling, the CO_2 distribution header is held at high pressure. The helium supply system is also designed to maintain a high pressure in the helium distribution header at all times, except during loop filling.

5.10.3. Components

Valves. All relief valves discharge to a common line that penetrates from the tunnel to the crane bay area and from the tunnel to the crane bay area to the atmosphere. This is necessary to protect personnel in the tunnel from CO_2 asphyxiation. Since manual valves require definite operational action to admit CO_2 to the tunnel, it is not considered necessary to run the discharge from these valves to the atmosphere. It is assumed that an operator will not leave a manually operated valve open to the tunnel for a long period of time.

The CO_2 distribution header and the reducing stations are steam traced and insulated to assure that liquid does not form in the lines. This is not necessary for the helium distribution header. If an operator inadvertently cuts off steam flow to the steam tracing lines, CO_2 may condense in the lines. If the header or the piping upstream of the reducing valves is then closed off and the tracing steam flow is resumed, the pressure will increase rapidly. In order to protect the piping, relief valves are included on the CO_2 header and downstream of each filter.

Filters. All filters are of a porous metal type and have been selected to remove all particles 5 μ or larger.

Pipe Jumper. The pipe jumper is a short U-shaped pipe section with O-ring-flanged end connections. A blank flange is provided to keep dirt out of the unused connection and to provide backup against leakage from the header.

Instrumentation. Pressure elements (PE) are provided on the helium and CO_2 distribution headers. These provide signals for indication in the tunnel, indication in the experimenters' control room, and annunciation in the experimenters' control room on loss of pressure. Block and bleed valves are provided for each pressure element. Local pressure indicator gages (PI) are provided downstream of each regulator for use in setting the regulator. Block and bleed valves are provided for each pressure indicator.

5.10.4. Design Data

All piping in the gas distribution system downstream of the distribution header cutoff valves is seamless stainless steel, type 304H. The transition from the carbon steel of the helium and CO_2 supply systems is made upstream of the header filters. Pipe sizes are as shown on Fig. 5.10.1. Schedule 40 pipe is more than adequate for all temperature-pressure combinations encountered. The maximum normal operating and design conditions are given in Table 5.10.1.

Table 5.10.1. Design and Operating Conditions for Gas Distribution System

	Maximum Operating Pressure (psia)	Design Pressure (psia)	Maximum Operating Temperature (°F)	Design Temperature (°F)
Helium distribution header	2000	2400	Ambient	150
CO_2 distribution header and piping to all regulators	2000	2400	<250	300
Piping downstream of buffer gas regulator	1100	2400	<250	300
Piping downstream of gas storage regulator	30	2400	<250	300
Piping downstream of loop fill line regulator	600	2400	<250	300

5.10.5. Miscellaneous

The temperature will be maintained at approximately 95°F during CO_2 loop operation to prevent formation of liquid CO_2 in the lines inside the cell. Temperature annunciators and alarms are provided for various points on the CO_2 piping in the tunnel to assure satisfactory steam tracing operation.

No special provisions are included for bypassing a filter during cleaning or replacement. Since the most frequent operation, that of supplying buffer gas, occurs only once per shift, it is felt that the header pressure may be lowered, the filter serviced, and the lines purged between buffer gas additions.

Sufficient valving is provided to purge all gas distribution lines from the supply systems. This is necessary in the event the system is opened to the atmosphere or in the event a change in loop gas (helium to CO_2 or vice versa) is made. No valving is shown for draining the lines of liquid during initial cleaning of the system. The number and location of these valves is subject to the final piping layout.

5.10.6. Failures and Hazards

Since all flows are intermittent and the most frequent flow requirement is for buffer gas (once per 8-hr shift), depressurization of the headers due to excessive flange or valve leakage is not serious. The tunnel is always accessible and most repairs should be possible in short enough time that loop operation will not be hampered. In addition, portable cylinders may be connected to the emergency connection for most services. Carbon dioxide is not normally supplied at high enough pressure for buffer gas used with a 1000-psia loop. A small amount of high-pressure gas may be obtained for buffer gas use.

The inclusion of two check valves (requiring positive pressure to open) in series for each supply line should reduce leakage to the tunnel area to negligible values and should thereby maintain secondary containment in the event of a failure of any supply line within the cell.

A remotely operated valve is provided downstream of the reducing-station filter. This valve closes automatically in the event the ventilation bypass vent valve closes (see sec. 6.7). This prevents addition of any gas to the experimenters' cell when the cell is isolated. The addition of gas could result in breakage of the cell rupture disk.

5.10.7. Project References

Design Criteria (CF 61-6-3)	
Gas Distribution System Criteria	Code C.5.5
Preliminary Design Drawings (CF 61-6-2)	
Process Flowsheet, Gas Distribution and Buffer Gas System	D-RD-10112
Instrument Diagram, Gas Distribution and Buffer Gas System	Q-2120-7

5.11. Buffer Gas System

5.11.1. Function

The main functions of the buffer gas system are (1) to indicate during loop operation whether the total leakage through all mechanical joints is excessive and (2) to indicate after loop shutdown which mechanical joint (or joints) is leaking excessively. The buffer gas system is also capable, to a certain extent, of minimizing leakage and of indicating quantitatively the severity of leakage.

5.11.2. Description

The buffer gas system requires a double-seal arrangement (see sec. 4.11) at each mechanical joint to which it is connected. Four joints are buffered, two for the mainstream filter and two for the loop compressors, as indicated in Fig. 5.11.1. Buffer gas is provided by the gas distribution system (see sec. 5.10) at a pressure 100 psi greater than the nominal loop operating pressure. In order to avoid loop-gas purification problems, the same gas is used for buffer gas as for loop gas (helium or CO_2).

From the standpoint of activity release to the cell, the total amount of leakage from all mechanical joints is more important than the distribution of leakage rates among the various joints. For loop operation with helium at a pressure of 1000 psia, the permissible leakage is 0.0000208 lb/hr per joint for all four joints or a total of 0.0000832 lb/hr. Any combination of leakage rates resulting in a total of less than 0.0000832 lb/hr is acceptable (i.e., three joints with zero leakage, one joint with 0.0000832 lb/hr leakage).

5.11.3. Principles of Operation

The operating procedures and pressure settings for helium- and CO_2-cooled loops are essentially identical. In each case the gas used for loop filling is also used for leak detection. For operation with CO_2, it is necessary to hold the cell temperature above 87.8°F (the critical temperature) to avoid liquid formation in the leak detection lines. Minor changes in temperature of the liquid phase of CO_2 at constant volume would produce extreme changes in pressure that would make leak detection by this system impossible. The cell temperature will be controlled (see sec. 6.6) to approximately 95°F by heating and/or cooling during operation with CO_2.

For operation with helium it is planned to disconnect the cell heaters and to operate at full cell cooling capacity. If cell ambient temperatures fluctuate widely and cause leak detection difficulties, it will be necessary to reconnect the heaters and to control the cooling water flow.

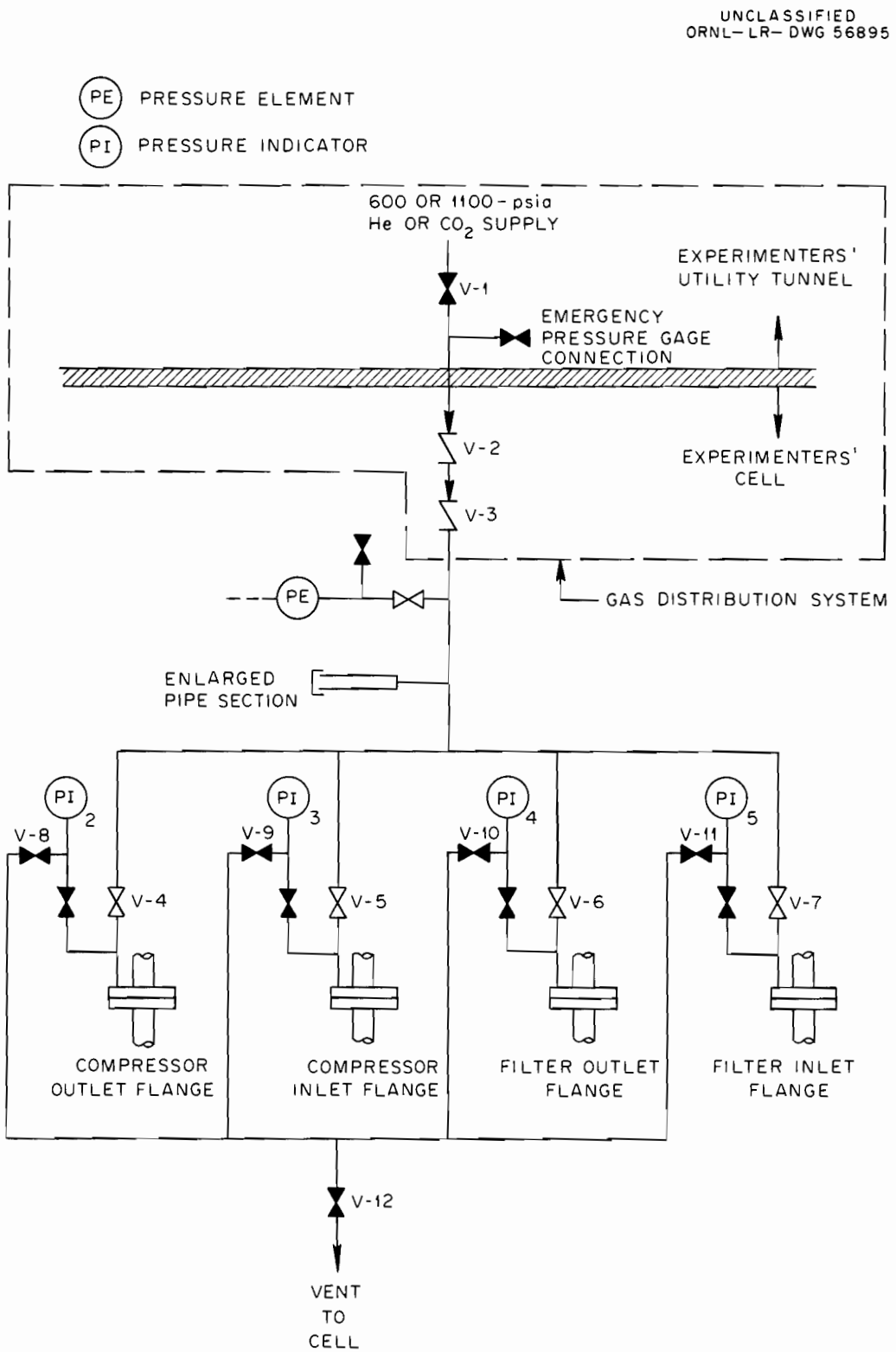

Fig. 5.11.1. Buffer Gas System.

Normal Operation Without Access to the Cell. The following procedure will be used for loop operation with helium at 1000 psia. For any other loop operating pressure, buffer gas will be supplied at 100 psi above the loop operating pressure, and the operating procedures will be otherwise identical.

With all valves initially positioned as shown in Fig. 5.11.1, valve v-1 will be opened and the buffer gas pressure will rise to 1100 psia. All mechanical joints will have helium at a pressure of 1100 psia on the buffer gas side of each double seal. Valve v-1 will then be closed and a determination will be made of whether total leakage from all mechanical joints is excessive. Any leakage, either into the loop or into the cell, will result in a drop in pressure, as sensed by pressure element PE-1.

Pressure element PE-1 will provide a signal for indication in the tunnel, annunciation in the control room, and remote recording of the buffer gas pressure. Annunciation will occur when the pressure drops below 1050 psia (or 50 psia above loop pressure for any other loop pressure).

There are three possible paths for leakage at each joint: (1) from the buffer space to the experimental loop, (2) from the buffer space to the experimenters' cell atmosphere, and (3) from the loop to the buffer space to the cell atmosphere (compound leak). Typical buffer gas pressure, p, versus time curves are shown in Fig. 5.11.2.

Changes in cell temperature make interpretation of pressure changes difficult but do not render the system inoperative. For operation with helium at a pressure of 1000 psia, for example, a 5°F change in cell temperature produces approximately a 10-psi change in the buffer gas pressure.

If the leakage is small, a long time is required to determine the type of leakage path. A small, but highly radioactive, compound leak may possibly be distinguished from a single leak to the cell by cell radiation measurements. For a clean loop (clad fuel elements), this is not applicable; however, leakage of minor amounts of clean gas is not serious.

In order to limit the opening and closing of valve v-1 to once per 8-hr shift, an enlarged pipe section is included downstream of the check valves. This consists of an approximately 8-in.-long piece of 2-in.-diam pipe that is capped and connected to the system with 1/4-in.-o.d. tubing. Since this pipe section contains a large percentage of the buffer gas, it is located so as to minimize the effect of temperature changes in the cell.

Normal Operation with Access to the Cell. If excessive leakage is detected, further analysis of the leakage requires access to the cell and loop shutdown. After sufficient time has elapsed for activity to reach a safe level, the direction of leakage will be determined. The loop piping on the cell side of the loop isolation valves will be held at high pressure

UNCLASSIFIED
ORNL-LR-DWG 62064

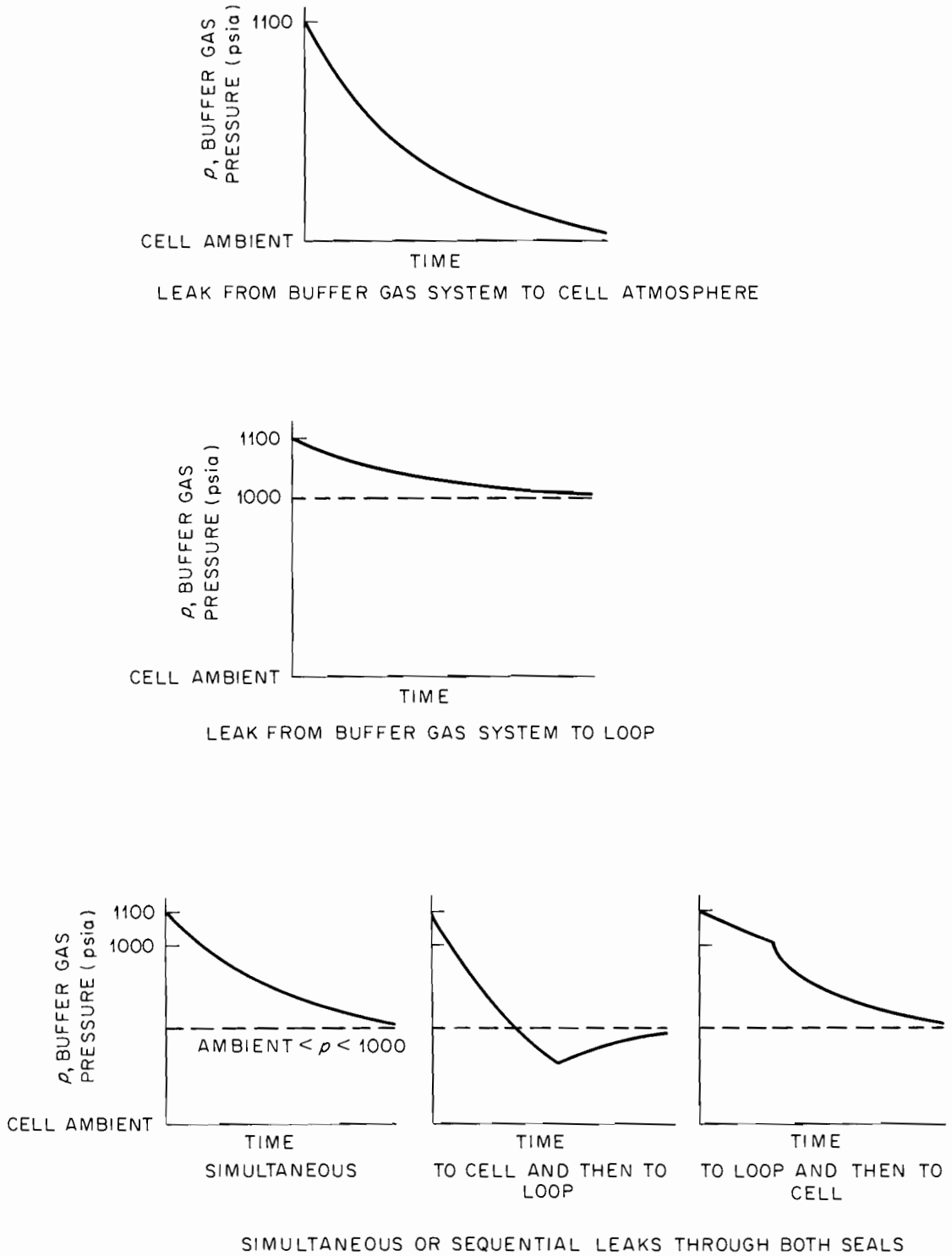

Fig. 5.11.2. Response of Buffer Gas Pressure (p) to System Leaks.

during these operations. If the entire loop has been depressurized, the loop fill line will be used to raise the loop pressure to the setting of the loop fill-line reducing valve.

In order to determine which joint is leaking, valve v-1 and the block valves for gages PI-2 through PI-5 will be opened and the buffer gas pressure will increase to 1100 psia. Valves v-4 through v-7 will be closed and then valve v-1. With acceptable leakage at a flange, the pressure, as indicated on the local gage, will drop to 1050 psia in less than 30 min. The time required for the pressure to drop at a leaking joint should normally be much less than 30 min.

Once the leaky joint (or joints) is located, the direction of leakage will be determined for the filter inlet flange, for example, by opening valves v-11 and v-12. The buffer gas pressure will then fall to atmospheric pressure. Valves v-11 and v-12 will then be closed, and a leak from the loop to the buffer space will result in an increase in pressure at gage PI-5. A leak from the buffer space to the cell will result in no change at pressure gage PI-5.

Leak Checking of Valves. Erroneous results can be obtained if certain valves leak. In order to minimize this possibility all valves will be periodically leak checked when possible (such as during a loop shutdown). Figure 5.11.1 shows that any valve in the system can be tested by placing an 1100-psi differential pressure across the valve to be tested and a zero differential pressure across all other possible leakage paths. Leaky valves may be located by closing off a volume either upstream or downstream of the valve to be leak tested and monitoring the pressure in the enclosed volume.

Cycling Valve v-1 During Operation with CO_2. In order to avoid liquid formation upon throttling of CO_2, the gas distribution system will provide CO_2 at an elevated temperature (greater than 200°F). When CO_2 is added at the end of each shift, the hot CO_2 will enter the leak-detection piping and be cooled to 95°F by heat transfer to the tubing and then to the cell. This cooling will result in a drop in buffer gas pressure. It will be advisable, therefore, to leave valve v-1 open a few minutes to allow the system to come to approximate thermal equilibrium.

5.11.4. Acceptable Leakage Rates

In order to simplify leak detection procedures for an operator, it is highly desirable to set acceptable leakage rates for each coolant and each loop operating pressure at values which always result in a 50-psi drop in buffer pressure during an 8-hr shift. Acceptable leakage rates for each condition vary, but the operator needs only to note that an alarm (annunciation) has taken place in less than 8 hr to establish that leakage is excessive. The results of the use of this criterion of 50-psi pressure loss per shift are evident in Table 5.11.1.

Table 5.11.1. Acceptable Leakage Rates from Buffer Gas System

Cell temperature: 95°F
Buffer gas volume (tubing and enlarged pipe section): 0.0192 ft^3
Number of buffered joints: 4
Highest anticipated average loop gas temperature: 1000°F

Loop coolant and buffer gas	He	He	CO_2	CO_2
Loop operating pressure, psia	1000	500	1000	500
Total acceptable leakage, all joints, in 8 hr, lb	6.66×10^{-4}	6.45×10^{-4}	5.60×10^{-2}	1.35×10^{-2}
Acceptable leakage rate, total for all joints, lb/hr	8.32×10^{-5}	8.06×10^{-5}	7.00×10^{-3}	1.69×10^{-3}
Acceptable leakage rate for 1 joint, lb/hr	2.08×10^{-5}	2.02×10^{-5}	1.75×10^{-3}	4.21×10^{-4}
Mass of coolant in loop at highest average temperature, lb	38.3	19.15	423	210
Loop volume lost per day, %	0.0052	0.0101	0.0397	0.0193

The system is only capable of detecting excessive rates of total leakage into a loop and into a cell. The allowable leakage rates refer to this total. Leakage introduces no danger until it passes both barriers (loop to buffer gas to cell atmosphere). Leakage cannot pass from the loop to the buffer space if the buffer gas pressure is maintained 50 psi above the loop pressure. Further, no hazardous condition exists until the cell radiation level rises. At this time the ventilation bypass valve (see sec. 6.7) is automatically closed.

5.11.5. Components

All valves are manually operated barstock valves such as used on compressed bottle headers. They have soft seats and are initially tested for spectrometer leaktightness. Locally mounted pressure gages are provided at each buffered joint. Pressure element PE-1 supplies a signal for pressure indication in the tunnel, annunciation in the control room, and remote recording. All leak detection tubing is 1/4-in.-o.d., 0.065-in.-wall, type 304H stainless steel.

5.11.6. Failures and Hazards

Failure of gages PI-2 through PI-5 would not be serious, because these gages are used only during operation with access to the cell. These gages can be isolated and are accessible for repair, replacement, or testing.

During operation without access to the cell, leakage at any valve is not necessarily serious because each closed valve is backed up by a second closed valve or fitting. Leakage past a gage block valve must also pass through a bleed valve and the isolated backup valve to enter the cell. Leakage past any of the buffer gas bleed valves (v-8 through v-11) is not serious because valve v-12 is included as a backup valve. Since leakage at any of these valves results in a decrease in buffer gas pressure until the differential pressure across the valve reaches zero, the system will be repressurized after receiving the first alarm at low pressure. The outlet of the bleed valve for pressure element PE-1 is plugged to provide a double barrier to leakage.

Failure of pressure element PE-1 would not be serious because an emergency gage connection (ordinarily plugged) is provided upstream of valve v-1 in the gas distribution system. A drop in buffer gas pressure will not be evident because of check valves v-2 and v-3, but leakage out of the buffer zone will be evident. Back leakage of radioactive gas to the tunnel is prevented by the use of two check valves (v-2 and v-3) in series in the gas distribution system.

5.11.7. Project References

Design Criteria (CF 61-6-3)	
Buffer Gas System Criteria	Code B.9.0
Design Analyses (CF 61-6-4)	
EGCR Loop Buffer Gas System	
Preliminary Design Drawings (CF 61-6-2)	
Process Flowsheet, Gas Distribution and Buffer Gas System	D-RD-10112
Instrument Diagram, Gas Distribution and Buffer Gas System	Q-2120-7

5.12. Experimental Assembly Removal Cooling System

5.12.1. Function

When removing an experimental stringer from a reactor through-tube, cooling must be provided before upward travel of the experimental assembly begins, during upward travel of the experimental assembly into the service machine, and while the experimental assembly is contained in the service machine (both while the service machine is connected to the top nozzle and while it is in motion toward a storage hole, etc.).

Each reactor through-tube must be lined with reflective-type insulation which extends between the top nozzle inner tee and the bottom nozzle inner tee. That part of the insulation extending from the bottom of the experimental stringer to the bottom nozzle inner tee must be installed prior to insertion of the experimental stringer. The remaining part of the required insulation extending from the bottom of the experimental stringer to the top nozzle inner tee will be an integral part of the experimental stringer and removed with it. No significant radial heat transfer from the instrumented fuel assembly through the insulation can be relied upon for cooling during stringer removal.

If a cooling method was utilized which relied upon gas flow up through the stringer, down through the annulus between the stringer and the top nozzle inner tee, and out through the branch of the inner tee, a very high resistance to flow would be encountered when the stringer was well on its way into the service machine. This high resistance could possibly be tolerated if it was not paralleled by a path between the bottom of the stringer and the branch of the inner tee by way of the annulus between the stringer and inner tee. Because of this bypass path, as the stringer bottom approaches the branch of the tee during the stringer removal, more and more flow bypasses the stringer until eventually the flow reduces to zero as the bottom comes in line with the branch.

In order to use the experimental loop gas for experimental assembly removal cooling, it is necessary to add a removal cooling system which provides flow through the experimental stringer at all times and blocks off all significant bypass flow. However, before this additional system can be brought into play it is necessary to use the normal loop gas path for afterheat removal until the afterheat level has fallen to the design capability of the added system. In addition, it is necessary to use the normal loop gas flow path during the first few feet of stringer removal travel since the design of the stringer shield plug prevents flow into the service machine until the shield plug has been lifted a few feet.

5.12.2. Description

As shown on Fig. 5.12.1, the experimental assembly removal cooling system consists of a small blower and a small gas cooler supported from the service machine plus associated valving and piping. The system is designed for a heat removal rate of 15 kw (1% of 1.5 Mw). It will be necessary to wait approximately 1.7 hr after shutdown for the decay heat to drop to this design value.

After reactor shutdown and before appreciable upward travel of the experimental stringer, cooling of the stringer is accomplished by forced convection using the loop compressors (or the auxiliary blower if the compressors are inoperative) as the driving force and the evaporative cooler as the heat sink. After the experimental stringer shield plug is raised sufficiently to permit loop gas flow through the top nozzle into the service machine, the flow path is from the service machine through the removal-cooling system cooler and blower, through a 6-in. line extending from the service machine to the experimenters' cell, back through the main loop piping, upward through the experimental stringer, and into the service machine. When the experimental stringer is fully contained within the service machine, valves V-4 and V-5 are opened and valves V-1 and V-3 are closed.

The blower, cooler, and valves V-3, V-4, and V-5 are supported by the service machine. The connection of these components to the service machine is made through modified blind flanges which are bolted to the top and bottom manholes on the service machine. With the exception of provisions for supporting the cooler and blower, no changes to the service machine are required. All equipment connected to the service machine is removable. The connection between the blower and the permanent 6-in. piping of the system is made by means of a 6-in. portable pipe section and a bellows (for alignment).

The cooler, blower, and piping are being sized to permit removal of a stringer even after complete depressurization of the loop. It is estimated that the blower will have to supply 822 lb/hr of helium at 300 psig or 274 lb/hr at atmospheric pressure. The head, speed, wheel size, and power requirements cannot be established until a preliminary piping layout of the system is made.

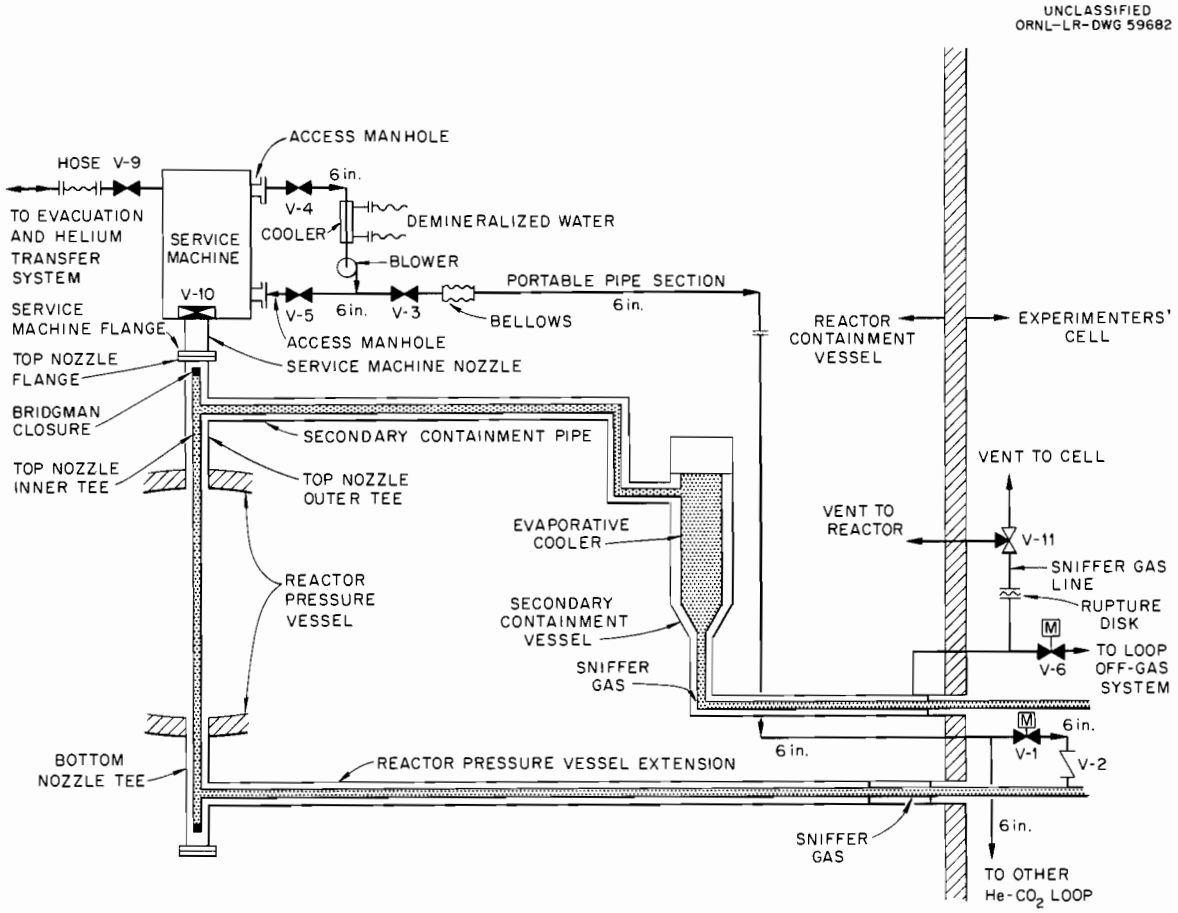

Fig. 5.12.1. Experimental Assembly Removal Cooling System.

Although the average gas temperature within the service machine is held to 150°F by forced circulation, the actual cooling of the experimental stringer while contained in the service machine is by natural convection. There is no internal piping to guide the removal-cooling system blower flow through the stringer. The system merely maintains a low average temperature in the service machine. The stringer is cooled by natural convection up through the stringer and back down through the service machine interior. The removal-cooling system blower and cooler maintain the service machine interior below 150°F (during normal operation of the system).

If the sniffer gas region is contaminated, a plastic boot is required to prevent release of the contaminated gas while the service machine is being connected. This boot is designed to make a connection between the top nozzle and the service machine nozzle. It is provided with gloves and sufficient space for the blind flange, bolts, a wrench, etc. During the operations involved, the boot will always see a pressure of 1 atm. For removal, the boot will be pinched off both at the service machine nozzle and at the top nozzle to contain as much of the contaminated gas as possible.

The instrumentation requirements of the system have not been established. However, some of the important variables to be measured are removal-cooling system blower flow, service machine temperature and pressure, various loop temperatures, loop pressure, sniffer gas pressure, removal-cooling system cooler temperatures, demineralized-water flow, cell pressure, and radiation level at various points.

5.12.3. Uninstrumented Experimental Assembly

As designed, the service machine is incapable of handling an experimental stringer which is long enough to utilize the entire active core length of the reactor. About 4.3 ft of active core length will lie below the longest experimental stringer which can be handled. This region of active core may be occupied by an uninstrumented experimental assembly when preheating of the gas entering the instrumented experimental assembly is desired.

An uninstrumented experimental assembly will consist of an unistrumented fuel assembly extending through the lower 4.3 ft of the active core, a support spider extending from the fuel assembly to a point near the bottom of the reactor core assembly, and some insulation which is integral with the remainder of the uninstrumented assembly. The assembly will be supported from a shoulder on the inside of the through-tube. The uninstrumented experimental assembly may be removed as a unit (including insulation and support) after the experimental stringer is removed.

5.12.4. Operation

The steps necessary for the removal of an instrumented experimental assembly (experimental stringer) from a through-tube into the service machine are outlined in detail in the design criteria for the experimental assembly removal cooling system (see sec. 5.12.5). Four operating situations were considered, each covering loop operation with helium or CO_2 as the loop coolant. The conditions covered were (1) the normal operating case; (2) stringer removal after depressurization of the main loop to the experimenters' cell; (3) stringer removal after partial depressurization of the main loop piping to the upper sniffer gas region, for the case in which the loop operating pressure before failure was not high enough to burst the sniffer gas rupture disk, i.e., the combination of a large secondary containment volume and a rapid cooling of the gas resulted in a final pressure of less than the disk rupture pressure; (4) stringer removal after complete depressurization of the main loop piping to the upper sniffer region, for the case in which the combination of a high initial loop operating pressure and a smaller amount of gas cooldown resulted in a pressure exceeding the disk rupture pressure.

The steps necessary to remove both the instrumented and uninstrumented fuel assemblies from the same through-tube were also considered.

5.12.5. Project References

Design Criteria (CF-61-6-3)	
Criteria for the Experiment Removal Cooling System	Code D.4.0
Design Analyses (CF-61-6-4)	
Experiment Removal Cooling System	
Preliminary Design Drawings (CF-61-6-2)	
Process Flowsheet, Experiment Removal Cooling System	D-RD-10474

5.13. Through-Tube Pressurizer and Loop Fill System

5.13.1. Functions

The functions of the through-tube pressurizer and loop fill system are to pressurize the through-tube when the loop is shut down but the reactor is operating, to fill the experimental loop directly from the gas supply tanks, and to pressurize the in-cell loop piping during leak hunting.

Through-Tube Pressurization. When an experimental loop is shut down with the experimenters' cell sealed (acting as secondary containment) and

the reactor is operating, the loop through-tube will be isolated by the cell isolation valves and pressurized with a dry inert gas at a pressure greater than the reactor gas pressure. An inert gas will be used rather than air to minimize corrosion and neutron activation. A pressure greater than the reactor pressure will be maintained, since it eliminates the column compressive (buckling) load on the through-tube and thus prevents distortion of the through-tube by long-term creep at high temperature.

It should be noted that the loop through-tube is designed to withstand the column compressive load resulting from reactor pressure (315 psia) on the outside and atmospheric pressure on the inside. This is necessary, since it is possible with any through-tube pressurization system to lose the gas pressure inside the through-tube; and, as discussed later, the through-tube must be held at low pressure when the experimenters' cell is open. This system is designed to limit but not eliminate the time during which this buckling load is applied to the through-tube. The system is capable of pressurizing all loop piping from the inlet isolation valve, through the loop through-tube, through the cooler, to the outlet isolation valve.

Helium was selected as the pressurizing gas because it is chemically inert and will not affect reactor operation in the event of a small leak to the reactor gas. Since the loop must be evacuated before being opened for maintenance, the use of helium as the pressurizing gas in a loop ordinarily operated with CO_2 does not introduce additional purification problems.

When a loop is shut down, the experiment removed, and the experimenters' cell opened while the reactor is in operation, the loop through-tube becomes the primary containment for reactor gas (relative to the open cell), and the loop piping up to and including the 6-in. isolation valves becomes the secondary containment vessel. If this secondary containment vessel is pressurized, a close coupling will exist between the primary and secondary containment (see sec. 6.1). A failure of the secondary containment vessel will immediately place the primary containment vessel in its condition of maximum stress, thus increasing the credibility of a loss of containment type of failure. For this reason, pressurization of the through-tube will be limited to 30 psia with the experimenters' cell open. It is not considered credible that a rapid reduction of through-tube pressure from 30 to 15 psia could initiate a through-tube failure. The 30 psia pressure is required as a part of a continuous leak detection system for the secondary containment system.

Direct Loop Fill. In order to minimize the storage volumes required in the helium and CO_2 supply systems, the experimental loop will be filled while cold. By this method it is possible to use a lower supply pressure during loop fill. In contrast, if heatup of the loop gas is allowed to take place simultaneously with gas addition to the loop, the gas supply pressure may have to be held well above 1000 psia. A loop fill from the gas storage tanks inside the experimenters' cell is discussed in Section 5.3.

Pressurization of In-Cell Loop Piping. As discussed in Section 5.11, mechanical joint leak-detection procedures require the in-cell loop piping to be pressurized. For the purpose of leak detection, no change in the fill-system pressure adjustment is necessary if the system has been set for either cold loop filling or full pressurization of the through-tube. Leakage from the buffer zone to the loop gas at any mechanical joint will be detected, provided there is sufficient differential pressure between the buffer gas and the loop gas. A compound leak (loop to buffer zone to cell) will be detected provided loop gas pressure is high relative to cell pressure.

5.13.2. Description

The through-tube pressurizer and direct loop fill system utilizes existing lines in the decontamination system (see sec. 8.3) and the gas distribution system (see sec. 5.10) to fulfill its required functions. No new components other than a valve and a restriction orifice are required (see sec. 5.10).

A supply of helium or CO_2 is received from the loop-fill reducing station of the gas-distribution system. The decontamination system valving permits this gas to flow to either or both sides of the loop isolation valves, thus pressurizing either the in-cell or the out-of-cell loop piping or both. The decontamination system vent valve may be used to depressurize either or both sections of the loop piping.

Three loop pressures are measured inside the experimenters' cell: (1) the test section return-line pressure, (2) the filter inlet-line pressure, and (3) the compressor discharge-line pressure.

5.13.3. Principles of Operation

Through-Tube Pressurization. The through-tube pressurizer system will be used whenever an experimental loop is shut down with the experimenters' cell sealed and the reactor in operation, such as during major loop maintenance. During this time, access to the cell for manual valve operation is possible.

In order to limit the oxygen and moisture content of the helium used for through-tube pressurization, it will be necessary to either evacuate the out-of-cell mainstream piping or reduce the air and moisture content by a gas feed and bleed purging process, or both.

In order to pressurize the through-tube, the helium supply is throttled through the direct-loop-fill reducing station of the gas-distribution system until the through-tube pressure reaches approximately 400 psia. An orifice in the line limits the rate of through-tube pressure rise to protect the reflective insulation inside the reactor through-tube.

This multilayer metal insulation, canned inside a perforated sleeve, can be damaged by rapid pressure changes.

As previously mentioned, when an experimental loop is shut down and the experimenters' cell opened while the reactor is operating, pressurization of the through-tube will be limited to 30 psia.

Direct Loop Fill. Prior to filling the loop, it will be necessary to evacuate the mainstream piping. As in the case of through-tube pressurization, both the vacuum pump in the loop offgas system and purging by feeding and bleeding gas may be used to obtain the required purity and dryness in the piping. The fill reducing valve will be adjusted to a pressure which results in near normal loop operating pressure when the loop gas is heated (at constant volume) to loop operating temperature. The gas transfer system may be used to adjust the loop operating pressure after loop heatup.

Pressurization of In-Cell Loop Piping (for Leak Detection). The in-cell loop piping must be pressurized during leak checks of the four buffered flanges (two filter flanges and two compressor flanges) and other components. It may be desirable to perform a leak check while the reactor is down and the through-tube is depressurized, or to test the filter flanges while the compressors are depressurized, or to test the compressor flanges while the filter is depressurized. As shown in Section 8.3, the necessary isolation valves are included in the mainstream piping to pressurize these sections separately.

As was previously mentioned, there is no need to change the setting of the direct-fill regulator if it has previously been set for either loop fill or pressurization of the through-tube. Any reasonably high loop-gas pressure would be satisfactory for leak detecting.

5.13.4. Components

All required components other than a block valve and an orifice are provided as a part of the decontamination system or gas-distribution system. The orifice size will be determined when the limitation on rate of pressure rise has been determined for the reflective insulation.

5.13.5. Hazards

No additional hazards appear to be introduced by the addition of this system. A relief valve downstream of the fill regulator prevents an operator from overpressurizing the loop (sufficient to cause loop relief devices to open on heatup of the loop), and the orifice prevents too rapid a rate of pressurization. Back leakage of loop gas to the utility tunnel requires leakage past three valves.

5.13.6. Project References

Design Criteria (CF 61-6-3)

Through-Tube Pressure and Loop Fill System Criteria Code B.6.4

Design Analyses (CF 61-6-4)

Through-Tube Pressurizer and Loop Fill System

5.14. Loop Offgas System

5.14.1. Function

The function of the loop offgas system is to safely transfer to the cell ventilation system all gases within the experimenters' cell and loop. The system is used during loop blowdown, decontamination, loop evacuation, sample station operation, and experiment removal.

5.14.2. System Description

The loop offgas system equipment consists of a liquid trap, a vacuum pump, a charcoal trap, filters, and shutoff valves, as shown in Fig. 5.14.1. The liquid trap is required during decontamination to trap any liquid which enters the vent lines. The vacuum pump is used for evacuation of the mainstream loop piping prior to initial loop filling and for evacuating the sample station equipment. Downstream of the vacuum pump, a charcoal bed and absolute filter are used to trap most of the radioactive particulate matter that is discharged from the loop piping and sample station. A roughing filter, which precedes the charcoal bed, is designed to prevent oil discharged by the vacuum pump from fouling the charcoal. The absolute filter following the charcoal trap is designed to remove 99.9% of all activity other than the noble-gas fission products. Although the experimental loop contains its own bypass gas-cleanup system (see sec. 5.2), these filters and trap are required to remove as much activity as possible during sample station operation and experiment removal. The loop offgas system is isolated by a shutoff valve (HV-519), which is closed when activity exceeding a predetermined value is released to the cell ventilation system.

5.14.3. Equipment Description

Liquid Trap. The liquid trap consists of a type 304 stainless steel tank that collects any liquid in the offgas. The liquid which collects is automatically discharged to the cell drain system by a float-operated valve (LV-509). A hand-operated valve (HV-510) is located at the low point in the trap. The design conditions of the tank are 150 psig or full vacuum at 250°F.

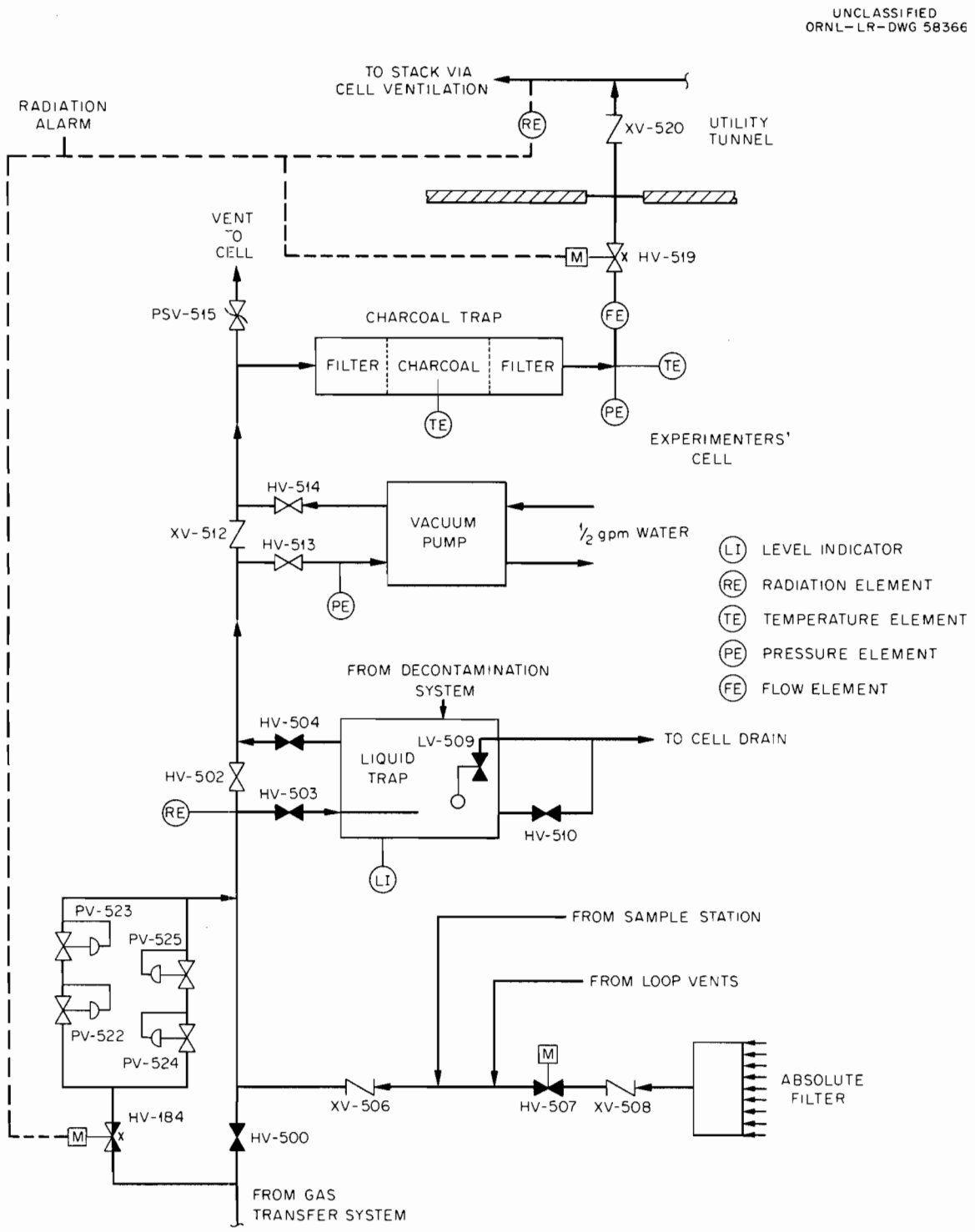

Fig. 5.14.1. Loop Offgas System.

Vacuum Pump. The vacuum pump is a standard vacuum pump with a free-air capacity of not less than 50 scfm and is capable of producing a 0.01-mm-Hg vacuum. The pump oil is a nonflammable, radiation-resistant fluid. The suction side of the pump contains an oil trap to prevent back diffusion of the pump oil into the loop. The discharge side contains an oil separator to prevent loss of the pump oil. During pump operation cooling water is supplied at 1/2 gpm, 100°F, and 150 psig (see sec. 5.6).

Charcoal Trap. The charcoal trap consists of a prefilter, a charcoal bed, and a postfilter contained in one pressure vessel. The charcoal bed contains approximately 45 lb of 6 to 14 mesh BPL activated charcoal. The bed has a minimum flow area through the charcoal of 1.4 ft^2 and a minimum charcoal depth of 12 in. The postfilter is an absolute filter with a minimum efficiency of 99.97% for 0.3-μ particles and is rated for 30-scfm air at a pressure drop of 1 in. H_2O. The absolute filter is suitable for operation at temperatures up to 250°F in a high-humidity atmosphere. The charcoal-trap pressure vessel is designed for 150 psia at 250°F.

Air Filter. Air entering the loop offgas system from the experimenters' cell passes through an absolute filter. The minimum efficiency of this filter is 99.97% for 0.3-μ particles. The filter is rated for 30-scfm air with a pressure drop of 1 in. H_2O. A prefilter is used to remove gross particulate matter. Both filters are suitable for operation in a high-humidity atmosphere at temperatures up to 250°F.

5.14.4. System Operation

The loop offgas system is designed to discharge contaminated gas to the EGCR stack via the experimenters' cell ventilation system (see sec. 6.7). The cell ventilation system is used to supply the large volumes of air required for dilution of the contaminated offgas. Prior to starting an off-gas discharge, an 8-in. butterfly valve at the inlet end of the cell ventilation system exhaust header is opened and the ventilation system valves to and from all cells are closed. Both cell ventilation system exhaust fans, each having a capacity of 1760 cfm at 60°F and a pressure drop of 4.25 in. H_2O, are turned on to maintain a high negative pressure in the ventilation system exhaust duct.

A radiation monitor is located on the ventilation duct next to each experimenters' cell to warn of excessive radiation in the experimenters' tunnel. If the allowable radiation level in the experimenters' tunnel is exceeded, the offgas discharge will be stopped by closure of valve HV-519 (and valve HV-184, if open), and an alarm will sound in the utility tunnel and in the experimenters' control room. During all operations involving the loop offgas system, except initial loop evacuation, the integrity of the experimenters' cell containment is maintained.

Operation with Loop at Power. When the experimental loop is operating at power, the offgas system is used to provide a vacuum for the gas

sample station and, occasionally, to discharge gas from the gas storage tanks. To discharge gas from the gas storage tanks during loop operation, valve HV-519 is fully opened and then valve HV-184 is cracked open. A series of pressure regulators (PV-522, PV-523, PV-524, and PV-525) reduce the gas pressure to about 15 psia. This prevents the offgas system from being exposed to excessively high pressure. The four regulators are arranged so that any one of the regulators may fail in either the open or closed position without affecting the operation of the loop offgas system. A check valve (XV-512) permits flow past the vacuum pump and a pressure relief valve (PSV-515) prevents overpressurization of the loop offgas system.

Loop Blowdown. Loop blowdown (discharge of all gases from the mainstream piping and auxiliary systems) is the operation which will discharge the largest amount of activity to the cell ventilation system. Loop blowdown will occur whenever a change of loop gas is required. To accomplish this, valve HV-519 is fully opened and then valve HV-184 is slowly opened (other valves remain as shown in Fig. 5.14.1). Gas flow from the experimental loop is controlled by valve HV-184. The rate at which the gas is discharged to the cell ventilation system is regulated by the radiation level in the experimenters' utility tunnel and the EGCR stack. In the severe case of an unclad fuel element and with an air flow rate of 3520 scfm in the cell ventilation system, the experimental loop gas may be discharged in 12 hr with a maximum dose rate of about 3.8 mr/hr at the surface of the cell ventilation system exhaust header. Limited access to the experimenters' utility tunnel may be required during this time.

Loop Evacuation. Prior to filling the experimental loop with new gas, the entire loop must be evacuated to remove all contaminated gases. To accomplish this, valve HV-500, which is locked and tagged in the closed position during loop operation, is opened to permit the loop to be evacuated through a 2-in. line instead of through the 1/2-in. line of valve HV-184. All other valves remain as shown on Fig. 5.14.1, and the vacuum pump is started. Loop evacuation requires a minimum time of 6 2/3 hr.

Decontamination Gas Removal. The decontamination of an experimental loop will be accompanied by the evolution of gases. These gases, principally decomposition products of the decontamination reagents and water vapor, will be removed from the loop piping by the loop offgas system. To accomplish this, valves HV-503 and HV-504 are opened and valves HV-502, HV-513, and HV-514 are closed (other valves remain as shown in Fig. 5.14.1). Any liquid which enters the vent lines and any water vapor which condenses in the lines is collected in the liquid trap. As the liquid collects in the trap, a float valve (LV-509) opens and allows the liquid to drain to the cell drain system. After all decontamination operations are completed, valve HV-510 is opened to allow any liquid remaining in the trap to drain. To facilitate draining liquids from experimental loop components, the loop offgas system contains a "breather" which permits air to enter the loop via the vent lines. The "breather" consists of a motor-operated

isolation valve (HV-507) and a check valve (XV-508) in series. The check valve prevents any backflow of gases into the experimenters' cell. The absolute filter prevents any particulate matter in the cell air from entering the experimental loop. The "breather" is also used to remove contaminated air from the experimenters' cell for cleanup in the offgas system prior to release to the cell ventilation system.

5.14.5. Project References

Design Criteria (CF 61-6-3)	
Loop Offgas System	Code B.11.0 C.1.0
Design Analyses (CF 61-6-4)	
Loop Offgas System	
Preliminary Design Drawings (CF 61-6-2)	
Process Flowsheet, Loop Offgas System	D-RD-10324
Instrument Diagram, Loop Offgas System	Q-2120-16

5.15. Sniffer Gas System

5.15.1. Function

The functions of the sniffer gas system are (1) to detect experimental loop and reactor gas leaks into the loop-containment pipe system and (2) to detect leaks from the loop-containment pipe system into the reactor-containment vessel and/or experimenters' cell.

5.15.2. Description

Lower Chase Piping Sniffer System. As shown in Fig. 5.15.1, the loop-containment pipe forms a short annular enclosure around the experimental loop piping between the reactor pressure vessel extension and the experimenters' cell penetration. This annular loop-containment volume is designed to safely contain gas at 1100 psia and 975°F.

The sniffer gas system is designed to detect leaks into or out of this containment volume. It consists of a pressure transmitter (PT-1) with a block valve (V-1) and a fill and bleed valve (V-2). The system is piped to the loop-containment volume by means of 1/4-in.-o.d. stainless steel tubing. To place the system in operation, the containment volume is first charged to approximately 20 psia by temporarily connecting an air-bottle supply (1600 psia) to valve V-2. In order to prevent accidental overpressurization, a special relief-valve assembly containing a relief valve

UNCLASSIFIED
ORNL-LR-DWG 56896

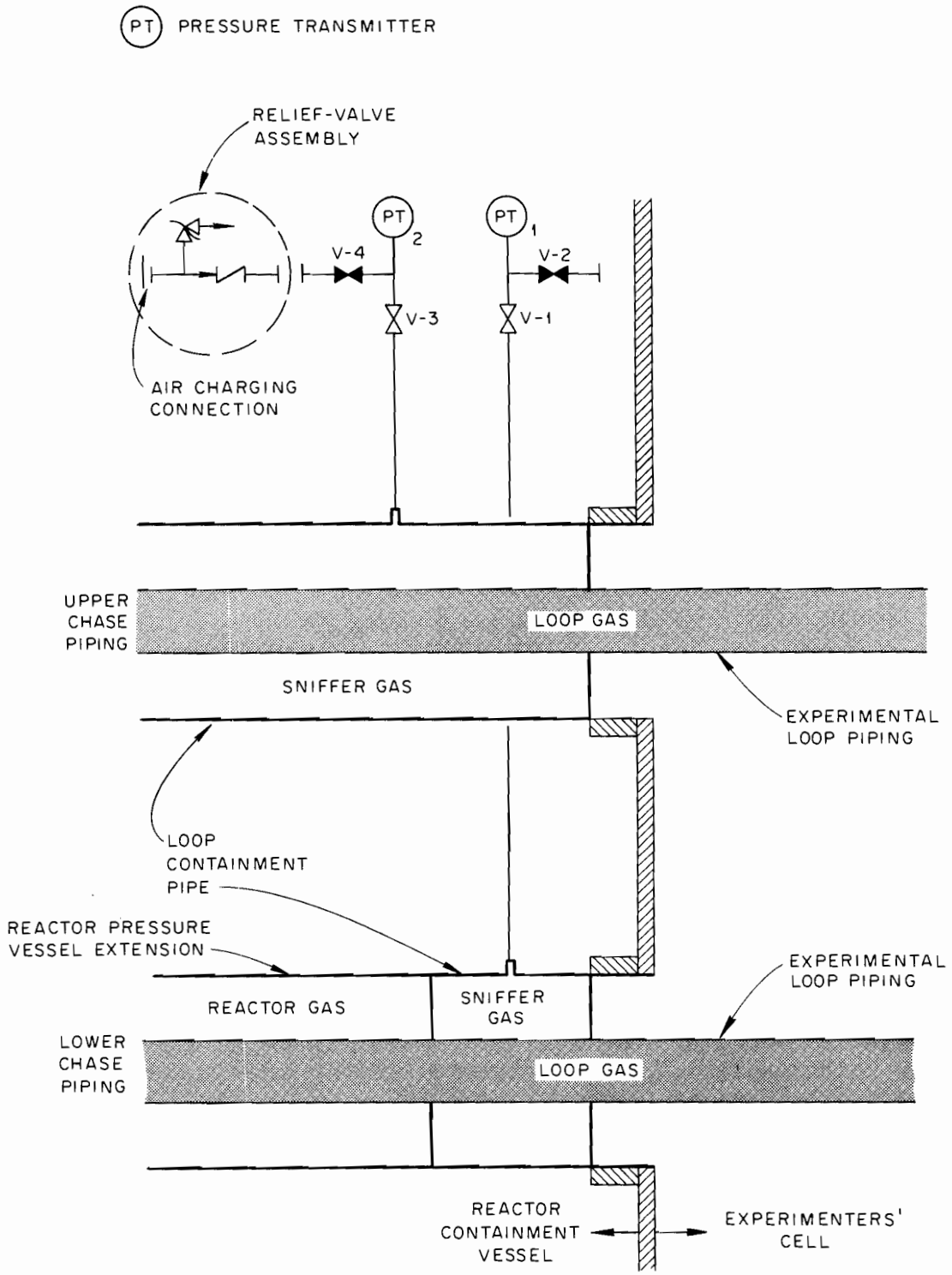

Fig. 5.15.1. Sniffer Gas System.

and a check valve is provided for use during charging. This special assembly is chained to one of the air-charging connections, but it will reach to the other connection when needed. The relief valve is set for 27 psig. The check valve is included to prevent release of loop gas or reactor gas into the reactor-containment vessel if a loop or reactor piping failure should occur while the sniffer gas system is being charged. The check valve is placed in the removable section in order to permit depressurization of the upper chase piping sniffer system prior to removal of an experimental assembly. In order to prevent direct connection of a gas bottle to the sniffer gas system, the upstream end of the special relief-valve assembly has a union connector that matches the bottle connector, but the downstream end is flanged. The relief valve is not permanently piped into the sniffer gas system, because leakage from the system must be held to very low values if the system is to function properly.

The experimental loop is heated after the sniffer gas system is charged. The subsequent heating of the sniffer gas will increase its pressure to less than 60 psia. If leakage of reactor gas into the containment volume should occur, it will result in a pressure rise of up to 315 psia. Leakage of loop gas into the containment volume will increase the sniffer gas pressure until it equals the loop gas pressure. A leakage of sniffer gas to either the experimenters' cell or the reactor-containment vessel will result in a drop of the sniffer gas pressure to atmospheric pressure. Pressure transmitter PT-1 provides continuous, direct pressure readings in the experimenters' control room and annunciation when the sniffer gas pressure drops to less than 20 psia or increases to greater than 100 psia.

Upper Chase Piping Sniffer System. In the case of the upper chase piping, the loop containment pipe forms an annular enclosure around the experimental loop piping that extends from the experimenters' cell penetration back to the top nozzle tee of the reactor pressure vessel. This containment volume is designed to safely contain gas at 675 psia and 650°F and is provided with overpressure protection (see sec. 6.2).

The sniffer gas system for the upper chase piping is identical in design and principal of operation to the sniffer system described above for the lower chase piping. The main difference is that the annular volume of the upper chase sniffer system is very large compared with the volume of the lower chase sniffer system.

5.15.3. Project References

Design Criteria (CF 61-6-3)

Sniffer Gas System Criteria	Code A.10.0

Preliminary Design Drawings (CF 61-6-2)

Process Flowsheet, Sniffer Gas System	D-RD-10114

5.16. Through-Tube Nozzle Cooling System

5.16.1. Function

The function of the through-tube nozzle cooling system is to control the temperature of the carbon steel reactor pressure vessel nozzles and nozzle extensions. This system connects to the top and bottom nozzles of loops TS-2, TS-3, TL-1, and TL-4.

During the process of keeping the pressure vessel nozzles and nozzle extensions cool, the system performs the secondary function of partially cooling the through-tube and thereby reducing the differential thermal expansion between the through-tube and the reactor pressure vessel. This reduction in expansion permits the use of an expansion leg at the bottom of the through-tube instead of a bellows to take up the differential expansion.

5.16.2. System Description

The through-tube annulus and interior nozzle cooling systems are a part of the reactor vessel cooling system that cools the charge machine, service machine, reactor nozzles, and the reactor pressure vessel. Helium is extracted for this system from the inlet duct of the reactor cooling system, which is normally operating at 508°F. The helium passes through a compressor (with one on standby) where the pressure is raised to overcome the system resistance. (At this point helium is taken off for the annulus cooling system.) The helium for the interior nozzle cooling system passes on and flows through a service-water-cooled heat exchanger where the helium temperature is reduced to 125°F. The helium then flows to a distribution header where the flow is proportioned according to the requirements of each component (charge machine, service machine, and interior nozzle cooling system). A separate line, including valves and instrumentation, extends to each nozzle from the distribution header for the interior nozzle cooling system.

A line from the annulus cooling system supplies gas to cool the annulus between the reactor pressure vessel top nozzle and a thermal sleeve placed between the nozzle and the through-tube. The annulus cooling gas enters the nozzle approximately two feet below the top nozzle outer tee and discharges into the region between the reactor thermal shield and the reactor pressure vessel. The line from the interior nozzle cooling system supplies gas to cool the annulus between the nozzle extension and the reactor through-tube and between the through-tube and the thermal sleeve. The gas enters just below the top nozzle outer tee and discharges into the upper plenum of the reactor.

The design of the bottom reactor nozzles is such that only the interior nozzle cooling system is required. The line from the interior

nozzle cooling system supplies gas to cool the annulus between the reactor through-tube and a thermal sleeve which protects the reactor pressure vessel nozzle. The interior nozzle cooling gas enters the annulus just above the bottom nozzle outer tee and discharges into the bottom plenum of the reactor.

5.16.3. System Design

The system feeding gas to the through-tube nozzle cooling system has two compressors and two heat exchangers, one of each operating and one of each on standby. Each compressor or heat exchanger is designed to handle the total system peak load. Emergency power is supplied to both compressors. The water seals for the compressors are cooled by the reactor blower seal water system. If this system fails, the compressors can continue to operate, but the reactor is shut down by an automatic motor-driven rod insertion. If both vessel cooling system blowers fail, the positive pressure created by the reactor blowers can maintain about 20% of the normal flow through the system.

After leaving the coolers the helium flows to a distribution header, where it is divided according to the needs of each system. The lines (1 1/2-in. sched.-40) running from the distribution header to the nozzles each contain a check valve installed in the line as near to the reactor as possible. If a break occurs upstream of this valve, the reactor will not be depressurized.

A flow indicator and alarm is installed in the line to each nozzle to detect a flow decrease of 10% from a preset value and initiate a reactor scram if the flow drops below 25% of a preset value. A globe valve is installed in the line at an accessible location to permit an operator to make manual flow adjustments during initial operation. By adjusting this flow, the nozzle temperature can be adequately controlled. This valve will also permit correcting minor flow fluctuations resulting from intermittent operation of the charge and service machine when they are connected to the system. If an operator closes one of these valves by mistake, thus shutting off coolant flow to a nozzle, the flow indicator and alarm will shut down the reactor by a motor-driven rod insertion when the flow drops to 25% of a preset value. In addition, the mainstream gas heater will be shut off and the mainstream gas cooler will go to full cooling. The in-pile experiment power will drop immediately, as will the gas temperature leaving the core. The loop gas temperature will quickly drop to 650°F or less, which is well below the design temperature of the carbon steel nozzle and nozzle extension.

Three thermocouples are installed at the carbon steel to stainless steel weld below the top nozzle tee, and three are installed at the corresponding joint above the bottom nozzle tee. These thermocouples will serve as a check of the nozzle temperature as a function of nozzle cooling gas flow during initial operation of the reactor and the experimental

loops. Three thermocouples will be installed at the field weld above the annulus coolant inlet in the top nozzle. These thermocouples will permit a check of the nozzle temperature when the through-tube is not installed and the temporary shield plug is in place. The temporary shield plug must extend below the inlet of the annulus cooling channel to prevent the flow of reactor gas up the nozzle from the top reactor plenum in case of an interior nozzle cooling system failure. The through-tube serves this function when the tube is installed.

5.16.4. Project References

Design Criteria (CF 61-6-3)	
Experimenters' Interior Nozzle Cooling System Criteria	Code A.7.0
Design Analyses (CF 61-6-4)	
Through-Tube Nozzle Cooling System	
Preliminary Design Drawings (CF 61-6-2)	
Process Flowsheet, 5 1/2-in. and 9 1/2-in. Through-Tube Reactor Nozzle Cooling System	D-RD-10117
Instrument Diagram, Nozzle Cooling System	Q-2120-19

5.17. Plant and Instrument Air

5.17.1. Requirements

The peak air requirements for the EGCR experimental facilities are 400 scfm of instrument air and 200 scfm of plant air. The instrument air is used in the experimenters' control room, utility tunnel, and crane bay area and for the loop cooling water system controls located inside the reactor containment vessel. The plant air is used in the experimenters' cell, utility tunnel, and crane bay area.

5.17.2. Description

Air for the experimental facilities in the EGCR is supplied from the reactor compressed air system. This system consists of three 250-scfm carbon-ring-type compressors (one is on standby) discharging through a 500-scfm air dryer into two air receivers, one for plant air and one for instrument air. The combined capacity of both air receivers is sufficient to supply 300 scfm of air for 4.75 min with a drop in pressure from 100 to 60 psig. Air pressure in the receivers during normal demand will range from 105 to 120 psig. The three compressors are sequenced to automatically cut in at 110, 105, and 100 psig, respectively, and to cut out at 120, 115,

and 110 psig, respectively. A check valve is provided on the instrument air receiver inlet line to conserve the instrument air supply if excessive demand is placed on the plant air supply. This prevents the plant air system from lowering the instrument air receiver pressure to the point where instruments become inoperative. In addition, a pressure control valve is provided on the plant air receiver outlet which closes if the receiver pressure drops to 90 psig. This prevents abnormal usage of plant air from depleting the plant air supply. This valve cannot be reopened until the plant air receiver pressure increases to above 90 psig. A takeoff line is provided to permit using the plant air receiver for instrument purposes in case the instrument air receiver must be isolated for maintenance.

The plant air is distributed to the experimenters' utility tunnel and crane bay area through two parallel 1 1/2-in.-IPS headers; one running along the inside wall of the utility tunnel and the other along the outside wall of the crane bay area enclosure. The plant air is routed to each experimenters' cell by means of a flexible hose with quick-disconnect fittings at each end. A permanently mounted manual block valve with a quick-connect fitting is mounted on the utility tunnel inside wall. The quick-disconnect fittings are mounted so that disconnecting the flexible hose from the plant air header closes off the air supply from the header, and disconnecting the hose from the manual block valve closes off the pipe penetrating the experimenters' cell wall. The air line penetration of the experimenters' cell is terminated by a second manual block valve located inside the cell. This valve is equipped with a quick-disconnect fitting for connecting an air hose for use inside the cell. This fitting valves off the air supply whenever the air hose is removed. A manual block valve is also provided on the air distribution header. The plant air header in the experimenters' crane bay area is equipped with a takeoff valve and a quick-disconnect fitting at each experimenters' cell location. The distribution headers to the utility tunnel and crane bay area are both equipped with isolation valves at the takeoff point from the plant air supply line.

The instrument air is supplied to the experimenters' control room through a 2-in.-IPS pipe and to the experimenters' utility tunnel and crane bay area through parallel 1 1/2-in.-IPS headers; one running along the inside wall of the utility tunnel and the other along the outside wall of the crane bay area enclosure. In the utility tunnel a 1/2-in. header takeoff with an isolation valve is provided for each experimenters' cell. Takeoffs from the instrument air header in the crane bay area will be provided later as needed. The instrument air lines to the control room, utility tunnel, and crane bay area are equipped with isolation valves and oil adsorbers at the tie-in point to the main instrument air supply. The instrument air required for the loop cooling water controls located inside the reactor containment vessel is provided through takeoffs from two existing 2-in.-IPS instrument air headers located inside the vessel.

5.17.3. Project References

Preliminary Design Drawings (CF 61-6-2)

Process Flowsheet, Plant and Instrument Air Systems D-RD-10498

5.18. Communications and Alarm Systems[6]

5.18.1. Commercial Telephone (Intercom)

Telephone communication service throughout the reactor plant is provided by commercial installations, one serving the plant proper and one serving the charge machine and service machine areas. Intercommunication between these two systems is provided.

Telephone stations for the experimenters are connected with the reactor plant system and are located at each of the following points: experimenter's cells (one per cell), experimenters' control room (one per loop), experimenter's crane bay (two stations), experimenter's power substation, experimenter's fabrication shop, and experimenter's utility tunnel (two stations). Each of these telephone stations may communicate with any other station on the system at the EGCR site.

5.18.2. Paging System

The plant public address (PA) system utilizes cable circuits which are separate and independent of the commercial telephone system circuits. Major components of the PA and commercial telephone systems are in a common telephone equipment room, which is located in the turbine building. The PA system employs ceiling and/or wall-type speakers and can be operated for paging from the commercial telephone by dialing predesignated code numbers. A separate microphone, independent of the telephone system, may also be used. Experimenters' paging system speakers are installed in all areas listed in paragraph 5.18.1.

5.18.3. Private-Line System

A commercial private-line system is provided in lieu of the sound-powered telephones originally specified (see KE drawing E109). This system may be used independently of the other plant telephone systems. Each telephone location outside the reactor control room can initiate a call to the reactor control room by means of a buzzer system. The private-line system is powered from the same power supply as the commercial equipment.

---

[6]Letter — L. H. Jackson to P. D. Bush, dated December 23, 1960, Subject: Communications and Alarm Systems — Hazards Summary Report.

5.18.4. Miscellaneous

Sound-power telephones are located in the experimenters' cells, personnel airlock, and the crane-bay area adjacent to the airlock hatchway so that communications may be maintained with personnel entering and leaving the experimenters' cells through the airlock.

5.18.5. Alarm Systems

Alarm systems include fire alarm, supervisory alarm, and evacuation alarm. Fire and supervisory alarms annunciate in the reactor control room. Certain fire and supervisory alarms annunciate in the guardhouse.

The fire and supervisory alarm systems are connected into separate supervisory circuits. The evacuation alarm system is connected into a separate but nonsupervised circuit and is manually operated from the reactor control room. Fire alarm boxes and gongs are located in the following areas: experimenter's utility tunnel (north entrance), experimenter's utility tunnel (south entrance), experimenter's control room, experimenter's crane bay, and experimenter's substation. Evacuation alarm horns are located as follows: experimenter's control room, experimenter's utility tunnel, experimenter's cells (one per cell), and experimenter's crane bay.

6. PRIMARY AND SECONDARY CONTAINMENT DESIGN

6.1. Loop Containment Philosophy

The general containment philosophy for the EGCR experimental loops may be summarized as follows: radioactive experimental loop gas will be doubly contained with respect to the reactor containment vessel and the surrounding environment at all times and for all normal and abnormal loop operating conditions, except during removal of experimental fuel assemblies. In essence, this means that any uncontrolled radioactive gas release from the primary loop piping will be fully contained unless the release occurs during the removal of a fuel assembly, in which case the loop gas may be released to the reactor containment vessel. Any failure of the secondary containment system as a result of excessive internal pressure must preferentially dump the radioactive loop gas to the reactor containment vessel rather than permitting uncontrolled release to the surrounding environment.

When the reactor is at pressure without an experimental assembly in a given loop, the containment philosophy for that loop will be somewhat altered. For this condition, the loop must provide primary containment of the reactor gas outside of the reactor through-tube and outside of the loop piping in the reactor pressure vessel extension from the bottom nozzle. The release of reactor gas resulting from a failure of this primary containment will be contained within the loop piping or released to the main containment vessel.

The loop secondary containment system is designed to hold the entire mass of experimental loop gas with a maximum leak rate limited to 1.0 wt % of the contained gas per 24 hr. The reactor gas system is considered to be a part of the loop secondary containment system. During experimental loop operation, the loop secondary containment system consists of the reactor gas system, the loop containment piping, the containment vessel around the evaporative cooler, the intermediate steam system of the evaporative cooler, and the experimenters' cell.

The containment region surrounding the primary piping in the top nozzle tee and the primary loop piping from the top nozzle tee to the experimenters' cell (including the containment region around the evaporative cooler) is a part of the upper sniffer gas system. The lower sniffer gas system includes the containment region around a short section of pipe between the experimenters' cell and the pressure vessel extension. Both sniffer gas volumes are continuously monitored for leakage into or out of the system. The integrity of the sniffer systems (secondary containment) is monitored by pressurizing the regions with air to a pressure of 20 psig before starting the loops.

The upper sniffer region is designed to contain a steady-state internal pressure of 675 psia at 650°F. The lower sniffer region is designed

to hold a steady-state internal pressure of 1100 psig at 975°F. Thus, the upper sniffer region is designed to contain the reactor gas design pressure and the maximum possible loop gas pressure (after depressurization into the containment volume). A rupture disk (rated at 675 psia) between the sniffer region and the experimenters' cell will protect the upper region from overpressure (see sec. 6.4). The lower sniffer region is designed to withstand the full reactor gas pressure (300 psig) and, also, the maximum possible loop gas pressure.

The reactor pressure vessel extension is employed as the secondary containment around the primary loop piping extending from the experimenters' cell to the reactor pressure vessel in the lower pipe chase. The reactor gas system is used as loop secondary containment in the bottom nozzle tee and around the reactor through-tube. The lower sniffer region is interposed between the reactor pressure vessel extension and the experimenters' cell. This intermediate region prevents depressurization of the reactor directly to the experimenters' cell as the result of a single failure of the reactor pressure vessel extension.

The experimenters' cell houses most of the experimental loop equipment and is designed to provide secondary containment of loop gas in the event of a rupture of the in-cell piping or components or other loop gas releases to the cell. In order to provide full containment of the loop gas, each experimenters' cell is lined with welded carbon steel sheets and is designed to withstand an internal pressure of 12 psig at a maximum temperature of 150°F. Under these conditions, the leakage is limited by adequate design and fabrication to a maximum of 1.0 wt % of the contained gas at 12 psig over a 24-hr period.

Although the experimenters' cell is designed to contain the entire loop gas inventory under all loop operating conditions, it is not designed to contain the reactor gas inventory. To prevent overpressurization of the cell, a 32-in. rupture disk is installed between the cell and the reactor containment vessel. This disk is designed to relieve the cell if the pressure exceeds 10 to 12 psig. This will happen only if the experimental loop ruptures at one point inside the cell and another point inside the reactor pressure vessel or its extensions.

The relative volumes of the experimental loop and experimenters' cell are such that complete depressurization of a 1000-psia loop into the cell will not raise the cell pressure above 10 psig. The most recent calculations indicate that the cell pressure following depressurization of a 1000-psia CO_2 loop (the most severe condition) is approximately 9 psig.

Since the cell rupture disk serves as a containment barrier between a potentially radioactive atmosphere (following loop rupture) in the experimenters' cell and operating personnel in the reactor containment vessel, it is felt that the rupture disk should be sized for a minimum factor of safety of 2; that is, loop operation should be predicated upon

a maximum cell pressure of one-half the minimum rupture disk burst pressure for the case of an in-cell rupture or other release of loop gas into the cell (this would correspond to 5 psig for the current rupture disk). Adoption of this limitation will require that (1) loop operation be limited to a pressure slightly above 500 psia for a CO_2 loop occupying a single cell or (2) the experimenters' cell be expanded to occupy two standard cells if 1000-psia CO_2 operation is desired. Since additional cells are available, it is presently anticipated that for Title II loop design two cells will be occupied by each loop. This will double the expansion volume and thereby limit the cell pressure to below 5 psig.

The experimenters' cell, like the reactor containment vessel, is normally open to the atmosphere via a vent valve, filter, and the EGCR stack, and consequently must depend upon the operation of various valves to isolate the cell when secondary containment is required. Operation of the cell vent valves is triggered by excessive airborne radioactivity in the cell atmosphere or exhaust duct. No attempt is made to contain the loop gas in the cell unless the specific activity of the cell atmosphere exceeds the maximum permissible value.

If the specific activity of the cell atmosphere initiates cell isolation, a number of interlocks prevent violation of the closed secondary containment system. It becomes impossible to open the cell drain valves and the cell ventilation valves, and the automatic valves on all gas supply lines to the cell will close and remain closed, thus precluding the possibility of overpressurizing the sealed cell as a result of a failure in some gas supply system.

In order to insure the integrity of the cell containment system, all normally used piping into and out of the cell which could conceivably serve as a vent to the outside environment will contain two automatic valves in series. This will not include water lines to and from the cell as long as the residual water pressure is greater than 12 psig. All gas lines entering the cell will contain two check valves in series and all gas and drain lines leaving the cell will contain two automatically controlled valves in series.

In view of the containment philosophy set forth in the first two paragraphs of this section, a number of mandatory operating procedures will be imposed for operating the loops. In many cases maloperation will be prevented by interlocks. The cell isolation valves between the experimenters' cell and the reactor containment vessel will always be closed before opening the cell other than through an airlock. The cell ventilation valves cannot be opened or the roof hatch plugs removed as long as radioactive loop gas is present in the cell. This includes loop gas contained in the loop piping and/or the gas storage tanks. Moreover, if the mainstream piping (including the filter) contains an appreciable amount of radioactive particulate matter, the in-cell loop piping between the cell isolation valves must be at atmospheric pressure before the cell secondary containment is violated.

When operating the reactor with no experimental assembly in the loop, it is currently planned to pressurize the through-tube to reactor gas pressure to prevent long-term creep of the through-tube. However, as a safety precaution, the through-tube will be pressurized to reactor pressure only if the cell secondary containment is intact. Consequently, a rapid depressurization of the through-tube which conceivably could cause a simultaneous rupture of the through-tube will not result in depressurization of the reactor through an open cell to the surrounding environment. The rapid depressurization might be due to a cell isolation valve failure or an in-cell piping failure. The through-tube rupture might be caused by the sudden application of a large buckling pressure.

When the experimenters' cell is open and the reactor is at pressure, the through-tube will be depressurized to some nominal value in order to provide monitoring of the integrity of the primary loop piping. The buckling force on the through-tube will now be a constant force, irrespective of the integrity of the loop piping. Under these conditions a double failure is not considered credible.

As pointed out earlier, the experimenters' cell is normally vented to the atmosphere. Consequently, there is no way to ascertain whether or not the cell containment is intact. To provide some measure of security, cell leak tests will be performed at convenient intervals during loop operation. In addition, a cell leakage test will be made each time major maintenance is performed inside the cell.

Project References

Design Criteria (CF 61-6-3)

Experimental Loop Containment Criteria Code H.20

6.2. Allowable Stress

6.2.1. Design Basis

The EGCR experimental loop piping and components are subject to a diversity of loadings that create stresses of different types and patterns in the structural materials. These loadings include (1) internal or external pressure, (2) dead weight, (3) thermal expansion reactions, and (4) transient thermal gradients or mechanical loads.

The stresses resulting from loads (3) and (4) are relatively high and not necessarily of constant intensity. At high temperature, the thermal expansion reaction stresses and transient thermal gradient stresses may not be sustained because of relaxation or creep. This phenomenon of yielding in the elastic range or flow in the plastic stage presents a

problem different from that encountered in the analysis of structures or machinery which operate at relatively low temperatures and therefore in a state of steady stress.

The approach to this problem of thermal stresses at high temperatures in the EGCR experimental loops has been to apply the methods outlined in the Navy code[1] as a design basis. According to this code all thermal gradient stresses can be conservatively considered as transients, with three categories of operation:

Class I. All conditions of plant operation during which the variations of system pressure and coolant temperature are less than ±15% of the values existing at the start of the transient.

Class II. Warm startup and other startup conditions not included in Class I and Class III operation.

Class III. Cold startup and emergency operation.

According to the Navy code design philosophy, certain of the allowable stresses are such that the yield strength of the material may be exceeded when the stress effects of transient thermal conditions are combined with the steady-state stresses. Justification of this philosophy entails the comparison of the combined stresses with an allowable stress limit based on experimentally measured cyclic strain-to-failure data. In order to obtain the combined stresses, the transient thermal stress effects are calculated elastically and then combined with the steady-state stresses. The resulting stress for an acceptable design must be below the allowable stress based on the cyclic strain-to-failure data. The allowable stress based on these data is proportional (with a safety factor) to the measured strain. Also, for the purposes of the EGCR experimental loop design, the calculated steady-state stresses are not considered acceptable unless they fall within the allowable stresses defined by the ASME and ASA codes[2] (including nuclear code cases).

The Navy code design procedure has not, as yet, been accepted by ASME, but it is used by the Bureau of Ships and engineering evidence exists to support it. For example, stainless steel tubes with combined stresses of the order of 43 000 psi (approximately twice the ASME code allowable stress for steady state) are currently in use in the MTR;[3] and the KAPL 3 × 3 ETR in-pile tube is designed to have stresses as high as 68 800 psi.[4] In addition, type 347 stainless steel tubes have been test cycled to a pressure stress of 16 750 psi (with thermal-gradient stresses up to 98 680 psi) during eight pressure cycles and to a thermal-

---

[1]Tentative Structural Design Basis for Reactor Pressure Vessel and Directly Associated Components, PB 151987 (OTS).

gradient stress of 98 680 psi (with pressure stresses up to 16 750 psi) during 10 020 thermal cycles with no evidence of dimensional growth or cracking.[5] For this test the stress intensities for the test specimen were of the order of 113 000 psi. According to the ASME code, Section VIII, Code Case 1273N, the allowable stress intensity would be 1.5 times the allowable value obtained from Table UHA-23 (Section VIII), or about 25 000 psi.

Acceptance of the Navy code as a design basis for the EGCR experimental loops has included defining Class III loop operation as a maximum of 500 cycles. This will permit, on the average, about two complete experimental loop shutdowns per month over the expected 20-year reactor life. Class I and Class II operation have been defined as 100 000 and 2500 cycles, respectively. It is recognized that the Navy code is primarily intended for pressurized-water reactors. It is further recognized that structural material behavior at elevated

---

[2]In the ASME code, the combined primary stresses (conventionally calculated code stresses) and steady-state thermal stresses are limited to 1.5 times the S values of Section VIII (Code Case 1273N). Other stresses such as transient thermal or mechanical shock are limited only by the requirement that "... particular consideration shall be given to these effects with a view to obtaining the desired life of the vessel" (Code Case 1273N-1 item 7).

The American Standard Association code for pressure piping (ASA B31.1) recognizes the concept of "stress range" as the criterion for the safety of piping systems; service failures are related to cyclic rather than static conditions. The expansion stress range (in psi) is set by the code at:

$$S_A = f(1.25S_c + 0.25S_h) ,$$

where

S_A = allowable expansion stress range,

S_c = allowable stress in cold condition,

S_h = allowable stress in hot conditions,

f = stress range reduction factor for cyclic conditions.

[3]M. H. Bartz, Performance of Metals During Six Years Service in the Materials Testing Reactor, Second United Nations International Conference on Peaceful Uses of Atomic Energy, P/1878, 1958.

[4]H. E. Barue, An Evaluation of the KAPL 3 × 3 ETR In-Pile Tube Design, KAPL – M-HEB-1, 1957.

[5]S. Bigelow, Thermal Cycling Test of Type 347 Stainless Steel In-Pile Tubes, KAPL-2009, March 17, 1959.

temperatures is not completely determined. However, design procedures, as outlined in the Navy code, are believed, from engineering judgment, to be the best available at this time. Allowable stresses for elevated temperature to be used in the EGCR experimental loops are included in the following section.

6.2.2. Allowable Stresses

The maximum allowable stress intensities for various materials are given in Table 5-1 of the Navy code. Since the Navy code was primarily intended for pressurized-water and boiling-water reactors, allowable stresses are not given for temperatures above 700°F. Estimated extensions to the higher working temperatures of the EGCR experimental loops are indicated in Table 6.2.1 for type 347 stainless steel. The nomenclature of Table 6.2.1 is listed below:

S_m = average stress or membrane stress intensity allowable by ASME code,

S_p = primary plus secondary allowable stress intensity (stresses resulting from pressure, mechanical forces, pipe reactions, and their combinations),

S_{ymin} = minimum yield strength of the material, taken as endurance limit without a safety factor,

S_{umin} = minimum ultimate tensile strength of the material,

S_s = allowable mean stress intensity for fatigue evaluation,

S_b = limit of elastic behavior,

S_{aI}, S_{aII}, S_{aIII} = allowable amplitude of alternating stress intensity for Class I, Class II, and Class III operation, respectively.

The values of S_m were taken from the ASME code, Section VIII. The revised Navy code values will be rounded values from the ASME code.[6] Values of S_{ymin} and S_{umin} were obtained by multiplying Allegheny Ludlum Corp. "blue sheet" values for S_y and S_u by the ratio of the "specified minimum room-temperature tensile strength" to the "measured short-term room-temperature tensile strength." The stress intensity, S_b (the limit of elastic behavior), was extrapolated from Fig. 5.2-4 of the Navy code. Actual test data[7] are listed as S_b' for comparison. The values of the allowable alternating stresses were estimated by applying Miner's hypothesis, that is, a usage factor of 0.4, to strain-fatigue data determined by

---

[6]W. E. Copper, KAPL, private communication.

[7]Heat Treatment and Physical Properties of the Austenitic Chromium-Nickel Stainless Steels, Nickel Alloy Steels, Section 7, Data Sheet A, 1947.

Table 6.2.1. Maximum Allowable Stress Intensities for Type 347 Stainless Steel

Minimum room-temperature tensile strength = 75 000 psi

Metal Temperature (°F)	S_m (psi)	S_p (psi)	S_{ymin} (psi)	S_{umin} and S_s (psi)	S_b (psi)	S'_b (psi)	S_{aI} (psi)	S_{aII} (psi)	S_{aIII} (psi)
68	18 750	26 420	29 360	75 000	43 000	40 000	21 500	70 000	117 000
400	15 800	26 500	29 440	59 170	34 000		17 000	50 000	90 000
700	14 800	22 010	24 460	56 720	33 000		16 500	47 600	78 000
800	14 550	21 480	23 870	55 900	32 000	32 000	16 000	46 800	74 000
900	14 100	20 650	22 950	53 570	30 500		15 250	46 000	70 000
1000	13 500	19 840	22 040	51 080	28 500	32 000	14 250	39 500	61 000
1050	13 100	19 300	21 450	48 830	25 500		12 750	36 250	56 500
1100	12 500	18 770	20 860	46 570	22 000		11 000	33 000	52 000
1150	8 000	12 000	20 280	44 320	20 280		10 140		
1200	5 000	7 500	19 680	42 060	19 680	30 000	9 840		

Baldwin et al.[8] The strain-fatigue data were converted to a stress amplitude versus cycles-to-failure plot by multiplying the strain range by E/2, where E is the modulus of elasticity. A plot of the allowable stress amplitude versus the number of cycles is presented in Fig. 6.2.1. For metal temperatures of 1150 and 1200°F, the values of S_p were taken as 150% of S_m, although S_p is normally taken as 90% of S_m, because, at 1150°F and above, S_p would be higher based on long-term stress-rupture characteristics, as shown in Fig. 6.2.2.[9] Since extrapolation of values of S_b from Fig. 5.2-4 of the Navy code gave values below the yield strength, S_b was taken as equal to S_y at 1150 and 1200°F.

Carbon steel (SA-212, grade B) is used for the containment piping in the EGCR experimental loops. The maximum allowable stress intensities for this material are given in Table 6.2.2. The S_m values of Table 6.2.2 were taken from Table USC-23 of the ASME Pressure Vessel Code, Section VIII. All other data of Table 6.2.2 are from Table 5-1 of the Navy code.[1] The maximum allowable stress intensities for other materials used in loops are given in the project reference listed in Section 6.2.5.

The stress intensities listed in the tables of the project reference were taken as the maximum allowable stresses for the EGCR experimental loops, as appropriate. All EGCR experimental loop stresses, except in the compressors, will be within these Navy code allowable stresses and within S_m and S_p values for the appropriate stresses given by the ASME code.

Calculations were also performed which showed that no deleterious effects would result from distortion, creep, or stress-rupture over the expected lifetime of loop components. The methods of Miller[10] were used to examine the progressive expansion, i.e., the thermal-stress ratchet mechanism, of the loop.

6.2.3. Design Temperature and Pressure

The purchase specification for the compressors (JS-P3-88) for the EGCR loops states that the compressors are to be capable of operation at several temperature and pressure conditions for given helium and CO_2 mass flow rates. The maximum inlet temperature-pressure condition listed is 900°F at 991 psia. This operating condition is based on the assumption that operation with a high compressor inlet temperature will be difficult

---

[8]E. E. Baldwin et al., Cyclic Strain Fatigue Studies on AISI Type 347 Stainless Steel, ASTM Proceedings 57, 561-86 (1957).

[9]Timken Roller Bearing Co., Digest of Steels for High Temperature Service, 6th Ed., 1957.

[10]D. R. Miller, Thermal Stress Ratchet Mechanism in Pressure Vessels, KAPL-1955, Aug. 1958.

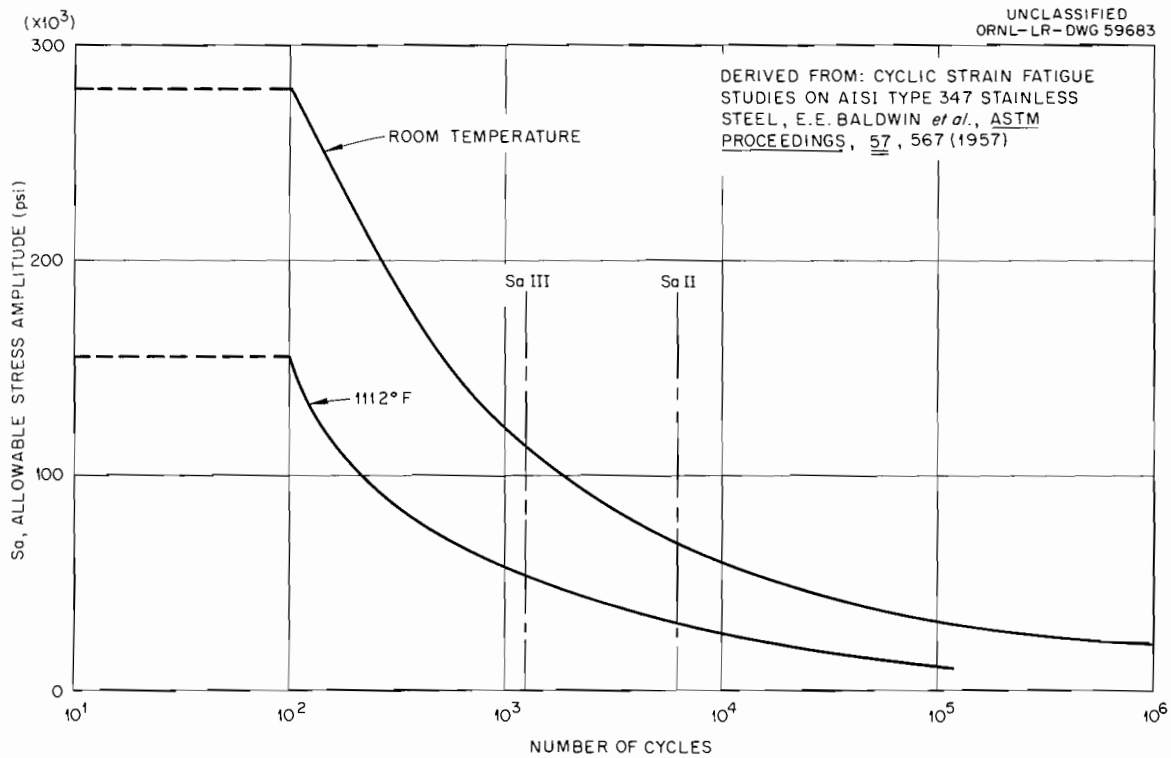

Fig. 6.2.1. Design Fatigue Strength Curves — Type 347 Stainless Steel.

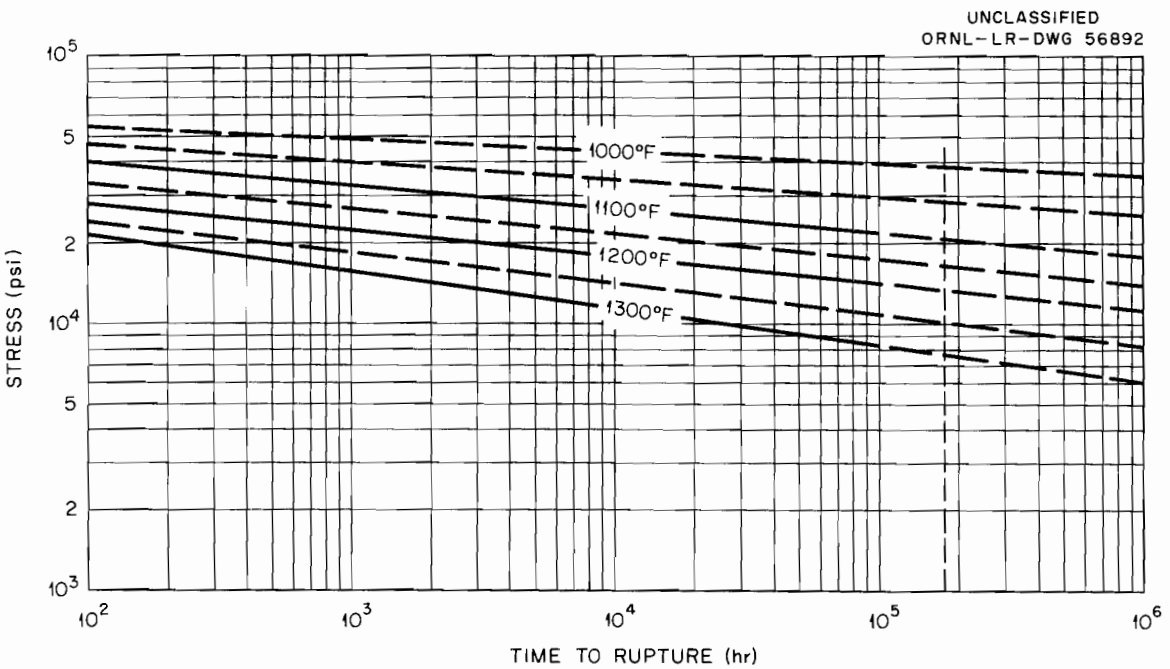

Fig. 6.2.2. Stress-Rupture Curves for type 347 Stainless Steel.

Table 6.2.2. Maximum Allowable Stress Intensities for SA-212, Grade B, Carbon Steel

Minimum room-temperature tensile strength = 70 000 psi

Metal Temperature (°F)	S_m (psi)	S_p (psi)	S_{ymin} (psi)	S_{umin} and S_s (psi)	S_b (psi)	S_{aI} (psi)	S_{aII} (psi)	S_{aIII} (psi)
70	17 500	34 000	38 000	70 000	42 000	21 000	45 000	66 000
200	17 500	32 000	36 000	70 000	42 000	21 000	45 000	66 000
400	17 500	29 000	32 000	70 000	42 000	21 000	45 000	66 000
600	17 500	25 000	28 000	70 000	42 000	21 000	45 000	66 000
700	16 600	23 000	25 000	66 000	42 000	21 000	45 000	66 000

to attain in the first model of this critical development item and will have to be kept to a minimum by operation of the loop heater. Operation of this heater will allow the loop cooler to lower the loop gas temperature to about 900°F ahead of the compressor. The heater will subsequently reheat the gas to the required 950°F ahead of the in-pile experimental section of the loop.

The 900°F–911 psia condition is being used by the compressor vendor as the design temperature and pressure for the compressor pressure vessel. If development experience proves the compressors to be capable of operation at a higher inlet gas temperature (at a proportionally lower pressure), the pressure vessels for a second generation of compressors to be built sometime in the future will be designed for higher temperature operation at full loop design pressure.

Selection of the design temperatures and pressures for the remaining components of the EGCR experimental loops was based on the assumption that the second-generation compressors will become available and will then permit operation at 950°F and 1000 psia (1050°F experiment outlet) without the loop heaters. An allowance of 25°F was added to take care of instrumentation variations. The design pressure, which is defined as the maximum allowable working pressure, was set at 110% of the loop operating pressure. The resulting design conditions are given in Table 6.2.3. It must be emphasized, however, that the experimental loops will not be permitted to reach these design conditions until the second-generation compressors become available.

Table 6.2.3. Design Temperatures and Pressures for Experimental Loops Cooled with Helium or CO_2

Component	Design Pressure (psia)	Design Temperature (°F)
Through-tube	1100	1075
Loop primary piping between upper tee section and cooler	1100	1075
All other primary piping	1100	975
Upper tee sections	1100	1075
Lower tee sections	1100	975
Heater	1100	1150
Filter	1100	975
Cooler	1100	1075
Compressors (present)	991	900
Compressors (future)	1100	975

The through-tubes are designed for a pressure difference of 800 psi across the tube, based on pressures of 1100 psia internal and 300 psia external. However, the tube will sustain either the full 1100-psia internal pressure or the full 300-psia external pressure at the operating temperature of 1075°F. The tube temperature follows reactor gas temperature.

The design pressures and temperatures listed in Table 4.14.3 are consistent with the ASME and Navy code requirements. The ASME code (Section VIII, para. UG-21) requires that the component be designed for the most severe conditions of coincident pressure and temperature expected during normal operation and recommends some margin for surge. The Navy code defines the design pressure as 10–25% in excess of the normal steady-state operating pressure.

6.2.4. Relief-Valve Settings

The EGCR experimental loop relief valves will be set in accordance with the requirements of the ASME code (Section VIII, para. 125 and 133). Relief-valve settings are not adequately covered in the Navy code.

For the first generation of loop compressors the relief valve adjacent to the compressors will be set to start opening at 991 psia (for a maximum compressor temperature of 900°F) and will be fully open at 1090 psia. The loop operating pressure will have to be set somewhat below 991 psia to prevent excessive valve chatter. For the second generation of loop compressors the relief valves will be set to start opening at 1100 psia (for a maximum compressor temperature of 975°F) and will be fully open at 1210 psia. A loop operating pressure of 1000 psia should be possible without valve chatter.

6.2.5. Project References

Design Criteria (ORNL CF 61-6-3)

Stress Criteria

6.3. In-Cell Piping

6.3.1. Introduction

The mainstream piping for each of the experimental loops connects the through-tube (in-pile section) with the various mainstream loop components, including the mainstream gas cooler, filter, and heater, and with the loop compressors and auxiliary blower. In addition to the mainstream piping there are several auxiliary piping systems associated with each experimental loop. Nearly all the mainstream loop components and auxiliary systems are located inside the experimenters' cell.

The in-cell mainstream piping connects to the out-of-cell mainstream piping at a cell wall penetration located between the experimenters' cell and the reactor containment vessel (see sec. 6.9). The in-cell piping design has progressed through a series of layouts with the latest schematic arrangement shown in Fig. 6.3.1. This layout represents the latest configuration using three bypass check valves in parallel with the compressors.

The experimental facility design for the EGCR has provisions for eight experimenters' cells (see sec. 3.2). Removable bulkheads are provided between adjacent cells. Since the ultimate capacity of the experimental facility is now four experimental loops (small loops TS-2 and TS-3 and large loops TL-1 and TL-4), it is permissible to use two experimenters' cells per loop. A re-evaluation of the in-cell piping and equipment arrangements will be made to determine the advisability of using two cells per loop.

Among the apparent advantages of using two cells per loop are (1) it will reduce the pressure buildup in the cell following a loop depressurization and thereby provide a more reasonable rupture-to-working pressure ratio for the cell rupture disk; (2) it will permit greater flexibility in arranging the primary piping and will probably result in lower pressure drop and reduced pipe reactions; (3) it will provide needed space for the auxiliary blower and for additional components that may be required for improved loop operation, maintenance, or special experiments; (4) it will facilitate the installation of the return pipe from the experimental assembly removal cooling system (see sec. 5.12) by providing an extra containment vessel penetration; (5) it will eliminate the need for a radiation shielding wall inside the experimenters' cell; and (6) it will provide valuable additional space for access and maintenance operations.

6.3.2. Design

The maximum normal operating temperatures and pressures of the loop gas in the in-cell piping are, for loops TS-2, TS-3, and TL-1, 950°F at 1000 psia and, for loop TL-4, 950°F at 315 psia.

Methods outlined in the ASA, ASME, and Navy codes were used as the design basis of the in-cell mainstream piping (see sec. 6.2). The Kellogg Method[11] was used in calculating secondary stresses. The material of construction of the mainstream piping will be type 347H stainless steel fabricated according to material specification MET-RM A-376-TP 347H MOD. 2. The design temperature is 975°F and the design pressure is 1000 psia.

Based on the piping layout shown in Fig. 6.3.1 the moments and forces for each compressor nozzle (as tabulated in Table 6.3.1) are

---

[11]Design of Piping Systems, M. W. Kellogg Company, 2nd ed., John Wiley & Sons, Inc., 1956.

UNCLASSIFIED
ORNL-LR-DWG 65155

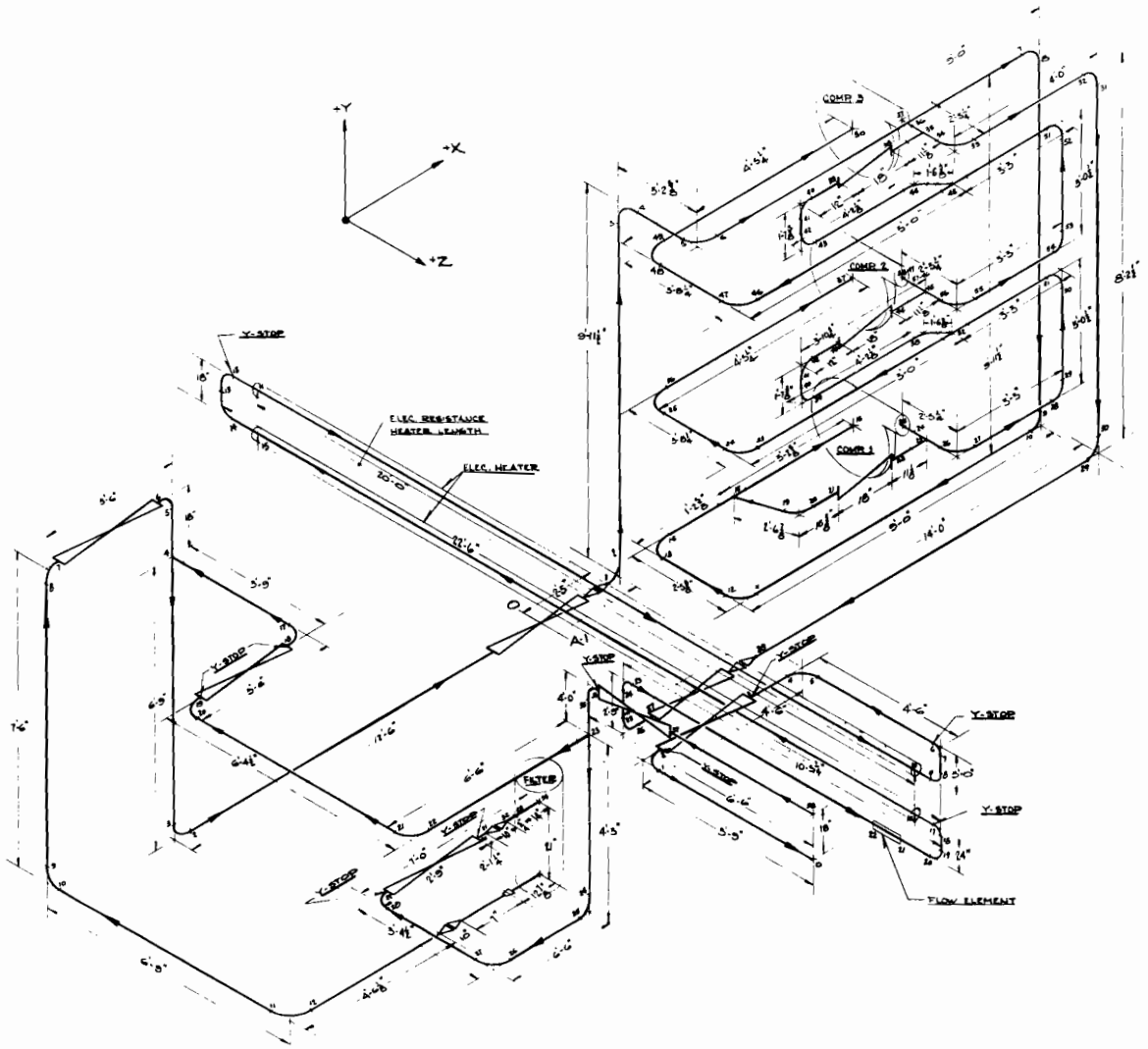

Fig. 6.3.1. In-Cell Piping — Schematic Diagram.

Table 6.3.1. EGCR Compressor Nozzle Loadings

Nozzle	Point[a]	Moments (ft-lb)[b,c]				Forces (lb)[d]		
		M_x	M_y	M_z	ΣM	F_x	F_y	F_z
Compressor No. 1 suction	16	+104, T	+3612, BM	−3339, BM	4920	+1327[e]	+669	+872
Compressor No. 1 discharge	25	+3034, BM	−583, BM	−1428, T	3410	−86	−2232	−693[e]
Compressor No. 2 suction	37	−727, T	−1735, BM	+1400, BM	2350	−450[e]	+162	−242
Compressor No. 2 discharge	47,58	+927, BM	+1089	−4034, T	4290	+393	−243	+211[e]
Compressor No. 3 suction	50	−421, T	−1638, BM	+1853, BM	2510	−344[e]	+18	−281
Compressor No. 3 discharge	37	−1288, BM	−1505, BM	−1182, T	2310	−199	+1688	−121

[a]Points indicated in Fig. 6.3.1.

[b]x, y, and z are the coordinates shown in Fig. 6.3.1, T is torque, and BM is bending moment.

[c]$\Sigma M = (M_x^2 + M_y^2 + M_z^2)^{1/2}$.

[d]x, y, and z are the coordinates shown in Fig. 6.3.1.

[e]In axial direction.

within the maximum allowable values of ±5000 ft-lb and ±6500 lb, respectively.[12,13]

The compressor nozzle loadings and pipe stresses were calculated using the Share No. L03812, IBM 704, Pipe Stress Program, which is based on the Kellogg Method. The design basis and allowable stresses are given in Section 6.2. The piping design criteria are referenced in Section 6.3.4. A Title I design analysis for a preliminary in-cell piping layout was completed (see sec. 6.3.4). Type 347H stainless steel, which is to be used for the mainstream piping in all four experimental loops, is compatible with the coolants, offers adequate weldability, has favorable high-temperature properties, and is less prone to sigma phase formation (embrittlement) than other stainless steels.

Loop coolant pressure drop considerations call for 6-in. pipe for the in-cell mainstream primary piping of loops TS-2, TS-3, and TL-1. Four-inch piping is specified for loop TL-4. The in-cell mainstream piping is insulated with mineral insulation to reduce the cell heat load.

6.3.3. Specifications

Specifications similar to those for the out-of-cell piping will be prepared for the in-cell piping. Welding of the stainless steel primary piping will be in accordance with specification MET RWS-1, and material inspection will be made according to specifications covered in the material and welding specifications MET RMA-376-TP 347 MOD. 2 and MET RWS-1, respectively. After installation, the primary piping will be subjected to a leakage test in accordance with that described by Metz.[14] The vacuum-testing method will be used whenever possible. All leaks of helium greater than 10^{-8} cm^3 (STP)/sec, as measured with a mass spectrometer leak detector, will be repaired. After inspection and leak repairs, the total leak-up rate for the in-cell mainstream piping (exclusive of mechanical seals and equipment) will not be greater than 1/2 μ of Hg in 24 hr. This leak-up rate is comparable to a total helium leak rate of 0.9×10^{-5} cm^3 (STP)/sec for the piping.

6.3.4. Project References

Design Criteria (CF 61-6-3)

In-Cell Mainstream Piping Criteria — Code B.4.0

Design Analyses (CF 61-6-4)

EGCR In-Cell Mainstream Piping

---

[12]Memorandum, H. C. Young to W. D. Gooch, EGCR Compressors, P.O. 94Y-3500, Mounting of Compressors, April 11, 1961.

[13]Memorandum, H. Pouncey (Bristol Siddeley Engines, Ltd.) to W. D. Gooch (UCNC), Your Order 94Y-3500 Nozzle Loads, May 3, 1961.

[14]H. J. Metz, Notes on Helium Leak Detection, ORNL CF 58-1-20, Jan. 10, 1958.

Specifications (CF 61-6-5)

Austenitic Steel Pipe for High-Temperature Nuclear Service	MET-RM-A376-Mod. 2
Austenitic Steel for High-Temperature Nuclear Service	MET-RWS-1

6.4. Out-of-Cell Piping

6.4.1. General

Each experimental loop consists of the loop equipment located in the experimenters' cell external to the reactor containment vessel, a through-tube, and the loop piping inside the containment vessel between the through-tube and the cell. Figure 6.4.1 shows the loop inlet piping from the experimenters' cell to the through-tube and the loop outlet piping from the through-tube to the cell for a typical experimental loop.

In a typical loop, the out-of-cell mainstream inlet piping runs horizontally through a bottom biologically shielded chase from the experimenters' cell wall to the bottom nozzle of the through-tube. The outlet piping runs horizontally through a top shielded chaseway from the top nozzle to the mainstream gas cooler located at the face of the reactor biological shield. The outlet piping from the cooler runs downward in a vertical chaseway to a bottom chaseway where it then runs horizontally back to the experimenters' cell wall. A schematic layout of a typical piping installation is shown in Fig. 6.4.2.

Each experimenters' cell is lined with carbon steel sheet which acts as secondary containment for the loop equipment and piping located inside the cell. Secondary containment piping and biological shielding are provided for the primary loop piping inside the reactor containment vessel (see sec. 6.1).

Definitions. Primary or primary containment piping is the piping which normally contains the loop gas. Secondary or secondary containment piping is that which surrounds the primary piping and which will contain the loop gas if the primary piping should fail.

6.4.2. Operating Conditions

The normal maximum operating temperature and pressure of the primary and secondary piping for each loop is given in Table 6.4.1.

6.4.3. Design

The design of the loop piping inside the reactor containment vessel is based on using expansion loops rather than bellows expansion joints to

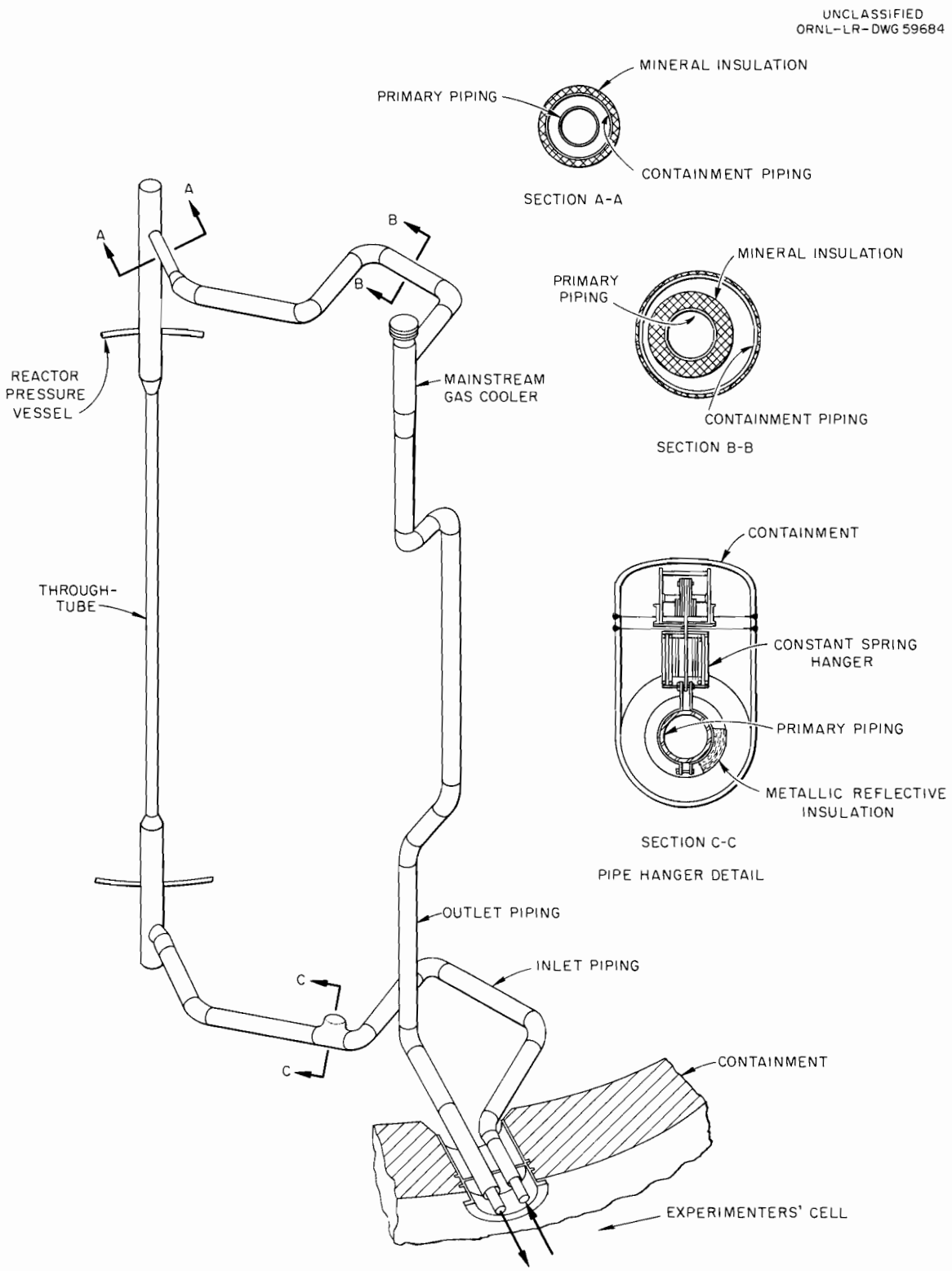

Fig. 6.4.1. Typical EGCR Experimental Loop Containment Piping.

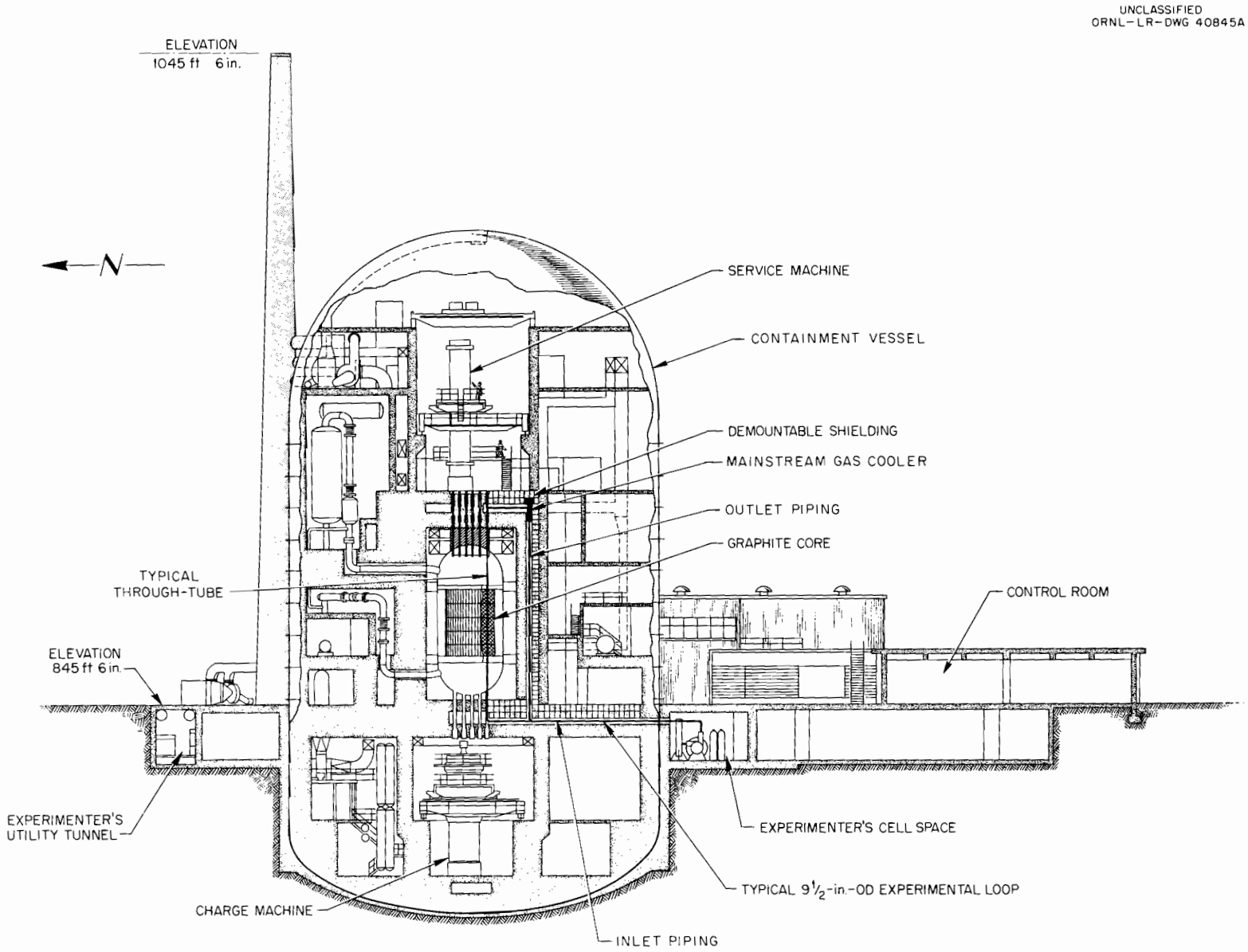

Fig. 6.4.2. EGCR Section View Reactor Building.

Table 6.4.1. Primary and Secondary Piping Normal Maximum Operating Conditions

Location	For Loops TS-2, TS-3, and TL-1		For Loop TL-4	
	Temperature (°F)	Pressure (psia)	Temperature (°F)	Pressure (psia)
Primary containment piping				
Lower chase inlet	950	1000	950	315
Upper chase outlet	1050	1000	1050	315
Vertical and lower chase outlet	950	1000	950	315
Secondary containment piping				
Lower chase inlet	500	350	500	350
Upper chase outlet	500	40	500	40
Vertical and lower chase outlet	500	40	500	40

accommodate thermal expansion. Concentric piping is used to provide secondary containment. The reactor pressure vessel bottom nozzle outer tee and associated secondary containment piping are designed to allow for vertical thermal expansion of the through-tube, thereby eliminating a bellows expansion joint. This design permits the reactor gas to enter the annulus space between the inlet primary and secondary piping. Metallic insulation is specified for this region.

Type 347H stainless steel is specified for the primary piping material for all four loops since this material is compatible with the anticipated loop coolants, has favorable high-temperature properties, is less prone to sigma phase formation (embrittlement) then other stainless steels, and has favorable welding characteristics. The primary piping for loops TL-1, TS-2, and TS-3 is 6 in., and the piping for loop TL-4 is 4 in. Loop pressure drop calculations were performed considering various modes of operation and using either helium or CO_2 as the loop gas (see sec. 4.8). The pipe wall thickness is based on material properties in relation to operating pressures and temperatures. The secondary pipe size is based on available space, primary pipe size, thickness of primary pipe insulation, and the maximum relative thermally induced movement of both the primary and secondary piping during loop operation. The wall thickness of the secondary piping is based on pipe material properties

in relation to the maximum temperatures and pipe pressures during normal loop operating conditions and during primary pipe failure transients. An IBM 610 code was used to evaluate the primary pipe failure pressure and temperature transients for the secondary piping.

The maximum surface temperature of the concrete chaseways in which the piping is located was specified as 120°F. Closed loop, forced-convection, air-cooling systems are provided to control the chaseway temperatures (see sec. 6.5). Both the primary and secondary piping are insulated to reduce heat losses and to reduce the pipe chase cooling load.

Both the primary and secondary piping are designed on the basis of the Navy code, the ASME Boiler and Pressure Vessel Code (1959 Edition), and the American Standard Code for Pressure Piping ASA B31.1-1955 (see sec. 6.2). The primary out-of-cell containment piping for loops TL-1, TS-2, TS-3, and TL-4 will be fabricated of type 347H stainless steel according to material specification MET RM A-376-TP347H MOD. 2. The service pressure for this piping is 1100 psia and the service temperatures are the following:

	Temperature (°F)
Lower chase inlet piping	975
Upper chase outlet piping	1075
Vertical and lower chase outlet piping	975

The secondary out-of-cell containment piping may be ASTM A 106 carbon steel (material specification MET RM A-106 MOD 1) or type 347H stainless steel (material specification MET RM A-376-TP347H MOD 2). Where carbon steel is used, the service temperature will be 650°F and the pressures will be the following:

	Pressure (psia)
Lower chase inlet piping	350
Upper chase outlet piping	675
Vertical and lower chase outlet piping	675

Where stainless steel is used, the service conditions will be the following:

	Temperature (°F)	Pressure (psia)
Lower chase inlet piping	975	350
Upper chase outlet piping	1075	675
Vertical and lower chase outlet piping	975	675

The upper and lower nozzle tees are integral with the loop piping. The loop piping weight, the loop and reactor thermal expansion, and the loop and reactor pressure will cause reactions in the nozzles. The nozzle loadings based on these compounded effects are discussed in Section 4.2.

6.4.4. Stress Analysis

The experimental loop piping is subject to a diversity of loadings that create stresses of different types and patterns in the structural materials. These loadings include (1) internal or external pressure, (2) dead weight, (3) thermal expansion reactions, and (4) transient thermal gradients or mechanical loads. The design approach used in treating these various loads is discussed in Sections 4.2 and 6.2.

In this section "primary stress" is defined as a direct or shear stress developed by the imposed loading which is necessary to satisfy the laws of equilibrium of external and internal forces and moments. "Secondary stress" is defined as a direct or shear stress developed by constraint of adjacent parts or by self-constraint of a structure (includes thermal expansion stress). The "combined stress intensity" includes the primary and secondary stresses (including discontinuity stresses). All thermal gradient stresses are considered as transients.

Primary stresses for both the primary and secondary piping were calculated based on Section VIII (Unfired Pressure Vessels) of the ASME code. Thermal expansion of the primary and secondary piping results in axial, bending, and torsional stresses. All thermal expansion or secondary stresses were calculated using the Share No. L03812, IBM 704, Pipe Stress Program, which is based on the Kellogg method.[11] Cases were run for two conditions: (1) reactor and loop hot and (2) reactor hot and loop cold. Complete input and output data are reported in the Design Analyses (see sec. 6.4.8). As a final check, the pipe stress calculations for a typical primary and secondary piping system were made by the M. W. Kellogg Company. Agreement with the Share No. L03812 Pipe Stress Program results were within 1%.

Thermal Stress. An IBM 704 program was used to calculate the radial and axial temperature distribution in the primary and secondary piping. This information was used to check the thermal stresses which

were initially based on a preliminary heat transfer analysis. The Navy code requires that the stress intensity of the combined primary and secondary stresses (including discontinuity stresses) not exceed the allowable stress values, as determined by the code. The calculated combined stresses reported in the Design Analyses (see sec. 6.4.8) did not exceed the allowable code values.

Transient Analyses. The method of treating the transient stresses is discussed in Section 6.2. Transient analyses for the maximum credible accidents associated with the primary and secondary piping were made. A transient heat transfer analysis was required to determine the effects of a sudden temperature excursion in the primary piping. Failure of the mainstream gas cooling due to a blowout of a loop condenser tube could subject the lower chase primary outlet piping to a rapid decrease in loop gas temperature of approximately 620°F. The resultant stresses were calculated on the basis of the Navy code and were found to be below the allowable stresses.

A failure of the primary outlet piping would result in a rapid increase in the pressure and temperature of the gas in the secondary containment piping. An analysis of this transient condition resulted in calculated stress intensities which were below the allowable ASME code values for type 347 stainless and SA-212, grade B, carbon steels and SA-106, grade B, carbon steels.

6.4.5. Insulation

Based on experimental heat transfer data from Orenda Engines, Ltd. of Canada, (see sec. 4.13) and calculations to convert this data to helium service, 2 in. of reflective insulation was specified for the primary lower chase inlet piping. Metallic reflective insulation was specified for this section of piping because the annular space is connected to the reactor vessel and contains reactor gas. A series of compatibility tests with respect to reactor gas would have been required to establish the feasibility of using other types of insulation. Two inches of reflective insulation is specified to keep the carbon steel containment piping below 500°F. Use of stainless steel for the containment pipe would permit operation at higher temperatures which would reduce the heat flux; however, this would only increase the problems associated with linear expansion and would increase cost considerably.

Mineral insulation was specified for use on the outlet primary piping because the annulus around this pipe does not contact reactor gas. Unibestos, a mineral insulation manufactured by the Union Asbestos and Rubber Company, was specified for application on all stainless steel piping. This material was chosen because the sodium silicate binder used with Amosite asbestos fibers gives a mechanically strong product which has a tendency to inhibit chloride stress corrosion of stainless steels. Experimental work by the Mine Safety and Appliance Company is

reported in a recent ORNL report[15] which recommends the use of Unibestos insulation for stainless steel piping installations (this is the material chosen for insulating the N.S. Savannah piping). Because of space limitations, approximately the first 8 ft of outlet loop piping does not have insulation on the primary pipe. Stainless steel is used for both primary and secondary piping in this section, and the secondary piping is insulated with mineral insulation.

The heat flux is regulated by applying mineral insulation to the exterior of all containment piping. Heat loss to the pipe chases will be removed by a closed-loop forced-convection air cooling system (see sec. 6.5). Preliminary heat transfer calculations to determine optimum insulation thicknesses were checked with an IBM 7090 heat transfer program.

6.4.6. Sniffer Gas Regions

During operation of an experimental loop, the secondary containment consists of the reactor gas system and the secondary containment piping, the intermediate steam cooling system of the mainstream gas cooler, and the experimenters' cell.

The secondary containment piping forms two regions. One region surrounds the primary piping in the upper nozzle tee and the primary piping from the upper nozzle tee to the experimenters' cell, including a secondary containment vessel around the evaporative cooler. The other containment region consists of a small annular pipe section in the lower chase piping between the experimenters' cell and the loop containment piping, which is filled with reactor gas. Both the upper and lower containment regions are continuously monitored by the sniffer gas system for leakage into or out of the system.

The upper containment region is designed to contain the full reactor gas pressure or loop gas during operation at the maximum loop pressure. A rupture disk rated at 675 psia between the sniffer region and the experimenters' cell protects the upper sniffer region from overpressurization. The rupture-disk outlet leads to the experimenters' cell via a three-way valve. When cell containment is required (see sec. 6.1), this valve is positioned to direct the flow from the rupture disk into the cell. If cell containment is not required, this valve is positioned to direct its flow into the reactor containment vessel. An alarm is provided in the reactor control room to warn the reactor operator if this valve is directed to the cell when cell containment is not required because the rupture disk is providing the only secondary containment of the reactor

---

[15] L. D. Schaffer and J. A. Klapper, Investigation of the Effects of Wet Chloride Bearing Thermal Insulations on Austenitic Stainless Steel Pipe, ORNL-3146.

gas. An alarm is provided in the experimenters' control room to warn the loop operator if the valve is directed into the reactor containment vessel when cell containment is required. In this case the rupture disk constitutes the only secondary containment of loop gas between the loop and the reactor containment vessel.

The secondary containment piping around the primary piping from the cell to the reactor in the lower pipe chase contains reactor gas and is essentially an extension of the reactor pressure vessel. A short section of containment piping containing sniffer gas is interposed between the reactor gas portion and the experimenters' cell. This prevents depressurization of reactor gas to the experimenters' cell as a result of a single failure of the secondary containment piping. A complete description of the operation of the sniffer gas system is given in Section 5.15.

6.4.7. Partial Installation

The major part of the vertical outlet piping for all loops will not be initially installed. Loop piping within the experimenters' cells will be deferred until loop construction is authorized. The decision to delay installation of much of the piping requires that provisions be made for temporary installation of the piping to be initially installed. Welded caps for initial installation have been incorporated in the design drawings and provision will be made for temporary pipe supports which will be removed when the future piping and equipment is installed. Temporary welding caps will be attached to the primary outlet piping ends near the future gas cooler and at the ends of the primary and secondary inlet piping at the experimenters' cell penetrations. Pressure-tight caps will be used at the secondary outlet piping near the future cooler and on the ends of the horizontal outlet piping which terminates at the experimenters' cell wall.

6.4.8 Project References

Design Criteria (CF 61-6-3)	
Out-of-Cell Mainstream Piping Criteria	Code A.4.0
Design Analyses (CF 61-6-4)	
Out-of-Cell Mainstream Piping	
Preliminary Design Drawings (CF 61-6-2)	
Stress Analysis of TL-1 Inlet Piping Plan	E-RD-10170
Stress Analysis of TL-4 Inlet Piping Plan	E-RD-10171
Stress Analysis of TS-2 and TS-3 Inlet Piping Plan	E-RD-10172
Stress Analysis of TL-4 Outlet Piping Plan	E-RD-10341
Stress Analysis of TL-4 Outlet Piping Elevation	E-RD-10342
Stress Analysis of TS-2 and TS-3 Outlet Piping	E-RD-10358

Stress Analysis of TS-2 Outlet Piping Elevation	E-RD-10359
Stress Analysis of TS-3 Outlet Piping Elevation	E-RD-10360
Stress Analysis of TL-1 Outlet Piping Plan	E-RD-10374
Stress Analysis of TL-1 Outlet Piping Elevation	E-RD-10375
Containment Anchor Assembly for Loop TL-4	E-RD-10381
Piping Details Sheet No. 2 for TL-1 Outlet Piping	E-RD-10385
Specifications (CF 61-6-5)	
Inner and Outer Chase Piping Subassemblies for EGCR Experimental Loops	JS-128-127
CPFF Project Nondeferred EGCR Loop Installation	JS-128-131
Steel Pipe for High-Temperature Nuclear Service	MET-RM-A106-MOD. 1
Austenitic Steel Pipe for High-Temperature Nuclear Service	MET-RM-A376-MOD. 2

6.5. Pipe-Chase Cooling System

The experimental loop piping inside the reactor containment vessel is located in concrete pipe chases (see sec. 6.4). In general, these chases are 4 ft high and 3 to 18 ft wide and are separated from inhabited areas by 4 ft of concrete shielding. The heat loss from the loop piping must be removed from inside the pipe chase by a cooling system. The inner surface temperature of the concrete pipe chase will be limited to 50°F above building ambient temperature. The 50°F differential was selected because surface cracks develop on the tension side of heated concrete members, concrete loses compressive strength with increasing temperature, and high moments and forces would be introduced by the relative thermal growth of concrete members with respect to structural members in the reactor containment vessel.

A design temperature of 120°F for the inner surface of the concrete pipe chase was selected, based on 70°F for the ambient building temperature plus the 50°F allowable differential temperature. For this design condition the heat removal can be adequately maintained by direct use of the available 70°F river water in cooling coils.

The heat removal process consists of withdrawing air from the pipe chase, passing it through a cooling coil, and returning it to the pipe chase. A system of air ducts distributes the air throughout the chases to provide proper air flow. The concrete surfaces that receive radiant heat from the piping are blast-cooled with high-velocity air streams. The upper horizontal pipe chase has a cooling system that is independent of the cooling system for the lower horizontal and the vertical pipe

chase. This is necessary to avoid space conflict with the cooling system incorporated into the reactor design to cool the reactor nozzles that protrude through the top and bottom biological shield. The pipe chase cooling units are located outside and adjacent to the biological shield near the ceiling at the ground floor elevation. The ductwork is offset through the shield and enters the vertical pipe chase. Each cooling unit consists of a cooling coil, dust filter, and two blowers (see Fig. 6.5.1). The two blowers are provided as dual protection against overheating the building concrete or the loop containment piping in case of a blower failure. There is a pipe chase cooling system for each experimental loop.

Project References

Preliminary Design Drawings (CF 61-6-2)

Process Flowsheet, Pipe Chase Cooling System D-RD-10323

6.6. Experimenters' Cell Design

In addition to providing a suitable room for housing most of the loop components, the experimenters' cells perform two important functions: (1) they provide secondary containment of the loop gas if a primary containment rupture into the cell occurs, and (2) they provide adequate radiation shielding of the loop piping and components so that personnel can work nearby. This radiation shielding requirement determined the thickness of the cell walls and roof.

The requirements for secondary containment of the loop gas dictated most of the design criteria for the experimenters' cells. In order to contain a rupture of the primary loop piping in the experimenters' cell, the cell is lined with 10-gage sheet metal and is designed to withstand a cell pressure of 12 psig at a maximum temperature of 150°F. The total cell leakage under this condition is specified as not to exceed 1 wt % of the contained air at 12 psig over a period of 24 hr. The leaktightness requirements and tests are discussed in Section 6.13.

Calculations indicate that a rupture of the primary loop system in the experimenters' cell will increase the cell pressure to approximately 9 psig for the worst case (1000-psia loop operation with CO_2). There is a possibility, however, that a subsequent rupture of the primary loop system inside the reactor pressure vessel could release reactor gas into the experimenters' cell via the double loop rupture, thus overpressurizing the experimenters' cell. To take care of this contingency, a rupture disk between the experimenters' cell and the reactor containment vessel is provided to relieve the cell pressure if it reaches 10 to 12 psig. This rupture disk is reinforced by a backup grating on the experimenters'

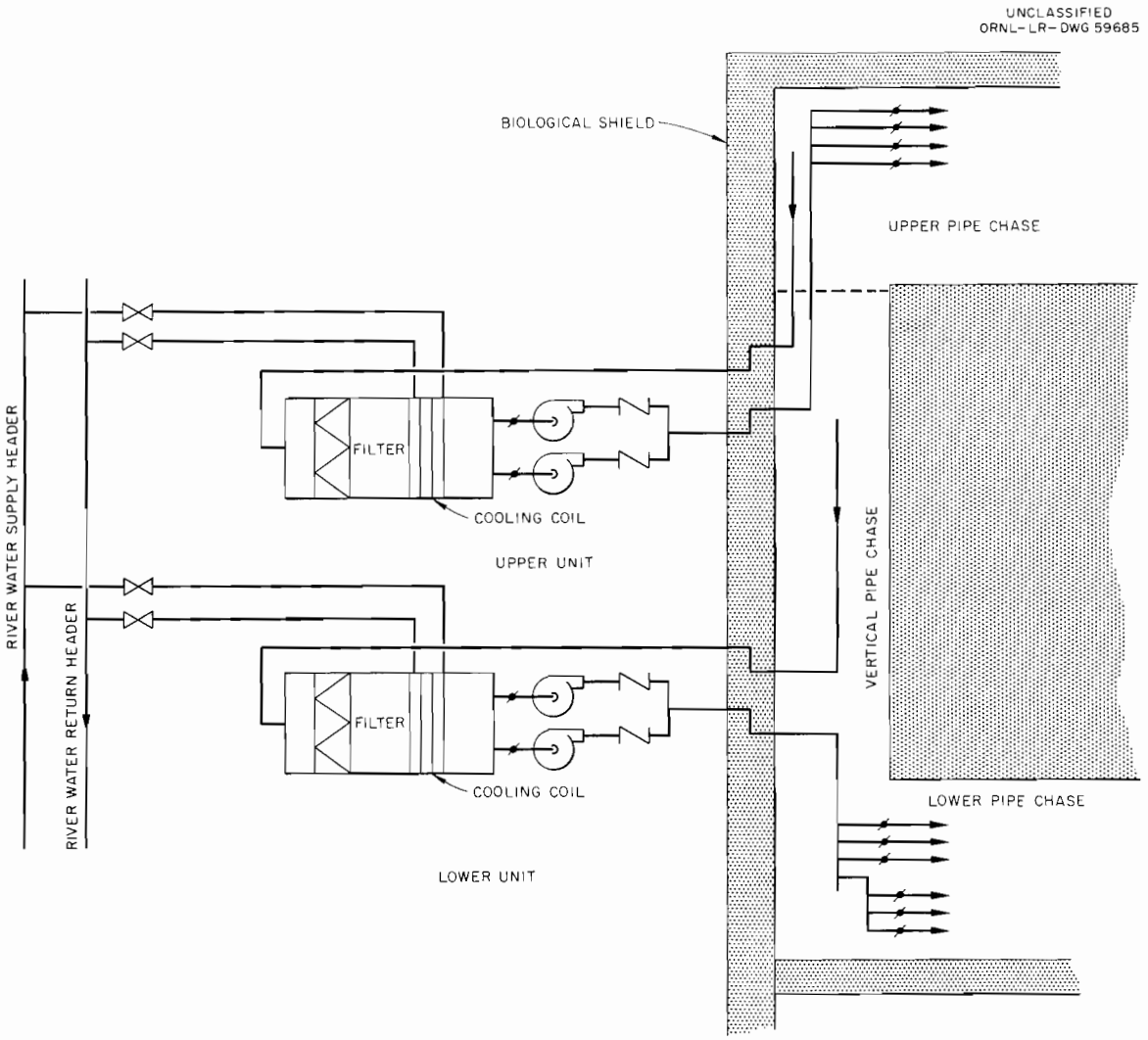

Fig. 6.5.1. Typical Pipe Chase Cooling System.

cell side to prevent bursting of the disk by a high pressure in the reactor containment vessel. The rupture disk is 32 in. in diameter and is sized so that the cell pressure will not exceed 12 psig during the reactor gas blowdown transient (see sec. 6.12).

The cell liner design temperature of 150°F is considered to be more than adequate. For instance, assuming a uniform loop gas temperature of 1050°F and assuming that all the loop gas latent heat is transferred instantaneously to the cell liner, the cell liner temperature will increase only about 20°F. The cell temperature control system normally maintains the cell air temperature at 95°F during loop operation with CO_2 and somewhat cooler during helium loop operation.

The experimenters' cell concrete structure is designed for a roof live load of 500 psf and a floor live load of 1000 psf. Originally, it was planned to pour a concrete floor in each experimenters' cell on top of a 3-in. sand cushion and then seal the floor-to-cell liner joints with a resilient caulking compound. The concrete floor was to provide anchor support for the loop piping. Because of the decontamination problem, it is now planned to delete the concrete and sand floor and to attach the loop pipe anchors to the concrete floor beneath the cell liner. Seal welds will be provided at the liner penetrations.

6.7. Cell Ventilation

6.7.1. Design Considerations

The experimenters' cell ventilation system as originally designed was to maintain a volumetric air flow of 2200 scfm to each cell. In addition to providing sufficient ventilation for personnel working in the cell, this system was designed to provide for removing the heat released in the cell by the loop components and piping (see sec. 6.11). This heat-removal requirement was the criterion for specification of the volumetric air flow; consequently, the required flow rate of 2200 scfm was more than sufficient to ventilate the area to be occupied by personnel.

As the loop design progressed, it was established that the heat load in the experimenters' cells would exceed the heat-removal capacity of the ventilation system as originally specified. In addition there was the problem of cell heat removal during an accident situation in which the ventilation system had to be closed. The solution of these problems finally led to the specification of a separate air-to-water heat-removal system to remove all heat liberated inside the experimenters' cell. At the same time, a detailed analysis of the ventilation system hazards problem led to the adoption of sealed-cell containment; i.e., the ventilation system is to remain valved off at all times when secondary containment of the experimental loop is required (see sec. 6.1).

The obvious advantage of sealed-cell containment is that it does not require the automatic closure of large ventilation valves in the event of loop gas release to the cell. The large 6-in. valves that would be required would operate slowly, at best, or might even fail to operate. The hazards associated with slow closure or failure to close might be overcome by the development of faster and more reliable valves and the use of two valves in series; however, the sealed-cell containment approach appeared to be a better solution, as confirmed by an independent reviewer.[16]

Since the cell ventilation system is no longer required to cool the experimenters' cells, its primary function is now that of providing continuous air flow through the cell during periods of major in-cell maintenance when cell containment is not required. This permitted a reduction of the volumetric air flow rate required per cell from 2200 to 400 scfm, with a maximum demand of 1760 scfm for the entire experimental facility. This flow rate is considered adequate to sweep out undesirable vapors and gases and provide sufficient fresh air to permit up to ten people to work in a cell at one time.

6.7.2. System Description

The experimenters' cell ventilation system is an induced draft system. Air is taken from the experimenters' utility tunnel through a 6-in. butterfly valve located inside the experimenters' cell. The air leaving the cell passes through another 6-in. butterfly valve located inside the cell and thence into a common exhaust header (8 to 16 in. o.d., 16-gage welded steel construction) located along the ceiling of the experimenters' utility tunnel. The head end of the exhaust header contains a 8-in. manually operated butterfly valve opening to the experimenters' utility tunnel. The purpose of this valve is to provide adequate dilution air in the header, particularly for the cell offgas system (see sec. 5.14). Inside the experimenters' cell a shield wall isolates certain highly radioactive loop components. Provision has been made to position either the intake or exhaust duct on each side of this shield wall so that it will not act as a barrier to the ventilating air flow.

Before reaching the EGCR stack the ventilation system air flow passes through one of two parallel lines, each containing an AEC absolute filter (99.95% efficiency at 0.3 μ) and an induced draft fan which discharges to the stack. One fan is operating while the other is held in standby. Each exhaust filter has a differential-pressure-indicating switch that senses the pressure differential across the filter. If this pressure differential increases a specified amount, the indicator switch stops the

---

[16]Memorandum from O. H. Klepper to W. B. Cottrell, "EGCR Loop Hazards," September 21, 1960.

operating fan motor and starts the standby fan motor. Each fan and filter combination has a pair of isolation valves. These valves are automatically closed and opened as required by the fan and filter combination that is operating.

During loop operation, when the experimenters' cells must be sealed, the pressure inside the cell may slowly build up as a result of loop gas leakage or other gas leakage. This pressurization reduces the effective cell containment volume available to take care of a loop rupture and thus increases the chances of the cell rupture disk bursting and contaminating the entire reactor containment vessel during a loop depressurization accident. In order to minimize this hazard, a 1-in. vent line has been provided that bypasses the cell exhaust valve. This vent line prevents excessive pressure from building up inside the experimenters' cell as long as the radiation level of the gas creating the overpressure is within the limits set by the total allowable radioactive effluent from the EGCR stack. The vent line contains two remotely operated valves in series to seal off the cell in case the activity exceeds the allowable limit. The valves are spring loaded to fail closed.

The series vent valves bypassing the exhaust valve can be closed by either one of two radiation monitors. The monitor located in the bypass line closes the vent valves and sounds an alarm at the experimenters' control panel if the activity level of the gas passing through the bypass line is above a predetermined limit. The monitor located in the exhaust header ahead of the filters closes the vent valves to all experimenters' cells and sounds an alarm in the experimenters' control room if the activity of the exhaust gas is above a predetermined limit. This monitor acts as a backup for the individual cell exhaust monitors.

Closure of the vent valves on the exhaust valve bypass line activates a number of interlocks and circuits for additional protection of the experimenters' cell against accidental overpressurization. All gas supply lines, including the sample system purge gas and the gas distribution system, contain automatic control valves which are interlocked with the cell vent valves and close when either vent valve closes.

A 2-in. bypass line is provided around the cell ventilation inlet valve to provide vacuum relief for the experimenters' cell during loop operation. This line contains two check valves (similar to Grove Chexflo valves) in series. These valves permit a slight vacuum inside the cell but provide adequate relief to prevent collapsing of the cell liner if a low pressure should develop inside the cell due to a malfunction of the loop offgas system (see sec. 5.14).

6.7.3. Operation

The cell ventilation system is turned on by manually opening two 6-in. butterfly valves in the experimenters' cell. These valves are interlocked to prevent opening of either valve if secondary containment

of the experimental loop is necessary. Also, the valves are interlocked to prevent opening of the cell ventilation inlet valve until the exhaust valve is fully open. The system will provide adequate ventilation for personnel working inside the cell.

6.7.4. Hazards

The principal hazard associated with the ventilation system is the possibility of explosive mixtures accumulating inside the experimenters' cell. A considerable effort will be made during final design to use materials inside the cell which have a low susceptibility to volatilization and are incapable of forming flammable vapors. If nonflammable materials cannot be obtained to effectively eliminate this hazard, flammable vapor detectors will be located inside the experimenters' cells to detect the formation of explosive mixtures. In addition, the operation of those loop components that are most likely to become a source of flammable vapors will be adequately instrumented to insure that the operator is aware of abnormal operating conditions that might lead to formation of these vapors.

6.7.5. Project References

Design Criteria (CF 61-6-3)	
Criteria for the Cell Ventilation System	Code C.2.0
Preliminary Design Drawings (CF 61-6-2)	
Process Flowsheet, Cell Services	D-RD-10373
Instrument Diagram, Cell Services	Q-2120-11

6.8. Cell Washdown

There is no permanent installation for remotely washing down the interior of the experimenters' cells, but a portable spray unit is provided for this purpose. This unit, similar to the rotor-jet spray and pump manufactured by the Sellers Injector Corporation, mixes cold water and steam to obtain a high-velocity hot-liquid jet. The jet provides hot water at temperatures ranging from 175 to 205°F at pressures of 100 to 630 psi and should prove very effective in decontaminating the cell interior. Detergents and other solvents may be added to the spray, as required.

The jet pump of the spray unit is installed in the crane-bay area. The unit employs river water, and a 90-lb steam supply is provided to heat the water. In order to decontaminate a cell, the sprayer will be installed through an access port in the ceiling of the cell. This unit

will be connected to the jet pump by means of a flexible hose and will provide complete cell washdown by spinning two jets about a horizontal axis while at the same time turning them about a vertical axis.

Once the cell has been washed down by the remotely operated sprayer and the resultant radioactive solution has drained through the cell floor drain (see sec. 6.6), decontamination will be completed by entering the cell (when radiation levels permit) and manually washing down those areas or equipment not accessible to the sprayer. A long-handled hand nozzle will be furnished with the hose from the jet pump for use in the manual decontamination of the cell.

Particulate radioactive contamination resulting from minor leaks from the experimental loop will be removed manually by entering the cell and washing down the interior after first purging the cell with the cell ventilation system to remove the gaseous contamination. In the event of a major loop gas leak into the cell, the resulting radiation levels may prohibit personnel access to the cell interior. The cell decontamination will then be accomplished by reducing the cell pressure to atmospheric pressure by cleaning up the cell gas and discharging it to the stack through the loop offgas system (see sec. 5.14). The cell atmosphere will then be purged, taking precautions not to exhaust excessive activity up the stack, and the ventilation intake valve will be closed. The resulting negative pressure inside the cell will permit the removal of the concrete shield plug and flange plate in the access port without spreading the contamination. After the portable rotor-jet spray unit has been installed, the outlet ventilation valve will be closed and the cell drain valve opened. Cell washdown will proceed then until the activity level permits personnel access to the cell to complete the decontamination process.

The radioactive effluent resulting from a cell washdown will drain from the cell through the cell floor drain to the 2000-gal experimenter and auxiliary sump tank, F-14. The waste will then be pumped to a valve box from which it will be directed either to the river via a holdup basin or to the 8000-gal hot-waste-storage tank, depending on the specific activity of the solution.

Project References

Design Criteria (CF 61-6-3)	
Criteria for the Cell Washdown System	Code C.12.0
Preliminary Design Drawings (CF 61-6-2)	
Process Flowsheet, Cell Services	D-RD-10373
Instrument Diagram, Cell Services	Q-2120-11

6.9. Cell Penetrations

Most of the penetrations into a typical experimenters' cell are made through the cell wall facing the experimenters' utility tunnel. The penetrations through this wall include electrical supply leads, instrumentation lines, cell cooling-water lines, ventilation ducts, a buffer gas supply line, a loop fill supply line, the supply line to the gas storage tanks, the loop offgas line, the sample station tube, and the sample station purge gas line. The cell ventilation ducts enter and leave the cell wall near the cell roof through two 16-in. penetrations. One penetration is provided at each end of the cell to accommodate the inlet and outlet ventilation ducts. Most of the electrical and instrumentation leads are fed into the cell via four 24-in. penetrations located about midway up the cell wall and at one end of the cell. Two 16-in. penetrations near the base of the cell accommodate the cell cooling-water lines and other lines. A separate penetration may be made to house the gas-sampling station (see sec. 5.4).

The remaining penetrations to the experimenters' cell are made through the ceiling, floor, and reactor containment side of the cell. The ceiling penetrations include the loop decontamination lines and the personnel airlock hatchway. The single floor penetration is a 4-in. floor drain. The penetrations through the cell wall adjacent to the containment vessel include the mainstream loop piping, the demineralized-cooling-water lines, the sniffer gas piping, and the cell containment relief pipe containing the cell rupture disk. The mainstream loop piping, the demineralized-water lines, and an extension of the sniffer gas piping enter the cell via a 42-in. penetration pipe mounted between the reactor containment vessel and the experimenters' cell liner. Immediately below the penetration for the mainstream loop piping, another penetration, consisting of a 36-in.-diam pipe, is made to provide pressure relief for the cell by exhausting cell gas to the reactor containment vessel through a rupture disk. The rupture disk is mounted at the end of the penetration inside the reactor containment vessel. Both penetration pipes between the reactor containment vessel and the cell liner contain low-pressure expansion bellows to accommodate any differential expansion between the containment vessel and the cell wall.

All penetrations of the experimenters' cell must satisfy two basic criteria. First, they must be in accord with the basic containment philosophy for the experimental facility (see sec. 6.1). Thus, each cell penetration must be designed to safely contain a cell pressure of 12 psig at 150°F with negligible leakage, and all gas supply lines must contain two check valves in series immediately inside the cell liner to prevent gas flow from the experimenters' cell if these lines are broken outside the cell. Secondly, the penetrations must be adequately shielded to prevent excessive radiation

from streaming through the penetrations. Each penetration through the ceiling and wall into the experimenters' utility tunnel and crane bay requires a minimum shield thickness equivalent to 3 ft of ordinary concrete (7.6 in. of lead) for direct radiation from the loop piping. These shields may be located either within or external to the cell. Shadow shields may also be employed. In most cases, the details of these penetrations and the shield requirements remain to be developed as a part of the detailed (Title II) design work.

Design Criteria (CF 61-6-3)

Criteria for Cell Penetrations	Code B.17.0
Criteria for the Cell Floor Drain	Code B.14.0

6.10. Cell Pressure Relief

During normal loop operation the experimenters' cells will be vented through the cell ventilation system outlet bypass line (see sec. 6.7). This venting protects the cell from pressurization during normal operation and a resulting possible overpressurization following a major loop gas release to the cell. If the cell were not allowed to breathe during loop operation, the cell pressure could increase appreciably over a long period of operation (because of a small gas leak, for instance), and a subsequent failure of the loop piping could conceivably overpressurize the cell. Each experimenters' cell breathes via a 1-in. line that bypasses the cell ventilation exhaust valve. This line contains two pneumatically operated valves that isolate the cell if there is excessive airborne radioactivity in the cell atmosphere.

The experimenters' cell structure, with its liner, is designed to withstand an internal pressure of 12 psig, which is well in excess of the pressure created by a release of the entire mass of loop gas under the most severe operating conditions. However, the cell pressure following a compound loop failure which releases reactor gas to the cell will exceed 12 psig. In order to protect the experimenters' cell against overpressurization, a pressure-relief device is installed between the experimenters' cell and the reactor containment vessel to relieve the cell overpressure to the containment vessel at a cell pressure of 10 to 12 psig. The pressure-relief device chosen for this application is a rupture disk. This disk is sized for a flow rate of 35 000 cfs at a cell pressure of 12 psig. It is reinforced by a backup grating on the experimenters' cell side to prevent disk rupture by an excessive pressure in the reactor containment vessel.

The cell rupture disk was designed by Black, Sivalls & Bryson, Inc., and fabricated by Pittsburgh-Des Moines Steel Company. It was designed to meet ASME code requirements and is marked per paragraph

UG-129 of the ASME code. The rupture disk has a free-flow diameter of 32 in. and an over-all diameter of 37 in. The honeycomb backup grating is 1 1/2 in. thick and has rectangular holes 2 in. across by 1 3/16 in. high. The cell rupture disk is mounted on a nozzle penetrating the experimenters' cell liner and the reactor containment vessel. The center line of the nozzle is approximately 3 1/2 ft above the cell floor. The rupture disk is mounted in the reactor containment vessel end of the nozzle to reduce the probability of an in-cell generated missile penetrating the rupture disk.

6.11. Cell Temperature and Humidity Control

6.11.1. Temperature Control

The experimenters' cell air temperature must be maintained within certain limits to insure proper operation of the experimental loops. The maximum cell temperature is limited by the electrical and electronic equipment in the cell. The life and operation of this equipment would be seriously impaired if the cell temperature exceeded 120°F even for relatively short periods of time. The minimum temperature is set by operation of the loop with CO_2, since the cell temperature must be maintained above 88°F to prevent condensation of high-pressure CO_2 in the gas supply and buffer gas lines in the experimenters' cell.

A considerable amount of heat is liberated in the experimenters' cell. The principal heat sources are the heat losses from the transfer pump, the in-cell piping, the high-current buses, and the heater transformer. Other contributions include heat losses from the loop gas filter and loop compressors, the electrical instrumentation, the vacuum pump, and the cell cooler blower motors. An estimate of the heat power released to the experimenters' cell atmosphere from the different loop components and equipment is given in Table 6.11.1.

The experimenters' cell cooling system is designed to remove 100 kw of heat from the cell at an average cell temperature of 110°F, even though the estimated maximum heat load is 88.1 kw and it appears unlikely that it will be imposed on the cell cooling system for any extended period. The heat removed by the cell cooling system is transferred to river water that enters the cooling system at an average flow rate of 40 gpm and a maximum inlet temperature of 71°F.

The experimenters' cell cooling system includes two 50-kw air-to-water forced-convection heat exchangers, each of which is connected to an independent blower power supply. In order to assure continuity of operation, the coolers are arranged and sized so that either unit will provide cooling throughout the cell if the other unit should fail. It is anticipated that the experimenters' cell will contain a shield wall around some of the highly radioactive components. The intakes for the

Table 6.11.1. Heat Sources Inside the Experimenters' Cell

Heat Source	Heat Contribution (kw)
Heater transformer and high-current buses	35.0
Mainstream piping (assuming 950°F operating temperature and 3 in. of Thermoflex insulation)	27.1
Transfer pump	16.8
Mainstream filter and loop compressors	3.5
Electrical instrumentation	2.0
Vacuum pump	2.2
Cell-cooler blower motors	1.5
Total	88.1

two cell coolers are located on opposite sides of this proposed wall. The cooled air exhausts to the side of the experimenters' cell opposite the intake, thereby minimizing the shield walls' obstruction of air circulation inside the cell. One of the cell cooler intakes is mounted directly over the heater transformer. Air rising from the transformer is considerably above the average cell air temperature and thus improves the efficiency of the cell cooler.

When an experimental loop is operating with CO_2, the experimenters' cell air temperature must be maintained above 88°F to prevent condensation of high-pressure CO_2 in the gas lines inside the cell. In order to accomplish this, the service water line feeding each cell cooler contains a flow control valve which is designed to maintain the cell air temperature at 95°F by throttling the cooling water flow. If the experimenters' cell air temperature drops to 92°F, an electrical heating element in one of the two cell coolers is energized until the cell air temperature is increased to 95°F. If the air temperature should continue to drop, a heating element in the other cell cooler is energized when the cell air temperature reaches 90°F. Each cell cooler contains a 7-kw heating element.

When the experimental loop is operating with helium, the temperature control valves on the cooling water feed lines are bypassed and the electrical heating units are disconnected. This permits the coolers to operate at full cooling capacity at all times. All valves and control instrumentation for the cell coolers, except the temperature sensors,

are located in the experimenters' utility tunnel where they are accessible for testing and maintenance.

The experimenters' cell air temperature on each side of the shield wall is monitored and indicated on the experimenters' control panel. High-low temperature audio and visual alarms are provided and set at cell air temperatures of 110°F and 90°F, respectively. The low-level alarm is used only for operation with CO_2.

The cell-cooler blower motors are totally enclosed units and are capable of operation in CO_2 or helium atmospheres at pressures up to 26 psia. A sail switch on the cooler exhaust is used to detect failure of the cooler blower by indicating a loss of air flow through the cooler. This loss of air flow actuates audio and visual alarms at the experimenters' control board.

Automatic cell overtemperature protection is provided if the cell air temperature exceeds 110°F. At 115°F a control system shuts off electrical power to the heater transformer and the vacuum pump as long as the reactor is at power. Operation of the vacuum pump is permitted if the reactor is shut down. Interrupting power to these two units reduces the cell heat load from 88.1 to 50.9 kw. This should correct the overtemperature condition, even if one cooler is inoperative. If the experimenters' cell temperature should reach 120°F, the transfer pump is automatically shut off. The reactor is manually shut down if the cell air temperature reaches 130°F.

6.11.2. Humidity Control

Since it is doubtful that the cell coolers will have sufficient dehumidifying capacity, a small, portable, refrigeration-type dehumidifier draining to the cell drain will be mounted in each experimenters' cell to control the humidity. This humidity control is particularly important for protecting the radiation-detection equipment. Humidity in the experimenters' cell will be continuously monitored during loop operation. An indication of high humidity in the cell will actuate audio and visual alarms at the experimenters' control board. The loop operator will then turn on the dehumidifier to reduce the water vapor to acceptable levels.

6.11.3. Project References

Design Criteria (CF 61-6-3)

Criteria for Cell Temperature Control	Code B.13.0

Preliminary Design Drawings (CF 61-6-2)

Process Flowsheet, Cell Cooling Water System and Cell Cooler	D-RD-10115

Instrument Diagram, Cell Temperature Control System Q-2120-9

6.12. Flow Restrictor

One accident envisioned for the EGCR loops is a double-ended rupture of the reactor through-tube resulting from a rapid loop depressurization following a double-ended rupture of the in-cell mainstream loop piping. A double-ended rupture is a complete severance of the pipe or tube followed by sufficient movement of the severed ends to permit free flow into or out of the ends. This is a somewhat hypothetical case and not considered credible in the case of the EGCR loops but worthy of study because it is clearly an upper boundary condition for this type of failure. As a result of this accident, the experimenters' cell would rapidly fill with reactor gas via the two failed portions of loop piping. When the cell pressure reached 10 to 12 psig, the cell rupture disk would burst and release the cell gas to the reactor containment vessel. Subsequently, the cell pressure would depend upon the rate at which reactor gas entered and left the experimenters' cell. If gas entered the cell faster than it could leave, a dangerous overpressure of the cell would occur that might lead to a possible rupture of the cell containment.

To remedy this problem it is necessary to have or to introduce sufficient flow restriction in the loop piping to limit the flow of reactor gas into the cell. The calculations summarized below indicate that the loop piping leading to the top and bottom nozzles of the reactor pressure vessel should contain flow restrictions sufficient to prevent the reactor gas from entering the experimenters' cell at a rate greater than that which the cell rupture disk can relieve without exceeding the cell design pressure.

The flow of gas from the reactor to the cell is limited to sonic flow because the ratio of cell pressure (12 psig max) to reactor pressure (300 psia) is much less than the critical pressure ratio (0.486 for helium). Therefore, the rate of gas flow into the cell was calculated as that flow which would give sonic velocity through the flow restricting pipes leading to the top and bottom nozzles. For the top nozzle the restriction is a section of 5-in.-o.d., 0.375-in.-wall tubing. For the bottom nozzle the restriction is a section of 4-in. sched.-80 pipe. If the reactor gas is at 1050°F and 300 psia, the sonic (maximum flow of helium through these restrictions is 74.0 lb/sec.

The maximum cell pressure required to transfer this flow of 74.0 lb of helium per second from the cell to the reactor containment vessel was calculated to be 11.4 psig. The pressure was the calculated pressure drop through the cell rupture-disk device. The rupture disk was considered as a duct 32 in. i.d. and 6 1/2 ft long with both the entrance and exits of the duct extending into the experimenters' cell and the reactor containment vessel, respectively.

The flow of 1050°F helium which this duct can pass was also calculated for a cell pressure of 12 psig, the maximum allowable cell pressure. The entrance to the rupture-disk duct was assumed to be an inward-projecting pipe. The exit was assumed to have a loss coefficient of one. The calculated friction losses along the duct were negligibly small. The resulting flow rate was 76.9 lb/sec.

On the basis of the above calculations, it is apparent that the experimenters' cell design pressure of 12 psig would not be exceeded by the assumed double-ended failures. The calculations are somewhat conservative because certain temperature and pressure drop effects have been neglected. The gas flow rate into and out of the cell is proportional to the inverse square root of the gas absolute temperature. Thus, at lower gas temperatures the flow rates are higher. As the reactor gas flowed from the reactor, through the broken piping and into the cell, it would be cooled. This temperature reduction would permit gas flow out of the cell at higher than the calculated rate. Because of the large pressure drops in the loop piping as a result of the large flow of gas through the piping, sonic velocity would occur at the broken ends of the in-cell piping. Consequently, the pressures at which sonic velocity occurred would be less than the 300-psia reactor pressure. The resulting reactor gas mass flow into the cell would be decreased by the lower gas density.

Project References

Design Analyses (CF 61-6-4)

Mass Flow Restriction Required in the EGCR Experimental Loop System (plus Addendum).

6.13. Cell Pressure and Leak Tests

The experimenters' cells are lined with 10-gage carbon steel sheet (ASTM-A 246), which serves as a gas-tight secondary containment for the primary containment piping and components in the cell. The cell structure with this liner is designed to withstand an internal pressure of 12 psig at a maximum temperature of 150°F. In order to assure that the experimenters' cells are capable of containing this pressure and remaining gas tight, a number of pressure and leak tests will be performed.

Prior to leak testing the cell as a unit, the cell liner will be tested for weld integrity. This test will be performed by injecting a tracer gas at a slightly positive pressure into the small void between the cell liner and the concrete support structure. The tracer gas will be injected through a single tube in the concrete wall of each cell. The welds will be checked by tracer gas detectors from inside the cell. All welds found to leak will be repaired by rewelding. The cell liner on the underside of the removable roof shield plugs will be

tested after the plugs are in place by injecting tracer gas into each cell through a tap hole and then probing the area around the roof hatch seal welds.

After the weld integrity tests have been completed, the experimenters' cells will be pressure tested before the cell leak rate tests are performed. All the cell penetrations and the rupture disks will be blanked off. One cell will be pressurized for 1 hr at 12 psig while being heated to 150°F. Following this test all the experimenters' cells will be pressurized to 15 psig for a period of 1 hr at ambient temperature.

After satisfactory completion of the pressure test, each cell will be tested for total air leakage. With all penetrations and the rupture disk still blanked off, each cell will be pressurized to 12 psig and the cell leak rate will be determined by the rate of depressurization method. For test acceptance, the total rate must be 0.5 wt % or less of the contained air at 12 psig over a 24-hr period. The leak rate tests will be performed using a system of sealed and leak tested drums of such numbers and positions that the temperature balance effected will accurately reflect the mean cell temperature. The reference drums will be interconnected to secure a uniform pressure in the drums. The cell air will be continuously circulated around the cell during the tests. The effect of vapor pressure will be minimized by pressurizing the drums in the experimenters' cells at nearly the same time. The drums will then be sealed off and the differential pressure between the drums in the cell will be read on a water manometer located in the experimenters' utility tunnel.

The blanking-off fixtures will be retained for additional leak testing of the experimenters' cells, as required. Blanking off fixtures and blind flanges will be prepared for only one cell, since they can be moved from cell to cell during the leak rate tests. After the cell liner tests have been satisfactorily completed, the blanking-off fixtures will be replaced with the cell penetrations required for loop installation. After all the final penetrations have been completed, the cell will be repressurized to 12 psig with the rupture disk blanked off. For test acceptance, the total cell leak rate must be 1 wt % or less of the contained air at 12 psig over a 24-hr period. If the total leak rate exceeds the allowable percentage, the cell will be depressurized and all welds will be rechecked for leaktightness. This procedure will be repeated until an acceptable leak rate is obtained. Also, this final cell leak test will be repeated at convenient intervals during loop operation and each time major maintenance is performed in the cell to assure continuing integrity of the cell containment.

6.14. Missile Protection

6.14.1. General

An experimenters' cell houses most of the experimental loop equipment. It is lined with a vapor-tight steel liner to provide secondary containment of any loop gas released to the cell. Not only must the cell liner provide adequate secondary containment of the loop gas, but it must also be designed to remain intact following the impact of any credible missile generated in the cell.

An experimenters' cell is lined with 10-gage sheet steel (minimum thickness, 0.131 in.). It appears from preliminary calculations that this thickness is more than adequate to contain any gas-propelled missiles that might be generated. There are two kinds of missiles that must be considered in evaluating the missile hazard. First, there are those missiles that might be created from the failure of high-speed rotating equipment in the cell (e.g., the loop compressors). The second type of missile is one that is accelerated by the expansion of loop gas following its creation. This section is concerned only with the hazard associated with those missiles that are gas propelled. It does not evaluate the credibility or hazards associated with those missiles that may result from the failure of high-speed rotating equipment (see sec. 4.9).

In evaluating the hazards associated with gas-propelled missiles, two different types of missiles must be evaluated. The first class of missiles are those that are accelerated by a jet of gas rushing against them. The second class includes those missiles that are accelerated by the exhausting of gas stored inside the missile (self-propelled missiles). In evaluating the penetration capability of gas-propelled missiles, a number of conservative assumptions must be made to facilitate a solution of the resulting differential equations. A thorough analysis of the missile-penetration problem, along with the simplifying assumptions and solutions, is presented in a design analysis (see sec. 6.14.4). A brief summary of the assumptions and results is presented here.

The following equation[17] is used for determining the penetration of a missile in steel:

$$t^{3/2} = \frac{KE}{K_x^2(17,400)gd^{3/2}} ,$$

where

t = wall thickness required to contain a missile, in.,

KE = kinetic energy of the missile, $ft^2 \cdot lb/sec^2$,

[17]APPR-1 Hazards Summary Report, APAE-2, July 27, 1955.

K_x = a constant, depending upon the grade of steel (= 1),
d = diameter of missile, in.,
g = acceleration of gravity, ft/sec^2.

In order to evaluate whether the cell liner is adequate to contain any credible missile, the maximum kinetic energy of the various missiles must be determined.

6.14.2. Jet Propelled Missiles

In evaluating the kinetic energy of missiles propelled by a jet of loop gas, the following assumptions were made:

1. The loop gas is a perfect gas (obeys the perfect gas laws).

2. The state of the gas inside the loop piping is a stagnation condition and does not change during the acceleration period. (A conservative assumption; valid only for small jets.)

3. A pipe rupture has the same area as the face of the missile originally attached at that point.

4. The velocity at the centerline of the jet (v_j) is constant over all distances and, by assumption 2, all times and is equal to the sonic velocity (a conservative assumption).

5. Gas escaping from a rupture follows the equations of isentropic flow.

6. The velocity of the missile is negligible compared with the velocity of the jet.

7. An impinging jet of gas is deflected 90 deg in a coordinate system in which the velocity of the missile is zero.

8. The gas jet expands at an angle of 60 deg. This means that the mass flow impinging upon the missile (w in lb/sec) may be approximated by

$$w = \frac{w_j r^2}{(r + x \sin 30°)^2} = \frac{w_j r^2}{(r + 0.5\ x)^2} ,$$

where
w_j = mass flow through orifice, lb/sec,
r = radius of missile, ft,
x = distance from pipe, ft.

Assumption 8 was made as a result of research done with a shock tube and air.[18] This work indicated that the advancing front of air suddenly released from a shock tube expanded at an angle of 60 to 70 deg in going from the orifice pressure down to atmospheric pressure.

Using these assumptions, the force (F in lb) acting on the missile by the jet is

$$F = \frac{w_j r^2 v_j}{(r + 0.5\ x)^2} \quad .$$

Since the force is equal to the mass of the missile (M_m in lb) times acceleration of the missile ($d^2x/d\theta^2$), the following differential equation is obtained:

$$\frac{d^2x}{d\theta^2} = \frac{w_j r^2 v_j}{M_m (r + 0.5\ x)^2} \quad .$$

In order to obtain the velocity of the missile, the above equation is integrated once, and proper boundary conditions are applied. The terminal missile velocity, $dx/d\theta$ (at infinite x), is found to be

$$\left(\frac{dx}{d\theta}\right)^2 = \frac{\pi d^3 k g p_0}{24 R_p M_m} \quad ,$$

where

k = ratio of specific heats of the gas,
p_0 = original loop pressure, psia,
g = acceleration of gravity, ft/sec^2,
$R_p = \left(\frac{k + 1}{2}\right)^{k/(k-1)}$.

From the above equation, the kinetic energy is

$$KE = \frac{d^3 k g p_0}{15.29 R_p} \quad .$$

---

[18]U. S. Department of Defense, Ballistics Research Laboratory, Paper No. 843, AFSWP No. 768.

Substituting this in the penetration equation yields

$$t^{3/2} = \frac{d^{3/2}kp_0}{266{,}000R_p} .$$

For a helium loop, this reduces to

$$t^{3/2} = \frac{d^{3/2}p_0}{328{,}000} .$$

For a CO_2 loop, it reduces to

$$t^{3/2} = \frac{d^{3/2}p_0}{375{,}000} .$$

It is noted from the above formulas that the maximum thickness is required for a missile accelerated by a helium jet and is a function of the diameter of the missile and the loop pressure. Assuming a missile having a cross-section equal to that of a 6-in. pipe, the wall thickness required to contain the missile for 1000-psia helium operation is found to be 0.119 in. Since this is less than the minimum wall thickness of 0.131 in., it appears that the cell liner is adequate to contain any credible jet-propelled missile. It should be pointed out that the choice of a missile composed of a piece of 6-in. pipe is a very conservative choice, since several of the assumptions are completely invalid for a 6-in. opening. Considering the assumptions made for this analysis, the maximum missile diameter should probably be limited to 2 in. or less.

6.14.3. Self-Propelled Missiles

In evaluating the kinetic energy of missiles propelled by the exhausting of loop gas contained within the missile, the first analysis was made by assuming that all of the internal energy of the contained gas was converted into missile kinetic energy. The resulting kinetic energy from this simplified model was high enough to cause penetration of the present liner. A more realistic comprehensive analysis was required. The model that was finally employed utilized the following simplifying assumptions:

1. The loop gas is a perfect gas (obeys the perfect gas laws).

2. The state of the gas inside the missile is a stagnation condition.

3. The area of the jet is the same as the impact area of the missile.

4. Sonic velocity exists at the exit of the missile and this exit is a perfect nozzle.

5. Gas escaping from the missile obeys the equation of isentropic flow.

6. The temperature of the gas in the missile remains constant (a conservative assumption).

7. The atmospheric pressure in the cell is negligible (a conservative assumption).

Applying the above assumptions, the thrust of the missile (τ, lb) is found to be

$$\tau = \frac{\pi d^2 p_0 (1 + k) e^{-C\theta}}{4R_p} = \frac{M_m}{g} \frac{d^2x}{d\theta^2} ,$$

where all the terms but C have been defined previously;

$$C = \frac{\pi d^2 p_0}{4M_0} \left(\frac{kg}{RT_0 R_p R_d} \right)^{1/2} ,$$

M_0 = original mass of gas in missile, lb,
R = gas constant, ft/°F,
T_0 = gas temperature, °R,

$$R_d = \left(\frac{k + 1}{2} \right)^{1/(k-1)} .$$

In order to obtain the missile velocity as a function of time (θ in sec), the thrust equation was integrated once, and the boundary conditions were applied. The terminal missile velocity, $dx/d\theta$, occurring at infinite θ was found to be

$$\frac{dx}{d\theta} = \frac{\pi d^2 p_0 L}{4M_m} \left[\frac{2g(k + 1)}{RT_0 k} \right]^{1/2} ,$$

where

L = length of missile, ft .

Using the above term for the maximum velocity of the missile, the missile kinetic energy becomes

$$KE = \frac{p_0^2 d^2 Lg(k+1)}{1.62\ kRT_0B} ,$$

where

$$B = \text{density term for the pipe, lb/ft-in.}^2 .$$

Substituting the above expression into the penetration formula, the required wall thickness becomes

$$t^{3/2} = \frac{d^{1/2} p_0^2 L(k+1)}{28{,}200\ kRT_0B} .$$

For a helium loop, the above equation reduces to

$$t^{3/2} = \frac{p_0^2 d^{1/2} L}{6{,}800{,}000\ T_0B} .$$

For a CO_2 loop, the penetration equation reduces to

$$t^{3/2} = \frac{p_0^2 d^{1/2} L}{555{,}000\ T_0B} .$$

Assuming a gas temperature of 600°F and a missile composed of a 10-ft section of 6-in. sched.-80 pipe, the required wall thickness for 1000-psia helium loop operation is 0.024 in., while that required for 1000-psia CO_2 loop operation is 0.126 in. Since the minimum wall thickness is 0.131 in., it appears that the wall will contain all credible self-propelled missiles. It is felt that the choice of a 10-ft-long missile is quite conservative, that is, any credible missile will probably be considerably shorter.

6.14.4. Project References

Design Analyses (CF 61-6-4)

Missile Penetration

6.15. Cell Access — Personnel and Machinery

6.15.1. General Description

Personnel access to the eight experimenters' cells is required to perform direct maintenance and inspection of equipment located in these cells. Sufficient shielding is provided between each gas-tight cell to permit entry into a cell adjacent to an operating loop (see sec. 3.5). Major maintenance operations can be performed only when the particular loop in question is not in operation and cell containment is not required (see sec. 6.1). Access to the cell during this time is by way of the cell roof hatch openings shown in Fig. 6.15.1.

During loop operation or when cell containment is required, access to the experimenters' cells for minor repairs, maintenance, or inspection is provided by a portable personnel air lock. A hatchway, including a cover plate, shield plug, and a bottom closure is built into the roof of each cell, as shown in Fig. 6.15.2. The portable air lock can be attached to any of the eight hatchways after removing the hatchway cover plate and shield plug. After attaching the air lock, continuity of cell containment is provided by interlocking the hatchway bottom closure and the portable air lock door so that one cannot be opened unless the other is closed.

The hatchway sleeve penetrates the cell roof and the cell liner. The cell liner, which acts as secondary containment for equipment located in the cells, is welded to this sleeve. Gasket seals at the hatchway cover plate and bottom closure will maintain cell containment during normal operation.

6.15.2. Design

The portable air lock and hatchway are designed for an operating temperature of 100°F and a maximum pressure of 12 psig. The air lock is capable of housing two men. The air lock and hatchway doors are operable from both sides and open against cell pressure (to minimize the sealing problem). A hoist is provided in the air lock for handling small components, such as a valve, and tools. Provision is also made for interlocks, normal and emergency power and lighting, venting, decontamination, communication systems, and emergency indicators.

6.15.3. Installation and Operation

Instrumentation capable of continuous indication of the radiation level within the cell during maintenance operations is provided that is separate from and an adjunct to the radiation alarm system. A visual check of the instrumentation will indicate whether the cell can be entered for maintenance. If the radiation level is satisfactory

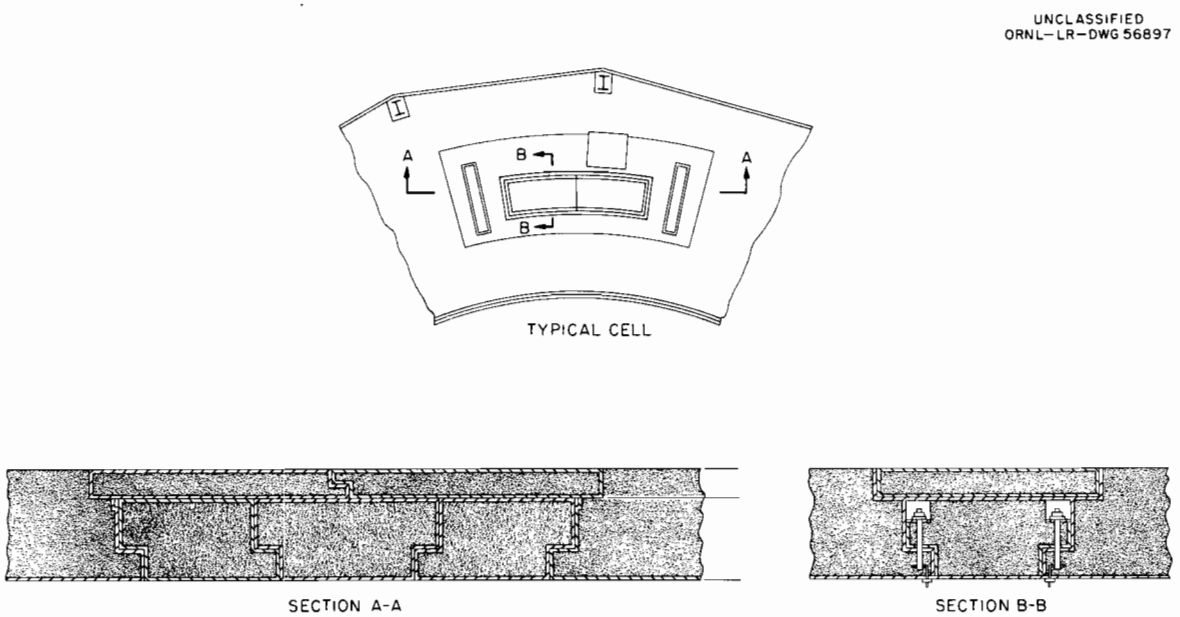

Fig. 6.15.1. Cell Roof Hatch Opening.

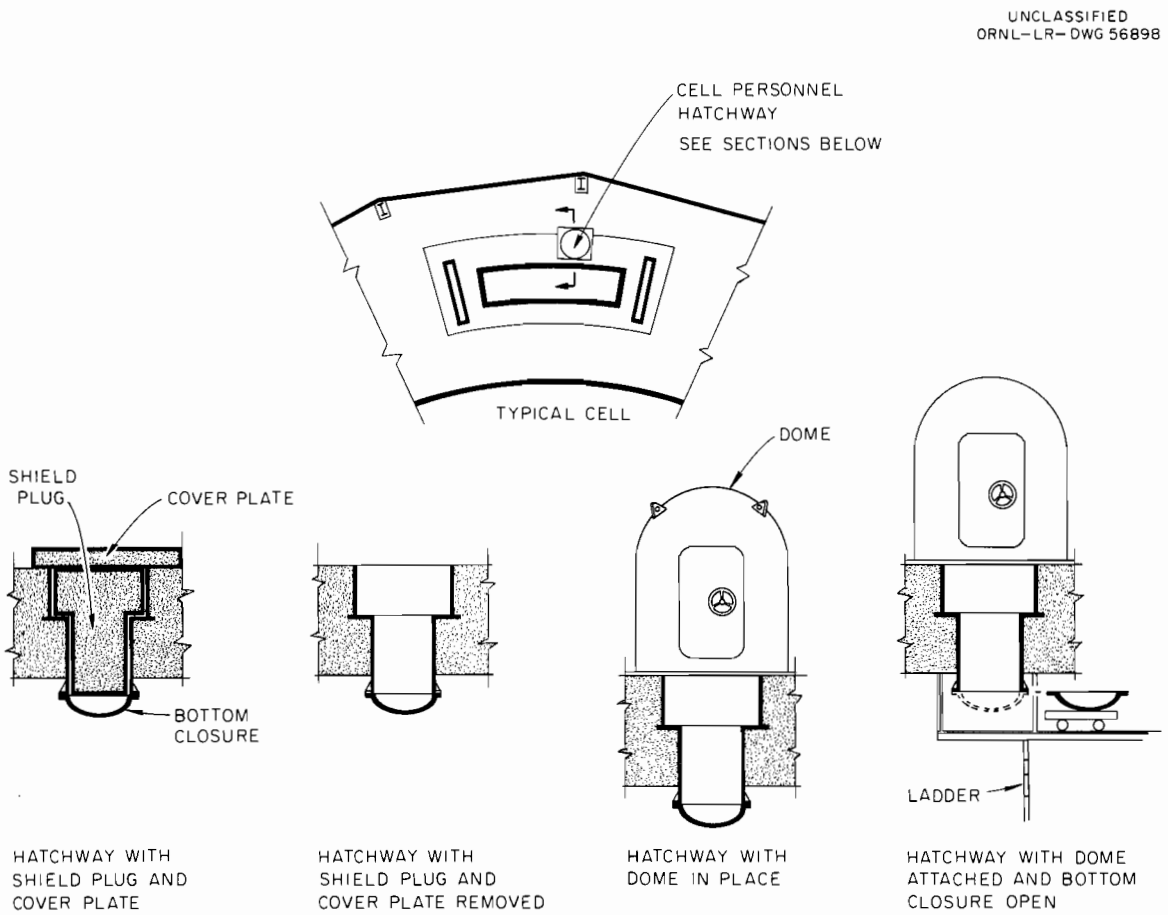

Fig. 6.15.2. Portable Air Lock and Hatchway.

for entry, the bridge crane will be used to remove the cell hatchway cover plate and then the concrete shield plug. The bridge crane will then be used to set the air lock over the cell hatchway and align it. The air lock flange will then be bolted to the upper flange of the cell hatchway.

A Freon supply line will be attached to an external connection on the air lock shell, and the air lock will be pressurized with Freon to 2 psig to permit an external check with a portable gas-detection instrument of the seals at the flange and the door. Following this check, the Freon supply line will be disconnected and the air lock will be depressurized by opening the pressure test valve on the exterior of the air lock in the line used for pressurizing with Freon. When depressurization has been completed, the pressure test valve will be closed and three portable cords will be connected between the air lock and wall junction receptacles for electrical power, control, and communication circuits.

For personnel entry, the air lock door will be opened and the air lock will be purged of Freon by using a portable blower. Two men will then enter the air lock, lower the floor grating, install the removable ladder support, and turn on the air lock dome light. (The terms removable and portable as used in this description of the procedures for cell entry refer to equipment that is hung on racks within the air lock or the cell when not in use.) The men in the air lock will close the air lock door, check the sound-powered telephone, the emergency alarm system, and the battery-powered portable lamp.

With the use of the removable T-bar operator, the bottom hatchway will be lowered to its side travel position. A removable hand crank will then be used to operate a gear-and-pinion drive to move the bottom hatchway horizontally to the open position. With the use of the hook on the end of the T-bar operator, the movable ladder will be raised and latched into place on the ladder support. The floor grating can then be raised and the men can descend into the cell. After checking the cell lights, the sound-powered telephone, and the emergency alarm system, they will close the bottom hatchway by using the removable T-bar operator and the removable hand crank.

When leaving the cell, the procedure will be reversed. An additional step will include a check of the integrity of the bottom hatchway double seal. A portable vacuum pump connected to the seal vacuum line through an integral-check valve will be used.

6.15.4. Safety Precautions

During performance of normal maintenance operations, maintenance personnel will be continuously present outside the air lock in case personnel within the cell wish to communicate with them. In the event an emergency situation arises within the cell, personnel in the cell

will alert the reactor control room and personnel in the crane bay area by use of the emergency signal button within the cell. In the event an emergency situation arises outside the cell, personnel in the cell will be alerted to evacuate the cell by the building emergency alarm system or by use of the emergency system button outside the air lock.

6.15.5. Interlock System

An interlock system is provided that is designed to maintain containment at all times and under any conditions. When this system is functioning, it is not possible to open the air lock door unless the bottom hatchway is properly sealed. It is similarly not possible to open the bottom hatchway unless the air lock door is properly sealed. The interlock system is designed so that, in the event of power interruption, the air lock door interlock and the bottom hatch interlock will fail in the position held prior to power interruption. In the event of mechanical failure (i.e., linkage) or of electrical failure (i.e., solenoid coil burnout) of either door interlock or bottom hatchway interlock, a condition arises which prevents the normal exit procedure from being followed.

If failure of the limit switch on the air lock door occurs (causing the bottom hatchway solenoids to become inoperative), it is necessary to check the air lock door to be sure it is closed and then disconnect the electrical power portable cord and the control circuit portable cord. These cords are then plugged into a special portable adapter box which is wired to bypass the failed limit switch and thus permit the bottom hatchway interlock release solenoid to function. If failure of the linkage, release solenoids, or bottom hatchway limit switch occurs (causing the air lock door to become inoperative), the bottom hatchway must be closed (sealed) and vacuum checked for leakage by a portable pump in the crane bay area. The air lock is then unbolted and raised (using the bridge crane) to permit the personnel to leave.

When personnel are within the cell, with the bottom hatchway closed, the air lock door will also be closed. If the air lock door were opened in this situation, it should be closed immediately. If left open inadvertently, personnel within the cell will be informed of this condition by means of the door position indicating light and will immediately notify the reactor control room or personnel outside the air lock by phone.

Interlocking is provided for automatic, continuous venting of the air lock dome to the experimenters' crane bay area while the bottom hatchway is closed. When the bottom hatchway is opened, the venting is stopped. To accomplish this a motor-operated valve is installed on the outside of the air lock dome. This motor-operated valve is actuated through a relay controlled by the interlock on the air lock hatchway. When the hatchway is in the closed (sealed) position, the valve is open. When the hatchway is open (unsealed), the valve is

closed. In the event of power failure, the motor-operated valve fails closed.

6.15.6. Communications and Alarms

Communication between personnel within the air lock and/or cell and personnel in the crane bay area will be by means of fixed sound-powered telephones (sec. 5.18). These phones are equipped with a bell-ringing device and are of the noise-cancelling type. A separate dial phone on the plant PBX system is installed within each cell to enable maintenance personnel to call any other PBX station in the EGCR. Intercom system speakers (re-entrant horn type), controlled by the master station in the reactor control room, are installed in the crane bay area and within each cell.

Emergency alarm buttons are installed in the cell, in the air lock, and on the air lock outer shell and are connected to audible alarms in the cell, in the reactor control room, and on the air lock outer shell. Operation of any button will operate all audible alarms simultaneously. Alarms which are operated by the building emergency alarm system are installed in the crane bay area and within each cell.

6.15.7. Experimenters' Cell Roof Hatches

The cell roof hatches shown in Fig. 6.15.1 are opened only when major maintenance operations are necessary. Three 2 1/2-ft-thick carbon-steel-lined ordinary concrete shield plugs are used for each cell hatchway opening, and each is bolted to the cell roof. Cell containment is maintained by using carbon steel sealing sheets welded to both the cell and hatch-plug liners. Two 9-in.-thick ordinary concrete shield plugs are placed over the three 2 1/4-ft-thick plugs to provide a total shield thickness of 3 ft. Opening the hatchway involves the removal of the 9-in. plugs, cutting the seal sheet welds around the 2 1/4-ft plugs (and their respective bolting), unbolting each plug, and then removing the 2 1/4-ft plugs with the crane.

6.15.8. Project References

Preliminary Design Drawings (CF 61-6-2)	
General Assembly	F-RD-9600
Power and Control — Wiring and Schematic Diagram	D-RD-11009
Power and Control — Electric Details	D-RD-11010
Installation and Operation Procedure	C-RD-10142
Specifications (CF 61-6-5)	
Portable Air Lock and Hatchway	JS-128-111

7. INSTRUMENTATION AND CONTROLS

7.1. Design Philosophy

The instrumentation and controls design for the EGCR experimental loops is based on the premise that the successful performance of the reactor and experimental loops shall be the primary objective of all design. The safety of both the reactor personnel and experimental facility personnel shall be the constraints under which this objective will be achieved. In no case will instrumentation be used in lieu of sound loop design for the protection of the experiment, facility, or personnel.

In order to minimize unnecessary reactor power reductions or scrams as a result of loop instrument failures, the power reduction signals from the experimental loop will originate in a coincidence-redundance type of system whereby two out of three of the signals from a given variable must indicate that an unsafe condition exists before the reactor power can be reduced by an automatic motor-driven rod insertion or a scram.

Two completely independent continuously energized power supplies will be provided for the loops and three independent power supplies will be provided for the safety circuits. Critical equipment will be duplicated, operated continuously, and connected to separate power supplies in order to minimize the possibility of damage to the experiment in the event of failure of one power supply. Independent instrumentation and controls will be provided for the two sets of critical equipment.

In order to achieve maximum flexibility for a long-term irradiation program, modular instrument board construction will be provided throughout. To avoid violation of the experimenters' cell containment, electrical instrument signal transmission will be used instead of pneumatic transmission.

The instrumentation for the loops will be suitable for use with both the carbon dioxide and helium coolants. All instrument primary elements in the main loop will be selected and installed so that they can be replaced or decontaminated. The possibility of radiation damage to instrumentation in the experimenters' cells is assumed to be negligible and therefore will not be a consideration in the selection of instruments. Power supplies and amplifiers for electrical instruments in the experimenters' cell will be located in the utility tunnel in order to facilitate maintenance during loop operation. The cost of using vapor-tight instrument housings inside the cell for instrument protection when the cell-washdown system is in operation will be weighed against the cost of nonweatherproof instrumentation and the probable frequency of use of the cell-washdown system.

A data-collecting and -computing system will be used in association with a medium-size digital computer for collecting, storing, and retrieving data from the operation of each loop. The data system will not replace the conventional instruments used in reactor safety circuits or those considered necessary for safe loop operation. The data system will supplement the critical instrumentation and replace, to a large extent, instrumentation normally used to record data.

The loop instrumentation and controls design will be such that a minimum of operator coverage will be required.

7.2. Experimenters' Control-Room Equipment

7.2.1. Floor Plan

A floor plan of the required control-room equipment for four experimental loops is shown in Fig. 7.2.1. Each loop is provided with approximately 20 instrument cabinets (24 in. wide, 40 in. deep, 78 in. high) mounted on a common 6-in. channel base which is used as a wireway. Annunciators are mounted on top of the instrument cabinets and tilted toward the operator for improved visibility. A common equipment control board houses all instruments and control hardware for the equipment and systems that are common to all loops.

Each loop is provided with a computer-operating console, a typewriter data logger, and an off-normal typewriter. These units are located in front of, and centered on, the instrument board. The computer units that are common to all loops (see sec. 7.5) are the computer proper, the centrally located main computer operating console, the input-output units, and the magnetic-tape units. This equipment is located as shown in Fig. 7.2.1.

Space is provided for a future office and for a spiral staircase between the experimenters' control room and the basement directly below.

7.2.2. Experimenter's Control Board

The 20 instrument cabinets for each experimental loop make up the experimenters' control board and are tentatively utilized as follows: 5 cabinets for radiation monitors, 2 cabinets for relays, 2 cabinets for cross-connected terminal blocks, and 11 cabinets for miscellaneous instrumentation, annunciators, and control hardware. The 11 miscellaneous cabinets will contain the following: (1) instrumentation for the main loop, gas transfer and storage system, bypass gas-cleanup system, buffer gas system, cell temperature-control system, cell services, jacking the loop compressor bearings, loop offgas system, cell ventilation system, loop cooling-water system, demineralized-water system, nozzle cooling

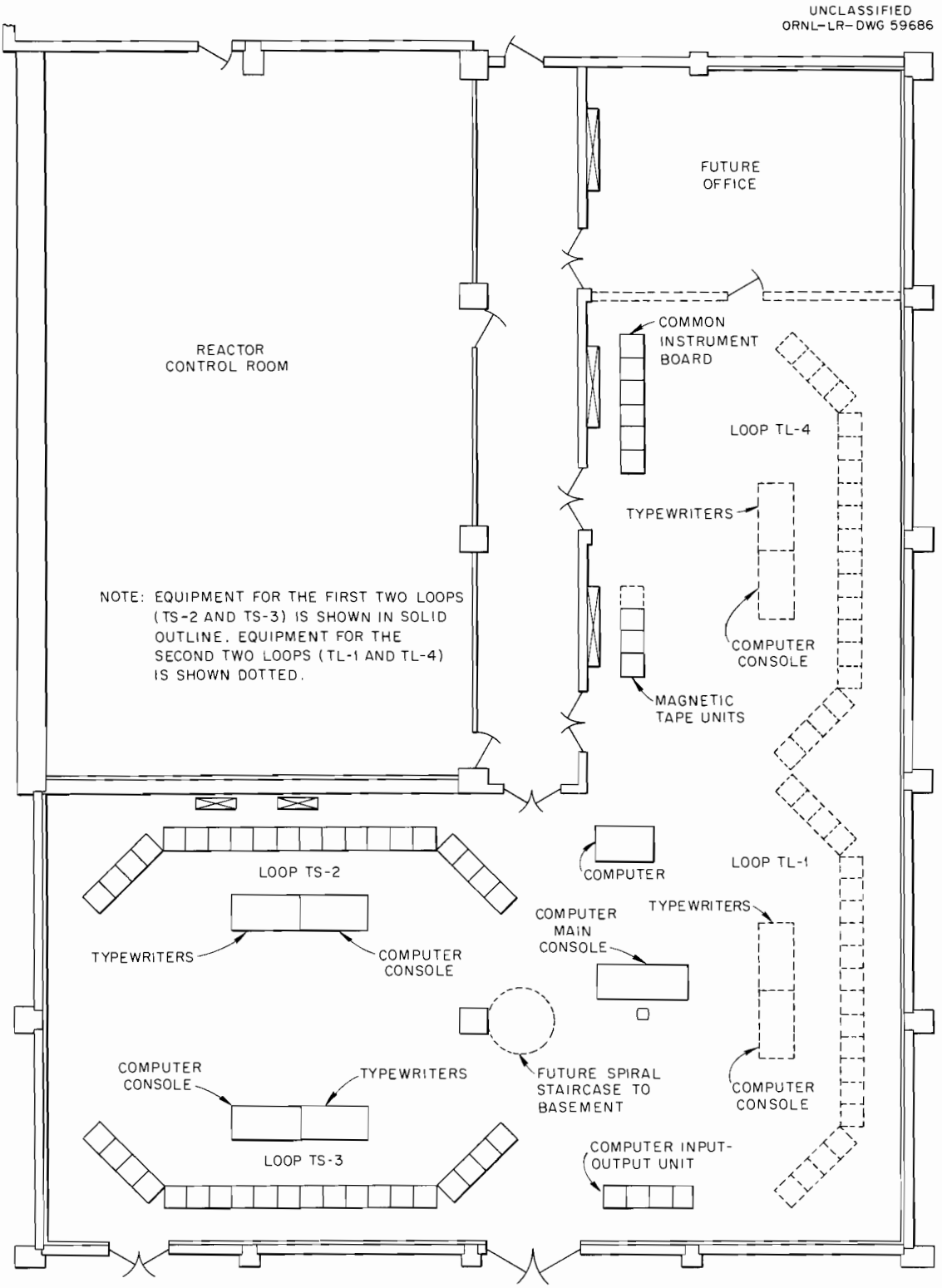

Fig. 7.2.1. Experimenters' Control Room Equipment Plan.

system, pipe-chase cooling system, and the sniffer gas system; (2) controls for the loop compressors, mainstream gas cooler, mainstream gas heater, remotely operated valves and valve-position indicators, the auxiliary blower, vacuum pump, gas transfer pump, pipe-chase coolers, cell cooler fans, and the cell dehumidifiers; and (3) miscellaneous items including scram and motor-driven rod-insertion switches, startup-and-run master switch, communications, elapsed-time meter, annunciator acknowledge and reset pushbutton, audible alarm (different sound for each loop), blower panels for radiation equipment, and the instrument power distribution panel.

7.2.3. Common Equipment Control Board

This control board consists of approximately six instrument cabinets (24 in. wide, 40 in. deep, 78 in. high) mounted on a 6-in. channel base wireway. It houses the instrumentation and controls for the equipment which is common to all loops. Annunciators and audible alarms are mounted on top of the cabinets in a manner similar to the experimenters' control board. The common equipment control board contains the following: (1) instrumentation for the gas distribution system, demineralized-water system, service water system, emergency cooling water system, instrument air system, plant air system, and the ac and battery power supplies; (2) controls for the demineralized-water pumps, cooler high-pressure feed water pump, and the ac and battery power supply circuit breaker controls and relaying; and (3) miscellaneous items including the audible alarm, annunciator acknowledge and reset pushbuttons, communications, and the elapsed-time meter.

7.3. Mainstream Instrumentation

7.3.1. General

This section discusses the mainstream instrumentation and its associated problems. Wherever possible, this instrumentation conforms to the design philosophy set forth in Section 7.1. The safety functions are discussed in Section 7.4 and will be treated only in a general way in this section. The control functions have not been established in sufficient detail to be described at this time. Measurement signals which are routed to the digital data-handling and computer system (see sec. 7.5) are described in this section as being "processed" by the computer. Detailed computer processing functions for each measurement may be found by reference to the Main Loop Instrument Flow Diagrams (see sec. 7.3.8). All instrument numbers refer to the instruments shown on the simplified mainstream instrumentation schematic diagram, Fig. 7.3.1, and are not the instrument numbers which appear on the reference drawings.

UNCLASSIFIED
ORNL-LR-DWG 59687

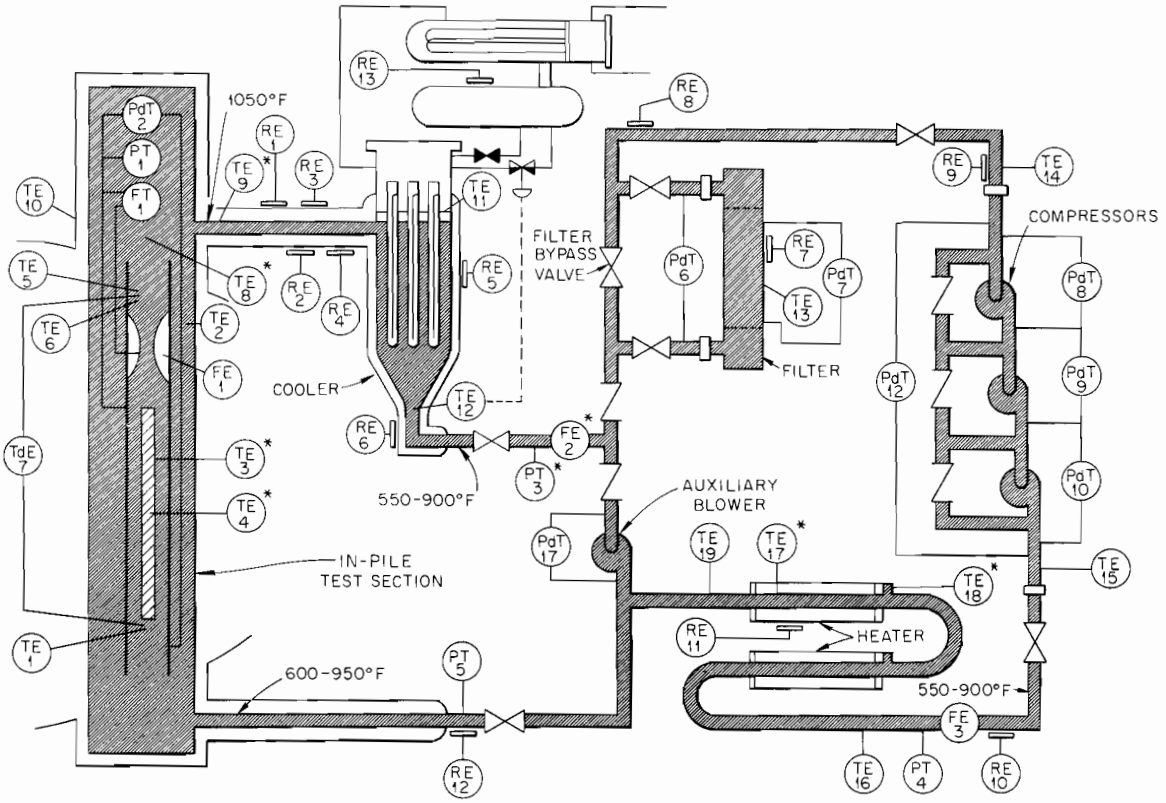

*DENOTES THAT MULTIPLE SENSORS ARE USED IN ACTUAL MEASUREMENT. SHOWN AS SINGLE SENSOR FOR SIMPLICITY.

OPERATING PRESSURE: 500 TO 1000 psia
OPERATING TEMPERATURES: AS INDICATED

(TE) TEMPERATURE ELEMENT
(FE) FLOW ELEMENT
(RE) RADIATION ELEMENT
(PT) PRESSURE TRANSMITTER
(FT) FLOW TRANSMITTER
(PdT) DIFFERENTIAL PRESSURE TRANSMITTER
(TdE) DIFFERENTIAL TEMPERATURE ELEMENT

Fig. 7.3.1. Mainstream Instrumentation Schematic Diagram.

7.3.2. Temperature Measurements

Sheathed thermocouples will be used as the primary sensing elements for all temperature measurements. All primary loop temperatures, except fuel element temperatures, will be measured with Chromel vs Alumel thermocouples. The fuel element temperatures will be measured with platinum vs platinum-10% rhodium thermocouples. Tungsten vs rhenium thermocouples have been considered as an alternate for this application. Adequate spare thermocouples will be installed where replacement is difficult or impossible.

An attemperated fuel assembly requires the following temperature measurements: fuel assembly inlet and outlet gas temperatures, attemperator stream outlet temperature, mixed mean outlet gas temperature, fuel assembly differential (ΔT) gas temperature, and fuel element surface and center temperatures. Attemperator stream outlet and fuel assembly outlet temperatures are not required for an unattemperated fuel assembly.

The test section inlet temperature (TE-1) is measured for the purpose of obtaining operational data only and is recorded, as well as routed, to the digital computer for processing. The effectiveness of attemperation is measured by the attemperator stream outlet temperature (TE-2). It is not recorded but is processed by the computer. The fuel element surface and central temperatures (TE-3 and TE-4) are measured at various points along the fuel element stringers for operating information and are processed by the computer. Present plans call for 19 fuel element surface thermocouples and 3 fuel element central thermocouples, but these requirements will vary with different test assemblies. The test section outlet temperature is measured by two thermocouples (TE-5 and TE-6), one of which goes to the computer for test section mass flow computation (and other functions) and the other is recorded and processed by the computer for operating information. The test section $\Delta T(T_d E\text{-}7)$ is measured by two thermocouples, differentially connected, and is used by the computer for test section power computation.

The mixed mean outlet gas temperature is measured with three thermocouples represented by (TE-8). This measurement is used to operate contacts in alarm circuits, reactor safety circuits, and loop cooler and compressor control circuits (see sec. 7.4). Provision is also made for future use of fuel element surface temperatures or test section outlet gas temperatues in the safety and control circuits. It should be noted that all the leads for these thermocouples, as well as other instrument leads, must be brought out through suitable connectors in the Bridgman closure and through connectors in the top nozzle outer tee just below the blind flange.

Thermocouple wells (TE-9) for future use are located in the outlet piping leading from the top nozzle. These could be used either in lieu of or in addition to the mixed mean outlet temperature measurements

for safety and control actions. The top nozzle temperature (TE-10) is also measured to assure that adequate top nozzle cooling is maintained. This measurement is processed by the computer.

The evaporative cooler tube sheet temperature (TE-11) is monitored for the purpose of detecting the absence of water on the tube sheet. The tube sheet is designed to withstand the maximum loop pressure and temperature, but very high thermal stresses may develop if the hot tube sheet is flooded with cold water subsequent to dry operation.

Primary loop temperature control is achieved by controlling condensate flow to the evaporative cooler. This control loop uses a two-out-of-three redundancy up to the control valve. Temperature measurements are obtained from three thermocouples (TE-12) located just downstream of the cooler. Details of how these thermocouples are to be installed through both primary and secondary containment have not been completely worked out, but several approaches seem to be feasible. If proposed analog studies indicate that an additional time lag in the measurement can be tolerated, this measurement will be made inside the experimenter's cell where only the primary loop piping must be penetrated. In this case, sheathed thermocouples could be welded into the main loop pipe.

The mainstream gas filter has one thermocouple (TE-13) which is located between the thermal insulation and lead shield enclosing the filter. This measurement is processed by the computer which provides an alarm on high temperature. Its purpose is to protect the lead shield from excessively high temperatures.

Compressor inlet temperature (TE-14) and compressor outlet temperatures (TE-15 and TE-16) are measured with sheathed thermocouples welded into the pipe. They are for operational information and are both recorded and transmitted to the computer for processing. The TE-16 measurement is used by the computer for compressor outlet mass flow computation.

Temperature measurements are made at several points on the mainstream gas heater pipe walls and on the heater lugs. These measurements are represented by thermocouples TE-17 and TE-18, respectively. Tentatively, there are eight pipe wall thermocouples and four heater lug thermocouples plus an equal number of spares. Thermocouples are attached to the pipe wall by welding and to the lugs by welding or brazing as required. The temperature measurements are indicated on instruments which contain switches with contacts in the heater cutoff and alarm circuits. If computer processing is required, the spare thermocouples will be used. An additional temperature measurement (TE-19) is made in the heater outlet gas stream using a sheathed thermocouple welded into the pipe. This measurement is also used for a high-temperature alarm and to protect the heater against over temperature.

A thermocouple (not shown on the simplified schematic diagram) is installed in the transformer that supplies power to the heater. Its

signal will trip the heater circuit breaker and provide an alarm on excessive transformer temperatures.

7.3.3. Pressure Measurements

Static pressure measurements are made on the primary loop at the test section outlet (attemperated test section only), mainstream gas cooler outlet, loop compressor outlet, and near the test section inlet. Differential pressure is measured across the test section, the mainstream gas filter, the absolute filter portion of the mainstream gas filter, each of the loop compressors, the auxiliary blower, and across the group of loop compressors.

The test section outlet static pressure (PT-1) and test section pressure differential (P_dT-2) are measured with unbonded strain-gage-type transducers mounted inside the primary containment between the shield plug and the Bridgman closure. Installing these transducers inside the primary containment eliminates the necessity of penetrating the Bridgman closure with pneumatic lines. The purpose of measuring static pressure at this point is to enable a test section mass flow computation to be made by the computer. Differential pressure across the test section is measured to detect abnormal conditions of the type that would occur if a fuel element became detached from its holder. This measurement is recorded continuously and also processed by the computer.

A static pressure measurement (PT-3) downstream of the evaporative cooler is used in the reactor safety circuits (see sec. 7.4) and therefore consists of three independent channels to provide the required two-out-of-three redundancy. These measurements are also used in the compressor speed control, heater control, and cooler control circuits. In addition, one of the three channels is fed into an analog computer which computes mass flow continuously. All three pressure channels are recorded as well as processed by the digital computer, and all three channels provide both high- and low-pressure alarms.

The compressor outlet static pressure (PT-4) is measured and recorded for the purpose of mass flow computation by the digital computer. The test section inlet static pressure measurement (PT-5) is needed when the reactor is operating with the loop shut down, since pressure is required in the in-pile section to eliminate column compressive loading of the through-tube (see sec. 5.13). This measurement also provides high- and low-pressure alarms.

Differential pressure is measured across the mainstream gas filter assembly (P_dT-6) and across the absolute filter portion of the assembly (P_dT-7) to detect either clogging or failure of the filter element. These measurements are not recorded or indicated but are processed by the computer.

Individual differential pressures across the loop compressors (P_dT-8, and P_dT-9, and P_dT-10) and across the auxiliary blower (P_dT-11) as well as total differential pressure across the three loop compressors (P_dT-12) are indicated or recorded and processed by the computer. Contacts for alarm circuits are provided and, in the individual loop compressor ΔP instruments, contacts for compressor speed control are provided.

7.3.4. Flow Measurements

Flow is measured at three points in the primary loop if an attemperated test section is used. Venturi flow elements are used in all three measurements. The test section outlet volume flow (FE-1) is recorded and also routed to the computer where it is used in conjunction with pressure and temperature signals to compute test section mass flow. This measurement is not required in an unattemperated test section because mass flow would be the same in the test section as in the loop proper. The flow transmitter (FT-1) used for this measurement is of the unbonded strain-gage type and is similar to the test section ΔP transmitter (P_dT-2). It will also be installed inside the primary containment between the shield plug and the Bridgman closure to avoid penetrating the closure with pneumatic instrument lines.

The main flow-measuring device (FE-2) is installed in a line downstream of the mainstream gas cooler. This measurement is used for the reactor safety circuits, loop heater and cooler control circuits, compressor speed control circuits, and low flow alarm circuits (see sec. 7.4). Since the reactor safety circuits require two-out-of-three redundancy, this measurement has three identical volume flow-measuring channels. The signal from one channel is also used by the analog computer for continuous mass flow computation. Signals from all three volume flow channels are routed to the digital computer where they are used, among other things, for computing mass flow.

The compressor outlet volume flow (FE-3) is measured primarily to detect failure of the check valves for the auxiliary blower. When the loop compressors are running the auxiliary blower is shut down. The flow measured at the compressor outlet should be the same as that measured at the mainstream gas cooler outlet. Conversely, when the auxiliary blower is operating, the loop compressors are shut down and no flow will pass through them. Deviation from these conditions indicates failure of the check valves at the auxiliary blower to function properly. Compressor outlet flow is recorded and processed by the computer. It has no tie-in to reactor safety circuits or control circuits but does provide an alarm on low flow.

7.3.5. Power Measurements

Thermal power generated in the test section is computed by digital computer multiplication of test section mass flow and ΔT. Electrical

power to heaters and compressors is measured and recorded for operational purposes.

7.3.6. Radiation Measurements

Ionization chambers are used for all gamma-ray measurements on the primary loop. These detectors are used for all radiation measurements with the exception of one location. A delayed-neutron detector is installed at this location. The ionization chambers are installed in lead shields. Collimators are incorporated in the shield so that the ion chamber readings will be due to the total gamma-ray activity in a known length of loop piping or a known volume of the loop component. Locations of the mainstream radiation monitors are shown in Fig. 7.3.1.

Radiation element RE-1 is a delayed-neutron monitor used to detect a release of fissionable material from the fuel assembly to the loop gas. Radiation elements RE-2, RE-3, and RE-4 are used to measure the total gamma-ray activity in a known section of loop piping while the loop is in operation. After the loop is shut down and the loop gas is purged from the loop, measurements of fission-product deposition on the loop piping as a function of distance from the test specimen may be obtained. The gamma activity in the top of the evaporative cooler from fission products in the sweep gas and fission-product deposition in the cooler is measured by radiation element RE-5. Radiation element RE-6 is used in conjunction with RE-4 to measure the difference in loop gas activity between the cooler inlet and outlet. Gamma activity in the mainstream gas filter is monitored by radiation element RE-7. Radiation element RE-8 is used to measure the gamma activity in the loop piping downstream from the filter and, when used in conjunction with RE-6, the effectiveness of the filter may be determined. Radiation elements RE-9 and RE-10 are for monitoring the gamma activity in a known length of primary loop piping at the inlet and outlet of the loop compressors. Radiation element RE-11 monitors the loop piping which passes through the mainstream gas heater, and data taken with this monitor after loop shutdown may be compared with data from other monitors on loop piping to determine whether fission-product deposition on the pipe walls of the hotter piping is different from deposition at other locations. The loop-gas activity downstream from the loop heater and at the test section inlet is monitored by radiation element RE-12. Radiation element RE-13 is located on the condensate storage tank for the evaporative cooler. This monitor is used to detect any leakage of loop gas into the steam system of the evaporative cooler.

7.3.7. Miscellaneous Measurements

Other measurements consist of frequency, voltage, and current measurements in the power circuits to the loop compressors.

7.3.8. Project References

Preliminary Design Drawings (CF 61-6-2)

Instrument Diagrams, Main Loop	Q-2120-1, 2, 3,4
Instrument Diagram, Radiation Instruments	Q-2120-26

7.4. Experiment Safety and Protective Actions

7.4.1. General

In order to prevent unnecessary reactor shutdowns as a result of instrument failures, three independent safety channels will be provided for each control variable that can cause an automatic reactor scram or automatic motor-driven rod insertion (AMDRI). The signals from these safety channels will be arranged in a coincidence-redundance system such that two out of three of the signals must indicate that an unsafe condition exists before the reactor can be shut down by a scram or AMDRI. The conditions that can lead to reactor shutdowns are described in this section. It should be noted in subsequent paragraphs that full cooling of the loop cannot precede a scram because full cooling can cause a low-pressure scram.

7.4.2. Conditions Leading to Reactor Shutdowns

High Test Section Exit Mixed Mean Gas Temperature (Alternate – High Fuel Element Cladding Temperature). The control actions initiated by a high test section exit mixed mean gas temperature are the primary protection of the loop against excessive temperatures. An alarm will warn the loop operator when the temperature reaches 1075°F. If the temperature reaches 1100°F, the loop compressor speed will automatically increase to the maximum allowable, and the mainstream gas heater will turn off. If the temperature reaches 1150°F, the reactor will automatically scram, and the mainstream gas cooler will automatically adjust to its maximum cooling capability.

Low Loop Pressure. An alarm will warn the loop operator when the loop gas pressure falls to 5% below normal. The operator will turn on the gas transfer pump and close the valves in all lines through which gas can be removed from the loop. The transfer pump will be shut off manually when the desired pressure is restored or automatically if excessive pressures are reached inadvertently. If the pressure falls to 30% below normal, the reactor will automatically scram, the mainstream gas heater will automatically turn off, and the mainstream gas cooler will automatically adjust to its maximum cooling capability.

High Loop Pressure. An alarm will warn the loop operator when the loop gas pressure increases to 5% above normal. The operator will attempt corrective action. If the pressure increases to 10% above normal the mainstream gas heater and the transfer pump in the gas transfer system will automatically turn off. If the loop pressure reaches 1000 psig, the loop relief valves should open (highest normal operating pressure is 850 psig when the relief valves are set at 1000 psig). If the pressure reaches 1100 psig, it will be evident that the relief valves failed to open. The reactor will then be automatically scrammed, and the mainstream gas cooler will be automatically adjusted to it maximum cooling capability.

Low Service Water System Supply Pressure at Mainstream Gas Cooler Condenser Elevation. An alarm will warn the loop operator when the service water pressure drops to 20 psig. The operator will attempt corrective action. If the pressure drops to 10 psig, the reactor will be shut down by an automatic motor-driven rod insertion, the mainstream gas heater will turn off automatically, and the mainstream gas cooler will automatically adjust to its maximum cooling capacity.

Low Loop Gas Volume Flow Rate. An alarm will warn the loop operator when the loop gas volume flow rate falls to 5% below normal. The operator will attempt corrective action. If the flow rate falls to 20% below normal the loop compressor speed will automatically increase to the maximum allowable. If the flow rate falls to 30% below normal, the reactor will automatically scram, the mainstream gas cooler will automatically adjust to its maximum cooling capability, and the mainstream gas heater will automatically turn off. If the flow rate falls to 40% below normal, the auxiliary blower will start automatically.

Low Through-Tube Nozzle Cooling Flow Rate in Any Circuit. An alarm will warn the loop operator when the flow rate drops 10%. The operator will attempt corrective action. If the flow rates drops 25%, the mainstream gas heater will automatically shut off, the mainstream gas cooler will automatically adjust to its maximum cooling capability, and the reactor will be shut down by an automatic motor-driven rod insertion.

Low Demineralized-Water Head Tank Level. An alarm will warn the loop operator when the level drops to 5 ft, and the valve which permits water addition to the tank from the EGCR condensate pump discharge will automatically open. If the level drops to 3 ft, a second alarm will sound, the reactor will be shut down by an automatic motor-driven rod insertion, the mainstream gas heater will automatically turn off, and the mainstream gas cooler will automatically adjust to its maximum cooling capability.

High Demineralized-Water Temperature (In Head Tank). A high temperature in the demineralized-water head tank will be indication of probable failure of the service water flow to the demineralized-water

coolers. An alarm will warn the loop operator when the demineralized-water temperature reaches 120°F. The operator will attempt corrective action. If the water temperature reaches 150°F, the mainstream gas cooler will automatically adjust to its maximum cooling capability, the mainstream gas heater will be automatically shut off, and the reactor will be shut down by an automatic motor-driven rod insertion.

High Cell Water Level. A dangerous condition can arise if one of the water lines in the experimenters' cell ruptures. If attempts to drain the cell fail, there is a possibility of water reaching the hot loop piping and causing it to rupture, malfunctioning of electrical valve operators, malfunctioning of instruments, and eventual rupture of the cell rupture disk by the high water. Therefore an alarm will warn the loop operator when the water level in the cell drain line reaches 2 in. below the cell floor. If the cell vent line is open and no radioactive gas is present in the cell, the operator will open the cell drain valves and attempt to cut off the source of water. If the level drops to 8 in. below the cell floor level the drain valve will automatically close. If the water level reaches 6 in. above the floor level, the mainstream gas heater will automatically turn off, the reactor will be shut down by an automatic motor-driven rod insertion, and the mainstream gas cooler will automatically adjust to its maximum cooling capability.

High Cell Temperature. The effect of high cell temperatures on instruments located in the cell is of concern. With the cell temperature above 120°F, the instruments might fail unpredictably and could not be relied upon for safety. Most of the safety instrument sensors are located in the cells. An alarm will warn the loop operator when the air flow from either cell cooler drops to 50% of normal or the cell temperature increases to 110°F. The operator will attempt corrective action. If the cell temperature reaches 120°F, the mainstream gas heater, the vacuum pump, and the transfer pump will automatically turn off. If the cell temperature reaches 130°F, the reactor will be shut down by an automatic motor-driven rod insertion, and the mainstream gas cooler will automatically adjust to its maximum cooling capability.

Low Cell Temperature (CO_2 Operation Only). When the loop is operating with CO_2 as the loop gas, the experimenters' cell temperature is maintained above 88°F to prevent condensation of CO_2 in the gas lines in the cell. The cell cooling water system has an automatic flow control valve in the service water line feeding each cooler. This valve adjusts the cooling water flow to maintain the cell air temperature at 95°F. If the cell air temperature drops to 92°F, a 7-kw electrical heating element in one of the two coolers will be energized until the air temperature is increased to 95°F. If the air temperature continues to drop, the heating element in the other cooler will be energized when the temperature reaches 90°F. If this control system malfunctions and the cell air temperature drops to 85°F an alarm will warn the loop operator. The operator will turn off the cooling water supply to the

coolers. If the temperature reaches 80°F, the loop operator will shut the reactor down with a motor-driven rod insertion.

Low Demineralized-Water Flow from Auxiliary Blower. An alarm will warn the loop operator when the flow drops to 12 gpm. If the flow decreases to 8 gpm, the mainstream gas heater will automatically turn off, the mainstream gas cooler will automatically adjust to its maximum cooling capability, and the reactor will be shut down by an automatic motor-driven rod insertion.

Pressure Change in the Upper or Lower Sniffer Region. An alarm will warn the loop operator when the pressure in either sniffer region rises to 85 psig or falls to 22 psig. If the pressure rises to 135 psig or falls to 5 psig the mainstream gas heater will automatically turn off, the mainstream gas cooler will automatically adjust to its maximum cooling capability, and the reactor will be shut down by an automatic motor-driven rod insertion.

Failure to Switchover Loop Compressor. If a compressor operating off one power supply fails, one of the two compressors operating off the other power supply must be switched over by loop operator action. A failure to get the two compressors running on separate power supplies within 3 min after the failure will result in a reactor shutdown by an automatic motor-driven rod insertion.

Fuel Assembly Rupture (Fission Break). A motor-driven rod insertion may be initiated at the option of the loop operator if a serious rupture of the fuel assembly occurs. This rupture will be detected by a BF_3 delayed-neutron detector located as close to the experimental assembly as practicable.

Loss of Either the Y-12 or EGCR Power Supplies at the Main Switchgear. Following the loss of power on either main bus the mainstream gas heater will automatically turn off, the mainstream gas cooler will automatically adjust to its maximum cooling capability, and the reactor will be shut down by an automatic motor-driven rod insertion.

Main DC Power Supply Failure. A low dc bus voltage will cause the reactor to be shut down by an automatic motor-driven rod insertion. The loop operator will shut off the mainstream gas heater and adjust the mainstream gas cooler to its maximum cooling capability.

7.4.3. Special Operating Switches

Experiment Mode Selector Switch. This switch will be located in the reactor control room and will provide a tie-in between the experimenters' safety circuits and the reactor. The switch will have three positions: operate, test, and disconnect. Functional operation of this switch will not be clear until the EGCR reactor control system design is completed.

Startup-Run Switch. This switch will be located in the experimenters' control room. In the startup position the reactor will be held subcritical and operational interlocks will be bypassed. In the run position operational interlocks will be activated and it will be permissible to drive the reactor critical.

Reactor Operations Emergency Shutdown Switch. In the event of an emergency condition which requires the shutdown of all experimental loops, a switch is provided in the EGCR control room which will shut off all mainstream gas heaters, operate all mainstream gas coolers at maximum capacity, and scram the reactor.

Manual Reactor Scram and MDRI Switches. A manual reactor scram switch and a switch which will initiate a motor-driven rod insertion (MDRI) will be located in the experimenters' control room.

7.4.4. Project References

Design Criteria (CF 61-6-3)

Criteria for EGCR Loop Safety System — Code H.4.0

7.5. Digital Data-Handling and Computer System

7.5.1. General

The general data-handling operations for the EGCR experimental loops will be facilitated by the use of a digital data-handling and computer system. This system will reduce the amount of information which would otherwise have to be logged during normal loop operation and will give excellent data coverage during abnormal operation. The system will continuously scan the data points for abnormal (alarm) conditions and log them if they occur. In order to maintain a historical record of loop operation, the data will be stored on magnetic tapes, either continuously or periodically.

The use of magnetic tape will permit the stored data to be coded on a common time basis, sorted, compiled, and used automatically in calculations by the computer. This system obviates the otherwise tedious procedure of reading a number of strip chart records simultaneously and reconstructing the timing basis. Accurate data summaries and analyses will be produced rapidly. If desired at some future time, the computer can be used to produce operating information and to provide automatic loop control.

The digital data-handling and computer system will provide flexibility in both the method and sequence of data collection, recording,

and retrieval. This will be possible because a program change in the computer will be the only step required to change the input scanning sequence and other operations performed upon the data by the data-handling system. Also, the system will be flexible from the standpoint of use with other loops or systems, since the only requirements for use with other systems are to supply the inputs and to write the operating program for the computer.

The use of this system will prevent unnecessary loop or reactor shutdowns by the loop operator by providing instrument validity checks and by indicating variable trends. The system will provide flexibility in operation by the use of different programs for different modes of loop operation. Since all modes of data handling and recording will be automatic, the operator can focus attention on loop operation and yet have data recorded in a useful form. The system can be set to control the amount and method of data display and recording. For example, it will be possible to have all the inputs on alarm scan and have no data recorded until the alarm setpoint is reached, at which time the system will print out the operating information on the typewriters or store it on magnetic tape for later processing.

7.5.2. System Functions

The digital data-handling and computer system will perform three main functions: data handling, on-line computing, and off-line data reduction.

Data handling will consist of the collection of data from the loop sensors, long-time storage of data relating to loop operation, logging, and alarm scanning against preset limits. Approximately 125 inputs will be transmitted to the system from each experimental loop. During normal loop operation, less than one-half these variables will be logged or regularly displayed. The chief loop operator will have provisions at his console for selecting the portion of the input data which will be recorded on magnetic tape for use by off-line computers during final analysis of the experimental results. The system has the capability of recording input data at extremely fast rates for long periods of time. Most input signals will be scanned for upper and/or lower limits, and the system will provide alarms when these limits are exceeded. The inputs will be scanned at a rate of 500 points per second. Each loop will have an operating console from which the loop operator can request certain modes of data display, change alarm setpoints, and make other data-handling and computer changes, so long as they do not affect the other loops. When the other loops are affected, the changes will be carried out by the chief loop operator at his console.

On-line computing will consist of the calculation, in real time, of information for the loop operators and the calculation of variable alarm points for the loop. The system will have the ability to do such

computations as the reduction of analog signals to digital values, scaling, linearizing, span adjusting, etc., so that the data can be displayed in engineering units. It will summarize selected data for loop operators. The system will calculate and display operating guides for the operator, and it will predict variable values which cannot be measured directly, such as fuel element temperature profiles. It will also perform experiment analyses during loop operations and will prepare the experimental data for final analysis. It will perform alarm scanning on the basis of trends of a single variable or a group of variables or on the basis of a function of several variables. It will also calculate control signals if automatic loop control is eventually selected.

Off-line data reduction will consist of the compilation of historical test data during experimental operation for use by an external computer for final analysis. The system will store all data on magnetic tape continuously, periodically, or upon demand for use by the system computer or other computers for final experiment analysis. The data storage on tape will be such that the information can be recalled for display by the loop operator. The data will be stored in a form suitable for use by the Oracle and the IBM 7090.

7.5.3. System Design and Operation

The digital data-handling and computer system is required to be as reliable as conventional single instruments and to have an accuracy equal to or greater than conventional instruments. It must be compatible with the instruments accepted by ORNL for reactor system use. Also, it must be sufficiently flexible that changes in loop experiments or the requirements of modified loop configurations can be easily met without additional major data equipment.

The digital data-handling and computer system will be designed to handle approximately 560 analog inputs and 54 one-bit digital inputs from the experimental loops. Expansion of the input capabilities to 1020 analog inputs and 108 or more digital inputs will be possible. Analog signals will be handled in the form of millivolts dc, 10 to 50 ma dc, and 110 and 220 v ac. Digital inputs will be handled in the form of contact closures. The system will be capable of scanning approximately 125 analog signals from each loop at a rate of 500 points per second and will handle 13 digital inputs from each loop.

The input scanning at the 500 point per second rate will be done automatically and continuously without program control. The inputs will be digitized at this same rate and compared against preset upper and/or lower limits for alarms. Under certain abnormal loop operating conditions, the system will scan selected critical inputs (up to 128) every 1/4 sec. This scan will be under program control.

Any portion of the inputs can be stored on magnetic tape at the input scan rate continuously, periodically, during alarm conditions, or

as programed by the loop operator. The information stored on the tape can then be read back to the computer for analysis or fed to external computers, such as the Oracle or IBM-7090, for final data analysis.

The system will log selected data and will print-out computed functions on the typewriters for each experimental loop, as follows: (1) normal trend log at 1/2-, 1-, 2-, 4-, or 8-hr intervals, (2) demand trend log at high speed, (3) trend log summary, averages, etc., every 8 and 24 hr, (4) off-normal values during transients or upsets, (5) special demand logs, including the comprehensive log which includes all variables, (6) special summaries, and (7) selected groups of variables at high speed. As previously noted, the system will also compute on-line information relating to the operation and progress of the loop and present the results to the loop operator.

7.5.4. System Inputs

The digital data-handling and computer system will be designed to accept 125 analog and 13 or more digital inputs from each experimental loop. The type and number of proposed inputs to the system from each loop are as follows: temperature, 70 (thermocouples, including 12 spares); flow, 6; pressure, 13; radiation, 26; miscellaneous, 4 (such as reactor power and neutron flux); digital inputs, 6 to 12 (relays, switches, and valves); manual inputs, any number of manual inputs placed in the machine by the loop operator via the operator's console by switches, potentiometers, or a keyboard.

7.5.5. System Description

The digital data-handling and computer system for performing the functions and operations described above is shown schematically in Fig. 7.5.1. This system includes an analog input-output unit (analog to digital converter) containing amplifiers, relays, thermocouple references, and power supplies. The input signals are first routed to this unit in groups from each loop. In this unit they are switched, fed to amplifiers (for low-level signals, such as thermocouples), and then converted from analog to digital signals. When signals require reconversion from digital to analog values for control signals or for analog recording, they are handled in this same unit. The digital input-output unit handles the digital or contact closure signals from relays, paper-tape readers, etc., and transmits digital values of signals to typewriters, printers, punches, display devices, and annunciators. The annunciators may be included as part of the data system or they may be the conventional annunciators on the instrument panel. The memory unit stores signals fed from the analog input-output unit. The memory may be a magnetic drum or magnetic core device. The programs for control of the data system are fed into the memory. The memory also receives the various constants and data required to linearize thermocouple signals,

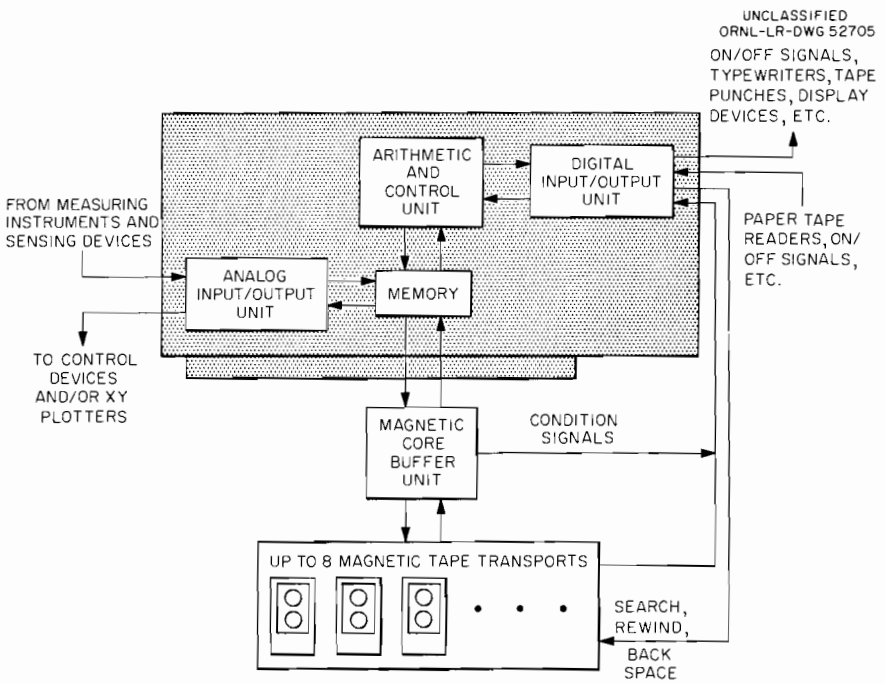

Fig. 7.5.1. Information and Control Signal Flow, Computer, and Magnetic Tape System.

perform calculations, make alarm comparisons, and perform other computer functions, such as storage of computed values for readout of the magnetic tape units or readout to the arithmetic and control unit for transmission to typewriters, punches, or alarms. The arithmetic and control unit serves two purposes: the control of the system, including all input and output devices, and the performance of calculations. Both these functions are performed from a program stored in the memory. The magnetic tape buffer and tape drive units store on tape the signal values originally stored in the memory. These tapes, in addition to being data-storage devices, can be used to provide additional memory for the computer.

A flow diagram for the data system, including four operating consoles for four loops with two output typewriters per loop is shown in Fig. 7.5.2. Also shown is the chief operator's console, which is the master control for the system. It is only through this console that system internal programs can be changed.

Project References

Specifications (CF 61-6-5)

EGCR Loops Digital Data Collecting and Computing System Specifications	JS-128-149

7.6. Auxiliary Instrument and Control Boards

A number of auxiliary instrument and control boards for the experimental loops will be located outside of the experimenters' control room. In general, these boards will be manned only occasionally when specific loop operations are to be performed. The individual instrument control boards will include the following:

Experimenters' Crane Bay

- Helium supply system
- CO_2 supply system
- Decontamination system
- Motor-generator sets and clutches

Experimenter's Utility Tunnel

- Sampling station

Service Machine Floor

- Experiment removal cooling system
- Experimental fuel assembly storage holes

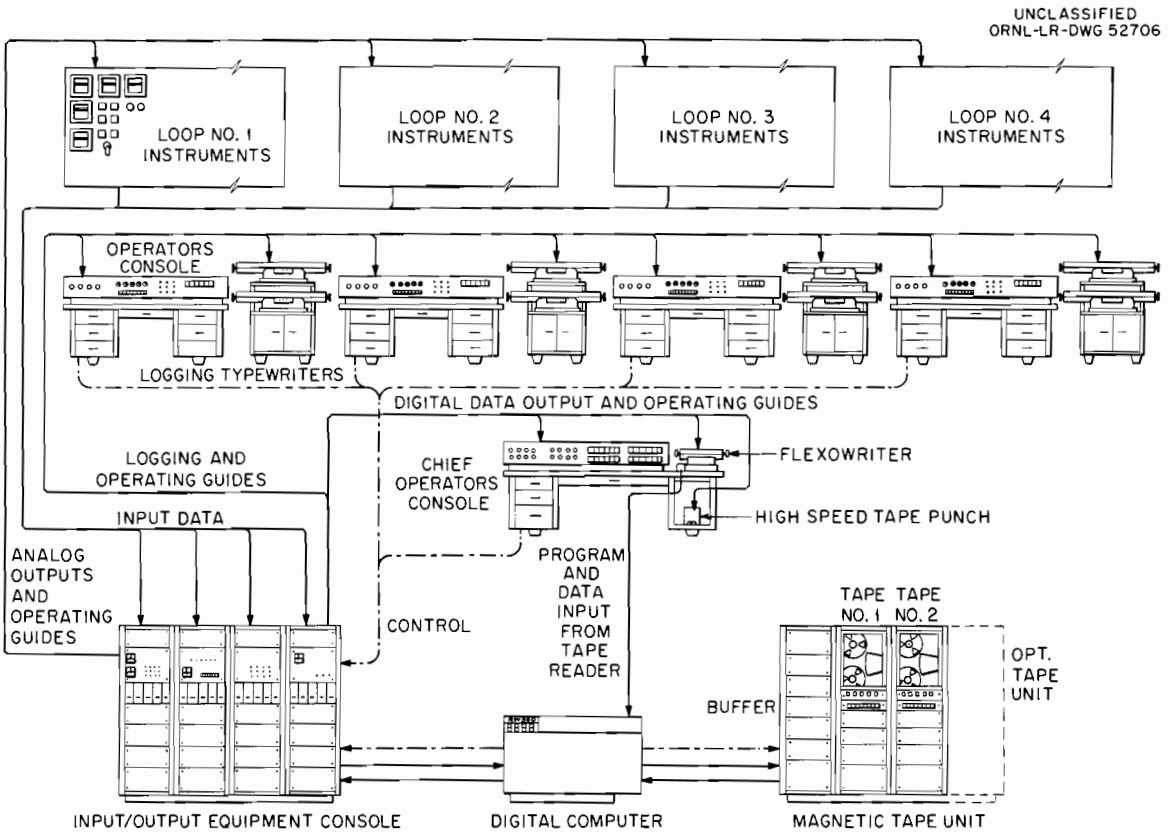

Fig. 7.5.2. Data Gathering and Computing System for In-Pile Loop Test Facility.

In addition to the above-listed instrument and control boards, numerous small panels will be employed in the experimenters' crane bay, utility tunnel, and cells and inside the reactor containment vessel for the mounting of transmitters, power supplies, amplifiers, local annunciators, local indicators, etc.

8. SPECIAL OPERATIONS

8.1. Instrumented Experimental Assembly Handling

The operations involved in handling an instrumented experimental assembly can be grouped into three broad classifications or phases: preirradiation, irradiation, and postirradiation. The preirradiation phase includes assembly of the experimental equipment, shipment to the EGCR, final non-nuclear testing and inspection, and positioning for loading into the experimental loop. The irradiation phase includes actual loading into the loop, operation at power, temporary removal from the loop, storage in the experimental assembly storage holes, replacement of the closure gasket, reinsertion into the loop, and final removal from the loop. The postirradiation phase includes prolonged storage in the storage facility, separation of fuel-bearing sections from the support structure, loading of fuel-bearing sections into the carrier, transportation of the carrier to the hot cell, removal of the fuel-bearing sections from the carrier and insertion of them into the hot cell, and disassembly of the fuel-bearing section. Figure 8.1.1 is a flow diagram showing the major steps in the handling of instrumented experimental assemblies.

8.1.1. Preirradiation Phase

The preirradiation phase covers the period from final assembly to initial installation in the loop. The final assembly of the various component parts, such as fuel elements, shield plug, Bridgman closure, and instrumentation, will be done in the experimenters' shop at some offsite location. Final sizing, gaging, and testing to insure proper fit, alignment, and operation in the loop will be done at that time. Assembly will take place on a handling carrier which will provide adequate support for the 42-ft-long experimental assembly. With the completed assembly fastened in the carrier and a protective covering in place, the carrier will be loaded onto a truck by a mobile crane, or a lift truck, for shipment to the EGCR site.

At the EGCR site the carrier will be removed from the truck by a mobile crane or other means and wheeled into the reactor building through the equipment airlock. On the ground floor the protective covering will be removed from the carrier and the final inspection will be completed. After final inspection, the carrier with the attached instrumented experimental assembly will be raised to the vertical position by the main hoist of the service-machine crane. The auxiliary hoist of the service-machine crane will then be connected to the top of the instrumented assembly, and the assembly will be separated from the handling carrier. Next, the assembly may be inserted into the loop either directly with the crane or by means of the service machine. If the service machine is to be used,

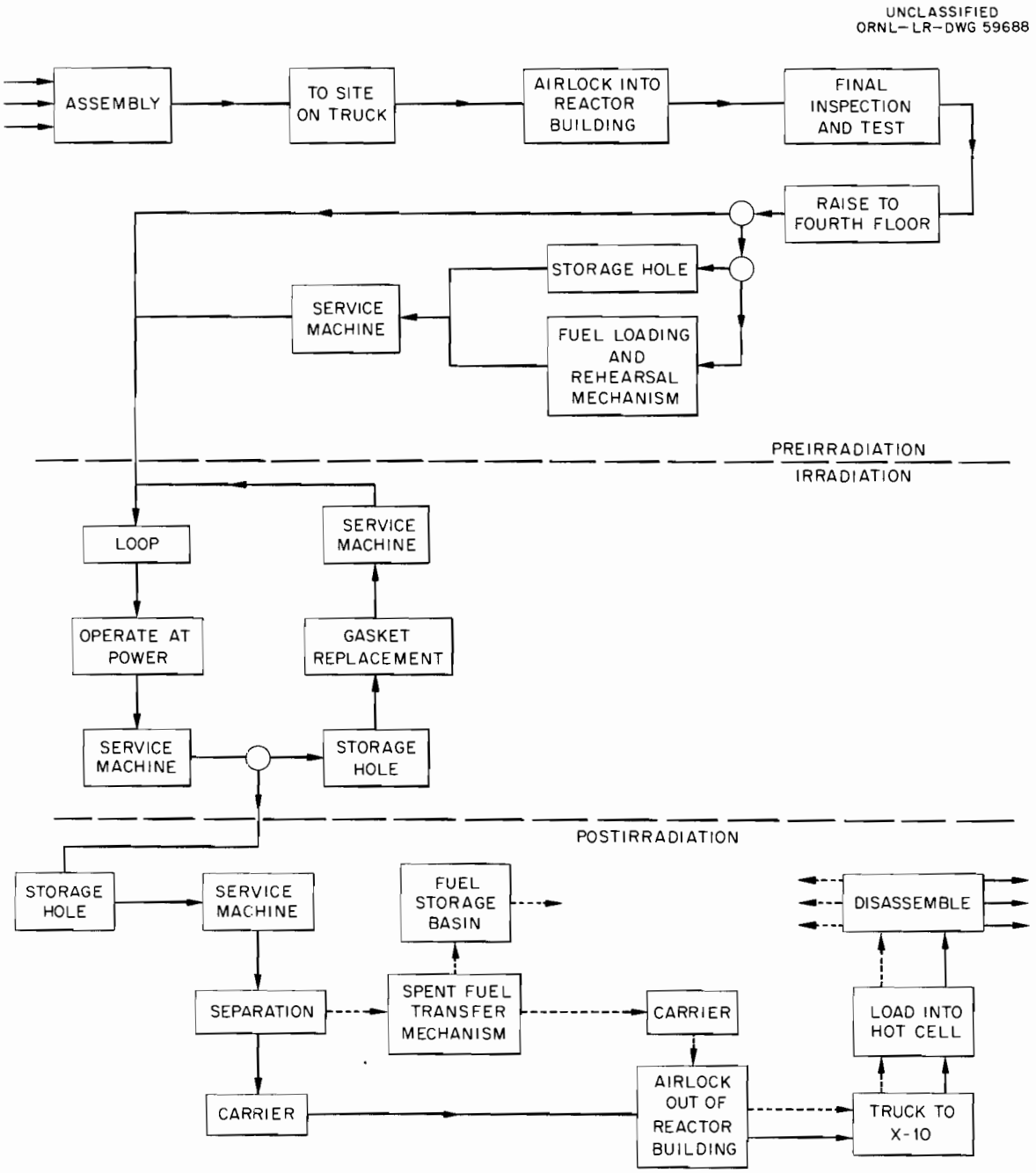

Fig. 8.1.1. Instrumented Experimental Assembly Handling Flow Diagram.

the assembly must first be lowered into either the loading and rehearsal mechanism or into one of the sotrage holes and then picked up by the service machine. The loading and rehearsal mechanism will accept an instrument assembly designed for a small loop but not one designed for a large loop.

8.1.2. Irradiation Phase

The irradiation phase will cover the period from initial loading of the instrumented experimental assembly into the loop until the time when the experiment is completed and no further irradiation of the assembly is desired. After the assembly is lowered into the loop by either the crane or the service machine, the Bridgman closure will be sealed, the instrument leads connected, and the top blind flange bolted down. Loop operation will be started, and the reactor will be brought to power in accordance with detailed checkout and startup procedures. Power operation will be continued until a routine or emergency shutdown is required.

An instrumented assembly may be removed from the loop either because the experiment is finished or because some loop component must be repaired which necessitates assembly removal. To remove an instrumented assembly, the reactor will be shut down, the service machine will be connected to the loop top nozzle, and the assembly will be removed from the loop by the service machine. During removal, the assembly will be cooled by the experimental assembly removal cooling system (see sec. 5.12). After the assembly is entirely in the service machine, a dummy shield plug will be inserted into the loop, the service machine will be moved away, and the reactor will be returned to power, if desired.

Next, the service machine will be moved to one of the special storage holes (see sec. 5.5), and the instrumented experimental assembly will be lowered for storage. The assembly will stay in the storage facility until reinsertion into the loop is possible or until the fuel portion of the assembly can be shipped to the hot cell facility. If reinsertion into the loop is desired, the crush-type gasket on the Bridgman closure must be replaced. This will be done with special fixtures at the storage hole. Immediately after gasket replacement, the assembly will be picked up by the service machine and inserted in the loop.

8.1.3. Postirradiation Phase

The postirradiation phase of instrumented experimental assembly handling starts with prolonged storage in a storage hole and continues through the disassembly of the fuel-bearing section in a hot cell. The instrumented assembly will remain in the storage hole until the decay heat from the fuel has decreased to the point where the assembly carrier can be used to ship the fuel to a hot cell. At this time the service machine will pick up the instrumented experimental assembly and lower it part way into the carrier which has been positioned in a cradle in the fourth

floor hatchway. The fueled portion of the assembly, which is about 13 ft long, will then be separated from the remainder of the assembly by a cut-off mechanism located at the top of the carrier. The Bridgman closure plus the shield plug and support structure will be returned to the service machine and the carrier will be closed.

Next, the carrier will be lowered to a dolly on the ground floor, tipped over on its side, and removed from the reactor containment vessel through the equipment airlock. It will then be loaded on a truck and taken to a hot cell facility such as the Physical Examination Hot Cells-B (previously known as the segmenting cell) located in Building 3026-D at ORNL. At the hot cell facility the carrier will be moved in a horizontal position into the loading room where the fuel-bearing elements will be removed from the carrier and inserted into the hot cell with the aid of special cooling and handling apparatus. Once in the hot cell, the fuel-bearing elements will be taken apart and prepared for movement to other examination facilities.

Those portions of the instrumented experimental assembly remaining in the service machine after it is moved away from the fuel carrier will be removed by moving the service machine over to the spent fuel transfer mechanism. Successive sections of the assembly will be cut off with a shear and transferred to the fuel storage basin until only the upper 14 ft of assembly, consisting of the Bridgman closure and shield plug, remains. This remaining portion will be lowered from the service machine into a carrier for transportation to a hot cell for reclamation of usable parts.

Certain types of instrumented experimental assemblies may also be disposed of by transferring both fuel-bearing elements and support structure to the fuel storage basin by means of the spent fuel transfer mechanism. The large assembly carrier would not be needed for this type of disposal.

8.2. Through-Tube Replacement

The reactor through-tube is a loop primary containment component extending through the recator core. Inside the EGCR core the through-tube is subjected to severe gamma and neutron radiation. Since the properties of the tube will change as the result of this exposure, the through-tube is designed as a replaceable item. In order to replace the tube, the welds which attach the through-tube to the top and bottom nozzle tees must be removed by a remotely operated weld-cutting machine. After replacement of the through-tube, new welds must be completed by a remotely operated welding machine. These welds proved the seal between the loop gas and the reactor or buffer gas.

During the entire through-tube replacement operation the reactor will be shut down and the reactor gas removed. The reactor fuel elements

will not be removed from the core. The reactor will be precooled to permit an estimated 50 hr of continuous working time before the reactor must be refilled with gas and the reactor cooling system started.

If possible, the through-tube to be replaced and the associated nozzle inner tees will be decontaminated to reduce the radiation level (see sec. 8.3). Steps will be taken to assure negative air pressure at the nozzle openings at the service and charge machine floor levels to prevent the spreading of fission product activity when either nozzle is opened to attach the welding or weld-cutting equipment. Shielding will be provided to protect personnel during the welding and cutting operations and during the through-tube withdrawal operation.

8.2.1. Through-Tube Welding Machine

The through-tube welding machine includes all components required to make the initial through-tube welds and the remote rewelds required each time the through-tube is replaced. It is designed to operate remotely from a control board located on the machine.

The following components are included as a part of the welding machine assembly: (1) torch head and positioner, (2) wire feed, reels, and controls, (3) transformer and controls, (4) varispeed drive and controls for the torch head, (5) gas and coolant supply, including regulators and controls, (6) viewing equipment to view position of the weld head prior to making the weld and to view the weld and position of the welding head after completion of the weld, (7) position turret and extension tool for insertion of the breech plug and adapter, (8) guides, lead screws, and elevating motor drives for raising and lowering the weld head and accessories inside the nozzle tee during welding, and (9) shielding to permit personnel to work at the welding machine control board and elsewhere in the service machine or charge machine rooms.

A roll-over dolly is provided for upending the machine after a weld has been made at the charge machine floor and prior to making a weld at the service machine floor. This equipment is not considered a part of the welding machine.

8.2.2. Through-Tube Weld-Cutting Machine

The through-tube weld-cutting machine is a machine especially designed to insert and withdraw the breech plug and the breech adapter. It is designed to operate remotely from a control board located on the machine.

The following components are included as a part of the machine assembly: (1) piloting and positioning collets to position the cutting head, (2) cutting heads and cutting head mandrels, (3) positioning

turrets and extension mandrels for removing the breech plug and breech adapter, (4) viewing equipment to view the position of the cutting head prior to cutting the weld and for viewing after finish machining of the weld area, (5) chip control brushes and vacuum system, (6) guides, lead screws, frame, and elevating motor drives and controls for raising and lowering the cutting head and accessories inside the nozzle during weld cutting, and (7) shielding to permit personnel to work at the cutting machine control board or elsewhere in the service machine or charge machine rooms.

A roll-over dolly is provided for upending the machine after the weld has been cut at the service machine floor level and prior to moving to the charge machine room. This equipment is not considered a part of the weld-cutting equipment.

8.2.3. Through-Tube Insertion and Welding

Single-Walled Through-Tubes. For the small experimental loops (TS-2 and TS-3) and the singly contained large loop (TL-1), the through-tube insertion and welding procedure is the same. The through-tube assembly is delivered to the EGCR site in a support fixture. The through-tube is removed from the fixture and positioned above the top nozzle. The bottom nozzle inner tee is raised to its upmost position using a positioning fixture. The through-tube is then lowered into position in the reactor, and the breech lock between the tube and the bottom inner tee is engaged by turning the tube by remote control. An expanding collet inside the tube is used to turn the tube. The positioning fixture is then removed, thereby permitting the bottom tee to be supported by the through-tube. The weight of the through-tube and the bottom inner tee is supported by a shoulder at the top of the through-tube and a mating shoulder in the top inner tee.

After completion of the through-tube insertion, the welding machine is positioned in the charge machine room to make the through-tube to bottom inner tee weld. Next, the welding machine inserts the bottom breech plug, locks it in place in the bottom inner tee, and makes the breech plug to inner tee weld, thus completing the bottom nozzle welding operations. The welding machine is then upended and transported to the service machine floor to make the through-tube to top inner tee weld, thereby completing the through-tube replacement operation.

Double-Walled Through-Tubes. For the large loop using a double-walled through-tube (TL-4), the procedure for insertion and welding is more complicated than for the other loops. In this case the outer through-tube and its expansion joint are delivered and positioned above the top nozzle as a complete assembly. The tube is inserted into the reactor and allowed to come to rest on a shoulder located at the top of the through-tube and a mating shoulder in the top outer tee. An adapter ring below the bellows assembly comes to rest on a shoulder in the bottom outer tee.

The through-tube assembly length is greater than the distance from the bottom nozzle shoulder to the top nozzle shoulder. Therefore, the bellows will be in compression from the weight of the through-tube. The outer through-tube to top outer tee weld is made. The welding machine is then upended and transported to the charge machine floor where the outer through-tube to bottom outer tee weld is made.

The bottom inner tee is next raised to its upmost position using a positioning fixture inside the nozzle. A breech adapter which provides a breech type of lock to the inner tee and to the inner through-tube is inserted from the charge machine room by the welding machine and locked to the bottom inner tee. The breech adapter is then welded to the inner tee.

Next, the inner through-tube is positioned above the top nozzle. It is lowered into the reactor and outer through-tube and allowed to bottom in the breech adapter. The breech lock in the inner tube is engaged in the breech adapter by using an expanding collet inside the tube to turn the tube. The positioning fixture inside the nozzle is then released, thereby suspending the through-tube and bottom inner tee from the shoulder at the top of the inner through-tube.

The inner through-tube to breech adapter weld is now made. Next, the remote-welding machine inserts the breech plug in the bottom inner tee and the breech plug to inner tee weld is made. The welding machine is then upended and transported to the service machine floor where the inner through-tube to top inner tee weld is made, thereby completing the double-walled through-tube installation.

8.2.4. Through-Tube Removal

The large loop using a double-walled through-tube (TL-4) will require more mechanical operations for removal than will the single-walled through-tube loops (TS-2, TS-3, and TL-1). The removal procedures described below are based on the use of a single weld-cutting machine to perform all operations necessary to remove through-tubes from either type of loop. The double-walled through-tube is used as an example because of the greater number of operations required.

Before attaching the weld-cutting machine to either the top or bottom nozzle, the shield plug in the respective nozzle is removed. The shield plug in the top nozzle is removed using the service machine. The shield plug in the bottom nozzle is removed using the charge machine.

In order to minimize the number of weld-cutting machine setups and moves, the inner through-tube weld at the top nozzle of loop TL-4 is the first weld to be removed. The machine is then transported from the service machine room to the charge machine room where it is attached to the bottom nozzle of loop TL-4, and the breech plug weld is removed. The breech plug is then withdrawn to permit access to the other welds to

be removed. Next, the inner through-tube to breech adapter weld is removed, thereby permitting the inner through-tube to be removed from the reactor. The breech adapter to inner tee weld is removed, thereby permitting removal of the breech adapter and providing access to the outer through-tube. The outer through-tube to bottom outer tee weld is then removed, thereby completing all cutting operations at the bottom nozzle.

Next, the cutting machine is upended and transported to the service machine floor to perform the last operation. After attaching the cutting machine to the top nozzle, the outer through-tube to top outer tee weld is removed, thereby permitting the removal of the outer through-tube and completing the through-tube removal operations.

8.2.5. Shielding

Prior to through-tube removal the tube will be decontaminated (see sec. 8.3). However, even after the decontamination, the dose rate will be too high to permit a man to work continuously at the service or charge machine floor level with the shield plug removed. Therefore, shielding of the welding and weld-cutting machines will be required. Since it is not possible to predict the decontamination efficiency for all conceivable contamination conditions, shielding for the welding and weld-cutting equipment will be based on the estimated activation of the through-tube and deposition of activity in the tube before decontamination.

The model used for calculating the dose rate at the service machine floor is shown in Fig. 8.2.1. The total dose rate at the dose point consists of gamma rays resulting from activation of the in-pile portion of the stainless steel through-tube plus gamma rays coming from deposited activity along the outlet portion of the through-tube of all equilibrium fission-product activity from an HGCR-1 type fuel element. The dose at the dose point due to activation, the dose due to deposited activity, and the total dose as a function of lead shielding thickness and time after shutdown are given in Table 8.2.1. The time selected for estimation of the operator dose was 48 hr after shutdown. The experiment stringer was assumed to have been removed.

The total dose that could be received was taken as 3 rem for a 13-week period, as listed in the ORNL Radiation Safety and Control Training Manual. Table 8.2.2 is an estimate of the exposure time required for the operator to perform the welding operations on TL-4.

The time required for the weld-cutting operation is approximately the same as that required for welding, therefore the welding machine operator and the weld-cutting machine operator will receive equal exposures. Table 8.2.3 gives the dose rate and total dose for a 50-hr exposure as a function of the lead shielding provided.

From Table 8.2.3 it appears that 6 in. of lead will be adequate. A reduction in shield thickness appears to be feasible only if the working exposure time of an operator can be reduced.

UNCLASSIFIED
ORNL-LR-DWG 59689

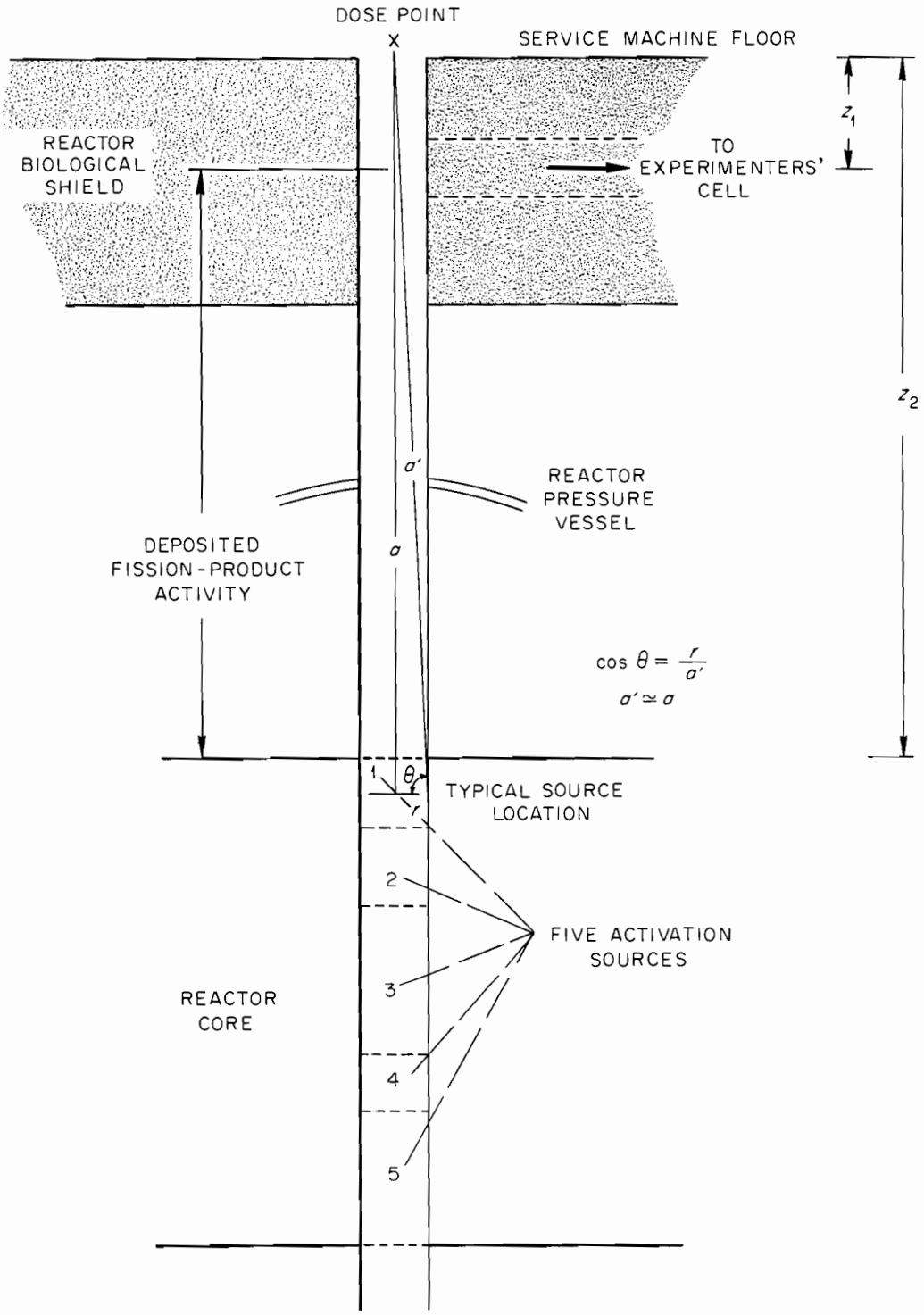

Fig. 8.2.1. Calculational Model for Dose Rate at Service Machine Floor.

Table 8.2.1. Dose Rates at Service Machine Floor Level as a Function of Time After Shutdown for Assumed Calculational Model

Shield Thickness (in. of Pb)	Time After Shutdown (hr)	Dose Rate (r/hr)		
		From Activation Source	From Deposited Fission Products	Total
2	0	0.1408	13.74	13.88
	6	38.8×10^{-3}	9.54	9.579
	12	22.65×10^{-3}	7.10	7.123
	24	17.86×10^{-3}	4.27	4.288
	48	17.65×10^{-3}	2.74	2.758
4	0	0.03057	1.24	1.271
	6	5.148×10^{-3}	0.8399	0.8450
	12	2.532×10^{-3}	0.6801	0.6826
	24	1.897×10^{-3}	0.4290	0.4309
	48	1.870×10^{-3}	0.2784	0.2803
5	0	7.775×10^{-3}	0.3891	0.3969
	6	1.775×10^{-3}	0.2776	0.2794
	12	0.8323×10^{-3}	0.2140	0.2148
	24	0.6041×10^{-3}	0.1356	0.1362
	48	0.5942×10^{-3}	0.08815	0.08874
6	0	2.273×10^{-3}	0.1231	0.1254
	6	0.6075×10^{-3}	0.08724	0.08785
	12	0.2730×10^{-3}	0.06715	0.06742
	24	0.1918×10^{-3}	0.04255	0.04274
	48	0.1884×10^{-3}	0.02766	0.02785
8	0	2.645×10^{-4}	0.01583	0.01609
	6	7.340×10^{-5}	0.01140	0.01147
	12	3.496×10^{-5}	0.008865	0.00890
	24	2.564×10^{-5}	0.005683	0.005709
	48	2.519×10^{-5}	0.003702	0.003727

Table 8.2.2. Estimated Operator Exposure Time During Welding Operations for Loop TL-4

Number and Description of Operations	Estimated Exposure Time (hr)
3 welding machine setups with a 6-hr exposure for each setup at service machine and charge machine floor	18
2 setups with a 4-hr exposure for each setup for welding and inspection at the service machine floor level (2 welds)	8
4 setups with a 6-hr exposure for each setup for welding, plug and adapter insertion, and inspection at charge machine floor (4 welds)	24
Total	50

Table 8.2.3. Estimated Operator Radiation Dose Received During Welding Operations for Loop TL-4

Lead Thickness (in.)	Dose Rate (r/hr of γ = rem/hr of γ)	Total 50-hr Dose (rem)
2	2.758×10^{-3}	137.9
4	0.2803×10^{-3}	14.02
5	0.08874×10^{-3}	4.44
5.5		~2.94
6	0.02785×10^{-3}	1.39

8.3. Decontamination

The EGCR experimental loops will be provided with a decontamination system capable of removing fission-product contamination from the inside surfaces of most of the loop piping and components. This system is required to reduce the radiation fields in the experimenters' cell and around the evaporative cooler and certain other components prior to performing direct maintenance. Decontamination of the through-tube is required so that the shielding needed during through-tube removal may be reduced. The equipment required to perform these functions includes a solution-makeup unit located in the experimenters' crane bay, piping and valving for transferring solutions from the makeup unit to the loop piping, and a special shield plug for insertion in the through-tube by the service machine.

8.3.1. Decontamination Reagents

The solution to be used for decontaminating all portions of the primary loop and auxiliary systems is 4% sodium oxalate–3% hydrogen peroxide in water. The pH of this solution is maintained between 4 and 5 by additions of oxalic acid to prevent solution decomposition. Ammonium oxalate is currently under test and will replace sodium oxalate in the solution unless serious detrimental properties are revealed.[1] The decontamination solution is prepared by mixing saturated solutions of sodium oxalate and oxalic acid with 30% hydrogen peroxide and demineralized water. The decontamination factors measured when type 347 stainless steel was treated with this solution at pH = 5 for 20 min at 95°C are given in Tables 8.3.1 and 8.3.2. To prevent stress corrosion cracking, the chloride content of the decontamination solution is maintained at less than 3 ppm by specifying a maximum chloride content of 0.002 wt % in each of the chemicals which make up the decontamination solution.

8.3.2. Equipment Description

Solution Makeup Equipment. The decontamination solution is made up in a unit consisting of a water demineralizer, reagent tanks, feed pumps, and associated piping, as shown in Fig. 8.3.1. This equipment is located in the same portion of the experimenters' crane bay as the CO_2 supply system. The demineralizer is a small mixed-bed regenerable ion exchanger with a service flow rate of 25 gpm.

Four tanks are required for preparing and holding the decontamination reagents. Two tanks, each designed to contain 300 gal, are required for preparing the saturated sodium oxalate solution. Another tank, designed to contain about 10 gal, is required for holding the saturated oxalic acid solution. A tank designed to contain 60 gal of 30% hydrogen peroxide is also required. These four tanks are covered

[1] A. B. Meservey, Criteria for the EGCR Loop Decontamination System (Code B.8.0), ORNL CF 60-11-7, November 3, 1960.

Table 8.3.1. Decontamination Factors with 4% Sodium Oxalate–3% Hydrogen Peroxide Solution[a]

Test material: type 347 stainless steel
Decontaminating time: 20 min
Solution pH: 5
Solution temperature: 95°C

Fission Products	Decontamination Factors
Zr^{95}–Nb^{95}	$>2 \times 10^4$
Ce^{144}–Pr^{144}	6×10^3
Y^{91}	3×10^4
Sr^{90}–Y^{90}	1×10^4
Ba^{140}–La^{140}	1×10^4
Mo^{99}	1×10^4
Ru^{106}–Rh^{106}	350

[a]A. B. Meservey, J. M. Chilton, and D. E. Ferguson, Decontamination of EGCR Charge and Service Machines, ORNL CF 60-10-46, October 13, 1960.

Table 8.3.2. Decontamination Factors for Prominent Nuclides with 4% Sodium Oxalate–3% Hydrogen Peroxide Solution[a]

Test material: type 347 stainless steel
Decontaminating time: 20 min
Solution pH: 5
Solution temperature: 95°C

	Decontamination Factors for			
	Total Gamma	Total Ruthenium	I^{131}	Ce^{141}
In experiment with Ce^{141}, Ru^{103}, and Ru^{106} as the predominant contaminants[b]	66	97	134	140
In experiment with I^{131}, Ru^{103}, and Ru^{106} as the predominant contaminants[b]	26	55	32	32[c]

[a]A. B. Meservey, Decontamination of EGCR Components, ORNL CF-60-12-37, December 9, 1960.

[b]The principal contaminants present in both experiments were Ce^{141}, Ru^{103}, Ru^{106}, and I^{131}.

[c]Value uncertain.

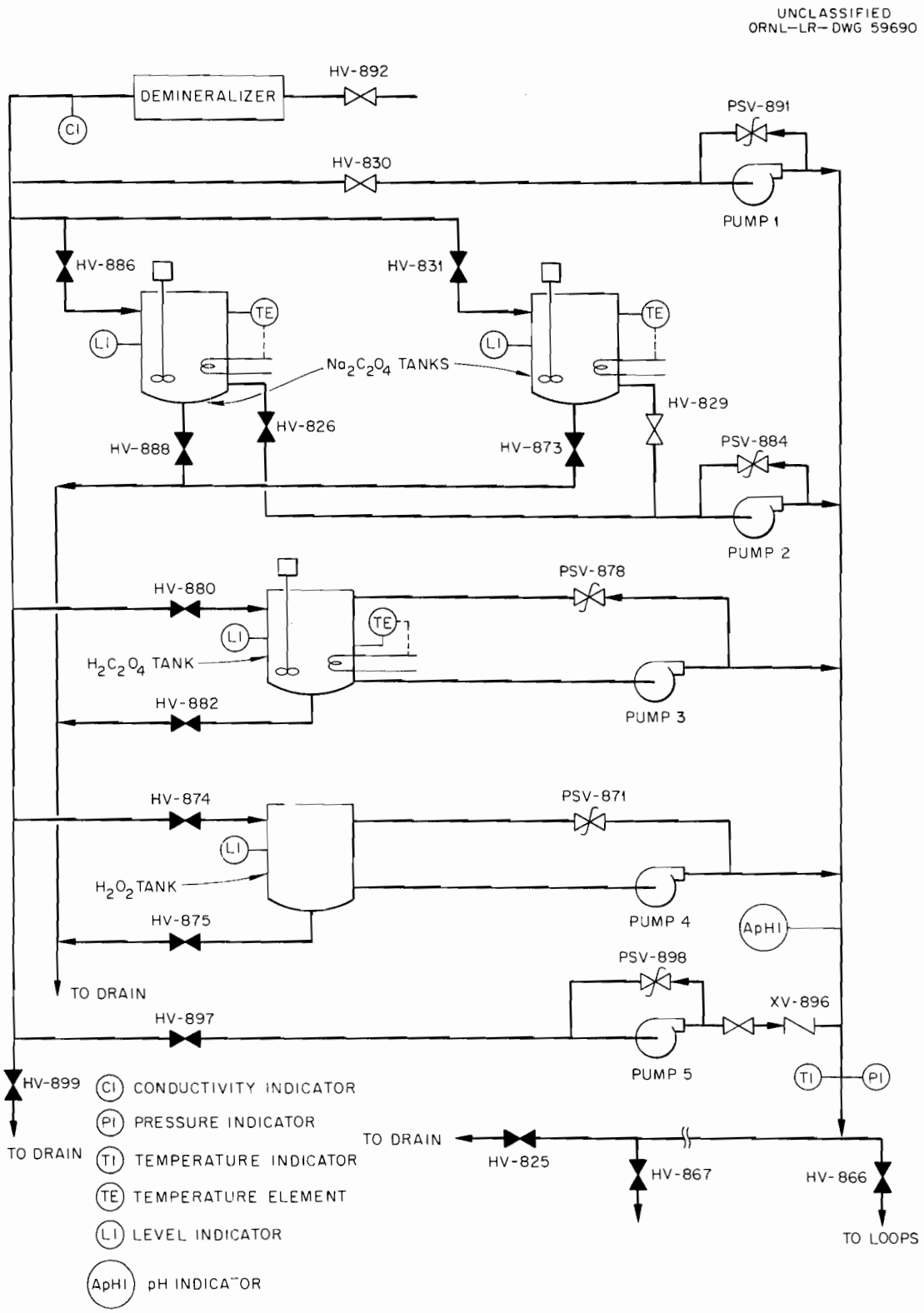

Fig. 8.3.1. Solution Makeup Unit.

with splash shields and are made of austenitic stainless steel. The three tanks which contain oxalate solutions are equipped with motor-driven agitators and electrical heaters.

Five pumps are required: four constant-displacement pumps of the piston type (Nos. 1-4) and a centrifugal pump (No. 5). The oxalic acid pump (No. 3) is equipped with a variable speed drive which permits varying the acid flow rate.

Expandable Shield Plug. The expandable shield plug is a device which prevents the decontamination solution in the top nozzle tee of the through-tube from flowing into the lower portion of the through-tube. This plug is similar to a standard shield plug except that it contains an expandable stopper. When in place, the stopper is expanded against the through-tube to form a water-tight seal. The upper portion of the plug contains sufficient shielding to permit operators to work in the service-machine room during the decontamination process. The shield plug contains an air vent to permit the air displaced by decontamination operations to pass freely into the experiment removal cooling system (see sec. 5.12).

Piping. The decontamination system piping is shown in Figs. 8.3.1 and 8.3.2. The piping which carries the reagents from the solution make-up unit to the loop is electrically heated. Check valves XV-864 and XV-865 prevent contaminated liquids from flowing back to the experimenters' crane bay in the event of equipment failure or valve mismanagement. All piping from the solution makeup unit enters the experimenters' cell via a penetration located between the cell and the experimenters' crane bay. All low points of the loop piping and equipment that require decontamination are equipped with drains and all high points are provided with vents. All drains used to drain decontamination solutions from the loop to the experimenters' cell drain are connected to a common header. This drain header (2-in. stainless steel pipe) transports the waste decontamination solutions from the loop to the liquid trap in the loop offgas system, where the liquid and gas are separated (see sec. 5.14). The liquid then passes to the experimenters' and auxiliary sump tank via the cell drain. The gas is released through the loop offgas system. All loop vents used during the decontamination operations are connected to the loop offgas system.

8.3.3. System Operation

For the purposes of decontamination, the primary loop and the secondary equipment and piping may be divided into four sections, each of which can be decontaminated separately. These sections are (1) the gas storage tanks, (2) the remaining in-cell piping and equipment which are permitted to be decontaminated, (3) the loop cooler, and (4) the reactor through-tube.

Two flow processes will be used for decontamination: fill-and-drain and once-through circulation. The through-tube and the cooler will be decontaminated by filling, holding filled for 20 min, and draining. All

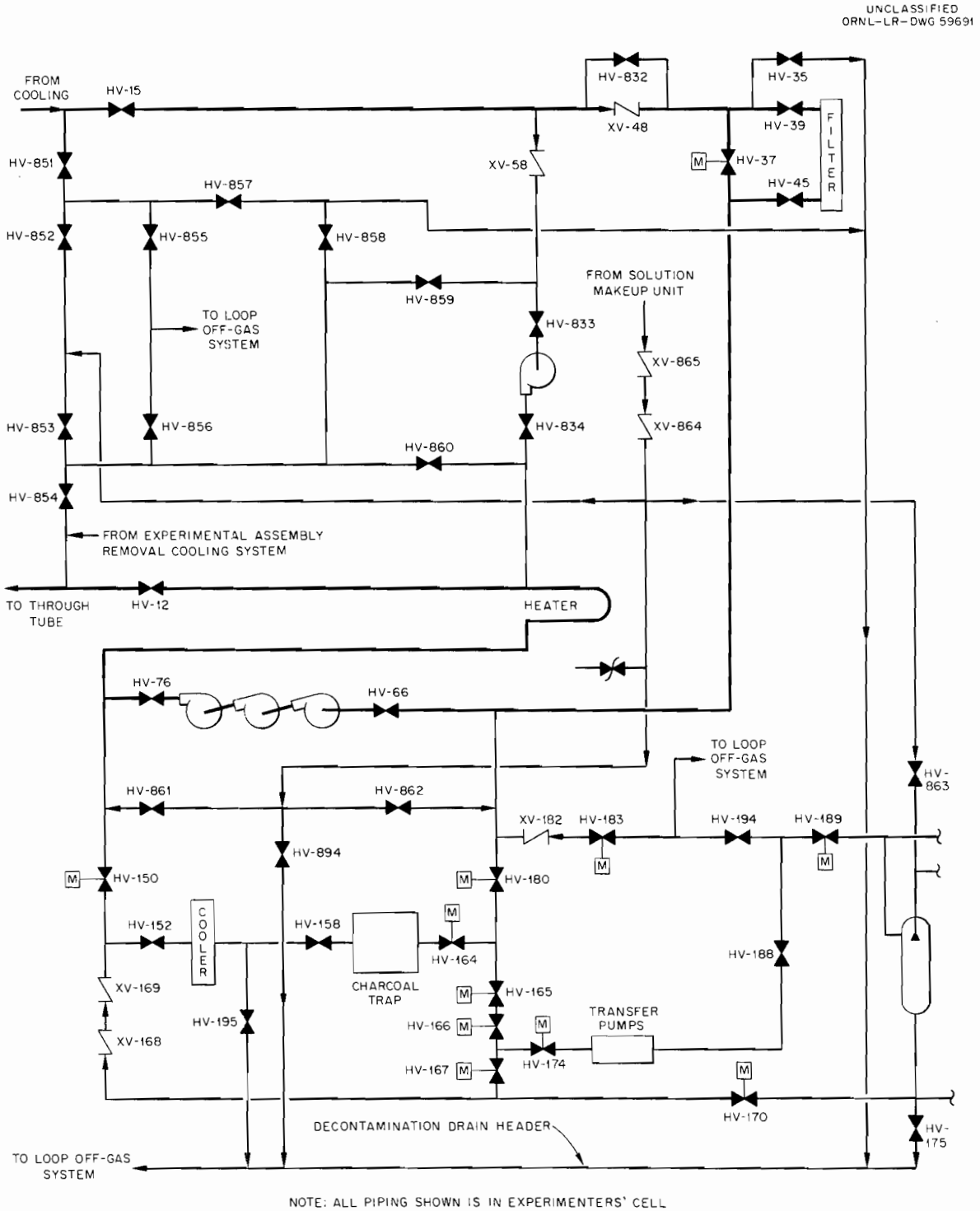

Fig. 8.3.2. Decontamination System.

other portions of the loop will be decontaminated by continuous once-through flushing or spraying with reagents until the desired decontamination is achieved or the reagents lose their decontamination effectiveness.

Prior to any decontamination operation, all gas in the experimental loop will be vented to the atmosphere via the loop offgas system and the loop will be purged with air. After the purging is completed, an operator will enter the experimenters' cell via a personnel airlock (see sec. 6.15) and perform any required manual valve manipulations. These manipulations will include closing the cell isolation valves (HV-12 and HV-15) and closing the valves which isolate equipment which cannot be decontaminated, such as the loop compressors (valves HV-66 and HV-76), the mainstream gas filter (valves HV-39 and HV-45), the auxiliary blower (valves HV-833 and HV-834), and the bypass gas-cleanup system charcoal trap (HV-158). Valve HV-164 and all other motor-operated valves are closed from the experimenters' control board. If any portion of the experimenters' cell is too contaminated to permit immediate access, long-handled reach rods will be used to perform the manual valving.

During all decontamination operations the portable probe of a scintillation spectrometer will be placed on the decontamination drain header for identification of major contaminants and for monitoring the rise and fall of gross gamma activity in the decontamination solution. This probe will permit the system operators to know when the decontamination process is no longer effective.

The decontamination system is designed so that during the decontamination operations secondary containment is maintained.

All water remaining in the loop after the decontamination operations and draining are completed will be removed by evacuating the system. The master vent valve will be closed and the loop will be evacuated by a vacuum pump located in the loop offgas system. All drain valves will be closed during this process. This procedure requires frequent or continuous processing of the vacuum pump oil to remove entrained water.

Reagent Makeup. Prior to starting decontamination, the reagents used to make up the decontamination solution are prepared. In each of the two sodium oxalate tanks, about 160 lb of sodium oxalate ($Na_2C_2O_4$) is added to about 300 gal of demineralized water. In the oxalic acid tank, about 100 lb of oxalic acid ($H_2C_2O_4 \cdot 2H_2O$) is added to about 10 gal of demineralized water. Both solutions are agitated and heated to about 180°F. While these reagents are being prepared, heated demineralized water will be pumped by pump No. 5 into that portion of the loop to be decontaminated. The water will be heated by electrical pipe heaters.

When the oxalate solutions have been prepared and the loop piping heated by the demineralized water, pump No. 5 will be stopped, the loop drained, and pumps 1, 2, 3, and 4 will be started. The flow rate of the oxalic acid will be adjusted so that the pH of the decontamination solution filling the loop will remain between 4 and 5.

After 30 min of loop filling, the first sodium oxalate tank will be exhausted. The second tank will be brought on line by opening valve HV-826 and closing valve HV-829. If necessary, the first tank can be recharged while the second tank is in use.

When decontamination of the loop is completed, the solution makeup apparatus will be drained and flushed. The tanks will be drained by opening valves HV-888, HV-873, HV-882, and HV-875 and will be flushed out with demineralized water by opening valves HV-886, HV-831, HV-880, and HV-874. The pumps and piping will be flushed by pumping demineralized water from the solution tanks, through the header, and out drain valve HV-825.

Gas Storage Tank Decontamination. Because of their large volume, the gas storage tanks will be decontaminated by use of sprays. Each tank contains a parasol spray nozzle (see sec. 5.3) capable of spraying the tanks with the decontamination solution at the rate of 2 gpm. To decontaminate the storage tanks, valves HV-863, HV-175, HV-189, and HV-194 will be opened and valves HV-852, HV-853, HV-861, HV-862, and HV-894 will be closed.

In-Cell Piping Decontamination. The in-cell piping will be decontaminated by passing the reagents through either valve HV-861 or HV-862. After the decontamination operations described below are completed, valve HV-894 and all other drain valves will be opened to permit draining and flushing with demineralized water.

To decontaminate that portion of the loop between the loop compressor isolation valve (HV-66), the cell inlet isolation valve (HV-15), and the auxiliary blower isolation valve (HV-833), valves HV-862, HV-832, HV-859, and HV-858 will be opened. The decontamination reagents will enter through valve HV-862 and will be discharged to the cell drain through valve HV-858. After decontamination of this portion of the loop is completed, the drain valves (HV-35 and HV-894) and the vent valve (HV-856) will be opened to permit draining.

To decontaminate the mainstream gas heater and the remaining primary loop piping in the cell, valves HV-861, HV-860, and HV-858 will be opened. Reagents will enter the loop through valve HV-861 and leave through valve HV-858. The piping will be drained by opening the drain valve (HV-894) and the vent valve (HV-856).

The secondary system piping will be decontaminated by opening valves HV-862, HV-180, HV-166, and HV-167, closing valve HV-37, and then performing the following valve manipulations. To decontaminate the bypass gas-cleanup system gas cooler and piping, valves HV-152 and HV-195 will be opened. Opening valves HV-174, HV-188, and HV-189 will permit the transfer pumps, the gas storage tanks top header, and the connecting piping to be decontaminated. Opening valves HV-170 and HV-175 will permit the gas storage tanks bottom header and connecting piping to be decontaminated.

Mainstream Gas Cooler Decontamination. Decontamination of the mainstream gas cooler will require use of the experimental assembly removal cooling system (see sec. 5.12) and the service machine, as well as the expandable shield plug. After the experimental loop is depressurized and swept with air, the service machine will be positioned over the through-tube nozzle, and the removal cooling system piping will be attached to the service machine. The service machine will then remove the shield plug already in the through-tube and insert the expandable shield plug. The shield plug will then be expanded to form a watertight seal at the top tee of the through-tube so that decontamination solutions cannot enter the lower portion of the through-tube. Valves HV-851, HV-852, HV-854, and HV-856 will be opened, and the decontamination solutions will be pumped into the mainstream gas cooler via the loop piping from the cell isolation valve to the cooler. When the cooler has been filled, valve HV-852 will be closed. After 20 min, valve HV-857 will be opened, and the spent solution will be drained. During the filling and draining operations, the cooler will be vented by the loop offgas system through valve HV-856 and the piping of the experiment removal cooling system.

Through-Tube Decontamination. To decontaminate the through-tube, valves HV-853 and HV-854 will be opened to admit the decontamination reagents. Valves HV-851 and HV-855 will be opened to allow the gas displaced by the liquid to be vented to the loop offgas system. After the through-tube is filled, valve HV-853 will be closed and the solution allowed to remain in the through-tube for 20 min. Valve HV-858 will then be opened and the through-tube drained. This procedure will be repeated as many times as necessary to reduce the radiation level of the through-tube to an acceptable limit. The final treatment will be a series of rinses with demineralized water. The water trapped in the through-tube bottom tee graphite cup will be removed by evacuating the loop.

8.3.4. Project References

Design Criteria (CF 61-6-3)

Decontamination System Design Criteria	Code B.8.0

Design Analyses (CF 61-6-4)

Decontamination System

Preliminary Design Drawings (CF 61-6-2)

Process Flowsheet, Decontamination System	D-RD-10116

8.4. Radioactive Waste Disposal

The radioactive wastes generated by operation of the EGCR experimental loops will be in the form of gases, liquids, and solids. The gaseous wastes will include contaminated loop gas and offgas from decontamination operations and sample-station operations. Disposal of these gases is described in Sections 5.14 and 6.7.

Radioactive liquid wastes will be produced during such operations as loop decontamination (see sec. 8.3) and cell washdown (see sec. 6.8). These wastes will drain into the reactor warm waste system. This system will also serve such areas as the experimenters' utility tunnel and reactor spent fuel storage basin.

Liquid waste from the experimenters' cell drain will flow by gravity into the 2000-gal experimenter and auxiliary sump tank of the warm waste system. The waste will then be pumped to a valve box from which it may be directed either to a holdup basin or an 8000-gal hot-waste-storage tank.

The solid wastes produced during operation and maintenance of the experimental loops will include contaminated equipment, clothing, and refuse. Materials such as equipment and clothing will receive a radiation survey. If contamination levels are sufficiently low, they will be decontaminated; otherwise, they will be buried. Wastes such as paper, plastic bags, etc., will be boxed in disposable cartons and buried.

8.5. In-Cell Maintenance

8.5.1. Introduction

The major factors that govern the in-cell piping and equipment layout are the following: (1) the maintenance philosophy to be followed, including the use of special tools and viewing equipment and the extent to which equipment will be removed instead of repaired in place (special closure requirements); (2) anticipated activity level of the equipment and the established personnel exposure limits; (3) decontamination procedures to be used and their effectiveness; (4) auxiliary shielding and shadow shielding requirements; (5) allowable piping stresses, including the changes due to creep or yielding during high-temperature operation and the shielding of supports; and (6) the cost of loop shutdown time.

The basic cell layout approach was to locate all major equipment that might require replacement under the experimenters' cell hatchway

openings (see sec. 3.2). This permits direct access to the equipment by the experimenters' crane and facilitates semiremote maintenance from the experimenters' crane-bay floor. Consideration was also given to expected equipment servicing requirements, life, and activity level.

8.5.2. Closures

One of the basic problems associated with the design of components and the layout of experimental loops is the method of attaching the various loop components to the loop piping. Five methods of making a closure can be considered: (1) mechanical, (2) mechanical plus a seal weld, (3) mechanical plus a braze weld,[2] (4) all welded (strength weld),[3] and (5) welding couplings (strength weld closures).[4]

At this time the development effort is concentrating on mechanical closures for the EGCR experimental loops. If the loop and its equipment become contaminated, the present plan is to use isolation valves to isolate the filter, charcoal beds, compressors, and piping that normally handle only uncontaminated gas and to decontaminate the remainder of the loop (see sec. 8.3). This leaves certain equipment, such as the compressors, contaminated. If direct maintenance of these items is not feasible, a method of remote replacement or repair is required. The type of closure selected then becomes an important consideration.

8.5.3. Major In-Cell Equipment

Mainstream Gas Filter. The mainstream gas filter is designed as a single welded unit with two 6-in. mechanical closures (see sec. 4.11). A steel framework is used for supporting and handling the filter vessel and its lead shielding. The framework and shielding are designed to permit removal of the shielding after the filter and shield have been removed to a burial ground. The filter vessel will be buried and the support and shielding decontaminated (if necessary) and reused. From a maintenance standpoint, this design has the advantage of eliminating

---

[2]The mechanical closure in this case uses a sealing ring of brazing material in narrow passages. A preformed high-temperature-melting (1200 to 1600°F) ring of brazing material is melted by using a high-frequency coil lowered around the flange.

[3]Perhaps the most advanced full-strength welding machine is one being developed by Welder Processes, Inc. This is the firm which was associated with the ORNL-HRP Program at one time and more recently with the PAR Project. PAR progress with respect to strength welding is reported in reports WCAP-1104 and 1105 "Layout and Maintenance Parts I and II – March 1959." Major problems still plaguing this method of joining pipe are adequate repair and inspection methods.

[4]If there are no objections to crevices in the major gas piping system, welding couplings (as manufactured by Tube Turns, Inc.) offer the advantage of minimizing the spread of active particles and the problem of cutting directly into a contaminated pipeline.

the transfer of the filter element alone, which would involve the use of special equipment and the risk of contaminating the experimenters' cell.

A nozzle alignment fixture and support adjustment feature are incorporated in the filter vessel design. The entire unit is mounted on a movable dolly that rides on tracks and is activated by a hydraulic cylinder. To remove the filter the two mechanical flanges will be broken (by using the special two-bolt electrically driven wrench discussed in sec. 4.11), special sealing plugs will be attached to the open filter nozzles to prevent the spread of radioactive particles, and the unit will be transported to the burial ground.

Loop Compressors. The set-of-three loop compressors is designed as a unit with one set of 6-in. closures (see sec. 4.11) to connect it to the loop. The compressors are stacked vertically (one above the other) to minimize space requirements, reduce maintenance (replacement) operations, and make possible the location of the assembly below the cell roof hatchway. The loop compressors are supported by a framework which also supports the associated piping and bypass check valves and acts as a handling device for the entire assembly. After failure of two compressors, a shutdown will be planned and the entire assembly will be replaced in a manner similar to the filter replacement procedure. The assembly will be transported to a "hot" shop facility where the maintenance operations will be performed.

Auxiliary Blower. The auxiliary blower is connected to the mainstream loop piping by a set of 6-in. mechanical closures. Since this is a large equipment item it will be located under the cell roof hatchway.

Mainstream Gas Heater. The mainstream gas heater is essentially a part of the mainstream piping, and therefore replacement will be a major operation.

Valves. Eight 6-in. mainstream isolation valves and one 4-in. filter bypass valve will be welded to the mainstream loop piping. They will be mounted in a manner which will permit access to the bonnet closure from above. An attempt will be made to locate all large valves under the cell hatchway.

8.5.4. Auxiliary In-Cell Equipment

Equipment such as the gas transfer pump, gas purification charcoal beds, and heater transformer will also be replaced by using semiremote tooling (direct maintenance, if possible) from the experimenters' crane-bay floor and utilizing the cell hatchway. Replacement of the six gas storage tanks located in the cell will be a major operation; however, they have a long life expectancy. When the radiation level permits, minor direct maintenance operations can be performed by utilizing the portable personnel air lock (see sec. 6.15).

INTERNAL DISTRIBUTION

1. S. E. Beall
2. M. Bender
3. A. L. Boch
4. C. J. Borkowski
5. W. F. Boudreau
6. R. B. Briggs
7. W. A. Bush
8. D. W. Cardwell
9. W. B. Cottrell
10. I. T. Dudley
11. E. P. Epler
12. W. F. Ferguson
13. J. Foster
14. A. P. Fraas
15. B. L. Greenstreet
16. A. G. Grindell
17. R. E. Helms
18-19. R. F. Hyland
20. O. H. Klepper
21. R. B. Korsmeyer
22. M. I. Lundin
23. R. N. Lyon
24. H. G. MacPherson
25. R. E. MacPherson
26. W. D. Manly
27. A. P. Marquardt
28. H. J. Metz
29-34. C. Michelson
35. A. J. Miller
36-37. E. C. Miller
38-49. F. H. Neill
50. A. M. Perry
51. C. E. Powell
52. C. A. Preskitt
53. T. H. Row
54. G. Samuels
55. H. W. Savage
56. A. W. Savolainen
57. C. L. Segaser
58. M. J. Skinner
59. I. Spiewak
60. E. Storto
61. J. A. Swartout
62. G. M. Tolson
63. D. B. Trauger
64. C. S. Walker
65. A. M. Weinberg
66-67. G. D. Whitman
68. C. E. Winters
69. H. C. Young
70. F. C. Zapp
71. J. Zasler
72-74. ORNL Y-12 Technical Library Document Reference Section
75-87. Laboratory Records Department
88-89. Central Research Library
90. Laboratory Records (LRD-RC)

EXTERNAL DISTRIBUTION

91. J. F. Coneybear, ASTRA, Inc.
92-93. D. F. Cope, ORO
94-101. W. R. Cooper, Tennessee Valley Authority
102-104. L. H. Jackson, ORO
105. H. M. Roth, ORO
106. L. C. Widdoes, Internuclear Co.
107-121. Division of Technical Information Extension (DTIE)