OAK RIDGE NATIONAL LABORATORY

operated by

UNION CARBIDE CORPORATION

for the

U.S. ATOMIC ENERGY COMMISSION

ORNL-TM-136

133

UNIT OPERATIONS SECTION MONTHLY PROGRESS REPORT

DECEMBER 1961

NOTICE

This document contains information of a preliminary nature and was prepared primarily for internal use at the Oak Ridge National Laboratory. It is subject to revision or correction and therefore does not represent a final report. The information is not to be abstracted, reprinted or otherwise given public dissemination without the approval of the ORNL patent branch, Legal and Information Control Department.

LEGAL NOTICE

This report was prepared as an account of Government sponsored work. Neither the United States, nor the Commission, nor any person acting on behalf of the Commission:

A. Makes any warranty or representation, expressed or implied, with respect to the accuracy, completeness, or usefulness of the information contained in this report, or that the use of any information, apparatus, method, or process disclosed in this report may not infringe privately owned rights; or

B. Assumes any liabilities with respect to the use of, or for damages resulting from the use of any information, apparatus, method, or process disclosed in this report.

As used in the above, "person acting on behalf of the Commission" includes any employee or contractor of the Commission, or employee of such contractor, to the extent that such employee or contractor of the Commission, or employee of such contractor prepares, disseminates, or provides access to, any information pursuant to his employment or contract with the Commission, or his employment with such contractor.

ORNL-TM-136

UNIT OPERATIONS SECTION MONTHLY PROGRESS REPORT

December 1961

CHEMICAL TECHNOLOGY DIVISION

M. E. Whatley

P. A. Haas
R. W. Horton
A. D. Ryon
J. C. Suddath
C. D. Watson

Date Issued

APR 10 1962

OAK RIDGE NATIONAL LABORATORY
Oak Ridge, Tennessee
Operated By
UNION CARBIDE CORPORATION
for the
U. S. Atomic Energy Commission

ABSTRACT

The height of transfer units in a 6-in.-ID foam-liquid column for isotopic exchange or stripping of Sr using Sr-89 tracer were 1.4 to 4.6 in. Denitration of $Th(NO_3)_4$ in an agitated trough to give thoria for dispersion into a sol is reproducible. The loading of UF_6 on a single layer of 1/8-in. right circular cylinders of NaF in the presence of a flowing UF_6-N_2 stream showed strong dependence on gas concentration in the range 0.58-8.0 mole % UF_6 and a weaker dependence on temperature in the range 25°-100°C. Eleven tests were made using simulated Darex, TBP-25, and TBP-25 with organic waste demonstrating the batch and continuous flowsheets with good stable control of the continuous evaporator.

CONTENTS

		Page
	Abstract	2
	Previous Reports in this Series for the Year 1961	4
	Summary	5
1.0	Chemical Engineering Research	6
2.0	Thorium Utilization Studies	13
3.0	Volatility	18
4.0	Waste Processing	23

Previous Reports in this Series for the Year 1961

January	ORNL CF 61-1-27
February	ORNL CF 61-2-65
March	ORNL CF 61-3-67
April	ORNL-TM-32
May	ORNL-TM-33
June	ORNL-TM-34
July	ORNL-TM-35
August	ORNL-TM-65
September	ORNL-TM-112
October	ORNL-TM-121
November	ORNL-TM-122

All previous reports in this series are listed in the June 1961 report, ORNL-TM-34, from the beginning, December 1954.

SUMMARY

1.0 CHEMICAL ENGINEERING RESEARCH

Foam Separation. The height of transfer units were determined in a 6-in.-ID foam-liquid column for isotopic exchange or stripping of Sr using Sr-89 tracer. Based on the liquid phase, these were 3.5 to 4.6 in. for 18 in. of countercurrent column with a stainless steel gas sparger. With a spinnerette sparger, they were 1.4 to 3.3 in. for 24 in. of countercurrent column. The relatively irregular bubble size and the resulting foam condensation and channeling with the sintered stainless steel sparger caused the difference. Some net transfer of Sr occurred for the isotopic exchange runs, but the Sr concentration gradients in the column were limited to factors of 1.6 to 8, as compared to 250-500 for Sr stripping runs.

2.0 THORIUM UTILIZATION STUDIES

Denitration of $Th(NO_3)_4$ in an agitated trough to give thoria for dispersion into a sol is reproducible. Varying temperatures of the steam atmosphere in the trough had little effect on the product N/Th ratio which was 0.137-0.145 for three runs of 135 min, and 0.066-0.68 for six runs of 180 min.

3.0 VOLATILITY

The loading of UF_6 on a single layer of 1/8-in. right circular cylinders of NaF in the presence of a flowing UF_6-N_2 stream was studied. A strong dependence on gas concentration in the range 0.58-8.0 mole % UF_6 and a weaker dependence on temperature in the range 25°-100°C was observed.

4.0 WASTE PROCESSING

The average filling rate to the pot calciner was found to decrease with increased filling time, which gave higher bulk densities of the calcined solids. Eleven tests were made using simulated Darex, TBP-25, and TBP-25 with organic type waste. Demonstrations of the batch and continuous flowsheets were made, with good stable control of the continuous evaporator. Filling rates of 8.6 to 19.4 liters/hr averaged over the filling period were demonstrated depending upon feed type, concentration, and filling period, with bulk densities ranging from 0.61 to 1.42 g/cm^3.

1.0 CHEMICAL ENGINEERING RESEARCH

1.1 Foam Separation - P. A. Haas, J. D. Sheppard

Continuous countercurrent operation of a 6-in.-ID foam-liquid column was continued to study the engineering variables which control column performance. From the results to date, it appears that the simple stripping of Sr from a liquid feed stream is a more practical system for column evaluation than the initially selected isotopic exchange of Sr-89 and inactive Sr. Therefore, the next series of runs will be for stripping of Sr with column length, liquid feed rate, gas/liquid volume ratio, and bubble size as independent variables. The initial run of this series has been made with 0, 10, and 20 cm column lengths, 500 cc/min of liquid feed, 1.2 gas/liquid volume ratio, and about 0.5 mm dia bubbles.

System Selection. Use of Sr and Sr-89 with a large excess of dodecylbenzenesulfonate surfactant to insure essentially 100% complexing of the Sr was selected as the most suitable system for engineering evaluation of foam columns (August 1961 Unit Operations Monthly Report). This system could be used for stripping or enrichment of Sr or for isotopic exchange of Sr-89 with natural Sr.

The isotopic exchange between natural Sr and Sr-89 was initially selected over stripping because:

1. The Sr concentration would be constant throughout the column giving a straight equilibrium line. The isotopic equilibrium expressed as (SR-89/Sr) liquid/(Sr-89/Sr) foam is a constant very near unity.

2. All chemical concentrations could, in theory, be held constant throughout the column thus avoiding any variations in distribution coefficients or foam properties because of chemical changes.

3. In order to limit the complexity of the system, Sr concentrations must be low enough to avoid significant amounts of uncomplexed Sr and high enough to avoid significant surface exchange or adsorption effects. These limits restrict the range practical for Sr enrichment or stripping. For isotopic exchange, however, any Sr concentration within this range may be used with any Sr-89/Sr ratio.

Experimental results have shown that the advantages of using Sr isotopic exchange were overestimated. The Sr distribution coefficient is approximately constant and the behavior of the Sr dodecylbenzenesulfonate complex [Sr $(DBS)_2$] does not change appreciably for Sr concentrations from 2×10^{-6} M down to very low values ($\geq 10^{-9}$ M) in 10^{-3} M NaOH and $3 - 10 \times 10^{-4}$ M NaDBS. The effects of Sr concentrations on foam properties and the effects of Sr complexing or adsorption over this range are not excessive. Therefore, it is practical to use Sr stripping with Sr concentration variations of at least 10^3 and still have a straight equilibrium line.

The difficulty of obtaining isotopic exchange without any net transfer of Sr was not fully appreciated. Any errors in the gas flow rate, liquid flow rate, foam surface per cc, or Sr distribution coefficient result in a combination of Sr stripping and isotopic exchange. The existance of such errors could be checked if the total Sr concentrations in the column exit streams were measured. Since NaDBS and $Sr(DBS)_2$ have approximately equal surface/solution distribution coefficients and the $(DBS)_{liquid}/(DBS)_{foam}$ concentration ratio is easily measured by ultraviolet absorption, this ratio was initially assumed to be a measure of $(Sr)_{liquid}/(Sr)_{foam}$ concentration ratios. However, the sodium dodecylbenzenesulfonate is mostly ionized in solution so that the amount present as NaDBS is small. Therefore, the slope of the operating line for isotopic exchange cannot be checked from the run analyses (routine accurate chemical analyses for < 1 ppm Sr do not appear practical) and must be calculated.

Future countercurrent column tests will be treated simply as stripping of Sr-89 from a liquid feed to the top of the column. Feed of surfactant and/or natural Sr to the bottom of the column may be used to hold the chemical concentrations more constant, but will not be intended to avoid all net transfer of Sr between phases.

Nomenclature. The nomenclature used for the calculations and tabulations are as follows with the units used in brackets:

a is surface area per unit volume of gas [sq cm/cm^3]

x is liquid concentration [cpm/cc]

y is surface concentration [cpm/sq cm]

z is length of countercurrent contact [in.]

L is liquid flow rate [cc/min]

V is surface flow rate [sq cm/min]

E is liquid volume of condensed foam; i.e. the liquid going up the column with the foam [cc/min]

The subscripts used to designate these quantities at various points in the column are shown on the following sketch.

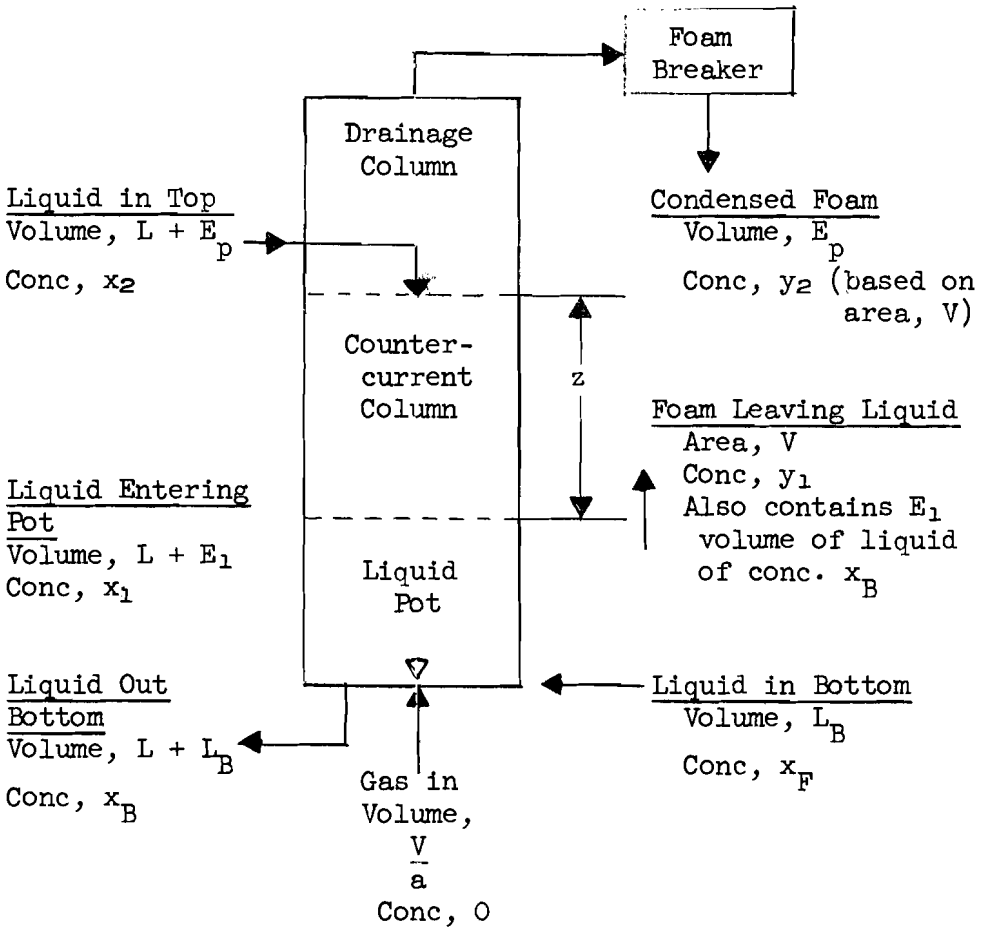

L is the net liquid flow down the column

Starred concentrations (x_1*, y_1*, x_B*, etc.) are the concentrations which would be in equilibrium with the other phase at that point, $x_1^* = y_1/(\Gamma/c)$, $y_1^* = x_1(\Gamma/c)$. The quantity defined as Γ/c during studies of the chemistry of foam liquid systems is the equilibrium distribution coefficient, $\alpha = (y/x)^*$ of conventional engineering nomenclature.

Note that L_B was 0 for the Sr stripping runs.

Sr Stripping Results. The foam column operating conditions are selected to give a straight equilibrium line and the operating line will be straight if foam condensation does not occur. For these conditions, the relationships for the number of transfer units and height of a transfer unit at the low concentrations in a foam column become:

$$N_y = \int_{y_1}^{y_2} \frac{dy}{y^* - y} = \frac{y_2 - y_1}{(y^* - y)_{lm}}$$

$$N_x = \int_{x_1}^{x_2} \frac{dx}{x - x^*} = \frac{x_2 - x_1}{(x - x^*)_{lm}}$$

$$N_y = \frac{L}{(\Gamma/c)V} N_x$$

$$HTU_y = \left(\frac{\Gamma}{c}\right)\left(\frac{V}{L}\right) HTU_x$$

where $(y^* - y)_{lm}$ and $(x - x^*)_{lm}$ are log mean driving forces.

The Sr concentrations are most conveniently expressed as cpm/cc or cpm/sq cm; these may be converted to other units by use of the feed liquid cpm/cc and Sr molarity.

The least accurately known quantities for the calculations of N_y or N_x are the values of Γ/c and V which are necessary to determine y_2 and x_2^* since y_2 is not measured directly. The effects of these quantities on N_x are small when the operating and equilibrium line pinch at the bottom of the column since the more accurately known liquid pot concentrations control the values of N_x. The effect of foam condensation would be to decrease the value of V as the foam passes up the column. The effect of the loss of tracer activity in the column would not be significant if the percentage losses from each phase were equal, but would affect the HTU values if the loss is preferential from one phase.

Data from three runs with no liquid or Sr feed to the bottom of the column give HTU_x values (height of transfer unit based on the overall liquid phase coefficient) of 1.4 to 4.6 in. The values of 4.6 in. for run 13B and 2.8 in. for 14A are relatively insensitive to the uncertainty in the values of Γ/c and a. The difference would be expected due to the irregular foam bubble size from the stainless steel sparger used for run 13B as compared to the uniform foam from the spinnerette used for run 14A. Both of these runs "pinch" at the bottom while 14E may pinch at the top or the bottom, depending on the values of Γ/c and a used.

Table 1.1 is organized to show the need for and effects of the values of Γ/c and a. Values down through the table through inlet Sr-89 activities are relatively accurately known. Values of y_2 must be calculated using values of a, the gas rate, and the foam Sr rate from either gross β material balances or the Sr-89 in condensed foam samples. The gross β balances were 94% for 13B, 65% for 14A and about 70% for 14E. Calculation of the values of x_2^* requires use of values for Γ/c. However, the values of N_x are insensitive to the values of a and Γ/c for runs 13B and 14A since $x_2 - x_B$ is not dependent on them, $x_2 - x_1$ is relatively insensitive to them, and the values of $(x - x^*)_{lm}$ are controlled by the values of x_B.

Isotopic Exchange Results. For all the runs with exchange of Sr-89 and inactive Sr, the Sr-89 transfer was both by stripping and by exchange. The analyses of results can be done the same way as for stripping alone

Table 1.1. Foam Column HTU_x Values for Sr Stripping

Liquid: 10^{-3} M NaOH plus $Sr(OH)_2$ and Trepolate F-95 surfactant estimated to be 384 g per g mole of dodecylbenzenesulfonate.

Foam: Water pumped N_2 scrubbed with 0.2 M NaOH in a packed column; sintered stainless steel sparger for 13B, spinnerette for 14A and 14E.

Quantity	Symbol	Unit	Run 13B	Run 14A	Run 14E	
Liquid rate in	$L + E_p$	cc/min	250	500	500	
Gas rate	V/a	cc/min	2100	1200	600	
Condensed foam rate	E_p	cc/min	15	5	1	
Net liquid rate	L	cc/min	235	495	499	
Liquid surf. conc. in	-	ppm	250	274	274	
Liquid surf. conc. out	-	ppm	191	242	253	
Liquid Sr conc. in	-	10^{-6} M	3.80	4.66	4.66	
Liquid Sr-89 activity in[a]	x_2	cpm/cc	1750	4550	4550	
Liquid Sr-89 activity out[a]	x_B (also x_1*)	cpm/cc	7.4	8.5	55	
Surface Sr-89 activity in	y_B	cpm/sq cm	0	0	0	
Liquid in equil. with y_B	x_B*	cpm/sq cm	0	0	0	
Estimated surf. area	a	sq cm/cc	100	120	120	120
Assumed Sr dist. coef.	Γ/c	cm	8×10^{-3}	8×10^{-3}	8×10^{-3}	10^{-2}
Phase flow ratio	$(\Gamma/c)(V/L)$	dimensionless	7.1	2.3	1.16	1.43
Surface Sr-89 activity out[b]	y_2	cpm/sq cm	2.07[b]	15.8[b]	31.2[b]	31.2[b]
Liquid in equil. with y_2	x_2*	cpm/cc	258	1980	3910	3120
Liquid entering pot	x_1	cpm/cc	60	28	119	134
(Calculated number of	$x_2 - x_B$	cpm/cc	1740	4540	4495	4495
transfer units including	$(x - x^*)_{lm}$	cpm/cc	280	448	238	422
liquid pot)	N_x	-	6.2	10.1	18.9	10.6
(Calculated number of	$x_2 - x_1$	cpm/cc	1690	4520	4430	4420
transfer units; liquid pot	$(x - x^*)_{lm}$	cpm/cc	430	517	250	465
of one theoretical stage)	N_x	-	3.9	8.7	17.7	9.5
Countercurrent length	z	in.	18	24	24	24
Height of transfer unit	HTU_x	in.	4.6	2.8	1.4	2.5

[a] The counts reported are for 14 days after run 13 and 27 days after run 14 to permit Y-90 to approach equilibrium with Sr-90 in tracer.

[b] The y_2 values are calculated assuming 100% gross β material balance.

by recognizing that the liquid to surface distribution coefficient exists for each Sr isotope. For a given system of specified concentrations, the distribution coefficients for the various isotopes are essentially equal and the same as that for total Sr. The straight operating and equilibrium lines permit use of the same equations used to calculate N_x for the Sr stripping runs.

The HTU_x values for runs with isotopic exchange were 3.5 and 4.3 in. for runs with the stainless steel sparger and 1.9 to 3.3 in. for runs with the spinnerette (Table 1.2). If a larger value of Γ/c for the Sr-89 was used, the values for HTU_x would increase, particularly the value for run 14D.

Sr concentrations for the liquid pot were calculated from material balances (Table 1.2). The liquid entering the pot from the column was assumed in approximate equilibrium with the foam leaving with respect to total Sr concentrations. Then the liquid Sr concentrations for streams leaving the liquid pot were calculated to be 0.27 to 1.55 x 10^{-6} M Sr. While the Sr liquid concentrations throughout the column varied by factors of from 1.6 to 8 for these exchange runs, this variation was much smaller than the variations of from 250 to 500 during the stripping runs (Table 1.1). The surfactant concentrations were also held more constant during the exchange runs because the surfactant for the foam surface was supplied by the bottom feed liquid.

Conclusions. Foam column operating conditions cannot be selected precisely enough to give isotopic exchange of Sr-89 and inactive Sr without any net transfer of Sr between phases. However, Sr liquid concentrations can be maintained constant within a factor of two for Sr exchange as compared to factors of 250 or more for Sr stripping. The heights of transfer units based on the liquid phase (HTU_x) were calculated to be 3.5 to 4.6 in. for 18 in. of countercurrent column with a stainless steel gas sparger and 1.4 to 3.3 in. for 24 in. of countercurrent column with a spinnerette sparger. The difference between the two spargers is probably real and due to the irregular bubble size and the resulting foam condensation and channeling with the sintered stainless steel sparger. The accuracy of the HTU_x values is not good because of the uncertainty of the equilibrium curve, the uncertainty of the surface area per unit volume of foam (a), and the low tracer activity in the exit liquid.

Table 1.2. Foam Column HTU_x Values for Sr Isotopic Exchange

Liquid: 10^{-3} M NaOH plus $Sr(OH)_2$ and Trepolate F-95 surfactant estimated to be 384 g per g mole of dodecylbenzenesulfonate.

Foam: Water pumped N_2 scrubbed with 0.2 M NaOH in a packed column; sintered stainless steel sparger for 13D, 13E, spinnerette for 14B, 14C, and 14D.

Quantity	Symbol	Units	Run 13D	Run 13E	Run 14B	Run 14C	Run 14D
Liquid rate in top	$L + E_p$	cc/min	225	452	452	452	452
Gas rate	V/a	cc/min	1800	1800	1200	800	600
Liquid rate in bottom	L_B	cc/min	25	48	48	48	48
Condensed foam rate	E_p	cc/min	8	10	6	2	1
Net liquid rate	L	cc/min	217	442	446	450	451
Liquid rate out bottom	$L + L_B$	cc/min	242	490	494	498	499
Liquid surf. conc. in top	-	ppm	227	227	250	250	250
Liquid surf. conc. in bottom	-	ppm	460	460	500	500	500
Liquid surf. conc. out bottom	-	ppm	209	228	250	247	255
Surf. rate in cond. foam	-	mg/min	2.7	11.8	7.7	6.6	4.1
Surf. material balance	-	%	86	100	96	95	96
Liquid Sr conc. in top	-	10^{-6} M	2	2	2.5	2.5	2.5
Liquid Sr-89 conc. in top[a]	x_2	cpm/cc	1950	1950	5020	5020	5020
Liquid Sr conc. in bottom	-	10^{-6} M	20	20	25	25	25
Liquid Sr-89 conc. in bottom	y_B	cpm/sq cm	0	0.	0	0.	0.
Liquid Sr-89 conc. out[a]	x_B (also x_1*)	cpm/cc	5.4	6.9	7.4	8.4	10.1
Estimated surface area	a	sq cm/cc	100	100	120	120	120
Assumed Sr dist. coef.	Γ/c	cm	10^{-2}	10^{-2}	10^{-2}	10^{-2}	10^{-2}
Phase flow ratio	$(\Gamma/c)(V/L)$	dimensionless	8.3	4.1	3.2	2.1	1.60
Sr in foam leaving liquid	-	μ moles/min	0.49	0.93	1.16	1.14	1.12
Sr in net liquid flow	-	μ moles/min	0.059	0.217	0.362	0.545	0.700
Liquid Sr conc. out	-	10^{-6} M	0.27	0.49	0.81	1.21	1.55
Sr-89 in	$(L + E_p)x_2$	10^3 cpm/min	439	881	2270	2270	2270
Liquid Sr-89 out	$(L + L_B)x_B$	10^3 cpm/min	1.31	3.38	3.65	4.18	5.04
Surface Sr-89 conc. out[b]	y_2	cpm/cm^2	2.44[b]	4.88[b]	15.7[b]	23.6[b]	31.4[b]
Liquid in equil. with y_2	x_2*	cpm/cc	244	488	1570	2360	3140
Liquid in equil. with y_B	x_B*	cpm/cc	0	0	0	0	0
Liquid column to pot	x_1	cpm/cc	51	36	32	27	27
(Calculated number of	$x_2 - x_B$	cpm/cc	1945	1943	5013	5012	5010
transfer units including	$(x - x^*)_{lm}$	cpm/cc	296	272	560	460	358
liquid pot)	N_x	-	6.6	7.2	9.0	10.9	14.0
(Calculated number of	$x_2 - x_1$	cpm/cc	1899	1914	4988	4993	4993
transfer units; liquid	$(x - x^*)_{lnm}$	cpm/cc	458	370	693	531	397
pot of one theoretical stage)	N_x	-	4.2	5.2	7.2	9.4	12.5
Countercurrent length	z	in.	18	18	24	24	24
Height of transfer unit	HTU_x	in.	4.3	3.5	3.3	2.6	1.9
(Value of a to foam breaker if Γ_{DBS} = 3.2×10^{-10})	a	sq cm/cc	12	53	52	67	56

[a] These counts were delayed (14 days for run 13, 27 days for run 14) to permit Y-90 to approach equilibrium with Sr-90 in the tracer.

[b] The y_2 values were calculated assuming a 100% gross β material balance.

2.0 THORIUM UTILIZATION STUDIES

P. A. Haas

This program is to develop chemical processing and fuel fabrication techniques for thorium which will simplify its use as a reactor fertile material. The immediate objective is to develop to the pilot plant stage the application of the sol-gel and vibratory compaction processes to give clad oxide fuel elements. Studies include: denitration of $Th(NO_3)_4$ in steam atmospheres followed by dispersion into thoria sols, uranium addition, drying, calcination, and reduction to give high density ThO_2-UO_2 particles. Test elements of vibratorily compacted mixed oxides are being fabricated or irradiated.

2.1 Thorium Nitrate Denitration Studies - J. W. Snider, R. D. Arthur, D. A. McWhirter, J. D. Sheppard

The effects of varying steam temperature, time of operation with steam, and time of operation with air were studied with the agitated trough calciner. The reproducibility of the N/Th ratio from batch to batch under the same run conditions was also checked.

Runs 25, 26, and 48 (Table 2.1) were made to determine the reproducibility of the N/Th ratio for fixed run times of 135 min, but with varying steam inlet temperatures. Runs 25 and 26 had a steam inlet temperature of 425°C. Run 48 had a steam inlet temperature of 260°C (Figure 2.1). The N/Th ratios were: run 25 - 0.147, run 26 - 0.137, and run 48 - 0.145. This represents an appreciable temperature difference in steam inlet temperature with no effect on the N/Th ratio of the product. It should be noted, as reported earlier, that only a small fraction of the total heat input is supplied by the steam. This is evident by the off-gas temperature from the agitated trough remaining constant at both inlet steam temperatures. The trough skin temperature for run 48 was 25°C higher than for the other two runs.

Runs 31, 32, 33, and 34 had a steam inlet temperature of 425°C while run 35 had a steam inlet temperature of 250°C; the run times were 180 min (Table 2.2). The N/Th ratios were 0.066 for runs 31 through 34 and 0.068 for run 35. Control of the N/Th ratio was good for this series of runs.

Run 38 duplicated 35 except for an additional 25 min running time. The N/Th ratio was reduced from 0.068 to 0.064.

Runs 50, 54, 55, and 56 (Table 2.3) used both steam at 250°C and air for the low N/Th regions. The run time was 180 min in steam and 180 min in air. The trough skin temperature was 25°C higher than for the 31-35 series. The N/Th ratios were: run 50 - 0.042, run 54 - 0.035, run 55 - 0.046, and run 56 - 0.044. Control of the N/Th ratio was good for this series of runs.

Table 2.1. The Effect of Inlet Steam Temperature on the N/Th Ratio Using the Agitated Trough Calciner

	Run 25	Run 26	Run 48
Run Time, min	135	135	135
Skin Temp., °C	410	410	435
Steam Temp., °C	425	425	260
Off-gas Temp., °C	260	260	260
Steam Rate, lb/hr	7.8	7.8	8
LOI - (300-1000°C), %	4.52	4.40	4.03
N, %	0.75	0.70	0.74
N/Th, Atomic Ratio	0.147	0.137	0.145

Table 2.2. Reproducibility of the N/Th Ratio for Fixed Run Times Using the Agitated Trough Calciner

	Run 31	Run 32	Run 33	Run 34	Run 35	Run 38
Run Time, min	180	180	180	180	180	210
Skin Temp., °C	425	425	425	425	425	425
Steam Temp., °C	425	425	425	425	250	265
Off-gas Temp., °C	260	260	260	260	260	260
Steam Rates, lb/hr	8	8	8	8	8	8
LOI - (300-1000°C), %	3.32	3.31	3.29	3.27	3.00	2.88
N, %	0.34	0.34	0.34	0.34	0.35	0.33
N/Th, Atomic Ratio	0.066	0.066	0.066	0.066	0.068	0.064

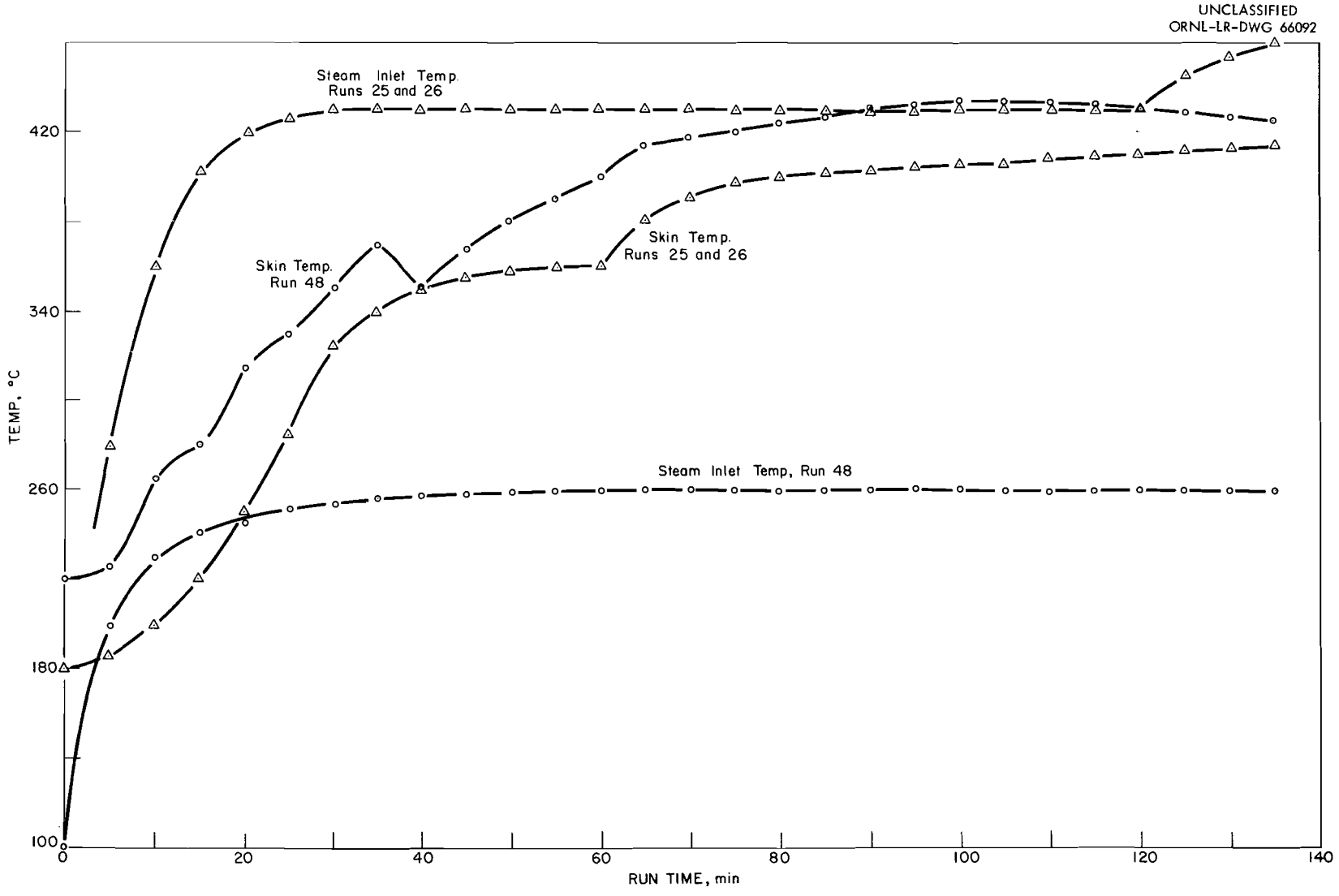

Fig. 2.1. Temperature profile of Runs 25, 26 and 48.

Table 2.3. Reproducibility of the N/Th Ratio for Fixed Run Times in Steam and Air using the Agitated Trough Calciner

	Run 50	Run 54	Run 55	Run 56
Run Time with Steam, min	180	180	180	180
Run Time with Air, min	180	180	180	180
Skin Temp., °C	475	475	475	475
Steam Temp., °C	260	260	260	260
Off-gas Temp., °C	260	260	260	260
Steam Rate, lb/hr	8	8	8	8
Air Rate, SCFM	1/3	1/3	1/3	1/3
LOI - (300-100°C), %	2.21	2.25	2.44	2.42
N, %	0.22	0.18	0.24	0.23
N/Th, Atomic Ratio	0.042	0.035	0.046	0.044

A series of runs - 41, 42, 43, and 44 - were made using air at 0.33 SCFM for varying lengths of time after steam stripping to a N/Th ratio of 0.066. The temperature during air purging was ~450°C. An equilibrium N/Th ratio of 0.035 was approached after 4 hr in air (Figure 2.2). Steam stripping to a lower ratio prior to air injection is also shown to effect the equilibrium value only slightly.

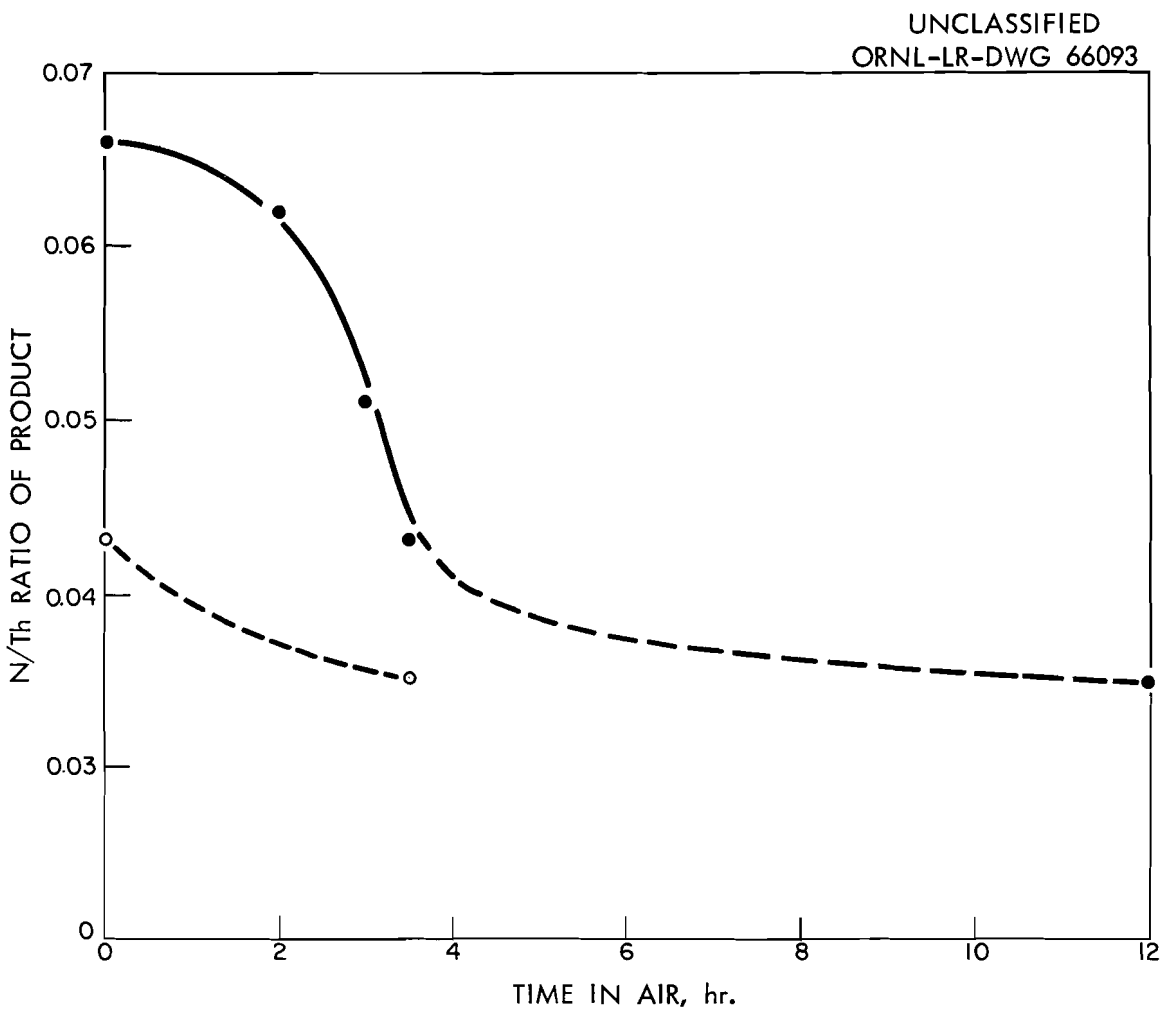

Fig. 2.2. N/Th ratio of the product versus time in air at 450°C in the agitated trough calciner after the steam denitration step.

3.0 VOLATILITY

R. W. Horton

3.1 UF_6 Sorption Studies - L. E. McNeese

Determination of the factors which control the removal of UF_6 from a flowing gas stream by a fixed bed of NaF has been the subject of a number of recent studies. In a previous report (September 1961 Unit Operations Monthly Report), discussion was given of a physical model which explained the observed characteristics of the sorption process. An equation based on the model was derived from which the loading on a single pellet could be calculated. To provide data for a check of this model, a series of runs were made showing UF_6 loading on a single layer of NaF pellets through which a N_2-UF_6 stream was flowing. In a given series, temperature, gas concentration, and gas flow rate were held constant. The loading after a definite time was established by weight gain of the bed.

Experimental Equipment and Procedure. The runs were made using a bed of NaF having approximately 5-in. of 3-mm glass beads above and below the bed. The beads and NaF pellets were conditioned with F_2 at 400°C for 1 hr prior to use. A schematic diagram of the bed is shown in Figure 3.1.

The bed was placed in an oil bath which was controlled to within 0.1°C of the desired temperature. One hour was allowed for the bed to come to the temperature of the bath. The inlet gases were heated prior to entering the bed by a 50 ft long coil of 3/8-in. copper tubing contained in the oil bath. To start a run, the N_2 rate through the bed was set using a wet test meter. The UF_6 was bypassed around the bed while the flow rate was set. The UF_6 flow rate was determined by measuring the pressure drop across a calibrated capillary and was checked after the run by weight gain of the bed and of a NaF trap downstream of the bed.

Prior to starting a run, the UF_6 and N_2 flow rates were set and the stream was allowed to flow through the preheater coil for approximately 5 min in order to establish a constant concentration in the coil. During this period, the stream was bypassed around the bed. A run was started by manually diverting the stream through the bed. Gas was passed through the bed for a prescribed time after which the gas was again manually bypassed around the bed. Approximately 10 sec were required for effecting the necessary changes in valving. The N_2 flow was continued through the preheater coil for approximately 2 min to free the coil of UF_6. A N_2 flow was then passed through the bed for 1 min to free the bed of unreacted UF_6. The bed was allowed to cool and was removed for weighing.

A N_2 flow rate of 0.129 g moles/min was used for all runs. Bath temperatures of 25°, 50°, and 100°C were used with UF_6 concentrations of 0.58 mole %, 2.5 mole %, and 8.0 mole %. Loading time was varied between 3 and 60 min.

Experimental Results. Results of the runs are shown in Figures 3.2 and 3.3. The effect of variation of temperature is shown in Figure 3.2.

UNCLASSIFIED
ORNL-LR-DWG 66094

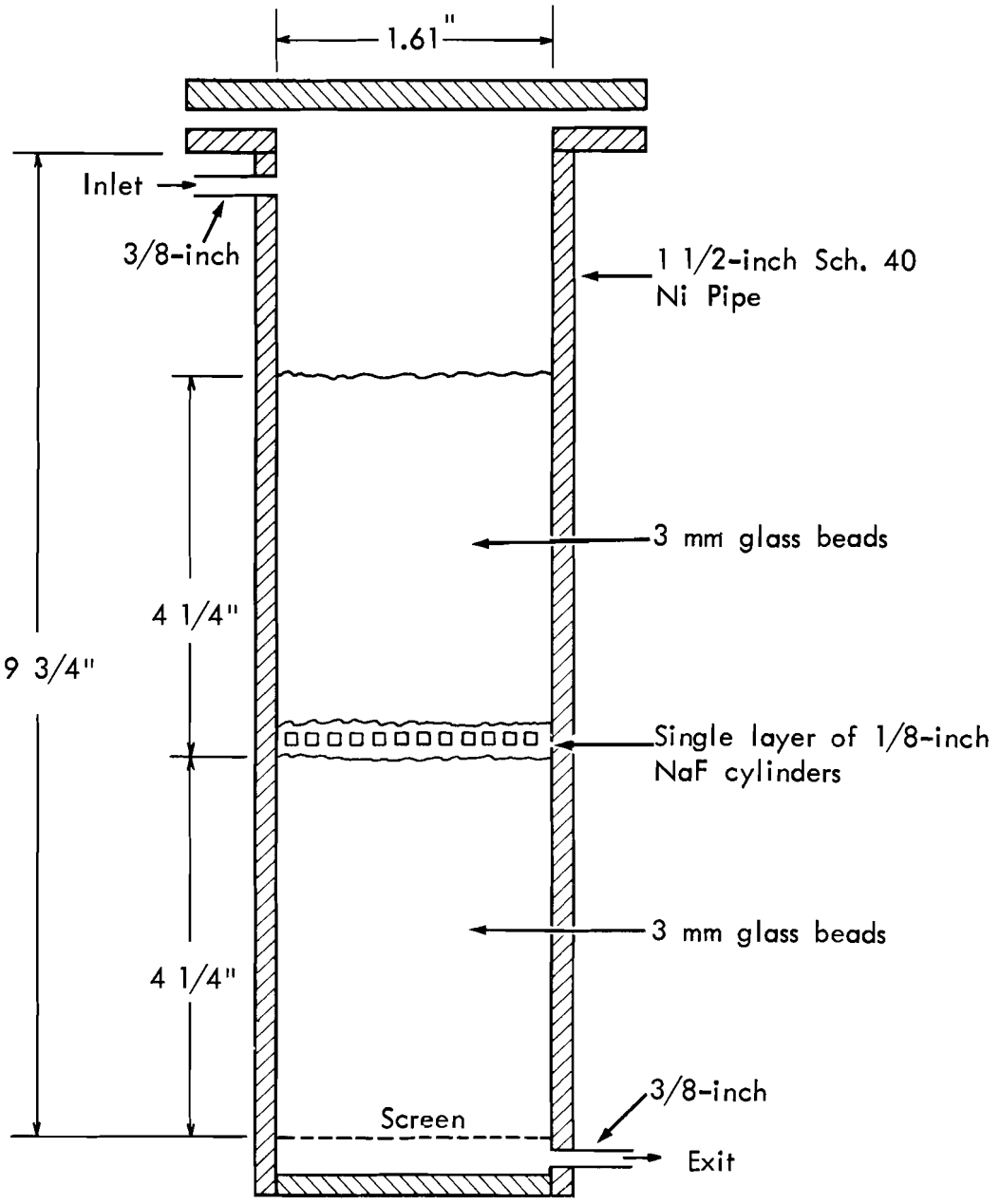

Fig. 3.1. Single layer sorption bed.

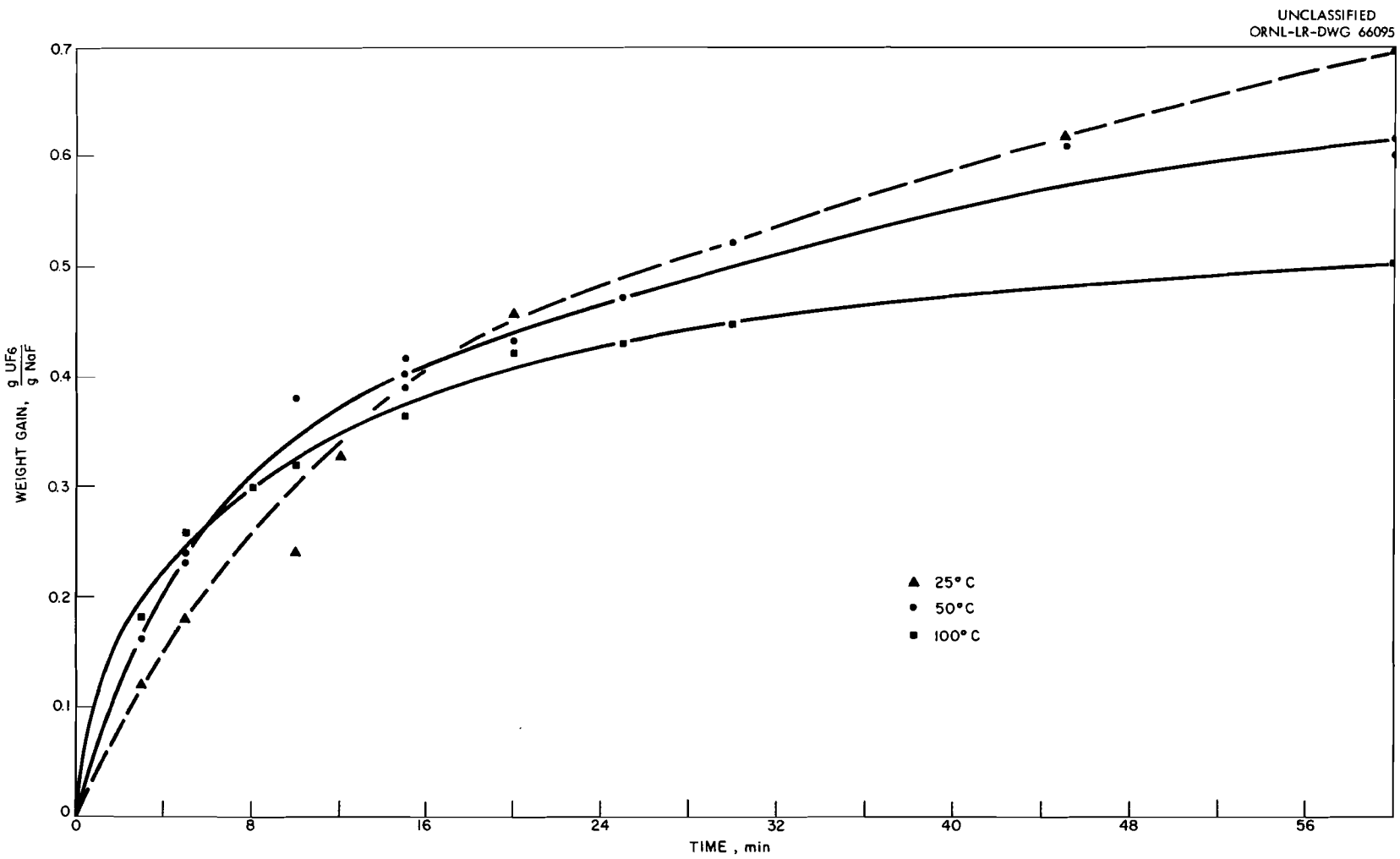

Fig. 3.2. Effect of temperature on UF_6 loading on NaF pellets. UF_6 concentration: 2.5 mole %; N_2 Rate: 0.129 g moles/min.

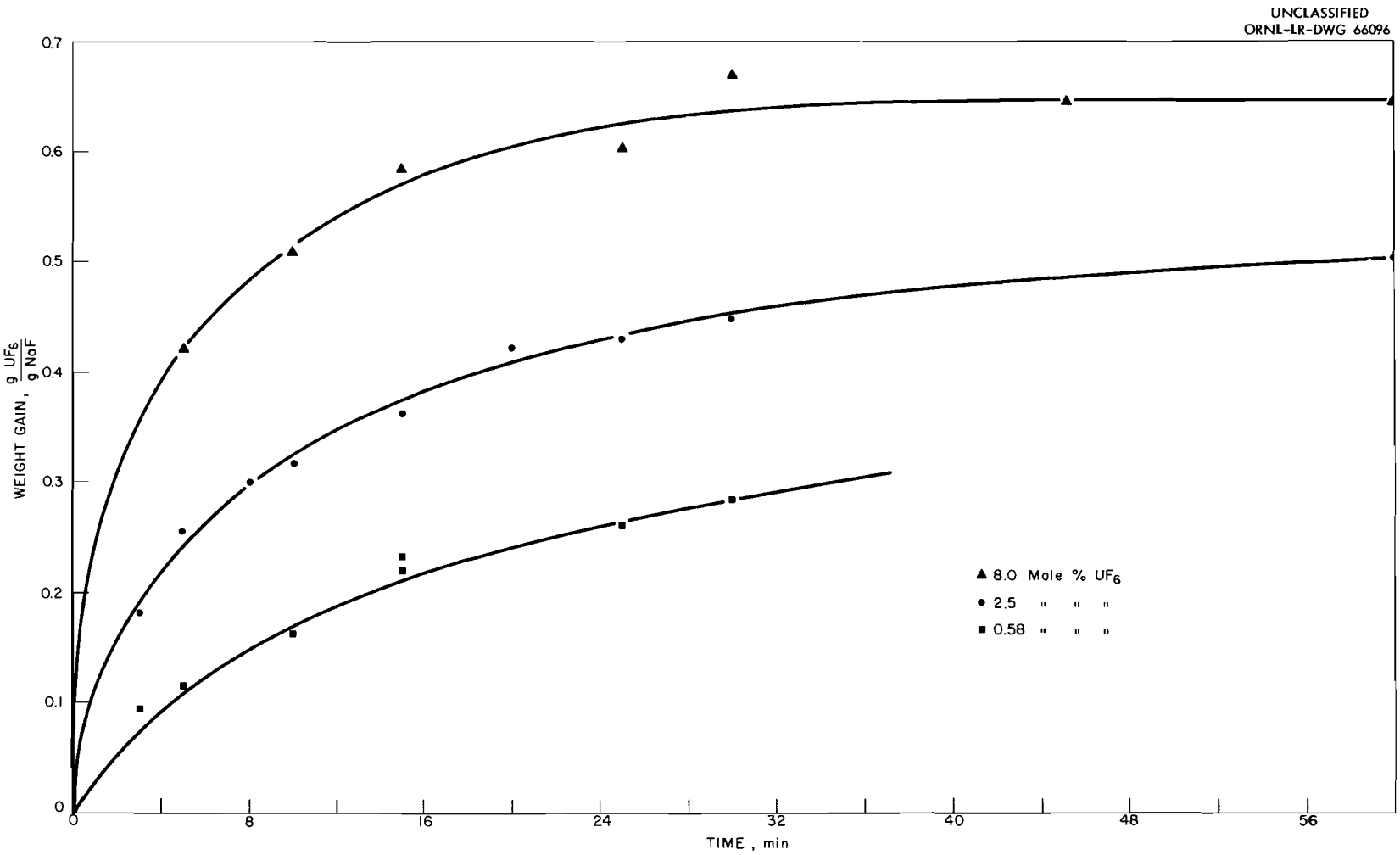

Fig. 3.3. Effect of gas concentration on UF_6 loading on NaF pellets. Temperature: 100°C; N_2 Rate: 0.129 g moles/min.

As may be seen, as the temperature is increased, the initial rate of loading is increased; however, the loading is observed to level out at a lower value at higher temperatures. Sectioning of NaF pellets indicated that at the high temperature, the UF_6 was concentrated at the surface of the pellet, whereas there was little radial variation in color at the low temperature.

The effect of inlet gas concentration is shown in Figure 3.3. As may be seen, the initial loading rate increases as the gas concentration is raised.

Future Work. Initial attempts at solution of the partial differential equation for loading rate by conventional finite difference methods did not prove successful due to instabilities in the calculation. Solution is complicated by the non-linear character of the equation. Work is continuing on an alternate method of solution. Comparison of the results of the calculation with the experimental data reported above will afford a check of the proposed physical model.

4.0 WASTE PROCESSING

J. C. Suddath

The purposes of the Waste Processing program are to develop equipment and obtain engineering data necessary for the design of a pot calcination pilot plant to be built at ICPP. During this period, the major effort was on the calciner-evaporator complex using simulated waste types (TBP-25 and Darex) for feed. Preliminary results of sixteen tests, R-49 through R-64, are presented.

4.1 Feed Rates - C. W. Hancher

Average system feed rates are presented (Table 4.1) based on the filling period only, since calcination and change out time will depend upon the activity level of the waste and the mechanical design of the pot changing facility.

Using TBP-25 type waste (no organic) as feed, the average feed rate was dependent upon the total feed volume (bulk density of cake) and the operating liquid level in the calciner. The average rate was 16.3 to 19.4 liters/hr to give a bulk density of 0.60 to 0.65 g/cm^3 (R-59, 55, 62, and 63). The average rate dropped to 11.6 liters/hr to fill a bulk density of 0.80 g/cm^3 (R-64). Operating with the liquid level ~6 in. higher in the calciner gave a rate of 17.6 liters/hr with a density of 0.83 g/cm^3.

Addition of organic to the TBP-25 type feed reduced the average feed rate and bulk density. With the pot being filled to bulk densities of only 0.44 to 0.61 g/cm^3, the average feed rates varied from 7.0 to 12.4 liters/hr (R-50, 51, 52, and 59).

Darex type feeds gave lower average feed rates, but higher bulk densities. The average feed rates varied from 8.6 to 16.5 liters/hr with bulk densities of 0.63 to 1.42 g/cm^3. The inverse effect of bulk density and average feed rate cannot be seen here, as the feed concentration was allowed to vary from run to run and during a run.

4.2 Continuous Evaporation with TBP-25 Feed

Six tests (R-49, 54, 55, 62, 63, and 64) were made using TBP-25 (simulated) feed, without organic in the close-coupled evaporator-calciner system. Another test (R-53) was stopped in the second hour because of a damaged feed pump. The purposes of these tests were (1) to determine the controllability of the close-coupled system, (2) to determine the build-up of mercury in the system, and (3) to determine the effect of a double-fill period on density and fill rate.

The evaporator control was good, except for the cyclic demand of the calciner feed controller (R-49, 54, and 55). Later revisions of the calciner feed system, which eliminated most of the cyclic effect, gave very good control of the evaporator system (R-64).

Table 4.1. Results for Tests R-49 through R-64

Run No.	Feed Type	Average System Feed Rate	Evaporator Concentration Factor Range[a]	Water to Feed Ratio	Off-gas[b] to Feed Ratio	NO_3 in Solids Range	Solids[c] Bulk Density	Total Feed Volume
		ℓ/hr	(g/ℓ)/(g/ℓ)	ℓ/ℓ	$ft^3/ℓ$	wt %	g/cm^3	ℓ
R-49	TBP-25	17.6	1.08 to 0.70	2.6	1.9	6.6 to 0.36	0.83	478
R-50	TBP-25[d]	11.5	1.30 to 0.71	2.4	2.4	4.1 to 0.08	0.52	346
R-51[e]	TBP-25[d]	7.0	1.35 to 1.15	2.5	3.2	6.0 to 0.08	0.59	308
R-52[e]	TBP-25[d]	9.8	1.02 to 0.93	2.3	2.4	0.2 to 0.06	0.44	440
R-53	TBP-25	Not Completed						
R-54	TBP-25	17.2	1.37 to 0.95	2.7	1.8	0.8 to 0.1	0.65	428
R-55	TBP-25	19.4	2.00 to 0.90	3.5	1.4	0.6 to 0.1	0.63	468
R-56	Darex	13.6	1.24 to 0.71	4.1	1.4	0.1 to 0.02	0.86	383
R-57	Darex	8.9	1.47 to 0.79	3.2	2.2	0.5 to 0.01	1.40	641
R-58	Darex	16.5	1.69 to 1.38	3.0	0.8	1.0 to 0.2	1.42	576
R-59[e]	TBP-25[d]	12.4	1.0	0	1.3	1.0 to 0.07	0.61	397
R-60[e]	Darex	8.6	1.09 to 0.65	5.5	1.8	2.0 to 0.10	1.29	336
R-61[e]	Darex	10.6	1.0 to 0.82	3.8	-	1.0 to 0.02	1.13	307
R-62	TBP-25	16.8	1.43 to 0.74	4.5	1.0	2.0 to 0.10	0.63	446
R-63	TBP-25	16.3	1.22 to 0.87	2.3	0.9	2.0 to 0.20	0.61	421
R-64	TBP-25	11.6	1.1 to 0.63	2.1	1.2	0.2 to 0.002	0.80	560

[a] Concentration ratio during feeding period (see Table 4.2).

[b] Off-gas volume includes 10-20 ft^3/hr system inleakage.

[c] Total weight of solids averaged over 60 liter pot volume.

[d] Organic added to feed.

[e] Batch tests.

4.3 Batch Evaporation System

Five batch flowsheet tests were made using Darex and TBP-25 (with organic) type feeds. The purposes of these tests were (1) to determine the effect of long digestion on organics, (2) establish the chemical flowsheet for the batch system, and (3) determine the quantity of feed that is ejected from the calciner during "foam-over."

The presence of organic in the calciner feed gave an uncontrollable foaming problem and it was anticipated that a long digestion period in the evaporator would reduce the foaming characteristics of the simulated waste. Tests (R-51 and 52) were made where the waste was held at its boiling point for 5 and 48 hrs without any noticeable effect on the foaming in the calciner. Later tests at ICPP revealed that the foaming characteristics of the actual waste was not as serious as the simulated waste solutions with organic added.

4.4 Organic in Waste

In TBP-25 feed for tests R-50, 51, 52, and 59, organic was added to the feed to attempt to simulate the organic in the stored waste. The concentration of organic in stored waste might be about 0.01 M phosphate as decomposed TBP, probably DBP and MBP. To the TBP-25 simulated waste 1 ml of both DBP and MBP per liter were added. The solution was stirred 1 hr and then decanted. The resulting mixture was used as feed (Table 4.2).

Test R-50 used the continuous flowsheet. The feed in the evaporator foamed some but was not difficult to control. However, the large amount of foam in the calciner caused level control problems and was carried over into the off-gas line, returning solids to the evaporator.

Tests R-51 and 52 were a batch test series. The feed for R-51 was evaporated from 600 liters to 500 liters in 4 hr with no addition of water (Table 4.2). While R-51 feed was being fed to the calciner, 600 liters of R-52 feed was in the batch evaporator catching the condensate from the calciner and steam stripping the excess nitric acid by addition of water for 48 hr. The evaporated feed used in R-51 foamed very badly in the calciner causing much to carry over into the batch evaporator. The differential temperature control ("DTC") did not "see" the foam. Cooking R-52 for 48 hr effected no difference in the foaming characteristics. The resulting solids (Table 4.3) had a lower inferred thermal conductivity, because of the lower calciner boilup rate and the lower feed rate. The solid did deposit radially, Figure 4.1, leaving a greater void than with TBP-25 waste without organic (test R-47)(Figure 4.2).

4.5 Double-fill Operation in a Single Pot

Test R-64 was a two-fill TBP-25 test. A heated off-gas line to prevent mercury solid accumulation was also being tested. The procedure was to feed for 18 hr (400 liters), then calcine 7 hr. At the end of the first calcining period most of the temperatures in the solid were above 600°C, three centerline temperatures were as low as 465°C, 265°C, and 375°C for for the bottom three zones counting down.

Table 4.2. Feed Composition

Run No.	H^+ M	NO_3^- g/liter	Fe^{+++} g/liter	Al^{+++} g/liter	Ru^{++++} g/liter	Hg^{+++} gl/liter	P g/liter
R-49	1.73	438	0.26	51.7	0.24	5.8	-
R-50	1.87	457	0.23	50.8	0.24	-	0.33
R-51	1.52	398	0.20	45.9	0.21	-	0.23
R-52	1.90	486	0.31	52.7	0.26	-	0.29
R-54	2.16	394	0.18	38.0	0.19	3.5	-
R-55	1.90	480	0.38	40.0	0.19	6.1	-
R-56	0.78	349	66.0	-	-	-	-
R-57	1.37	333	67.2	-	-	-	-
R-58	1.47	376	71.0	-	-	-	-
R-59	1.70	420	0.15	49.3	0.2	4.1	-
R-60	1.37	566	117.0	-	-	-	-
R-61	1.47	566	113.0	-	0.26	-	-
R-62	1.77	451	0.18	49	-	4.3	-
R-63	1.71	436	0.30	45	-	4.6	-
R-64	1.62	433	0.65	49	-	4.6	-

Table 4.3. Average Cake Composition

Run No.	Nitrate wt %	Fe wt %	Al wt %	Hg wt %	Ru wt %	P wt %	Total Cake Weight, kg
R-49	3.48	0.30	57.5	0.62	-	-	50.0
R-50	2.09	0.25	41.0	7.0	0.13	0.20	31.0
R-51	3.00	0.30	45.0	1.5	0.17	0.22	35.4
R-52	0.10	0.50	47.0	0.80	0.22	0.002	26.4
R-54	0.43	0.48	46.5	0.72	0.18	-	39.0
R-55	0.28	0.39	47.1	0.25	0.12	-	38.0
R-56	0.05	48.0	-	-	-	-	51.6
R-57	0.20	47.0	-	-	-	-	84.0
R-58	0.17	47.2	1.01	-	0.01	-	84.9
R-59	0.56	-	49.1	1.99	-	-	36.2
R-60	0.008	47.0	0.55	-	0.01	-	66.3
R-61	0.32	45.5	0.28	-	0.07	-	67.2
R-62	1.71	1.25	46.1	2.88	-	-	37.7
R-63	0.97	0.64	47.8	1.91	-	-	36.3
R-64	0.06	0.16	49.6	0.58	-	-	47.7

Fig. 4.1. TBP-25 with organics calcined solids--Test R-52.

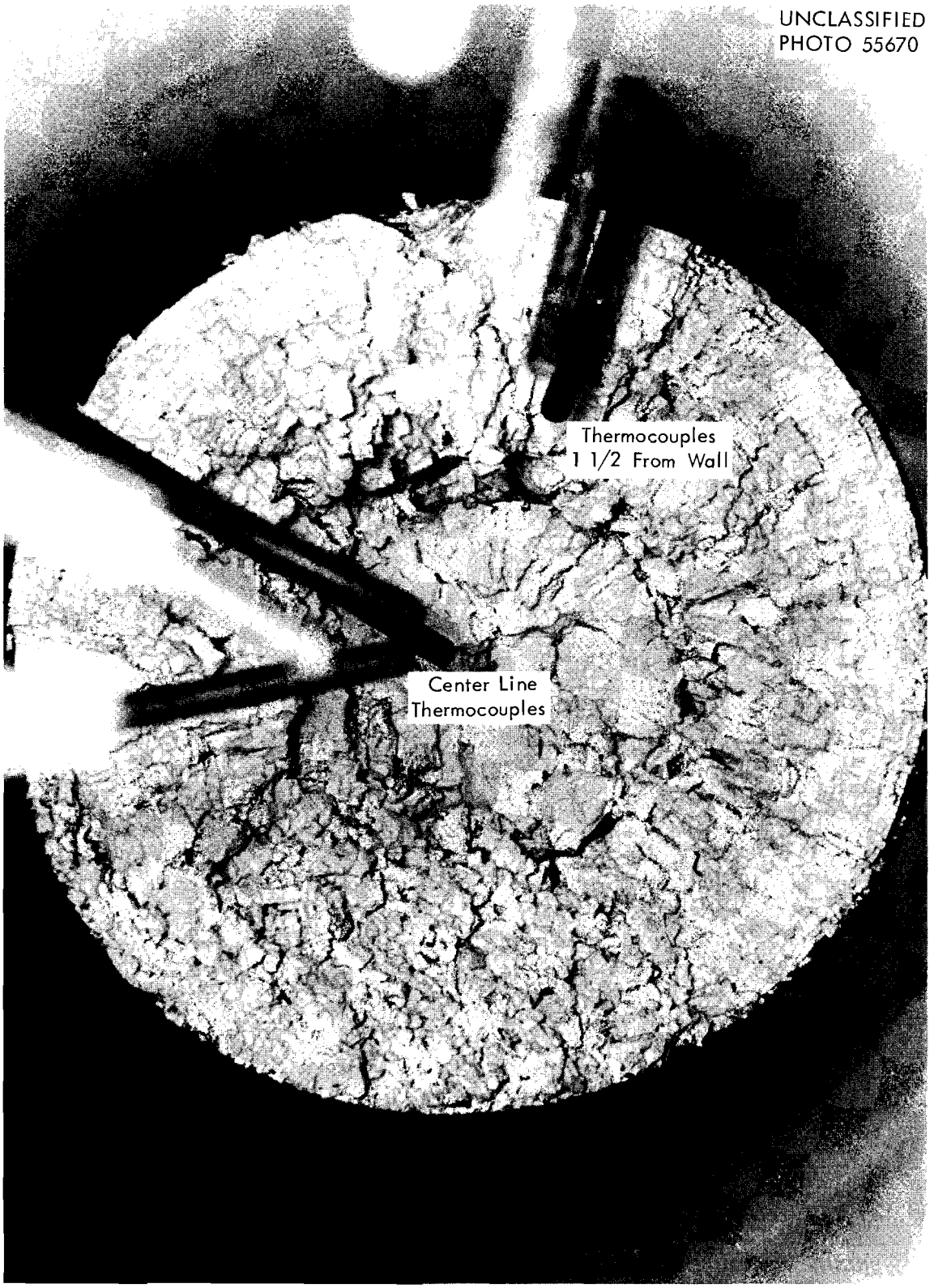

Fig. 4.2. Calcined TBP-25 solids--Test R-47.

After the first calcination period had dried and cracked the solid, 160 liters more of feed was fed to the calciner in 19 hr. The average feed rate including the first calcining period was 11.6 liters per hour.

The solid had a bulk density of 0.80 g/cc.

The off-gas line was heated to 300°C outside. This kept most of the mercury solids from building up. The solid moved to the first cold section of pipe, the entrance to the first condenser, and then deposited blocking the entire line. These solids are soluble in 6 M nitric acid.

4.6 Mercury Build-up Tests

Tests R-62 and 63 started to be a four-test series during which the evaporator would operate without shutting down or being drained, as a production evaporator would operate. The major purpose of these tests was to determine the build-up of mercury in the system. The series was discontinued after two tests because the off-gas was plugged with mercury-oxide-nitrate yellow solid of the following concentration.

Hg	HNO_3	Al	Fe
	wt %		
73.9	9.26	0.01	0.02

Twenty-three per cent of the mercury from R-62 feed returned to the evaporator and 6% of the mercury in the feed was left for run R-63. The evaporator started test R-62 with 8 g/liter mercury, ended with 17 g/liter mercury, and ended test R-63 with an accumulated mercury concentration of 22 g/liter.

The solids from test R-62 and 63 had bulk densities of 0.63 and 0.61 g/cc.

4.7 Darex Waste Tests

Tests R-56, 57, and 58 were Darex tests (Table 4.1) used to supply the data for the continuous chemical flowsheet for the Idaho Pilot Plant. The feed iron composition varied from 66 to 71 g/liter (Table 4.2). The feed was evaporated to an iron concentration of 82-120 g/liter. The feed should be evaporated as much as possible to reduce the amount of water to be evaporated from the calciner pot. However, at a concentration of 110 g of iron per liter or greater, solutions cooled below approximately 80°C precipitate solids which plug the feed line when the pump is stopped. Concentrations in the range of 90 to 100 g/liter can be controlled.

Test R-56 was a normal calciner test, a 28-hr fill period, and a 9-hr calciner period. The pot had a large uniform void in it when opened, and an accordingly low bulk density of 0.86 g/cc. It was approximately 25 to 30% filled with solids.

Test R-57 was started late in the week. The pot was filled for 32 hr (412 liters) and allowed to cool. This was a normal test. However, on Monday the pot was reheated and fed again for 50 hr. The demand filling rate was low: 229 liters in 50 hr (4.6 liters/hr). A total of 641 liters was fed to the system. The resulting pot of solid appeared about 80-90% full and had a bulk density of 1.40 g/cc which is good for Darex.

Test R-58 was programmed for two fill periods: fill 13 hr, calcine 7 to crack the cake, fill 13 hr more, and calcine 10 hr. This procedure operated very smoothly. The resulting pot of solid had a density of 1.42 g/cc and was 75 to 85% full.

Tests R-60 and 61 were batch Darex tests to procure data for the "Darex Batch Flowsheet" for the Idaho pilot plant. The feed for R-60 (Table 4.2) was pre-evaporated from 70 g/liter iron to 117 g/liter iron before the test started. The feed was kept warm; therefore, no solids formed, but 117 g/liter iron is too concentrated to be used routinely.

The feed for R-61 was evaporated with calciner condensate from R-60 to 113 g/liter iron.

These two tests controlled well. The resulting solid had a bulk density of 1.29 and 1.13 g/cc for tests R-60 and 61.

The calcined cake analysis (Table 4.3) does not give good material balances for minor constituents but major constituents (iron in Darex or aluminum in TBP-25) gave material balances within 10% for most tests.

4.8 Calciner Liquid Level Control

The calciner pot feed rate is controlled by calciner liquid level control. The use of differential pressure bubbler type was discontinued, because of the plugging of the probes, in favor of the thermocouple type liquid level probe. Many different types of thermocouple liquid level probes have been tested (Figures 4.3 and 4.4, Table 4.4) to determine a type with proportional response suitable for controlling.

The most suitable type (Type D) is a 3/8-in.-dia 347 stainless steel tube closed on the end. The closed end of the tube is filled with a 15-in. piece of solid copper with a 6-in.-long hole drilled in it for a 1/8-in.-dia stainless covered C.A. thermocouple. This arrangement of 9 in. of rod below the couple acts as a heat sink and allows the couple temperature to change as a function of liquid height on the rod.

UNCLASSIFIED
ORNL-LR-DWG 63192R

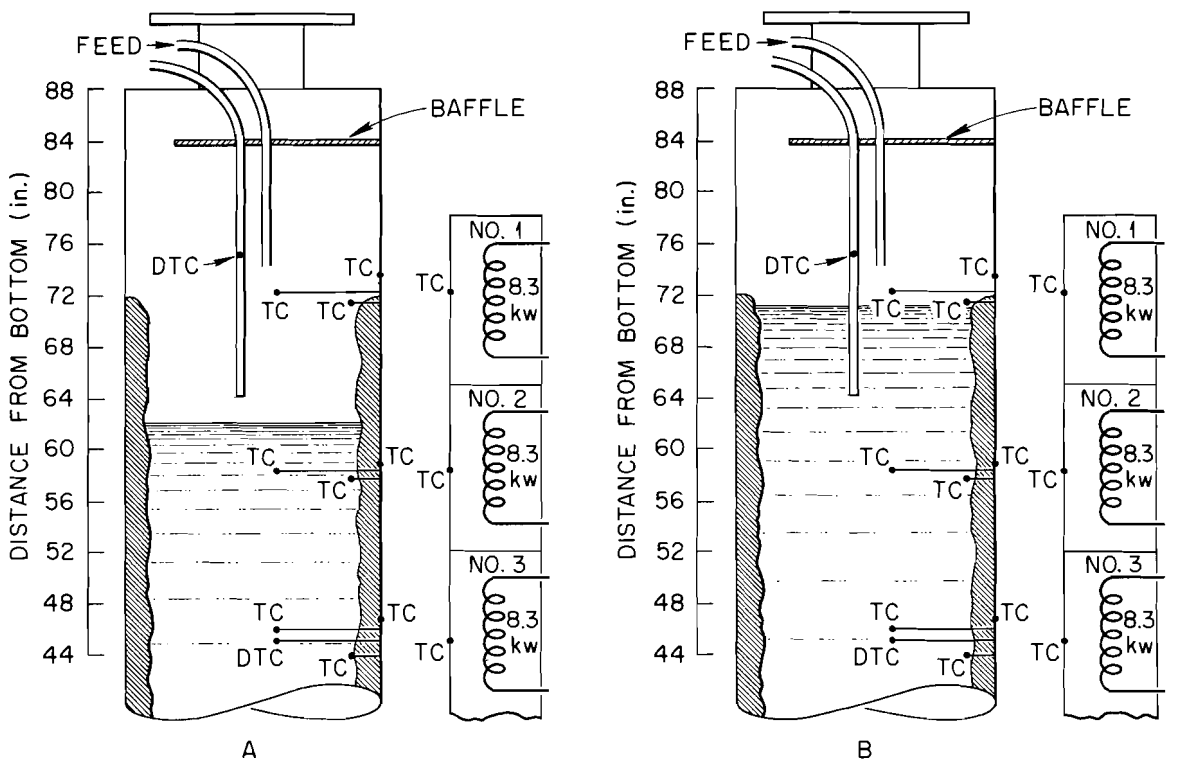

Large Temp. Difference
Low Liq. Level

Small Temp. Difference
Liq. Level Near Set Point

Fig. 4.3. Temperature control of calciner liquid level.

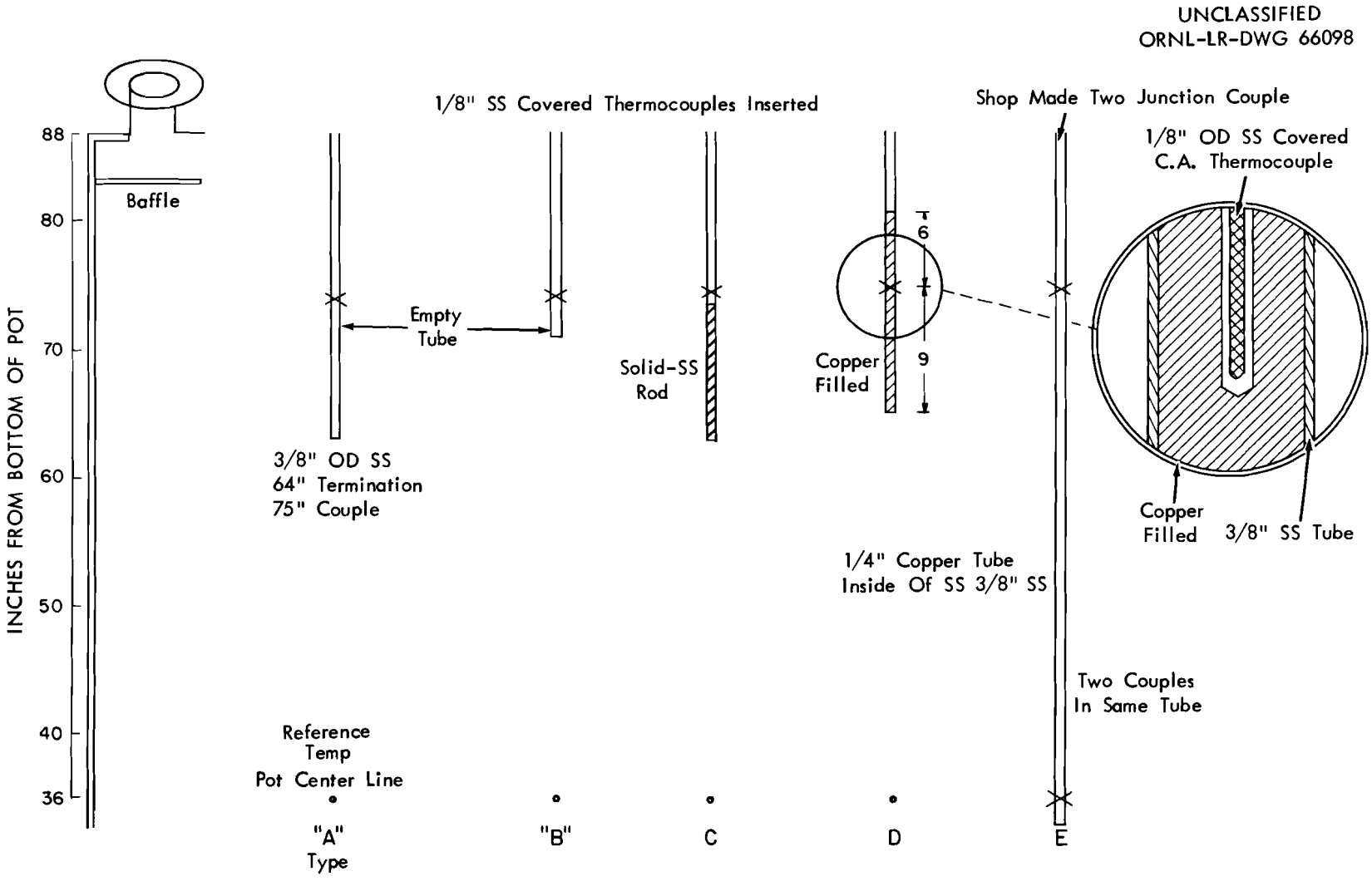

Fig. 4.4. Different types of couples used for calciner pot liquid level control.

Table 4.4. Type of Couple Used for Tests R-43 to R-64

Run	Type of Couple (Fig. 4.2)	
R-43	A	
R-44	B	
R-45	B	
R-46	B	
R-47	B	
R-48	B	
R-49	B	
R-50	B	
R-51	B	
R-52	B	
R-53	A	
R-54	C	
R-55	C	
R-56	C	
R-57	D	
R-58	D	
R-59	D	
R-60	D	
R-61	D	No ref.
R-62	E	
R-63	D	No ref.
R-64	D	No ref.

DISTRIBUTION

1. E. L. Anderson (AEC Washington)
2. F. P. Baranowski (AEC Washington)
3. W. G. Belter (AEC Washington)
4. S. Bernstein (Paducah)
5. R. E. Blanco
6. J. O. Blomeke
7-10. J. C. Bresee
11. R. E. Brooksbank
12. K. B. Brown
13. F. R. Bruce
14. J. A. Buckham (ICPP)
15. L. P. Bupp (HAPO)
16. W. D. Burch
17. W. H. Carr
18. G. I. Cathers
19. J. T. Christy (HOO)
20. W. E. Clark
21. V. R. Cooper (HAPO)
22. K. E. Cowser
23. F. E. Croxton (Goodyear Atomic)
24. F. L. Culler, Jr.
25. W. Davis, Jr.
26. O. C. Dean
27. D. E. Ferguson
28. L. M. Ferris
29. R. J. Flanary
30. E. R. Gilliland (MIT)
31. H. E. Goeller
32. M. J. Googin (Y-12)
33. H. B. Graham
34. A. T. Gresky
35. P. A. Haas
36. M. J. Harmon (HAPO)
37. F. E. Harrington
38. L. P. Hatch (BNL)
39. O. F. Hill (HAPO)
40. J. M. Holmes
41. R. W. Horton
42. A. R. Irvine
43. G. Jasny (Y-12)
44. H. F. Johnson
45. W. H. Jordan
46. S. H. Jury
47. K. K. Kennedy (IDO)
48. B. B. Klima
49. E. Lamb
50. D. M. Lang
51. S. Lawroski (ANL)
52. R. E. Leuze
53. W. H. Lewis
54. J. A. Lieberman (AEC Washington)
55. R. B. Lindauer
56. A. P. Litman
57. J. T. Long
58. B. Manowitz (BNL)
59. J. L. Matherne
60. J. A. McBride (ICPP)
61. J. P. McBride
62. W. T. McDuffee
63. R. A. McGuire (ICPP)
64. R. P. Milford
65. J. W. Morris (SRP)
66. E. L. Nicholson
67. J. R. Parrott
68. F. S. Patton, Jr. (Y-12)
69. H. Pearlman (AI)
70. R. H. Rainey
71. J. T. Roberts (IAEA, Vienna, Aust.)
72. K. L. Rohde (ICPP)
73. C. A. Rohrmann (HAPO)
74. A. D. Ryon
75. W. F. Schaffer, Jr.
76-78. E. M. Shank
79. M. J. Skinner
80. C. M. Slansky (ICPP)
81. S. H. Smiley (ORGDP)
82. J. I. Stevens (ICPP)
83. C. E. Stevenson (ANL, Idaho)
84. K. G. Steyer (General Atomics)
85. E. G. Struxness
86. J. C. Suddath
87. J. A. Swartout
88. F. M. Tench (Y-12)
89. V. R. Thayer (duPont, Wilmington)
90. W. E. Unger
91. J. Vanderryn (AEC ORO)
92. F. M. Warzel (ICPP)
93. C. D. Watson
94-123. M. E. Whatley
124. G. C. Williams
125. R. H. Winget
126. R. G. Wymer
127-128. Central Research Library
129-132. Laboratory Records
133. Laboratory Records (RC)
134. Document Reference Section
135. Research and Development Division
136-150. DTIE