CENTRAL RESEARCH LIBRARY
DOCUMENT COLLECTION

OAK RIDGE NATIONAL LABORATORY

operated by

UNION CARBIDE CORPORATION

for the

U.S. ATOMIC ENERGY COMMISSION

ORNL-TM-241

OAK RIDGE NATIONAL LABORATORY LIBRARIES
3 4456 0548840 6

THORIUM UTILIZATION PROGRAM: A SURVEY OF PROCESSING METHODS FOR THROIUM REACTOR FUELS

W. L. Carter

CENTRAL RESEARCH LIBRARY
DOCUMENT COLLECTION
LIBRARY LOAN COPY
DO NOT TRANSFER TO ANOTHER PERSON
If you wish someone else to see this document, send in name with document and the library will arrange a loan.

NOTICE

This document contains information of a preliminary nature and was prepared primarily for internal use at the Oak Ridge National Laboratory. It is subject to revision or correction and therefore does not represent a final report. The information is not to be abstracted, reprinted or otherwise given public dissemination without the approval of the ORNL patent branch, Legal and Information Control Department.

LEGAL NOTICE

This report was prepared as an account of Government sponsored work. Neither the United States, nor the Commission, nor any person acting on behalf of the Commission:

A. Makes any warranty or representation, expressed or implied, with respect to the accuracy, completeness, or usefulness of the information contained in this report, or that the use of any information, apparatus, method, or process disclosed in this report may not infringe privately owned rights; or

B. Assumes any liabilities with respect to the use of, or for damages resulting from the use of any information, apparatus, method, or process disclosed in this report.

As used in the above, "person acting on behalf of the Commission" includes any employee or contractor of the Commission, or employee of such contractor, to the extent that such employee or contractor of the Commission, or employee of such contractor prepares, disseminates, or provides access to, any information pursuant to his employment or contract with the Commission, or his employment with such contractor.

OAK RIDGE NATIONAL LABORATORY LIBRARIES
3 4456 0548840 6

ORNL-TM-241

Contract No. W-7405-eng-26

THORIUM UTILIZATION PROGRAM: A SURVEY OF PROCESSING METHODS FOR THORIUM REACTOR FUELS

W. L. Carter

DATE ISSUED

JUL 12 1962

OAK RIDGE NATIONAL LABORATORY
Oak Ridge, Tennessee
operated by
UNION CARBIDE CORPORATION
for the
U.S. ATOMIC ENERGY COMMISSION

ABSTRACT

The field of chemical processing of thorium reactor fuels has been surveyed and is discussed. Thorium processing can be categorized as aqueous, fused fluoride salt or pyrometallurgical; the several processes in each of these classifications are discussed from the standpoint of process description, performance, materials of construction, limitations, and advantages, cost data, and status of development.

CONTENTS

Page

SUMMARY 1

INTRODUCTION 13

AQUEOUS PROCESSES: THE THOREX PROCESS AND HEAD-END PROCESSES FOR THOREX 15

1.0 Thorex Process 17

2.0 Darex-Thorex Process 28

3.0 Sulfex-Thorex Process 34

4.0 Modified Zirflex Process 40

5.0 Zirflex Process 46

6.0 Zircex Process 52

7.0 Grind-Leach Process for Graphite Fuels 61

8.0 Fuming HNO_3 Process for Graphite Fuels 67

9.0 Combustion-Dissolution of Graphite Fuels 68

10.0 Ultrasonic Leaching of Graphite Fuels 69

11.0 Perflex Process 70

12.0 Oxyhydrochlorination Process 74

13.0 Beryllium Oxide Processes 79

14.0 Mechanical Processing 82

15.0 Stainless Steel Chlorination 86

16.0 Thorium Oxide-Bismuth Slurry 88

FUSED FLUORIDE SALT PROCESSES: FLUORIDE VOLATILITY AND HEAD-END AND TAIL-END PROCESSES FOR FLUORIDE VOLATILITY 91

17.0 Fluoride Volatility Process 93

18.0 Head-End Processes for Fluoride Volatility 105

19.0 Tail-End Processes for Fluoride Volatility 112

PYROMETALLURGICAL PROCESSES 121

20.0 Liquid Metal Extraction 123

21.0 Drip Melting 132

22.0 Electrorefining 135

MISCELLANEOUS FUELS AND PROCESSING METHODS 139
23.0 Fission Product Elution from ThO_2-UO_3 Slurry Fuels 141
24.0 Thorium Fuels 143

THORIUM UTILIZATION PROGRAM: A SURVEY OF PROCESSING METHODS FOR THORIUM REACTOR FUELS

SUMMARY

The methods of processing reactor fuels which contain thorium have been reviewed and summarized herein. It is intended that this review include all physical and chemical forms of thorium that have been considered for use in blanket or core regions of breeder and converter reactors. In general, thorium fuel processes fall into one of three categories; namely, aqueous, fused fluoride salt or pyrometallurgical processing. Tables A, B, and C of this summary have been prepared to classify the several processes in this manner, giving the types of fuels which are treated by each process, a brief description of the process and the status of development.

Aqueous Processing

The most fully developed of all methods of processing irradiated thorium fuel is the Thorex process. This is an aqueous solvent extraction process that has been adequately demonstrated in a pilot plant at Oak Ridge National Laboratory. Thorex is capable of sufficiently decontaminating irradiated fuel from fission products that both the thorium and uranium products can be handled directly; however, in recycled fuel radioactive heavy isotopes can build in making it necessary to use remote handling techniques. In addition, the partition between thorium and uranium is almost quantitative, and process losses of these materials are extremely low, being about 0.1% for uranium and about 1% for thorium. The Thorex process was developed for processing irradiated thorium metal. However, since the process has performed so well as originally designed---and perhaps because no competitive process is available---there has been a propensity to channel a large number of other types of fuels toward Thorex by instituting special head-end treatments to prepare the fuel for aqueous solvent extraction. In this manner oxide fuels, stainless steel-bearing fuels, zirconium-bearing fuels, molybdenum-bearing fuels, graphite-bearing fuels and others have been directed toward Thorex for ultimate decontamination and recovery. A summary of these numerous head-end processes is included in Table A. For some of these processes the head-end treatment is more complicated than the solvent extraction.

A large unknown in the realm of aqueous processing is the chemistry of protactinium. Up to this time the irradiated thorium that has been processed in the pilot plant has been decayed long enough that the presence of protactinium and its accompanying radiation was not a problem. However in order to avoid large hold-up inventories in breeder and converter reactor chemical processing plants, it will be necessary to reduce decay time to a minimum, the ideal situation being to eliminate decay time and go directly to processing. It is not known how the presence of appreciable quantities of protactinium will affect solvent extraction mechanisms; certainly its radiation will increase solvent damage and the problems which accompany this damage such as increased uranium loss to aqueous waste.

Fused Fluoride Salt Processing

The ease with which uranium hexafluoride can be volatilized from molten fluoride melts has led to the development of the Fluoride Volatility Process, and some effort has been made to adapt this process to thorium fuels. Most of the development has been carried out on molten fluoride salt systems such as mixtures of $LiF-BeF_2-ThF_4-UF_4$ and has been directed toward recovering decontaminated thorium, uranium and valuable carrier salt. Uranium recovery is relatively simple and has been demonstrated both in the laboratory and pilot plant; the pilot plant runs were made on a salt that did not contain thorium. However, efforts to recover decontaminated thorium and decontaminated carrier salt have been only partially successful. Several apparently promising processes have been investigated, but it must be concluded that there is at this time no satisfactory method for recovering thorium and salt constituents from fission products. Consequently, the only established means of purging fission products from a reactor that is committed to fluoride volatility processing is to discard the thorium-bearing salt on a predetermined cycle after the uranium has been recovered.

Another area of fused fluoride salt processing in which there is very little known is that of the chemistry of protactinium. This element is an appreciable neutron absorber, and attempts have been made to separate it from

molten fluoride fuels both by volatilization as the fluoride and by precipitation as the oxide. There are conflicting data in the literature on the volatilization of protactinium. The oxide precipitation method has been demonstrated in the laboratory, but considerable development is needed before a full evaluation can be made. Protactinium processes itself by beta decay with an average lifetime of 39.6 days, so any method for processing protactinium to effectively lower its concentration in a reactor must process the entire fuel volume on a very short cycle time, every five days or less. Obviously such a process must be very simple and inexpensive.

Fused fluoride salt processing is not confined to fluid fuel systems. Stainless steel-, zirconium-, and beryllium-type solid fuels may also be processed by specifically designed head-end treatments. A summary of fluoride volatility processing for thorium fuels is presented in Table B.

Pyrometallurgical Processing

Pyrometallurgical processing is the name used to identify those processes that are carried out at temperatures greater than about 600°C. Most of these processes employ a liquid metal as an extractant for either fission products or thorium to facilitate decontamination and separation from uranium. However, there is one process, drip melting, that for decontamination relies upon the volatilization of most of the fission products at the fuel melting temperature.

The properties that are generally desired in a metallic extractant are first that the melting point be less than about 700°C, and second that the boiling point be low enough at reduced pressures to permit volatilization. A third desirable property is that the metal form an intermetallic compound with either thorium or uranium to permit partitioning. The choice of metals is thereby limited to a few such as magnesium, zinc, aluminum, lead and thallium, and of these only magnesium and zinc have both a low melting point and relatively low boiling point.

Pyrometallurgical processes are not high decontamination processes and consequently do not separate fission products sufficiently to permit direct handling of the discovered fuels. However, sufficient decontamination is attained to remove a significant amount of the neutron poisons and permit fuel recycle. Some nuclides, such as the rare earths, might be about 50% removed,

whereas some, like strontium and cesium, might be about 90% removed. Another limitation is that a large degree of separation between thorium and uranium is usually not possible; this would make the process more suitable for a converter reactor in which all fuel is recycled. Significant advantages of pyrometallurgical processes are the small volumes of radioactive wastes and the ability to process irradiated fuel almost immediately upon discharge from the reactor. So far, pyrometallurgical techniques have been applied only to metal and alloy fuels.

A summary of pyrometallurgical processes is given in Table C.

Reactor Systems

A summary of reactor systems, fuels and processing methods is given in Table D. This tabulation includes those reactors which have been or are being given serious consideration in theoretical study and/or development. The processing method for each reactor fuel is briefly described. For most of the reactors listed, enough process development has been carried out to define the process, and in some cases alternate processing methods have been developed. Most of the current reactor fuels can be processed by Thorex after a suitable head-end treatment; indeed, most of the recent chemical processing research has been conducted on head-end processes for Thorex.

The process most completely developed for molten fluoride salt fuels is fluoride volatility. A significant limitation to this process is that it offers no way of recovering thorium or carrier salt.

Table A. Head-End Processes to Prepare Thorium Fuels for Aqueous Processing by Thorex

	Description of Fuel Treated	Brief Description of Process	Development Status	Remarks
Metal and Alloy Fuel				
Thorex Head-End	Thorium	Dissolve in concentrated HNO_3 catalyzed by fluoride ion	Pilot plant	Well established procedure in Thorex process
Thorex Head-End	Th - U alloy	Dissolve in concentrated HNO_3 catalyzed by fluoride ion	Pilot plant	Well established procedure in Thorex process
Thorex Head-End	Th-U-Al alloy	Dissolve in concentrated HNO_3 catalyzed by fluoride and mercuric ions	Pilot plant	Well established procedure in Thorex process
Thorex Head-End	Al clad Th-U alloy	Remove jacket with caustic followed by core dissolution in HNO_3 catalyzed by fluoride; or dissolve clad + core in HNO_3 catalyzed by fluoride and mercuric ions	Pilot plant	Well established procedure in Thorex process
Thorium Oxide Slurries				
Thorex Head-End	ThO_2-H_2O slurry	Dissolve in concentrated HNO_3 catalyzed by fluoride ion	Engineering scale	Dissolution expected to be quite similar to established Thorex procedures for metal; first dissolutions now being made
Thorex Head-End	ThO_2-D_2O slurry	Recover D_2O by evaporation and drying; dissolve in concentrated HNO_3 catalyzed by fluoride ion	Engineering scale	Dissolution expected to be quite similar to established Thorex procedures for metal; first dissolutions now being made
Stainless Steel Bearing Fuel				
Sulfex	Stainless steel clad ThO_2-UO_2	Clad removed with 6 M H_2SO_4; ThO_2-UO_2 dissolved in 13 M HNO_3-0.04 M NaF - 0.1 M Al $(NO_3)_3$	Laboratory and Engineering scale development complete	ORNL development
Darex	Stainless steel clad ThO_2-UO_2	Clad removed with aqua regia; ThO_2-UO_2 dissolved in 13 M HNO_3- 0.04 M NaF - 0.1 M $Al(NO_3)_3$; chloride stripped by HNO_3 or NO_2 vapor	"Hot" and "cold" laboratory plus small-scale engineering development	ORNL development
Mechanical Dejacketing	Stainless steel clad U metal	Jacket expanded hydraulically and fuel pushed out; or alternately fuel rods cut into small lengths and jacket removed by slitting longitudionally	Facility built and operated "hot" on SRE fuel	ORNL development; no Th present in fuel but presence of Th should not affect operations
Shear-and-Leach	Stainless steel clad ThO_2-UO_2	Fuel sheared into 1-inch lengths; ThO_2-UO_2 leached by 13 M HNO_3-0.04 M NaF - 0.1 M Al $(NO_3)_3$; clad compacted and discarded	Demonstrated in engineering scale equipment	ORNL development
Stainless Steel Chlorination	Stainless steel clad on unspecified fuel	Remove clad with Cl_2 at > 600°C	Preliminary laboratory scale	ANL and BNL development; no work with a fuel, just stainless steel + Cl_2 reactions

Table A - Continued

	Description of Fuel Treated	Brief Description of Process	Development Status	Remarks
Zirconium Bearing Fuel				
Modified Zirflex	Al clad 8% U - 91% Zr - 1% H alloy	Al clad dissolved in NaOH; core dissolved in 5.4 M NH_4F-0.3 NH_4NO_3 + H_2O_2	Laboratory development complete and flowsheet demonstrated in engineering scale equipment	ORNL development; no Th in process development but Th should dissolve with core
Zirflex	UO_2 pellets in Zircaloy-2 tube	Zircaloy-2 dissolved in 6 M NH_4F - 1 M NH_4 NO_3; UO_2 dissolved in 10 M HNO_3 - 0.1 M Al $(NO_3)_3$	Laboratory development complete and engineering scale dissolutions made	ORNL and HAPO development; no development with Th in fuel but ThO_2 should present no problem
Zircex	Al clad 8% U - 91% Zr - 1% H alloy	Al and Zr reacted with HCl gas to volatilize $AlCl_3$ and $ZrCl_4$; U volatilized as UCl_4 with CCl_4; chlorides selectively condensed and UCl_4 dissolved in 13 M HNO_3	"Cold" engineering scale hydrochlorinations and chlorinations made	ORNL development; scouting experiments indicate process will work with Th present
Perflex	7% U-Zr-Sn alloy	Fuel dissolved in 34.4 M HF-1.7 M H_2O_2; 1.7 M HNO_3 - 1.3 M $Al(NO_3)_3$ added to make nitrate solution	Laboratory investigations only	ORNL development; no work with Th present in fuel but Th should dissolve in fluoride reagent
Molybdenum Bearing Fuel				
Oxyhydrochlorination	90% U-10% Mo canned in Al	Al reacted with HCl gas to volatilize $AlCl_3$; Mo reacted with HCl + air to volatilize MoO_2Cl_2; U oxidized to U_3O_8 and dissolved in HNO_3	Flowsheet demonstrated in cold laboratory runs	ORNL development; no work on Th but no difficulty anticipated
Carbon and Graphite Bearing Fuel				
Grind-Leach	Th-U carbides in graphite pebble bed reactor fuel; SiC coated ThO_2-UO_2	Fuel ground to small mesh and leached with HNO_3	Laboratory and engineering scale development in progress	ORNL development
Fuming HNO_3	Th-U carbides in graphite	Graphite disintegrated with fuming HNO_3 and Th + U leached	Laboratory studies in progress	ORNL development; eliminates grinding operation in grind-leach process
Combustion-Dissolution	Th-U carbides in graphite	Fuel ignited in O_2 to burn graphite; residue dissolved in HNO_3	Laboratory studies only	ORNL development; almost quantitative U and Th recovery
Ultrasonic Leaching	Th-U carbides in graphite	Fuel ground and leached with HNO_3 augmented by ultrasonic vibrations	Laboratory studies only	Aeroprojects, Inc., development; gives improved metal recoveries

Table A - Continued

	Description of Fuel Treated	Brief Description of Process	Development Status	Remarks
Beryllium Bearing Fuel				
Leaching fuel from BeO	Pelletized BeO containing UO_2	Fuel crushed and digested with acids	Initial laboratory stage	ORNL development; no process definitely established; no Th development
Beryllium dissolution	Be clad ThO_2-UO_2	Dissolve clad; then dissolve core	Initial laboratory stage	ORNL development; no process definitely established; no Th development
Beryllide dissolution	$ThBe_{13}$-UBe_{13}	Dissolve entire fuel	Scouting experiments	ORNL development
Aluminum Oxide Bearing Fuel				
Leaching fuel from Al_2O_3	Al_2O_3 matrix containing UO_2	Fuel leached from matrix with HNO_3	Initial laboratory stage	ORNL development; no work with Th in fuel
Niobium Bearing Fuels				
Niobium dissolution	Proposed Nb clad fuel	Dissolve clad in HF-HNO_3 or react clad with Cl_2, HCl or HF gas	Preliminary laboratory tests	ORNL development; no fuel of this type has been made; development of process in anticipation of Nb fuel
Liquid Metal Fuels				
ThO_2-Bismuth separation	ThO_2-Bi slurry	ThO_2 separated from Bi by argon flotation, filtered and washed with Hg	Laboratory and small engineering tests	Work on process has been halted

Table B. Summary of Fluoride Volatility Processing

	Description of Fuel Treated	Brief Description of Process	Development Status	Remarks
Molten Fluoride Salt Fuels				
Fluoride volatility	$LiF-BeF_2-ThF_4-UF_4$ molten salt (also other molten fluorides that may contain NaF or ZrF_4)	Salt contacted at 500-600°C with F_2 to volatilize UF_6; UF_6 reduced to UF_4. Barren salt discarded to remove fission products	Pilot plant operated on irradiated fuel	ORNL and ANL development; all development has been with a fuel containing no Th; no process for recovering Th and decontaminated carrier salt
Zirconium-Type Solid Fuels				
Hydrofluorination	Zr-U-Th alloy; Zr-U alloy	Dissolve fuel in molten $NaF-ZrF_4$ bath by bubbling HF through bath; fluorinate to volatilize UF_6	Pilot plant operated on irradiated fuel	ORNL development; no development on fuels containing Th; no way to recover Th
Zircex	Zircaloy clad Zr-U alloy	Zircaloy clad and Zr removed by hydrochlorination with HCl gas at about 500°C; U converted to UCl_3, dissolved in a molten salt and fluorinated to UF_6; fission products remain in salt	Laboratory and engineering scale tests have been made	ORNL development; no development on fuel containing Th; no way to recover Th
Stainless Steel Type Fuel				
Direct chlorination-fluorination	Stainless steel clad UO_2	Remove clad with Cl_2 at about 600°C at same time volatilizing UCl_4; add HF at high temperature to convert chlorides to fluorides; add F_2 to volatilize UF_6	Laboratory and engineering scale experiments	ANL development; no development with Th present in fuel
Beryllium-Type Fuels				
BeO fuel dissolution	BeO-U-Th fuel	Dissolve fuel in molten fluoride salt by bubbling HF through melt	Scouting laboratory experiments	ORNL development; no enough work completed to allow evaluation of process; probably no way to recover Th
Tail-End Processes				
HF Dissolution	$LiF-BeF_2-ThF_4-UF_4$ molten salt	After fluoride volatility to remove UF_6, dissolve salt in 90% HF-10% H_2O to precipitate rare earths	Laboratory experiments	ORNL development; Th precipitates with rare earth fission products; alkali metals and alkaline earths cannot be separated from salt
Aqueous-NH_4F	$LiF-BeF_2-ThF_4-UF_4$ molten salt	After fluoride volatility to remove UF_6, treat salt with aqueous NH_4F to dissolve ThF_4	Laboratory scouting experiments	ORNL development; not successful in recovering Th, apparently LiF interferes
SbF_5-HF	$LiF-BeF_2-ThF_4-UF_4$	After fluoride volatility to remove UF_6, treat salt with SbF_5-HF solution to dissolve rare earths	Laboratory scouting experiments	ORNL development; it appears that ThF_4 is insoluble and can be separated from rare earths; more work needed
Cerium exchange	$LiF-BeF_2-ThF_4-UF_4$	After fluoride volatility to remove UF_6, treat salt with CeF_3 to precipitate more poisonous rare earths as solid solutions	Laboratory experiments	ORNL development; more poisonous rare earths replaced with less poisonous Ce; more development needed; can be applied without first using fluoride volatility

Table C. Summary of Pyrometallurgical Processing

	Description of Fuel Treated	Brief Description of Processing	Development Status	Remarks
Liquid Metal Extraction				
Zinc extraction	Th-U alloy	Dissolve alloy in Zn at 800-900°C; cool to about 500°C to precipitate Th-U-Zn intermetallic; fission products soluble in Zn are removed by filtration; evaporate Zn from intermetallic	Laboratory stage on irradiated fuel	Atomics International development; process does not give large decontamination
Zinc extraction	Th-Al alloy	Dissolve alloy in Zn at about 800°C; precipitate Th_2Zn_{17} by cooling to about 550°C; recover Th by evaporating Zn; fission product + Al extracted into Zn melt	Few laboratory experiments	Atomics International development; more data needed to evaluate process; decontamination factors low
Lead extraction	Th-U-Al alloy	Contact alloy with molten Pb at about 900°C at which temperature molten fuel and Pb are immiscible; extract fission products into Pb	Few laboratory experiments	Atomics International development; fission product extraction very poor; process not being seriously considered
Thallium extraction	Th-U-Al alloy	Contact alloy with molten Tl at about 925°C at which temperature molten fuel and Tl are immiscible; extract fission products into Tl	Few laboratory experiments	Atomics International development; fission product extraction very poor; process not being seriously considered
Magnesium extraction	Th-U alloy	Contact molten alloy with molten Mg at about 900°C; Mg extracts Th precipitating U; filter to recover U; Th precipitated and filtered from Mg as ThH_2	Laboratory experiments on unirradiated fuel	Atomics International development; Th and U recovery not very high; liquid metal filters require considerable development
Silver-magnesium extraction	Th-U alloy	Alternate to Mg extraction; Ag added to lower melting point		
Magnesium-salt extraction	Th-U alloy	Fuel dissolved in Mg from which U precipitates; Th-Mg solution contacted with molten $MgCl_2$-KCl-LiCl to extract fission products; U layer contacted with KCl-LiCl-Zn to extract fission products	Basic laboratory investigations of various steps	Iowa State development; steps in process not yet defined in laboratory
Fission Product Volatilization				
Drip melting	Th-U alloy	Alloy is slowly melted by induction heating; volatile fission products removed by vacuum system	Small-scale laboratory experiments	Atomic International development; low decontamination factors; Th and U cannot be partioned
Electrolytic Process				
Electro-refining	Th-U alloy or Th	Fuel electrolyzed in a molten KCl-NaCl bath; Th + U collects at molten Zn cathode	Laboratory scale experiments on irradiated material	Atomics International development; decontamination factors reasonably good; current and product recovery efficiencies low

Table D. Reactor Systems, Fuels and Processing Methods

Reactor System	Fuel	Processing Method
ThO_2 as a Dispersion in a Liquid		
Aqueous Homogeneous	UO_2SO_4-D_2O solution core	Process core and blanket together in Thorex after head-end step to recover D_2O
One-Region Slurry	ThO_2-UO_2-D_2O slurry or ThO_2-UO_2-H_2O slurry	Process by Thorex after head-end to recover D_2O
Liquid Metal Fuel Reactor (LMFR)	U-Bi solution core ThO_2-Bi slurry blanket	Core processed by fused salt extraction with NaCl-KCl-$MgCl_2$ eutectic. Blanket processed by Thorex after special head-end to separate ThO_2 and Bi
ThO_2 Powder or Pellets		
Spectral Shirt Control Reactor (SSCR)	ThO_2 compacted powder in Zircaloy tubes	Process fuel by Thorex after removal from Zircaloy tubes
Consolidated Edison Thorium Reactor (CETR) (Indian Point Power Reactor)	ThO_2-UO_2 pellets in stainless steel	Darex or Sulfex head-end plus Thorex processing
BORAX IV	ThO_2-UO_2 clad in aluminum	Dissolve in HNO_3 catalyzed by Hg^{++} followed by Thorex
Elk River	ThO_2-UO_2 pellets in stainless steel tubes	Darex or Sulfex head-end plus Thorex processing
CANDU	ThO_2-UO_2 powder compacted in stainless steel tubes	Darex or Sulfex head-end plus Thorex processing
Maritime Gas-Cooled Reactor (MGCR) and Proposed Gas-Cooled Reactor Experiment (GCRE) Fuel	ThO_2-UO_2 clad with BeO	Fuel could be processed by Thorex if a suitable head-end process for removing BeO cladding were developed. Laboratory experiments indicate that clad and fuel can be processed by fluoride volatility
Thorium Carbide (ThC or ThC_2) in Graphite		
Pebble Bed Reactor Experiment (PBRE)	ThC_2-UC_2 dispersed in graphite sphere; sphere coated with pyrolytic graphite or Si-SiC	Mechanical grinding followed by leaching with HNO_3 or combustion followed by leaching with HNO_3; dissolved fuel processed by Thorex
Advanced Epithermal Thorium Reactor (AETR)	ThC_2-UC_2 clad with stainless steel	No process development on such a fuel; perhaps could adopt shear-and-leach, Sulfex or Darex decladding procedures followed by fuming HNO_3 leach and Thorex
Philadelphia Electric Gas-Cooled Reactor	ThC_2-UC_2 in graphite matrix clad with graphite	Head-end of grind-leach or fuming HNO_3 dissolution followed by Thorex
Peach Bottom Power Reactor (HTGR)	ThC_2-UC_2 compacted in graphite enclosed in graphite tube	Head-end of grind-leach or fuming HNO_3 dissolution followed by Thorex
Turret Reactor	ThC_2-UC_2 dispersed in graphite	Head-end of grind-leach or fuming HNO_3 dissolution followed by Thorex

Table D - Continued

Reactor System	Fuel	Processing Method
Thorium Metal		
Sodium Graphite Reactor	Th-U metal alloy clad in stainless steel	Mechanical dejacketing followed by Thorex
Helium-Cooled, Direct Closed-Cycle Reactor	Th-U metal clad with stainless steel	Mechanical dejacketing followed by Thorex
Molten Salt		
Molten Salt Reactor Experiment (MSRE)	$LiF-BeF_2-ZrF_4-ThF_4-UF_4$ molten salt	Recover U by fluoride volatility; no developed process for recovering decontaminated thorium or other salt components
Molten Salt Converter Reactor (MSCR)	$LiF-BeF_2-ThF_4-UF_4$ molten salt	Recover U by fluoride volatility; no developed process for recovering decontaminated thorium or other salt components
Molten Salt Breeder Reactor (MSBR)	$LiF-BeF_2-UF_4$ molten salt in core; $LiF-BeF_2-ThF_4$ molten salt in blanket	Recover U from both core and blanket by fluoride volatility; no developed process for recovering decontaminated thorium or other components from either blanket or core

INTRODUCTION

This report is one of several that are being prepared to survey the use of thorium as a reactor fuel. The field of chemical processing of thorium, thorium compounds and alloys which might be used in breeder and converter reactors has been reviewed and is discussed herein. An attempt has been made to include a discussion of all chemical and physical forms of thorium that have been seriously or casually considered for reactor fuel. Emphasis has been placed on process description, performance, limitations and advantages, materials of construction, cost data (when available) and status of development. Some of the topics discussed have been researched quite completely and reported in large numbers of memoranda and other literature; on these, this review is only a summary. On some of the more incompletely investigated phases of thorium processing, practically all of the available information is included herein.

Other reports, to be issued under separate cover, are being prepared to discuss the metallurgy of thorium, thorium compounds and alloys, reactor physics of thorium, thorium fuel element development and the development of reactor systems for thorium fuels. These reports are intended to give background information and guidance to the Thorium Utilization Program.

AQUEOUS PROCESSES:

THE THOREX PROCESS

and

HEAD-END PROCESSES FOR THOREX

1.0 THOREX PROCESS

The Thorex process is an aqueous solvent extraction process developed to separate thorium, uranium and fission products from irradiated thorium metal and certain thorium compounds. The process is designed to give almost quantitative recovery of uranium and thorium, and to decontaminate so that the products can be handled directly. The decontamination and partition are accomplished in a series of extraction and stripping operations between an aqueous nitrate solution of the metals and an organic solvent, tributyl phosphate (TBP), in a kerosene diluent.

1.1 Description of Process

A process flowsheet for Thorex is given in Fig. 1.1. This flowsheet describes the steps for processing a Th-Al alloy, aluminum-clad thorium metal or thorium dioxide. Other chemical forms of thorium may be treated by this flowsheet; however, a head-end treatment might be necessary to secure the proper feed composition. These head-end processes are discussed in subsequent sections of this report. The flowsheet of Fig. 1.1 is the so-called co-decontamination flowsheet. A second flowsheet for the acid Thorex process is discussed in Section 1.2.

Feed Preparation. The aluminum-thorium feed material or ThO_2 is dissolved in 13 M HNO_3 in stainless steel equipment catalyzed by small concentrations of mercuric and fluoride ions, the former to catalyze the aluminum-nitric acid reaction and the latter the thorium-nitric acid reaction. The reaction occurs under refluxing conditions and may be carried out in either batch or continuous operation. The dissolver solution flows to a feed adjustment tank where the first solvent extraction column feed is prepared. Feed adjustment is a very important step in the over-all process because it is here that certain fission products and metallurgical impurities are conditioned to cause a minimum amount of trouble in subsequent operations. Fission product zirconium and ruthenium are converted to less extractable forms, and siliceous materials are dehydrated into a state which is less prone to produce emulsions.

In feed adjustment the solution is evaporated to remove all the free nitric acid and enough of the nitric acid from the hydrolysis of $Th(NO_3)_4$ and $Al(NO_3)_3$ to make the solution 0.2-0.4 M acid deficient.[1] Thorium and

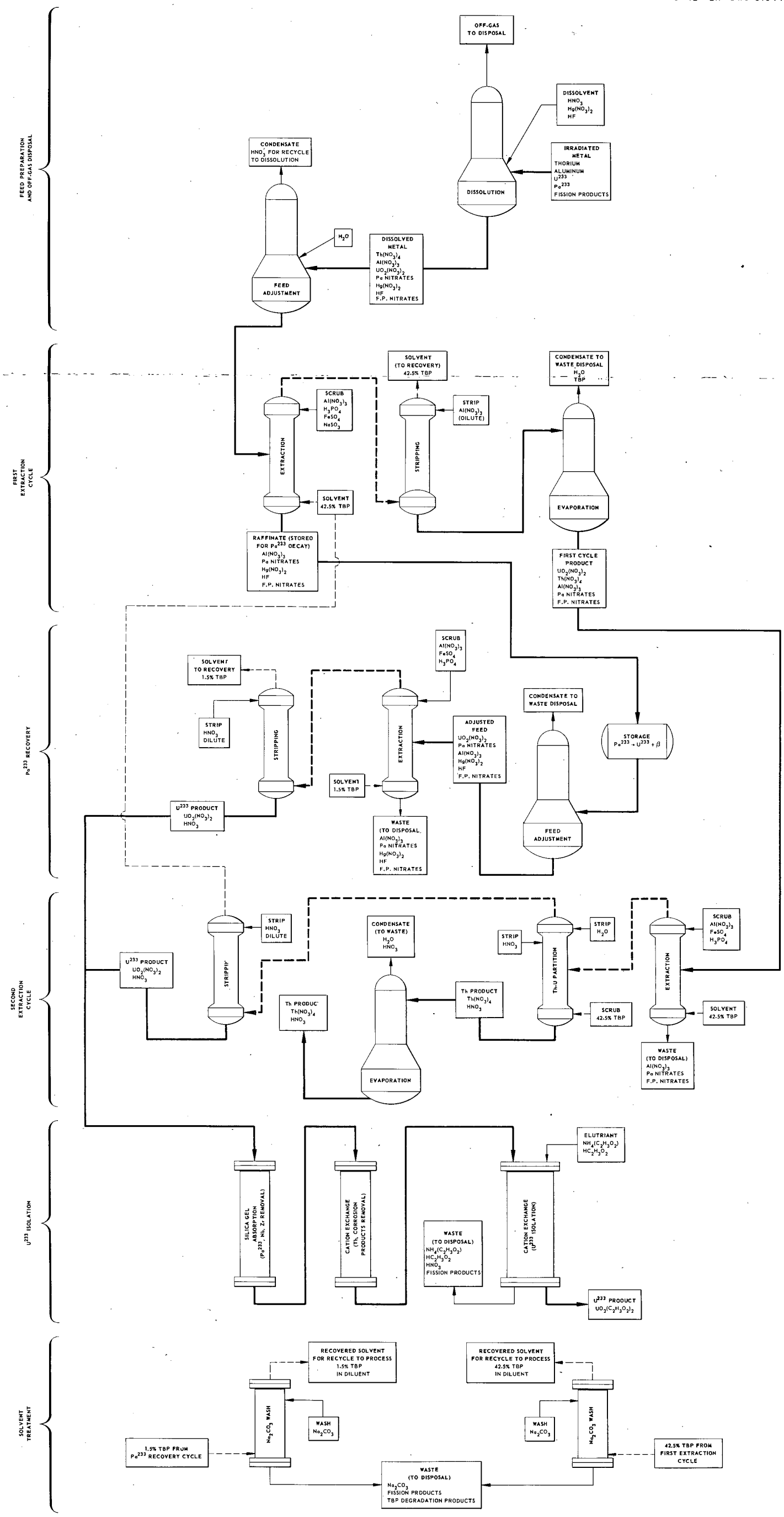

Fig. 1.1. Flow Diagram of Thorex Process for Short-Cooled (~40 Days) Irradiated Material.

aluminum molarities and acid deficiency are then adjusted to the desired values by the addition of water. The presence of fluoride ions in the feed requires that acid deficient conditions be employed so that the fluoride can be complexed by $Al(NO_3)_3$, otherwise stainless steel equipment would be seriously corroded. On the other hand, acid deficiency has the adverse effect of increasing thorium losses.

First Extraction Cycle --- Co-decontamination. The first solvent extraction cycle is called the co-decontamination cycle because thorium and uranium receive their primary decontamination at the same time. Thorium concentrations in the aqueous feed are normally adjusted to 1.0 - 1.5 M while the uranium concentration may vary over a wide range depending upon the irradiation history of the fuel. Uranium concentrations, however, are always much less than the thorium concentrations.

The feed solution enters near the midpoint of the extraction column and is contacted by a countercurrent organic solvent containing about 42.5 vol % TBP in kerosene. Thorium and uranium are extracted from the bulk of the fission products and protactinium which flow with the aqueous stream to waste retention for Pa-233 decay. Meanwhile Th and U pass through the scrubbing section of the column into the stripping column. The scrub solution is aqueous $Al(NO_3)_3$ containing low concentrations of ferrous and phosphate ions to enhance Cr and Pa removal.

The organic product of the extraction column is returned to the aqueous phase in the stripping column. The aqueous product is then evaporated and adjusted in concentration to make feed for the second extraction cycle.

Second Extraction Cycle---Partition. The second extraction cycle contains three columns which provide further decontamination and partitioning of thorium and uranium. Aqueous feed enters the extraction column at about its midpoint and is contacted by a stream of solvent entering at the bottom. Thorium and uranium are extracted by TBP and transported to the partition column. Fission products remain in the aqueous phase in the extraction column and are routed to waste disposal.

The partition column performs the separation of thorium and uranium from each other. The organic phase containing both metals is introduced about midway in the column for contact with an aqueous HNO_3 stream. The partition is accomplished by the proper regulation of concentrations and

flow ratios. The organic-to-aqueous distribution ratio is about ten times greater for uranium than for thorium. Consequently uranium is made to stay in the organic phase while thorium is stripped into the aqueous phase.

The organic phase containing uranium continues to a third column in which the uranium is returned to the aqueous phase. The aqueous product may then be evaporated to give a desired $UO_2(NO_3)_2$ product, or further decontamination may be accomplished in a cation exchange column.

Thorium leaves the Thorex plant as an acid solution of $Th(NO_3)_4$. After evaporation to remove entrained solvent, $Th(NO_3)_4$ is ready for conversion into the desired chemical state and shape for recycle to the reactor.

U-233 Isolation. If it is desired to isolate U-233 as uranyl acetate for ready conversion to some other form such as the oxide, a cation exchange column is used to absorb uranium from the nitrate solution. Usually this column is preceded by a silica gel column to remove Pa, Zr, and Nb and a small cation exchange column to remove traces of thorium. Uranium is eluted with acetic acid.

Pa-233 Recovery. When processing short-cooled thorium fuel, the aqueous raffinate from the first cycle extraction column contains appreciable quantities of Pa-233. In practically no case is it economic to discard this stream with this valuable parent material present. Since at this time there is no developed process for removing Pa, the waste stream is held in storage until most of the Pa has decayed, and the U-233 product is recovered by recycling the stream through solvent extraction. The first extraction waste is usually held for about 200 days for Pa decay; this is sufficient to reduce the overall uranium loss to about 0.1%. U-233 recovered from the recycle waste is practically isotopically pure U-233.

Waste Disposal. Aqueous wastes from Thorex are classified as high-level and low-level wastes. High-level waste is the raffinate of the co-decontamination cycle containing the bulk of the fission products. This waste is concentrated by evaporation, neutralized and stored for long periods before ultimate disposal to the environment. Low-level wastes comprise the second extraction cycle raffinate, laboratory effluent, floor washings, etc.; these are retained for much shorter periods in ponds or lagoons and may then be drained into a flowing stream.

Gaseous wastes, resulting mainly from the dissolution of feed material, are filtered to remove particulates, diluted with large volumes of air and dispersed in the atmosphere from a tall stack. Normally iodine removal equipment is not necessary because most of it decays during the initial cooling period.

Solvent Recovery. After each cycle through the extraction columns, the TBP-kerosene mixture must be reconditioned for reuse. Radiation induced degradation products such as monobutyl and dibutyl phosphates and organic acids are removed with a Na_2CO_3 wash in a packed column. The washing operation also removes most of the entrained fission products. Spent carbonate is used to neutralize the aqueous first and second cycle wastes.

1.2 Acid Thorex Process

The acid Thorex process has been developed by Rainey and Moore[2] to obviate the use of $Al(NO_3)_3$ salting agent and the corresponding large waste volumes associated with the first Thorex flowsheet. Acid Thorex is in effect a modification of the feed adjustment and first extraction step to permit the use of concentrated HNO_3 as the salting agent. The modified extraction step is shown in Fig. 1.2; numbers inserted in the arrows denote relative volumes of the several streams.

Organic product from the scrub section has been decontaminated by factors up to 10^5 and can be further decontaminated and partitioned by established Thorex procedures. Aqueous extraction waste is routed to a distillation system for HNO_3 recovery before going to waste storage. The volume of waste is only one-tenth that of the conventional $Al(NO_3)_3$ salted Thorex process.

1.3 Thorex Process Performance

Decontamination factors[1,2] and process losses for thorium and uranium are given in Tables 1.1 and 1.2. These values are for feed material that had been cooled for 60-100 days prior to processing; consequently, the figures might be optimistic for short-cooled material in a thorium breeder or converter cycle. Thorex experience on short-cooled feed material (30 days or less) has been rather limited because existing facilities were not designed for such radioactive material. More recent experience with Thorex pilot plant operation[3] with long-cooled material has indicated that over-all uranium losses as low as 0.05% or less may be obtained.

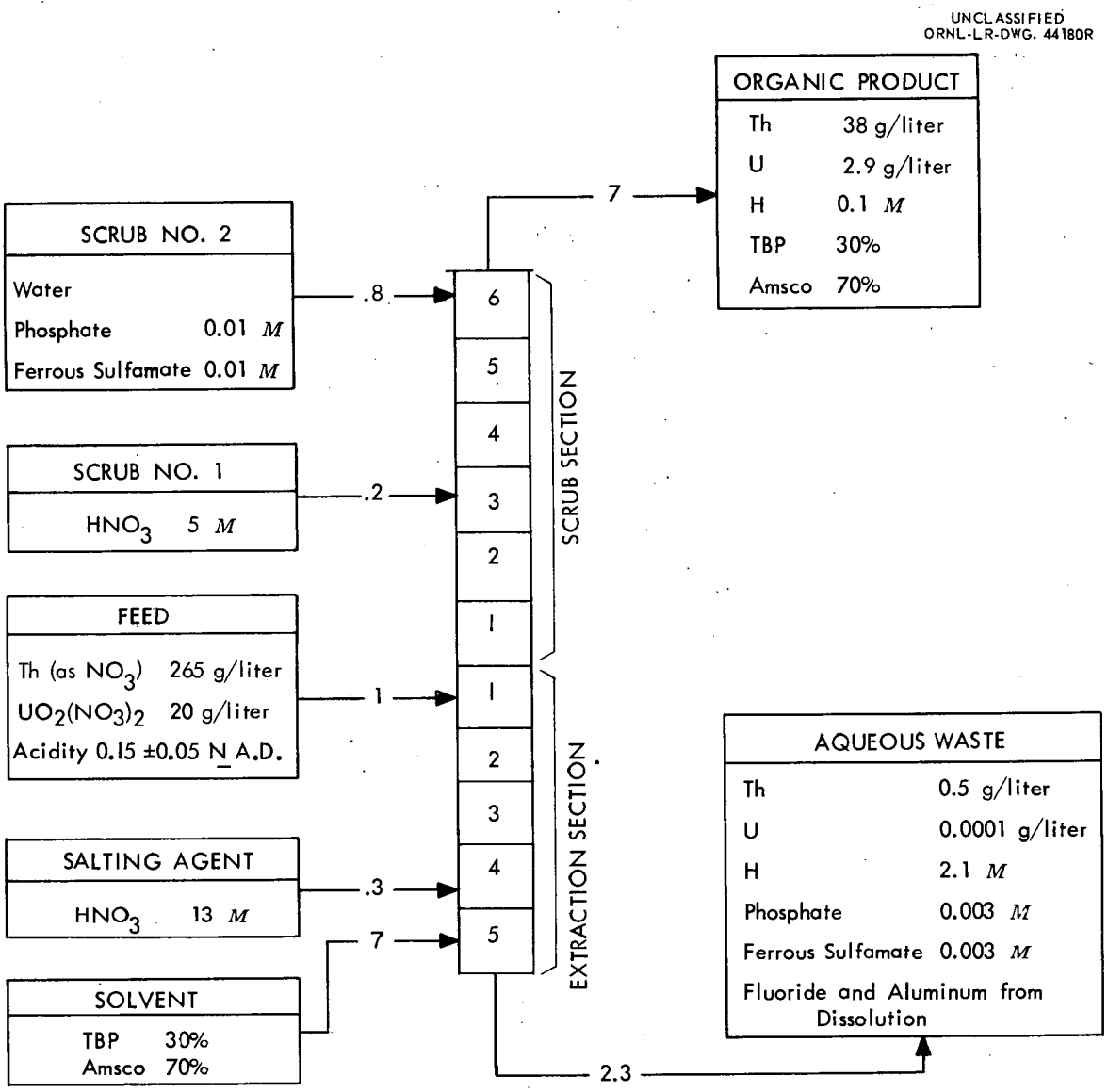

Fig. 1.2. Acid Thorex Flowsheet for Extraction of Uranium and Thorium from Solutions of Consolidated Edison Fuel.

Table 1.1. Decontamination Factors in Thorex Process

	First Cycle	Second Cycle		Over-all	
	Th-U	Th	U	Th	U
		Aluminum Nitrate Salted Thorex			
Gross gamma	500	100	600	5×10^4	3×10^5
Pa gamma	2000	10	100	2×10^4	2×10^5
Ru gamma	50	400	2000	2×10^4	1×10^5
Zr-Nb gamma	500	150	600	7×10^4	3×10^5
Total rare earth beta	10^4	100	1000	1×10^6	1×10^7
	Acid Thorex				
Pa gamma	1000				
Ru gamma	1000				
Zr-Nb gamma	5000				
Total rare earth beta	10^5				

Table 1.2. Thorium and Uranium Losses in the Thorex Process

	Loss (% of total)					
	First Cycle		Second Cycle		Over-all	
	Th	U	Th	U	Th	U
Extraction	0.5	0.04	0.9	0.02	1.4	0.06
Partition column			0.01	0.15	0.01	0.15
Stripping column	0.03	0.01	(a)	(a)	0.03	0.01
Isolation						0.01

(a) No loss since solvent is returned to first cycle without treatment

1.4 Processing Cost

Capital investment in a Thorex plant has been studied by Ferguson[4] and later by Guthrie[5] who related the thorium throughput to the plant investment. Guthrie's work is an extension of the work of Ferguson design to include a large-scale, on-site processing facility. Guthrie's and Ferguson's results are given in Fig. 1.3. These studies are based upon operating experince with the Thorex pilot plant at ORNL; Guthrie modified Ferguson's results to account for short-cooled blanket material from a breeder system.

Recent breeder reactor evaluations[7] have developed total fuel cycle costs for a 1000-Mwe, two-region, aqueous homogeneous reactor using ThO_2 pellets in the blanket. These results show that the Thorex plant cost contributes from 70-80% to the total fuel cycle cost.

1.5 Limitations and Problems

From an operational viewpoint the Thorex process is excellent for giving high recovery and high decontamination from fission products of both thorium and uranium. However, the process is a relatively complicated solvent extraction operation and contributes heavily to the total fuel cycle cost. Consequently, as the breeder studies[7] pointed out, attaining total fuel cycle costs much below 1 mill/kwhr are difficult. Any improvement in Thorex technology that appreciably affected its cost would have a marked effect on the total fuel cycle cost.

Short-Cooled Feed Material. Technology in Thorex operations has not developed to the point of processing short-cooled (20 days or less) thorium blanket material, and, in a one-region system containing more green fission products, this cooling time would probably have to be advanced to about 60 days. The problems are those of heat dissiplation and solvent degradation from radiation. Radiation damage to solvent forms monobutyl and dibutyl phosphates which, being more soluble in the aqueous phase than tributyl phosphate, carry complexed uranium to the aqueous waste. On the other hand, economics requires that cooling times be as short as possible to minimize inventory charges.

Heavy Isotope Build-up. The problems associated with the build-up of heavy isotopes of thorium and uranium cannot be ignored in a reactor that recycles both thorium and uranium. The important heavy isotopes are U-232, Th-228 and to some

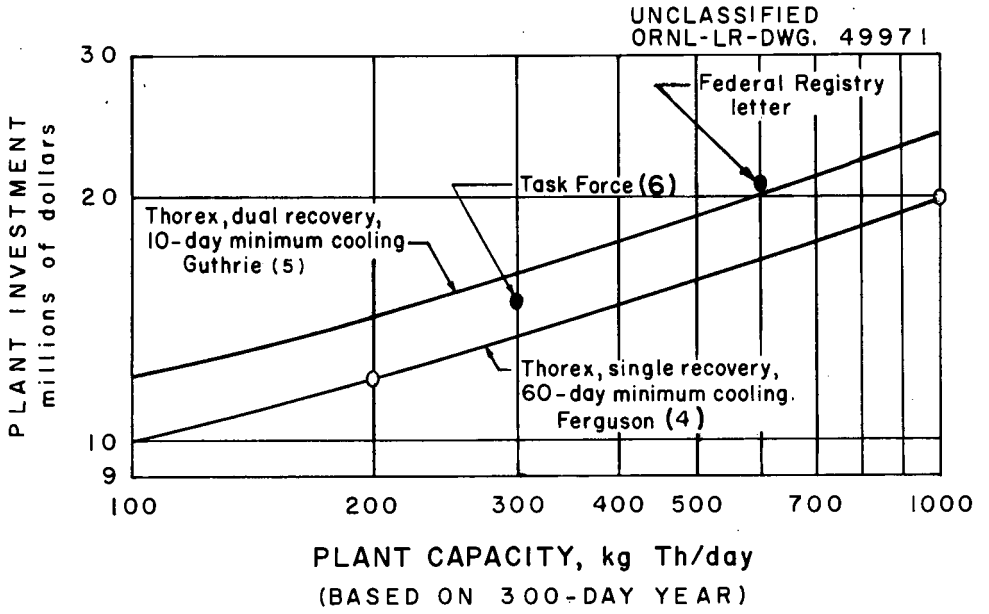

Fig. 1.3. On-Site Thorex Processing Plant Investment Vs Capacity. Uranium product as $UO_2(NO_3)_2$. Cost includes dissolution, decontamination and reconversion to ThO_2 pellets.

extent Th-234. Both U-232 and Th-228 result from an n, 2n reaction on Th-232 as follows:

$$\text{Th-232} \xrightarrow[n,2n]{} \text{Th-231} \xrightarrow[\beta]{25.6\ hr} \text{Pa-231} \xrightarrow[n,\ \gamma]{} \text{Pa-232} \xrightarrow[\beta]{1.32\ d} \text{U-232} \xrightarrow[\alpha]{74\ yr} \text{Th-228} \xrightarrow[\alpha]{1.91\ yr}$$

The stable end product of this chain is Pb-208. Although the cross section for the n, 2n reaction is only a few millibarns, for long irradiation periods the U-232 and Th-228 build-up can be significant. Both of these nuclides decay into γ-emitting intermediate products, e.g., Bi-212 and Tl-208, which create radiation hazards in both Thorex products.

Since Thorex cannot distinguish between isotopes, there is no way to process either of the nuclides mentioned above. The significance in the fuel cycle is that both thorium and uranium products have to be handled remotely, complicating fuel refabrication particularly if the fuel is a solid. The activity of the final product may be proportioned somewhat between Th and U by regulating the cooling period before processing. A short cooling period would not allow much of the 74-year U-232 to decay and would therefore route the bulk of the activity to the uranium product; whereas, a long cooling period would allow more Th-228 to form and consequently greater Th product contamination.

Waste Disposal. Large volumes of highly radioactive aqueous wastes that require long storage periods are produced in Thorex. The recently developed acid Thorex process[2] offers considerable improvement by reducing waste volumes by a factor of ten. However, it should be recognized that in a large power-producing system waste volumes need to be minimized for economy of storage.

Feed Preparation Difficulties. Perhaps feed preparation difficulties should not be listed as a limitation of the Thorex process, because when operating on thorium metal or ThO_2 feed for which the process was designed there are no unusual difficulties. However the fact is that the process requires aqueous nitrate chemistry and, since Thorex is the only well-developed process for separation of Th, Pa, U, and fission products, it is necessary to require the process to accept all forms of thorium fuels. Consequently, for a large number of proposed fuels, it is necessary to precede Thorex with a chemically

or mechanically involved head-end treatment just to prepare the fuel for solvent extraction. These head-end processes can contribute appreciably to the over-all processing cost.

1.6 Status of Development

The Thorex process for metallic thorium has been developed through the pilot plant stage at ORNL, and considerable operating experience has been obtained with this plant. The pilot plant is designed for use of $Al(NO_3)_3$ as the salting agent; however, modifications to use the more recently developed acid Thorex flowsheet should not be difficult. The process has performed to give high product yields with large fission product decontamination factors; these were discussed in Section 1.3.

The Thorex pilot plant is now in stand-by condition. In the future this processing will probably be done at the Idaho Chemical Processing Plant.

REFERENCES

(References for Thorex Process)

1. F. R. Bruce, "The Thorex Process," Symposium on the Reprocessing of Irradiated Fuels, held at Brussels, Belgium, May 20-25, 1957, TID-7534, Book 1, p. 180.

2. R. H. Rainey and J. G. Moore, "Laboratory Development of the Acid Thorex Process for Recovery of Thorium Reactor Fuel," Nuc. Sc. Eng. 10, 367-371 (1961).

3. W. T. McDuffee, Oak Ridge National Laboratory, personal communication.

4. D. E. Ferguson, Fuel Cycle Cost for Aqueous Homogeneous Reactors, ORNL CF-59-6-87 (June 2, 1959).

5. C. E. Guthrie, On-Site Processing Plant Investment Estimates for Heterogeneous Thermal Breeder Studies, ORNL CF-60-5-73 (May 20, 1960).

6. Fluid Fuel Reactors Task Force, Report of the Fluid Fuel Reactors Task Force, TID-8507 (Feb. 1959).

7. L. G. Alexander, et al., Thorium Breeder Reactor Evaluation. Part 1. Fuel Yield and Fuel Cycle Costs in Five Thermal Breeders, ORNL CF-61-3-9 (April 1961).

2.0 DAREX-THOREX PROCESS

The Darex-Thorex process is a head-end treatment to prepare stainless steel clad ThO_2-UO_2 fuel for solvent extraction in the Thorex process. Darex consists of two distinct dissolution operations, the first to remove the stainless steel clad and a second to dissolve the oxide core, followed by a chloride stripping operation and a core solution feed adjustment step. The adjusted feed is an aqueous nitrate solution suitable for feed to the Thorex solvent extraction process described in Section 1.0.

A flowsheet for the Darex-Thorex process for treating Consolidated Edison Thorium Reactor (CETR) fuel is given in Fig. 2.1. The several steps in the process are discussed below.

2.1 Process Description

The Darex-Thorex process has been developed at ORNL[1-5] with supplementary work at Batelle Memorial Institute[6,7] to process irradiated ThO_2-UO_2 pellets clad with type 304 stainless steel. Fuel used in the development was the Consolidated Edison fuel referred to above. This fuel is pelletized and sintered ThO_2-UO_2 cylindrical shapes about 2.1 cm long by 0.66 cm diameter.[1] Each pellet has a 20-mil cladding of type 304 stainless steel.

Stainless Steel Decladding. The stainless steel clad is removed by dissolving in boiling dilute aqua regia, 5M HNO_3 - 2M HCl, to yield a solution that is about 60 gm stainless steel per liter. Normally about 3 hours are required to dissolve the clad. Although UO_2 reacts with nitric acid, its solubility during decladding is quite low because ThO_2 is almost unreactive in nitric acid unless catalyzed. Even though some UO_2 dissolves in the decladding solution, it does not necessarily mean a product loss because the uranium can be extracted by contacting the solution after chloride removal with 30% tributyl phosphate in AMSCO.[1]

The decladding solution is drained to a chloride removal-acid recovery operation and the bare pellets are washed free of chloride solution.

Core Oxide Dissolution. The mixed oxide pellets are then contacted with regular Thorex dissolver solution, 13 M HNO_3 - 0.4 M NaF - 0.1 M $Al(NO_3)_3$, for complete dissolution. Fluoride ion is present to catalyze thorium dissolution, and aluminum ion is added to minimize vessel (titanium) corrosion. The reaction is carried out at boiling temperature and requires 25 hours or more for completion.[8] The dissolution rate is a function of the pellet density, and the

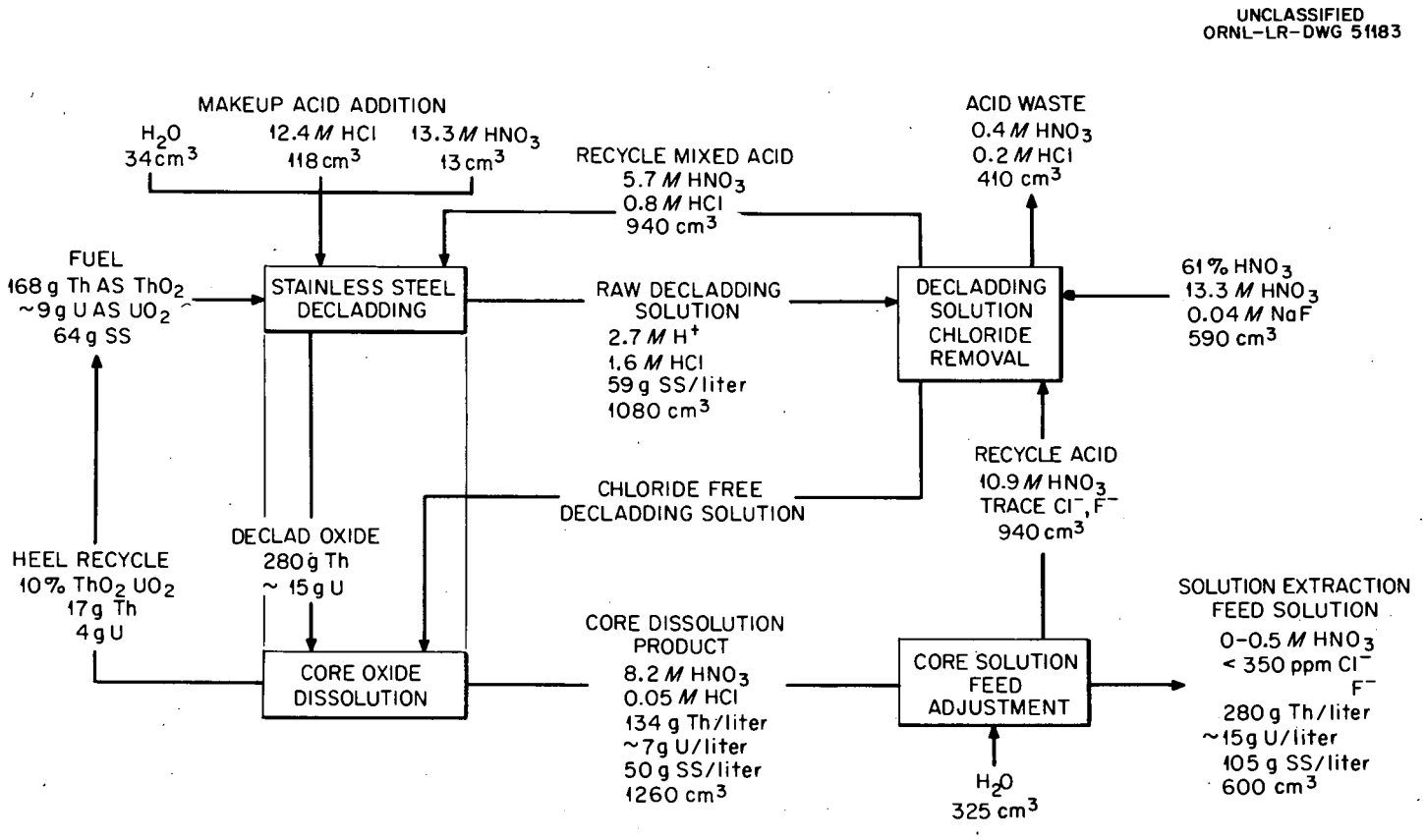

Fig. 2.1. Flowsheet of Darex Process for CETR Fuel.

closer the pellet is to theoretical density the longer the dissolution time. Rates in the range 16 - 2 mg/cm^2 min have been observed[8] for pellets having densities 60 - 94% of theoretical density.

Chloride Stripping from Decladding Solution. Raw decladding solution is drained from the decladding operation to a chloride stripping tower where either NO_2 gas or HNO_3 vapor[4] is used to sparge HCl from the solution. Chloride ion must be removed before the solution is routed to further process operations (e.g., solvent extraction) because of its detrimental effect on stainless steel process equipment. A portion of the HCl and HNO_3 can be recovered for reuse. If the uranium content of the chloride-free solution is negligible, the stripper product is disposed of as waste.

Feed Adjustment. Feed adjustment consists of evaporating sufficient HNO_3 to make the core solution from 0.1 - 0.4 M acid deficient and adjusting the Th concentration to about 1.0 M. The Thorex process is then used to recover decontaminated Th and U as aqueous nitrate solutions.

Gaseous Reaction Products. The reaction of aqua regia and stainless steel results in numerous gaseous products of which N_2, NOCl and NO_2 are most prevalent. Two typical analyses are given in Table 2.1. The oxides of nitrogen and HCL can be almost entirely absorbed in a reflex condenser allowing only the elemental gases to be exhausted to the atmosphere after dilution with large volumes of air.

Dissolution of the core pellets produces primarily NO, NO_2, and N_2. Most of the nitrogen oxides can be absorbed in a reflex condenser.

2.2 Process Performance

Uranium and thorium recovery from Darex-Thorex head-end treatment is quantitative because only gaseous waste products are removed from the system (see Fig. 2.1). Dissolver solutions in all instances flow quantitatively into solvent extraction.

In experiments with unirradiated fuel, uranium and thorium dissolved in the decladding operation were within tolerable limits being about 0.04 wt % and 0.02 wt %, respectively, in 1 to 3 hours contact. However, losses[9] from irradiated pellets were much greater, being as large as 3 wt % for U and 0.2 wt % for Th. Irradiated pellets tended to fracture and crumble exposing more surface to the decladding solution. The amount of metal dissolved was also inversely proportional to the percentage theoretical density and was increased by the presence of air in the dissolver.

Table 2.1. Gaseous Reaction Products[8] from the Dissolution of Type 304 Stainless Steel in Boiling 5 M HNO_3 - 2 M HCl

	Volume %	
	Sample 1	Sample 2
N_2O	2.0	2.3
NO	2.2	3.6
NO_2	12.2	16.3
NOCl	45.6	41.9
HCl	2.9	3.6
Cl_2	4.4	2.5
H_2	0.2	0.2
N_2	27.5	28.3
H_2O	3	3

2.3 Process Limitations

Because of the relatively large solubility[10] of U and Th in Darex-Thorex decladding solution, the potential advantage of segregating the stainless steel clad from the fuel disappeared, and decladding solution must be routed through solvent extraction. The combination of ThO_2-UO_2 and stainless steel forms a rather intractable complex that requires highly corrosive dissolution reagents; reaction rates are slow.

The Darex-Thorex operation is an involved treatment just to prepare fuel for solvent extraction. The two dissolutions with different reagents plus a chloride stripping and acid recovery system might add appreciably to fuel processing cost.

A survey by Warren[5] has revealed that vapor-phase explosions are a definite possibility in Darex-Thorex. Reactions of hydrogen with nitrogen oxides, NOCl and Cl_2 are highly exothermic and mixtures of these gases are explosive over a wide range of concentrations. However, the volume of H_2 evolved in Darex dissolution is relatively small.

2.4 Construction Materials

Laboratory experiments at ORNL have been conducted in tantalum equipment, and corrosion studies at Batelle Memorial Institute[7] evaluated titanium as a

construction material. Both tantalum and titanium appear to be satisfactory dissolver materials; however, no corrosion rates have been determined for tantalum. Titanium corrosion rates were 5 - 10 mils/month.

2.5 Processing Cost

A Darex-Thorex cost estimate was prepared by ORNL Chemical Technology Division personnel[11] for a small plant to be installed in an existing building. A capital cost of $750,000 was estimated for a 6 - 8 kg U/day plant. No building or ventilation costs were included in this figure.

2.6 Status of Development

The Darex-Thorex process has been demonstrated in both hot and cold laboratory scale experiments. Also some small-scale engineering studies have been made on each of the unit operations of the process. No large-scale engineering studies or pilot plant operation are planned.

REFERENCES

1. L. M. Ferris and Arlene H. Kibbey, Sulfex-Thorex and Darex-Thorex Process for the Dissolution of Consolidated Edison Power Reactor Fuel: Laboratory Development, ORNL-2934 (Oct. 26, 1960).

2. L. M. Ferris and Arlene H. Kibbey, Miscellaneous Experiments Relating to the Processing of CETR Fuel by Sulfex-Thorex and Darex-Thorex Processes, ORNL-3143 (Aug. 16, 1961).

3. L. M. Ferris, Decladding of Consolidated Edison Power Reactor Fuel by Sulfex and Darex Processes: Cyclic Dissolution Experiments, ORNL-2822 (Jan. 13, 1960).

4. E. L. Nicholson, Low Temperature Chloride Stripping Darex Flowsheets ("Poor Man's Darex"), ORNL CF-61-9-33 (Sept. 18, 1961).

5. K. S. Warren, Survey of Potential Vapor-Phase Explosions in Darex and Sulfex Processes, ORNL-2937 (Dec. 27, 1960).

6. R. A. Ewing, H. A. Brugger, and D. N. Sunderman, Dissolution of Irradiated Consolidated Edison Power-Reactor Fuel by the Sulfex and Darex Processes, BMI-1427 (Mar. 10, 1960).

7. C. E. Peterson, P. D. Miller, J. D. Jackson, and F. W. Fink, Construction Materials for Various Head-End Processes for the Aqueous Reprocessing of Spent Fuel Elements, BMI-1375 (Aug. 28, 1959).

REFERENCES - cont'd

8. F. L. Culler, et al., Chemical Technology Division Annual Progress Report for Period Ending August 31, 1960, ORNL-2993 (Sept. 23, 1960).

9. T. A. Gens, Consolidated Edison Fuel Losses on Exposure to Irradiated and Aerated Sulfex and Darex Decladding Solutions, ORNL-3023 (Apr. 18, 1961).

10. F. L. Culler, et al., Chemical Technology Division Annual Progress Report for Period Ending May 31, 1961, ORNL-3153 (Sept. 14, 1961).

11. B. F. Bottenfield, Oak Ridge National Laboratory, personal communication (Nov. 16, 1961).

12. R. E. Blanco, et al., "Chemical Processing of Power and Research Reactor Fuels at Oak Ridge National Laboratory," Proceedings of the AEC Symposium for Chemical Processing of Irradiated Fuels from Power, Test and Research Reactors held at Richland, Washington, October 20-21, 1959, TID-7583, 234-306 (Jan. 1960).

13. R. E. Blanco, Chemical Technology Division Chemical Development Section B Monthly Progress Report, September 1960, ORNL CF-60-10-91 (Jan. 19, 1961).

14. R. E. Blanco, Chemical Technology Division Chemical Development Section B Monthly Progress Report, October 1960, ORNL CF-60-11-87 (Feb. 14, 1961).

15. R. E. Blanco, Chemical Technology Division Chemical Development Section B Monthly Progress Report, November 1960, ORNL CF-60-12-99 (Apr. 6, 1961).

16. R. E. Blanco, L. M. Ferris, and D. E. Ferguson, Aqueous Processing of Thorium Fuels, ORNL CF-61-6-14 (June 22, 1961).

3.0 SULFEX-THOREX PROCESS

The Sulfex-Thorex process has been developed in competition with the Datex-Thorex process as a head-end treatment for stainless steel clad ThO_2-UO_2 fuels. Development of this process was carried out at ORNL simultaneously with Darex-Thorex development because it could not be anticipated which of the two processes would be better for the stainless steel clad fuel.

Sulfex-Thorex prepares stainless steel clad ThO_2-UO_2 fuel for aqueous solvent extraction (Thorex) by two distinct dissolving operations. First, the stainless steel clad is removed by dissolution in 6 M H_2SO_4, and, secondly, the mixed oxide core is dissolved in concentrated HNO_3. Process development was carried out using Consolidated Edison Thorium Reactor fuel. The fuel[1] is in the shape of small cylinders about 2.1 cm long by 0.66 cm diameter. The uranium content is in the range 2 to 8 wt %.

3.1 Process Description

A schematic flowsheet of the Sulfex-Thorex process is presented in Fig. 3.1.

Decladding. The CETR fuel pellets are enclosed in a 20-mil-thick type 304 stainless steel clad. The clad is removed by contacting the pellets with boiling 6 M H_2SO_4 for approximately 6 hours. The solution is then diluted to about 4 M H_2SO_4 to minimize the possibility of stainless steel precipitation. The solubility of stainless steel is about 86 g/ℓ in 4.5 M acid but only about 45 g/ℓ in 10 M acid.[1] The decladding solution is drained from the core pellets which must be washed clean of sulfate to avoid complication in the core dissolution. The stainless steel-laden solution is sent to waste.

Core Oxide Dissolution. The mixed oxides are dissolved in Thorex dissolver solution, 13 M HNO_3 - 0.04 M NaF - 0.1 M $Al(NO_3)_3$, under refluxing conditions. The trace of fluoride ion is added to catalyze the Th-HNO_3 reaction, and aluminum ion is present to minimize corrosion of the titanium or Ni-o-nel vessel. From 25 to 40 hours are required to dissolve the pellets.

Variables[1] affecting the rate of dissolution are nitric acid concentration, aluminum concentration, pellet density, particle size, sulfate concentration and fluoride concentration. The rate is about optimum with 13 M HNO_3 and 0.06 - 0.07 M F^-; however, fluoride ion is normally maintained at a lower value to prevent excessive corrosion in the dissolver. Also, with the higher F^- concentration there is danger of precipitating ThF_4. Both sulfate and aluminum ions

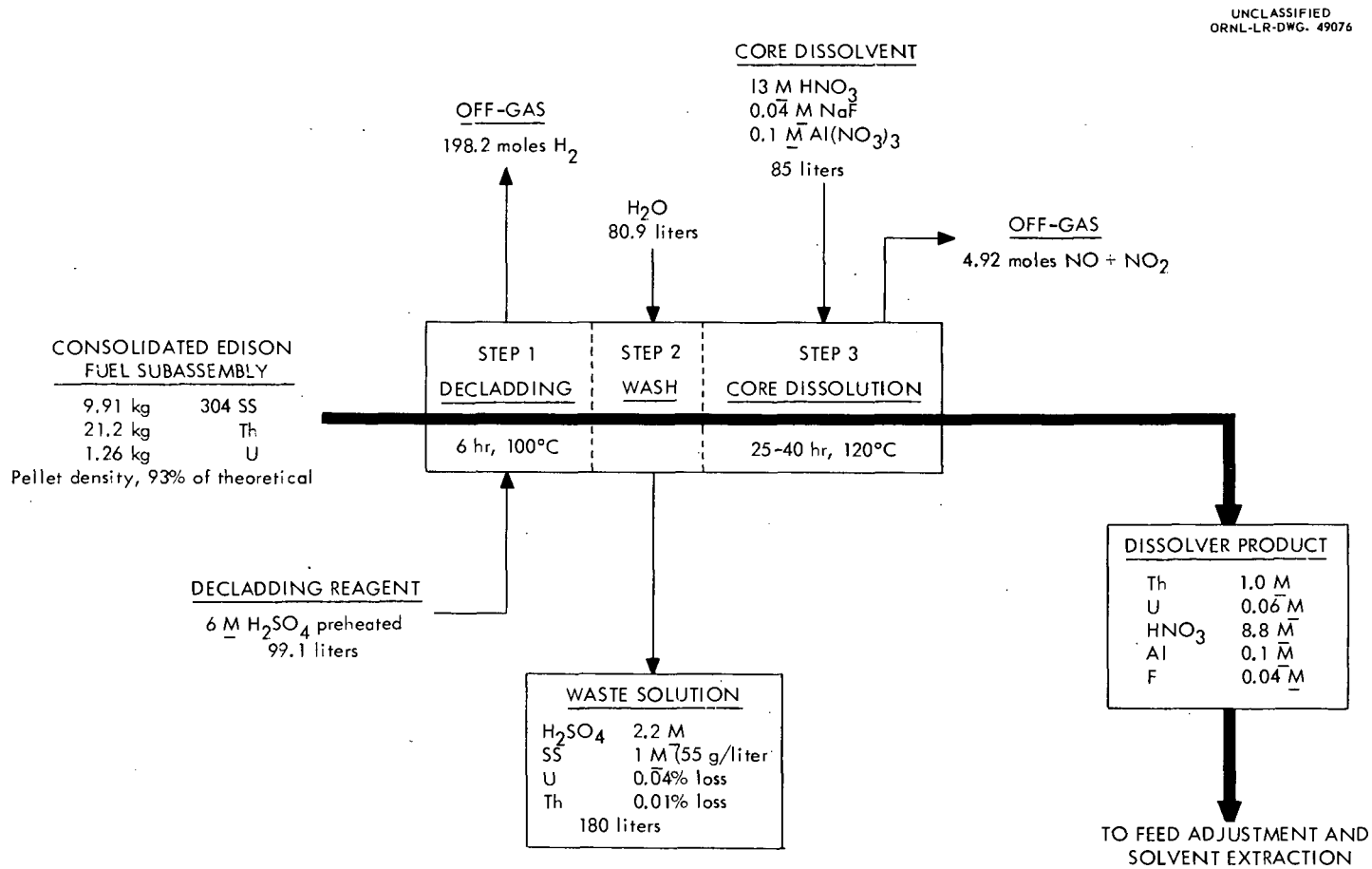

Fig. 3.1. Decladding and Dissolution of Consolidated Edison Reactor Fuel by the Sulfex-Thorex Process.

have an adverse effect on the dissolution rate. Sulfate should be thoroughly removed in the wash following decladding; some aluminum, however, must be employed to control fluoride corrosion of the equipment.

The most important variable affecting the dissolution rate is pellet density with particle size also being quite important. Both of these quantities determine the surface-to-mass ratio which directly affects the dissolution rate. Consequently, high density pellets dissolve more slowly than low density pellets, and mechanical crushing will increase the rate. As would be expected, the dissolution rate increases toward the end of a dissolution run because of the increased surface-to-mass ratio.[2]

Irradiation apparently has no effect on the rate of dissolution.

Feed Adjustment. The dissolver product is evaporated to an HNO_3 deficiency of 0.1 - 0.4 M and adjusted to about 1 M Th by addition of water. The solution is then suitable feed for the Thorex process which recovers decontaminated Th and U as nitrate solutions. The Thorex process is described in Section 1.0.

Gaseous Reaction Products. Only H_2 is evolved in the dissolution of the stainless steel clad in H_2SO_4. This gas can be vented to the atmosphere after dilution below the explosive limit with air, or the gas might be burned to water. Core dissolution results primarily in NO, NO_2 and N_2 off-gas with minor concentrations of other nitrogen oxides. Most of the nitrogen oxides can be absorbed in a reflux condenser.

3.2 Process Performance

Product losses in Sulfex-Thorex occur in the decladding operation. Since the stainless steel-H_2SO_4 solution must be sent to waste storage, it is mandatory that the solubility of mixed oxide core material be quite small. Uranium and thorium losses to Sulfex solutions have been studied rather thoroughly by Ferris and co-workers,[3,4,5] and the data indicate that uranium losses will probably be no greater than 0.4% and thorium losses no greater than about 0.2%. Selected values[5] for several decladding conditions are given in Table 3.1. Both air and irradiation increase the solubility.

3.3 Process Limitations

Processing conditions in Sulfex-Thorex, particularly in the decladding step, must be carefully controlled to avoid excessive metal loss in the decladding waste. Prolonged contact of decladding solution with core oxides

Table 3.1. Uranium and Thorium Losses to Boiling Sulfex Decladding Solution

Pellets: 93% theoretical density
ThO_2-UO_2 (94-6 wt %)
Type 304 stainless steel clad

Exposure time (hours)	1	3	10	25	30
			% Loss		
Uranium					
Untreated	.010	.017	.05	.14	.18
Aerated	.19	.29	.41	.57	.62
Irradiated	.025	.086	.30	.75	.89
Thorium					
Untreated	(a)	.025	.07	.15	.15
Aerated	.08	.19	.19	.19	--
Irradiated	(a)	.03	.11	.22	.22

(a) Below measurable concentration

appreciably increases the loss. Likewise shattering of irradiated core material increases the loss.

After each decladding operation, the core oxides and dissolver must be effectively washed to remove all sulfates because of their adverse effect on core dissolution rate. Also, it is equally important to remove all nitrates from the dissolver before beginning the next decladding operation. Nitrates make stainless steels passive to attack by H_2SO_4. This phenomenon has also been observed[6] with stainless steel type elements from water-cooled reactors. A thin oxide film on the surface made the metal passive to H_2SO_4. Depassivation may be accomplished by initiating the decladding with more concentrated H_2SO_4 (12 - 15 M), with small additions of formic acid or by adding an iron base alloy that is not passive to H_2SO_4.

Large volumes of H_2 are evolved in decladding, presenting the usual H_2-O_2 explosion hazards.[7]

3.4 Construction Materials

Construction materials for the Sulfex-Thorex dissolver that show promise of giving satisfactory service are Ni-o-nel, Carpenter 20 Cb and Illium R.

Of these, Ni-o-nel has been most completely tested[8] and is perhaps the best. Corrosion rates of a Ni-o-nel dissolver in continuous service will probably be about 5 mils per month. With proper heat treatment of a finished dissolver, localized attack on Ni-o-nel should not be a problem.

Carpenter 20 Cb should have about the same corrosion characteristics, 4 - 5 mils per month, as Ni-o-nel. However, Carpenter 20 Cb is subject to stress-corrosion cracking in boiling 6 M H_2SO_4.

Illium R showed corrosion rates of 3 - 6 mils/month in Sulfex and Thorex dissolver solutions. The principal fault with this alloy was that it was subject to intergranular attack in the Thorex reagent due to carbide precipitation around welds. A stabilized form of the alloy was not available for test.

3.5 Processing Costs

A comparison of the capital investment in a Sulfex-Thorex head-end process with that of a mechanical chop-leach head-end has been made by Adams.[9] It was estimated that the Sulfex treatment would cost about $15.78 per kg U processed. The plant used in this estimate was to have a capacity of 2.66 tonnes U/day.

3.6 Status of Development

Investigations of the Sulfex-Thorex process have been completed on both laboratory and engineering scale, and the process has been demonstrated for a particular reactor fuel (Consolidated Edison Thorium Reactor).

3.7 Future Work

No additional work is planned for Sulfex-Thorex. Sufficient data are available for processing plant design if the extrapolation in capacity is not great.

REFERENCES

1. L. M. Ferris and Arlene H. Kibbey, Sulfex-Thorex and Darex-Thorex Process for the Dissolution of Consolidated Edison Power Reactor Fuel: Laboratory Development, ORNL-2934 (Oct. 26, 1960).

2. F. L. Culler, Chemical Technology Division Annual Progress Report for Period Ending May 31, 1961, ORNL-3153 (Sept. 14, 1961).

3. L. M. Ferris and Arlene H. Kibbey, Miscellaneous Experiments Relating to the Processing of CETR Fuel by Sulfex-Thorex and Darex-Thorex Process, ORNL-3143 (Aug. 16, 1961).

4. L. M. Ferris, Decladding of Consolidated Edison Power Reactor Fuel by Sulfex and Darex Processes: Cyclic Dissolution Experiments, ORNL-2822 (Jan. 13, 1960).

5. T. A. Gens, Consolidated Edison Fuel Losses on Exposure to Irradiated and Aerated Sulfex and Darex Decladding Solutions, ORNL-3023 (Apr. 18, 1961).

6. T. A. Gens, Sulfex Process: Depassivation of Stainless Steel, ORNL-2785 (Nov. 6, 1959).

7. K. S. Warren, Survey of Potential Vapor-Phase Explosions in Darex and Sulfex Processes, ORNL-2937 (Dec. 27, 1960).

8. C. L. Peterson, P. D. Miller, J. D. Jackson and F. W. Fink, Construction Materials for Various Head-End Processes for the Aqueous Reprocessing of Spent Fuel Elements, BMI-1375 (Aug. 28, 1959).

9. J. B. Adams, A. M. Benis and C. D. Watson, Comparative Cost Study of Processing Stainless Steel Jacketed UO_2 Fuel. Mechanical Shear-Leach Versus Sulfex Core Dissolution, ORNL-3227 (in press).

10. R. E. Blanco, et al., "Chemical Processing of Power and Research Reactor Fuels at Oak Ridge National Laboratory," Proceedings of the AEC Symposium for Chemical Processing of Irradiated Fuels from Power, Test and Research Reactors, held at Richland, Washington, October 20-21, 1959, TID-7583, p. 234-306 (Jan. 1960).

11. T. A. Gens, Investigation of Depassivation of 304 Stainless Steel in 6 M H_2SO_4 by EMF Measurements, ORNL CF-60-1-22 (Jan. 14, 1960).

12. L. M. Ferris and Arlene H. Kibbey, Laboratory Development of the Sulfex Process for the Dissolution of Consolidated Edison Power Reactor Fuel, ORNL-2714 (Oct. 16, 1959).

13. R. A. Ewing, H. B. Brugger, and D. N. Sunderman, Dissolution of Irradiated Consolidated Edison Power-Reactor Fuel by the Sulfex and Darex Processes, BMI-1427 (Mar. 10, 1960).

14. R. E. Blanco, L. M. Ferris, and D. E. Ferguson, Aqueous Processing of Thorium Fuels, ORNL CF-61-6-14 (June 22, 1961).

4.0 MODIFIED ZIRFLEX PROCESS

The modified Zirflex process is an aqueous fluoride head-end process developed for the dissolution of uranium-zirconium alloy fuels. The process has not been tried for the dissolution of a thorium-bearing zirconium-type fuel; e.g., U-Th-Zr alloy, but it is believed that thorium would be dissolved in the fluoride reagents.[1] Modified Zirflex produces a nitrate solution from which uranium (and thorium) can be recovered by a conventional solvent extraction process such as Thorex.

The process utilizes a solvent mixture of 5.4M NH_4F-0.3M NH_4NO_3 to which is added 1 M H_2O_2 during the dissolution.[2] The flowsheet described below was developed for TRIGA fuel (8% U-91% Zr-1% H alloy). Changes in the process required by the presence of thorium will not be anticipated; it will be assumed that thorium can be treated without causing the process to be changed appreciably. A flowsheet of modified Zirflex is shown in Fig. 4.1.

4.1 Process Description

Decladding. TRIGA fuel is clad with a 30-mil-thick aluminum can which is removed with 2M NaOH at boiling temperature. The aluminum solution is washed from the bare fuel core and discarded to waste. When $NaNO_3$ is a component of the decladding solution, the off-gas is ammonia rather than hydrogen.

Graphite Disintegration. Each TRIGA element contains two 1/4-inch diameter by 4-inch graphite end pieces which are disintegrated in 19 M HNO_3-2M H_2SO_4 at room temperature. The concentrated acids cause the graphite to swell and fall apart. The graphite residue is discarded. The entire decladding and graphite disintegration require about 3 hours. Graphite is removed prior to core dissolution to prevent absorption of appreciable amounts of uranium by the graphite. Careful washing is required to prevent acid carry-over to the core dissolution because acid fluoride solutions are very corrosive.

Core Dissolution. The Zr-U core is dissolved in 5.4 M NH_4F-0.3 M NH_4NO_3 aqueous solution at boiling conditions. The 1.42-in. diameter by 14-in. fuel element requires about 11 hours to dissolve; the indicated initial dissolution rate[3] is 30 mg/cm^2 min. During the dissolution, 1 M H_2O_2 is continuously added to oxidize U(IV) to U(VI), which is the more soluble form. Hydrogen peroxide also enters into reaction with H_2 diminishing the amount of this gas evolved.

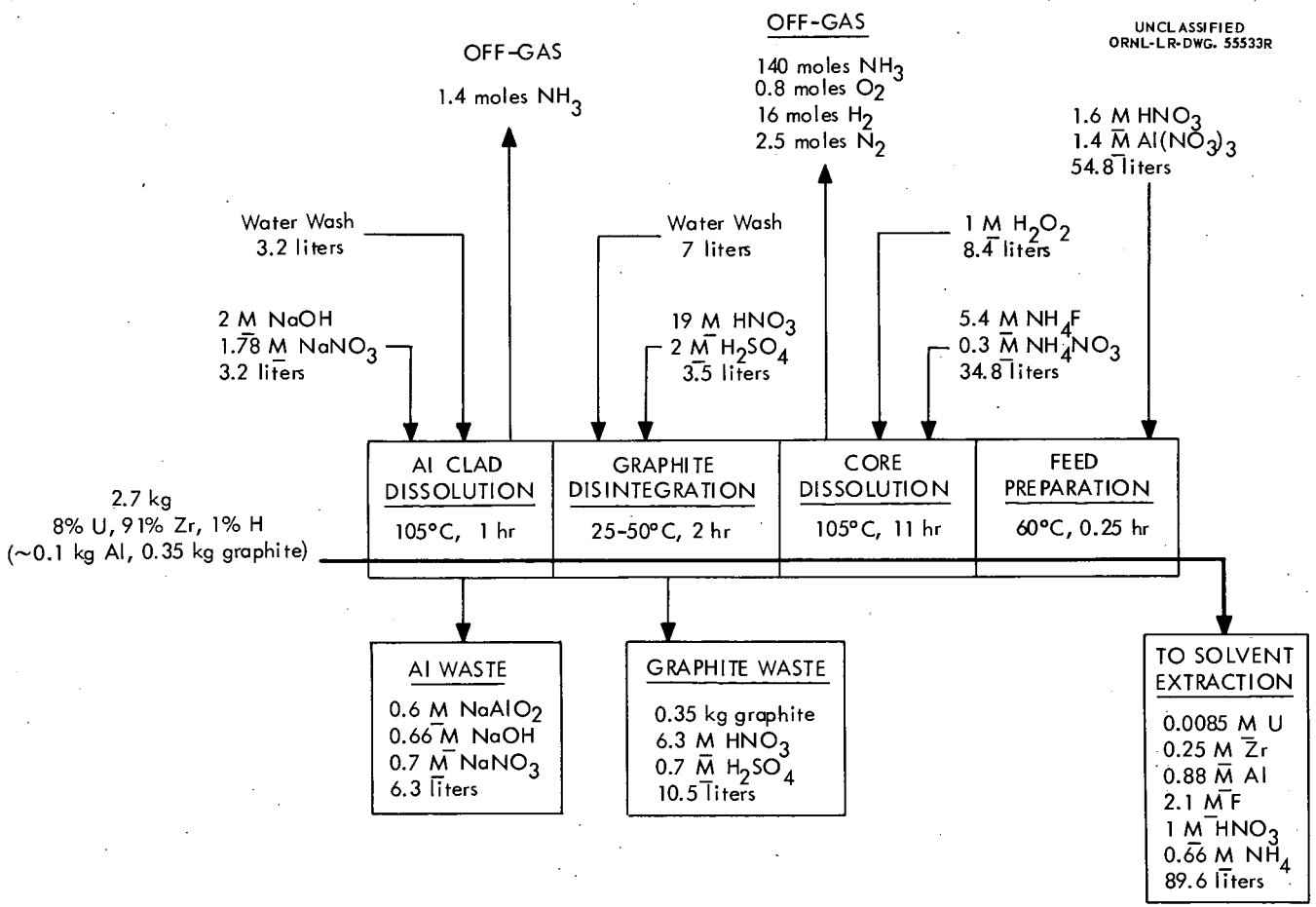

Fig. 4.1. Modified Zirflex Process for Dissolution of 8% U – 91% Zr – 1% H in 5.4 M NH_4F – 0.3 M NH_4NO_3 – H_2O_2.

If thorium were present in the fuel, the volumes of dissolution reagents would have to be adjusted to maintain thorium fluoride solubility.

Feed Preparation. In the feed preparation step, HNO_3 and $Al(NO_3)_3$ are added to the dissolver to produce suitable solvent extraction feed. For the Thorex process the feed would have to be evaporated to produce a 0.1 - 0.4 M HNO_3 deficient solution that would be about 1 M Th.

At this point the prepared feed would be sent to a Thorex plant for recovery of decontaminated thorium and uranium as nitrate solutions (see Section 1.0). The large amount of zirconium present would not affect Thorex operation; this metal would leave the first extraction column in the aqueous waste stream.

Gaseous Reaction Products. The principal gaseous reaction product of the decladding step is ammonia, which does not present a disposal problem. The average composition of the gases from the core dissolution is shown in Table 4.1.[3] The chemistry of the dissolution reactions has been very thoroughly described by Gens.[2]

Table 4.1. Average Composition of Off Gases from Dissolution of U-Zr Alloy in Boiling 5.4 M NH_4F - 0.3 M NH_4NO_3

	Volume %
H_2	10
N_2	2
O_2	0.5
NH_3	87.5

4.2 Process Performance

Uranium and thorium losses in the modified Zirflex process are possible in the decladding and graphite disintegration steps if the decladding solution, $NaOH$-$NaNO_3$, should react with the metals. However, $NaOH$-$NaNO_3$ solution apparently does not react with U-Zr, so there is no detectable decladding loss. The rate of attack on U-Zr by the 19 M HNO_3-2 M H_2SO_4 solution for graphite disintegration is also slow. The fuel core suffers less than 0.01% weight loss during the disintegration. However, if graphite were not removed but allowed to be present during core dissolution, approximately 0.5% uranium might be adsorbed on the graphite and lost.[4]

4.3 Process Limitations and Problems

The modified Zirflex process quite adequately treats the fuel for which it was designed. There are present the usual design problems in handling potentially explosive mixtures of gases, but these are not serious. Also, it is possible to precipitate uranium compounds in core dissolution if concentrations and volumes of reactants are not reasonably well controlled. The dissolution rate is sensitive to the U content of the alloy and to the fluoride/uranium ratio; high U content and low F/U ratios brought lower dissolving rates.[2] In fact, the process might not be suitable for fuels having U contents appreciably greater than 10 wt %.

4.4 Construction Materials

Corrosion rates for several possible construction materials for the boiling fluoride solution have been investigated by Gens.[5] The results of some long term tests are given in Table 4.2. Stainless steel type 309 SNb, Hastelloy F and LCNA show relatively good resistance to attack. Corrosion rates in solution and at the interface for these alloys were in the range 1-3 mils/month while vapor phase corrosion rates were of the order 0.1-0.8 mils/month.

In previous shorter term tests[2] of 3-9 hours duration, Ni-o-nel and Monel showed excessive corrosive attack in boiling 6 M NH_4F-0.3 M NH_4NO_3 solution. The tests were conducted with and without 0.03 M H_2O_2 being present. The presence of H_2O_2 lowered the corrosion rate in the case of Ni-o-nel but increased it in the case of Monel.

4.5 Processing Cost

No cost data are available for the modified Zirflex process.

4.6 Status of Development

The modified Zirflex process for processing TRIGA fuel has been carried through laboratory development, and the flowsheet has been demonstrated in engineering scale equipment.[6] No experiments have been made with irradiated materials.

4.7 Future Work

Modified Zirflex has been developed using U-Zr fuel, and the effect on process operations of the presence of thorium cannot be fully anticipated on the basis of current data. It would be necessary to demonstrate the flowsheet

Table 4.2. Corrosion of Various Alloys in Flowing 5.4 M NH_4F-0.33 M NH_4NO_3--0.003 M H_2O_2 Solutions (105°C)

Test Period, hr	Alloy	Corrosion Rate, mils/month		
		Vapor	Interface	Solution
24	304L	1.39, 0.32	14.99, 14.56	16.56, 15.73
	309SNb	0.03, 0.04	1.20, 1.48	1.65, 1.60
	Hastelloy F	0.77, 0.31	3.61, 2.25	3.35, 2.14
	LCNA[a]	0.17, 0.07	2.53, 2.20	2.53, 1.95
48	304L	0.72, 0.02	10.68, 9.98	9.56, 9.15
	309SNb	0.05, 0.05	1.94, 1.54	1.45, 1.42
	Hastelloy F	0.50, 0.20	2.54, 1.67	2.47, 1.71
	LCNA	0.09, 0.07	1.85, 1.63	1.89, 1.50
72	304L	0.48, 0.15	9.58, 9.10	7.74, 7.50
	309SNb	0.05, 0.05	1.48, 1.25	1.22, 1.20
	Hastelloy F	0.73, 0.22	2.22, 1.73	2.23, 1.62
	LCNA	0.10, 0.10	1.61, 1.44	1.66, 1.36
144	304L	0.26, 0.14	9.21, 9.10	7.16, 7.13
	309SNb	0.07, 0.06	1.21, 1.06	1.14, 1.13
	Hastelloy F	0.77, 0.22	2.10, 1.99	2.16, 1.76
	LCNA	0.06, 0.10	1.38, 1.28	1.43, 1.23

[a]A low-carbon nickel alloy having the same composition as Ni-o-nel, except for a lower carbon content (0.005%).

for a U-Th-Zr fuel. For example, the effect of thorium on product losses, dissolution rates, solution stability, off-gas composition and corrosion needs to be evaluated. However, since there are other head-end processes for zirconium-type fuels; e.g., Zircex and Zirflex, a U-Th-Zr fuel has to be rather well defined before it can be decided just which processing method should be developed.

REFERENCES

1. T. A. Gens, Oak Ridge National Laboratory, personal communication (Nov. 20, 1961).

2. T. A. Gens, Modified Zirflex Process for Dissolution of 1-10% U-Zr Alloy Fuels in Aqueous NH_4F-NH_4NO_3-H_2O_2: Laboratory Development, ORNL-2905 (Mar. 4, 1960).

3. F. L. Culler, et al., Chemical Technology Division Annual Progress Report for Period Ending May 31, 1961, ORNL-3153 (Sept. 14, 1961).

4. R. E. Blanco, Chemical Technology Division Chemical Development Section B Monthly Progress Report, January 1961, ORNL CF-61-2-61 (May 15, 1961).

5. T. A. Gens, Zircex and Modified Zirflex Processes for Dissolution of 8% U-91% Zr-1% H TRIGA Reactor Fuel, ORNL-3065 (Nov. 10, 1961).

6. F. G. Kitts, Modified Zirflex Dissolution in Engineering Scale Equipment ORNL CF-61-6-97 (June 29, 1961).

7. F. L. Culler, Chemical Technology Division Annual Progress Report for Period Ending August 31, 1961, ORNL-2993 (Sept. 23, 1960).

8. R. E. Blanco, Chemical Technology Division Chemical Development Section B Monthly Progress Report, March 1961, ORNL CF-61-4-108 (Aug. 19, 1961).

9. T. A. Gens and F. G. Baird, Modified Zirflex Process for Dissolution of Zirconium- and Niobium-Bearing Nuclear Fuels in Aqueous Fluoride Solutions: Laboratory Development, ORNL-2713 (Dec. 8, 1959).

10. M. E. Whatley, Chemical Technology Division Unit Operations Section Monthly Progress Report, January 1961, ORNL CF-61-1-27 (July 5, 1961).

11. M. E. Whatley, Chemical Technology Division Unit Operations Section Monthly Progress Report, February 1961, ORNL CF-61-2-65 (July 28, 1961).

12. M. E. Whatley, Chemical Technology Division Unit Operations Section Monthly Progress Report, March 1961, ORNL CF-61-3-67 (Sept. 28, 1961).

13. F. R. Bruce, R. E. Blanco and J. C. Bresee, Recent Developments in Feed Preparation and Solvent Extraction, ORNL CF-58-11-91 (Mar. 20, 1959).

14. T. A. Gens, "New Developments in Uranium-Zirconium Alloy Fuel Reprocessing," Nuclear Sci. Eng., 9, 488-494 (1961).

5.0 ZIRFLEX PROCESS

The use of aqueous NH_4F-NH_4NO_3 solutions as a dissolution reagent for removing zirconium or Zircaloy clad from reactor fuel was initiated at HAPO in connection with processing UO_2 fuel from the Plutonium Recycle Test Reactor. Swanson[1] reported at Geneva on the status of the process. Later work was initiated at ORNL on a Zirflex system for preparing solvent extraction feed from PWR blanket fuel, which is UO_2 pellets contained in a Zircaloy-2 tube, 0.4 in. diameter by 10.25 in. long. Although the development has been carried out on fuel containing no thorium, the process is of interest because it could easily be adapted to a Zircaloy-clad UO_2-ThO_2 fuel for example.

5.1 Process Description

The ORNL Zirflex process[2] is shown in Fig. 5.1; the various steps of the process are discussed below.

Decladding. Zircaloy-2 clad is removed by dissolution in boiling 6 M NH_4F - 1 M NH_4NO_3; about 3 hours are required to dissolve the 27-mil clad. Ammonium fluoride concentrations around 6 M seem to give the maximum dissolution rate; at higher concentrations (8-10 M), the rate decreases probably due to the formation of ammonium fluorozirconate on the Zircaloy surface.[1] Ammonium nitrate also seems to increase the rate in concentrations up to 2 M. The dissolution would proceed quite satisfactorily without NH_4NO_3; however, this compound is added to suppress H_2 formation in favor of NH_3. Zirconium dissolution proceeds as follows:

$$Zr + 6\ NH_4F \longrightarrow (NH_4)_2\ ZrF_6 + 4\ NH_3 + 2\ H_2$$

$$2\ H_2 + 0.5\ NH_4NO_3 \longrightarrow NH_3 + 1.5\ H_2O$$

The unreacted fuel-bearing core is filtered and washed free of decladding solution which is sent to waste.

Core Dissolution. The oxide core of the PWR fuel element is dissolved in concentrated HNO_3 containing a little $Al(NO_3)_3$. In a mixed oxide fuel containing thorium, the presence of fluoride is desirable to catalyze thorium dissolution.

Feed Adjustment. The core solution is made into suitable solvent extractiion feed for decontamination and recovery of product materials. For Thorex feed the

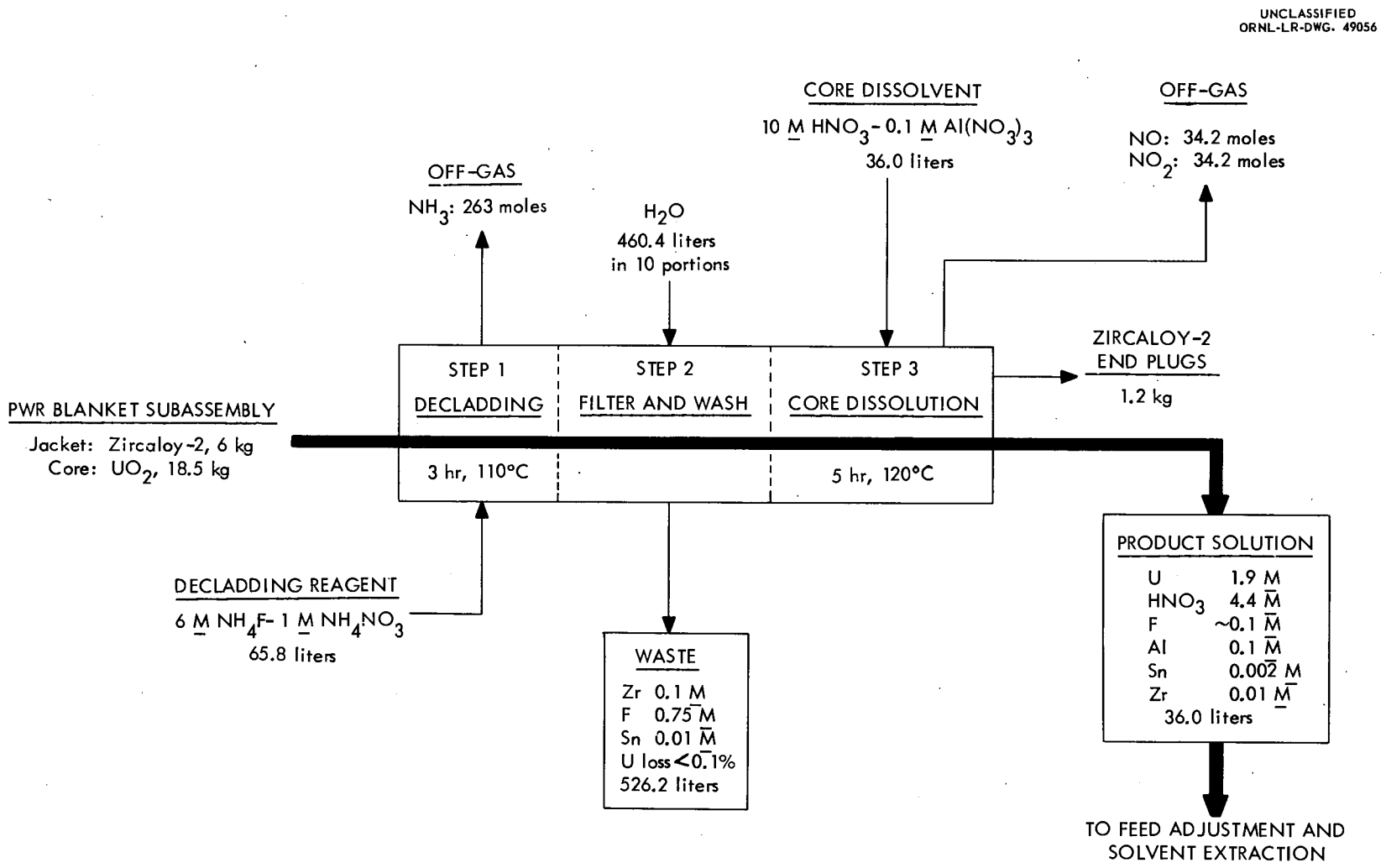

Fig. 5.1. Zirflex Process for Decladding and Dissolution of PWR Blanket Fuel.

HNO_3 content would be adjusted to 0.1-0.4 M acid deficiency, and the Th content to 1 - 1.5 M.

Gaseous Reaction Products. The decladding operation gives principally ammonia which can be absorbed in water or vented to a stack. Core dissolution results in oxides of nitrogen, mainly NO and NO_2. In a refluxing operation these would be almost totally absorbed in condensing steam and returned to the dissolver.

5.2 Process Performance

It is desirable to carry out the decladding step in such manner that little or none of the fuel element core dissolves. Consequently much experimental effort at ORNL[2] and HAPO[1] has been directed toward determining the behavior of the core materials toward the decladding solution. Soluble uranium losses have been reported[3] to be in the range 0.01% - 0.11% for nonirradiated and irradiated material (see Table 5.1).

Table 5.1. Uranium Losses in Zirflex Decladding of PWR Blanket Fuel Elements

Burn-up (Mwd/ton)	Soluble losses (%)
0	0.01
0	0.08
0	0.02
0	0.04
0	0.05
580	0.03
1270	0.11
1750	0.04

5.3 Process Limitations and Problems

The presence of tin in Zircaloy-2 makes the removal of this type of clad more difficult because tin is difficult to dissolve. The residue in the decladding solution increases filtration and washing problems. The amount of fluoride that is carried over from decladding to core dissolution must be carefully controlled to preclude excessive corrosion when HNO_3 is added.

The presence of an oxide film, ZrO_2, on the surface of fuel pieces has a detrimental effect on the decladding rate. This film will almost surely be present on irradiated fuel that has been in contact with high temperature water for extended periods of time.

It has been observed[1,2] that $ZrO_2.2H_2O$ can precipitate in the decladding step if ammonia is not effectively removed from the system. This is probably due to a reaction between zirconium compounds and ammonium hydroxide.

This process would probably have severe limitations for processing thorium fuel because of appreciable solubility of thorium in aqueous fluoride solutions.

5.4 Materials of Construction

Stainless steel type 309 SNb, Ni-o-nel and Hastelloy F have been corrosion tested[3] in cyclic operation alternately in boiling 6 M NH_4F - 1 M NH_4NO_3 and 10 M HNO_3-0.1 M $Al(NO_3)_3$. Corrosion was a maximum in the vapor phase, giving attack rates shown in Table 5.2.

Table 5.2. Maximum Corrosion Rates of Three Alloys in Boiling Zirflex Dissolver Solutions

Alloy	Number of Cycles	Corrosion Rate (mils/month)
309 SNb	18	3.0
Ni-o-nel	23	4.6 - 5.1
Hastelloy F	5	3.5 - 5.0

5.5 Processing Cost

No cost data are available for the Zirflex process.

5.6 Status of Development

The Zirflex process has been carried through laboratory development at ORNL and some small engineering scale dissolutions have been made.[4] Operations at HAPO have been conducted on a larger scale. However, no Zirflex operations have been performed using a fuel which contains thorium.

5.7 Future Work

The behavior of the Zirflex process on a thorium-containing fuel remains to be demonstrated. Until this is done, the effect of thorium on dissolution

rates, product loss in decladding solution, solution stability and corrosion cannot be fully appraised. However, thorium has appreciable solubility in aqueous fluoride solutions, so perhaps the process is not well suited for a Th-U fuel. The modified Zirflex process discussed in Section 4.0 would probably be more adaptable to these fuels.

REFERENCES

1. J. L. Swanson, "The Selective Dissolution of Zirconium or Zircaloy Cladding by the Zirflex Process," Proceedings of the Second United Nations International Conference on the Peaceful Uses of Atomic Energy, held in Geneva, 1958, vol. 17, p. 154 (1959).

2. L. M. Ferris, Zirflex Process for PWR Blanket Fuel. II. Revised Flowsheet, ORNL-2940 (Oct. 26, 1960).

3. F. L. Culler, Chemical Technology Division Annual Progress Report for Period Ending August 31, 1960, ORNL-2993 (Sept. 23, 1960).

4. M. E. Whatley, Chemical Technology Division Unit Operations Section Monthly Progress Report, October 1960, ORNL CF-60-10-49 (Apr. 5, 1961).

5. M. E. Whatley, Chemical Technology Division Unit Operations Section Monthly Progress Report, August 1960, ORNL CF-60-8-86 (Dec. 15, 1960).

6. M. E. Whatley, Chemical Technology Division Unit Operations Section Monthly Progress Report, September 1960, ORNL CF-60-9-43 (Jan. 27, 1961).

7. R. E. Blanco, Chemical Technology Division Chemical Development Section B Monthly Progress Report, January 1960, ORNL CF-60-2-11 (Apr. 11, 1960).

8. R. E. Blanco, Chemical Technology Division Chemical Development Section B Monthly Progress Report, September 1959, ORNL CF-59-10-113 (Jan. 14, 1960).

9. R. E. Blanco, Chemical Technology Division Chemical Development Section B Monthly Progress Report, December 1959, ORNL CF-59-12-74 (Marc. 17, 1960).

10. R. E. Blanco, Chemical Technology Division Chemical Development Section B Monthly Progress Report, October 1959, ORNL CF-59-12-20 (Jan. 15, 1960).

11. R. E. Blanco, Chemical Technology Division Chemical Development Section B Monthly Progress Report, March 1950, ORNL CF-60-4-36 (undated).

12. R. E. Blanco, Chemical Technology Division Chemical Development Section B Monthly Progress Report, February 1960, ORNL CF-60-3-84 (May 3, 1960).

13. F. R. Bruce, R. E. Blanco, and J. C. Bresee, Recent Developments in Feed Preparation and Solvent Extraction, ORNL CF-58-11-91 (March 20, 1959).

14. P. W. Smith, The Zirflex Process Terminal Development Report, HW-65979 (Aug. 20, 1960).

6.0 ZIRCEX PROCESS

The Zircex process is another head-end process for zirconium-type fuels; however, it differs from other processes such as Zirflex and modified Zirflex in that the zirconium removal is nonaqueous. Also, the Zircex process can be used as a head-end for either solvent extraction or fluoride volatility. The two alternate flowsheets are shown in Figs. 6.1 and 6.2. The two flowsheets have been developed by Gens[1,2] for specific reactor fuels; viz., TRIGA and Pressurized Water Reactor seed core, which contained no thorium, and at this time the effect of the presence of thorium on the flowsheet cannot be stated. However, it is believed that the Zircex process can be adapted to U-Th-Zr alloys.[3]

6.1 Process Description

The Zircex process can be used as a head-end for solvent extraction or fluoride volatility; both of these are discussed below.

6.1.1 Head-End for Solvent Extraction

TRIGA fuel has been prepared for solvent extraction by Zircex as shown in Fig. 6.1. The fuel elements are an 8% U - 91% Zr - 1% H alloy which has been clad in aluminum. The elements are 1.476 in. diameter by 28.5 in. long. The over-all length includes two 4-inch-long graphite plugs, one on each end of the fuel element. TRIGA fuel contains no thorium.

Decladding. The first step in processing TRIGA fuel is the removal of the aluminum clad as shown in Fig. 6.1. The solid element is contacted at 300°C with a mixture of $HCl-N_2$ gas to volatilize $AlCl_3$.

Core Hydrochlorination. After the alloy core has been exposed, the temperature is increased to 400-600°C and the reactant gas is made pure HCl. Under these conditions, the remainder of the aluminum and the bulk of the zirconium are volatilized, the Zr as $ZrCl_4$. Also, uranium reacts to form UCl_3. Approximately 1.5% of the U volatilizes. The hydrochlorination reactions are

$$Zr + 4HCl \longrightarrow ZrCl_4 + 2H_2$$

$$U + 3HCl \longrightarrow UCl_3 + 1.5\ H_2$$

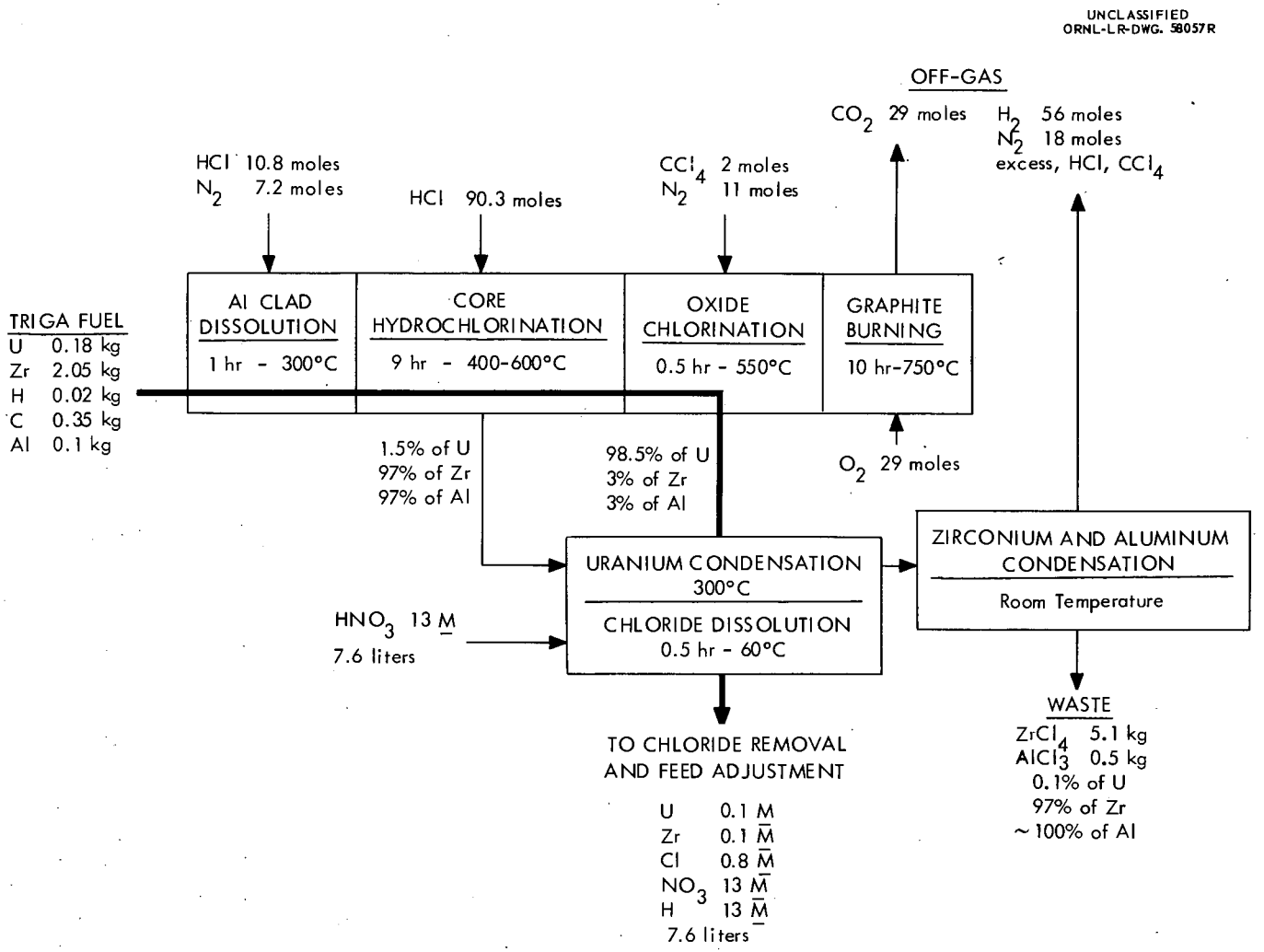

Fig. 6.1. Zircex Process for Hydrochlorination of TRIGA Fuel (8% U – 91% Zr – 1% H).

Core Chlorination. The uranium core is further oxidized by CCl_4 to the tetrachloride by the reaction

$$4\ UCl_3 + CCl_4 \longrightarrow 4\ UCl_4 + C.$$

This reaction is carried out at about 550°C at which temperature the UCl_4 is volatile. If oxide fuels are treated in this manner, e.g., UO_2-ZrO_2, the oxides are also converted to the volatile chlorides by carbon tetrachloride.

Uranium Condensation. The volatile Al, Zr, and U chlorides are passed through a bed of metal turnings[4] held at approximately 300°C at which temperature UCl_4 condenses. Over 97% of the $ZrCl_4$, which has a vapor pressure of 0.3 atm at 300°C, and about 100% of the $AlCl_3$, which has a vapor pressure of 1 atm at 183°C, pass through the 300°C condenser.[1]

Uranium Chloride Dissolution. The UCl_4 and the small amount of $ZrCl_4$ collected in the condenser are dissolved in 13 M HNO_3 at about ambient temperature.

Chloride Removal and Feed Adjustment. Chloride solutions cannot be treated in conventional stainless steel extraction equipment because of corrosion problems. However, the chloride in solution can be reduced to 5 ppm by stripping with HNO_3 vapor or NO_2 gas as described in Section 2.1. The final solution is evaporated to a 0.1 - 0.4 M HNO_3 deficient condition and adjusted in metal concentration by dilution with water to make suitable solvent extraction feed.

$AlCl_3$ and $ZrCl_4$ Condensation. These chlorides are desublimed at room temperature and disscarded as waste.

Graphite Burning. Graphite from TRIGA fuel elements is burned as a means of disposal and for recovering any adsorbed UCl_3. Any UCl_3 that has been adsorbed by the graphite will be converted to the oxide during combustion, and then this oxide will be recovered as UCl_4 in the next chlorination. Consequently there would be no uranium loss in this step.

Gaseous Reaction Products. Hydrogen is the gaseous product formed in the hydrochlorination, and it is diluted with excess HCl and N_2. Chlorination with CCl_4 does not produce a gaseous product unless the fuel is an oxide mixture, such as UO_2-ZrO_2-ThO_2. Then it is possible to generate CO, CO_2, and COCl. The usual methods for disposing of radioactive off-gases can be followed here, i.e., diluting with air and exhausting from a stack.

6.1.2 Process Performance

There are two possible means of losing uranium in the Zircex process: (1) failure of UCl_4 to condense in the condensation step; and (2) entrainment of UCl_4 particles by $AlCl_3$ and $ZrCl_4$ vapor. Demonstrations in small engineering scale equipment[2] indicated that uranium losses could be maintained less than 0.1%. Selected results[4] are given in Table 6.1.

Table 6.1. Selected Results for Recovery of Uranium in the Zircex Process

Fuel: 7% U-Zr alloy
Condensation temperature: 300°C
Hydrochlorination: 2 hours at 600°C with HCl
Chlorination: 1 hour at 600°C with CCl_4

Condenser packing	Zr in the U condenser (%)	U loss (%)
glass wool	2.5	< 0.1
copper turnings	1.1	0.01
copper turnings	0.1	0.01
nickel wire	0.15	< 0.1

The presence of Zr in the U product is of no consequence because Zr is readily separated in the solvent extraction process.

6.1.3 Process Limitations, Advantages, and Problems

The Zircex process was developed specifically as an alternate to the modified Zirflex process for processing high-zirconium fuels. The purpose was to avoid the large volumes of corrosive, aqueous waste present in the modified Zirflex. Zircex circumvents this problem by permitting separation of the bulk of the zirconium from the uranium before solvent extraction, and the process can treat zirconium oxide as well as alloy fuels. A possible limitation on the process is the undeveloped technology for carrying out high temperature chlorinations of radioactive material. A large amount of radioactive zirconium chloride is produced for which waste disposal has not been fully evaluated.

6.1.4 Construction Materials

An evaluation of several possible materials of construction has been made by Batelle Memorial Institute.[5] These materials were exposed to the hydrochlorination cycle in a series of cyclic tests, and the results shown in Table 6.2 were obtained. None of the materials showed excessively high corrosion rates with Illium R, Hastelloy C and Nickel showing no attack.

Table 6.2. Performance of Materials of Construction for the Zircex Process in Dry Hydrogen Chloride at 400-600°C

	75 Cycles		
Material	Weight Change (mg)	Corrosion Rate by Metallography (mils/100 cycles)	Remarks Based on Metallographic Examination
Haynes 25	+ 2	2.1	General attack
Type S-816	+ 39	0.5	Slight intergranular attack
Type S-590	-133[a]	2.0	Severe intergranular attack
Inconel	+ 67	0.0	Slight surface attack
Illium R	+ 46	0.5	No attack
Hastelloy B	+157	1.1	Slight intergranular attack
Hastelloy C	+ 70	0.0	No attack
Nickel	+ 95	dimensional increase[b]	No attack

(a) Weight change corresponding to rate of 0.3 mils per 100 cycles.

(b) Possibly due to plastic flow of material during polishing.

6.1.5 Processing Cost

No cost estimates have been made for the Zircex Process.

6.1.6 Status of Development

Engineering scale hydrochlorinations and chlorinations have been made to demonstrate the Zircex process.[2] Reaction rate data have been obtained on 4-7 kg multiplate assemblies; however, more data are probably needed before hydrochlorinator design can be undertaken.

Experiments with irradiated materials have been done only at tracer level.

Only scouting laboratory experiments have been conducted with thorium,[6] and these were with thorium metal. It was found that thorium metal reacted with HCl gas at 700°C at a rate of 12.7 mg/cm^2 min. The thorium tetrachloride did not appear to be volatile below 600°C.

6.1.7 Future Work

In any consideration of this process for processing thorium fuels, development from the laboratory to pilot plant scale will be needed. The effects of thorium on hydrochlorination rates, formation of compounds insoluble in HNO_3, product losses, etc., are unknown. Techniques for handling radioactive process materials need to be developed.

6.2 Head-End for Fluoride Volatility

The Zircex process can also be used as a head-end process for the Fluoride Volatility process, which is discussed in Section 15.0. A flowsheet for processing Pressurized Water Reactor seed elements has been given in Fig. 6.2. Also, a study of this process has been made by Ammann, Madden, and Swift.[16]

This phase of Zircex processing has not been developed to the same extent as the phase leading to solvent extraction, and no work with thorium fuels has been carried out. The techniques for removing Zr on Zircaloy are the same as those for preparing solvent extraction feed.

6.2.1 Decladding

In the case of the PWR element, the Zircaloy-2 clad is hydrochlorinated with anhydrous HCl as discussed in Section 6.1.1. Volatile $ZrCl_4$ and $SnCl_4$ pass overhead at 500-600°C and are desublimed at room temperature. In the hydrochlorinator uranium is converted to the trichloride. In this case the chlorination step using CCl_4 to convert UCl_3 to volatile UCl_4 is omitted.

6.2.2 Dissolution

After zirconium has been removed, UCl_3 is dissolved in 50-50 mole % NaF-ZrF_4 at about 600°C.

6.2.3 Fluorination

The molten salt mixture is fluorinated with F_2, or partly with HF followed by F_2, and UF_6 is volatilized. This step in the process is the first step in fluoride volatility as discussed in Section 15.0, and succeeding steps would follow fluoride volatility procedures.

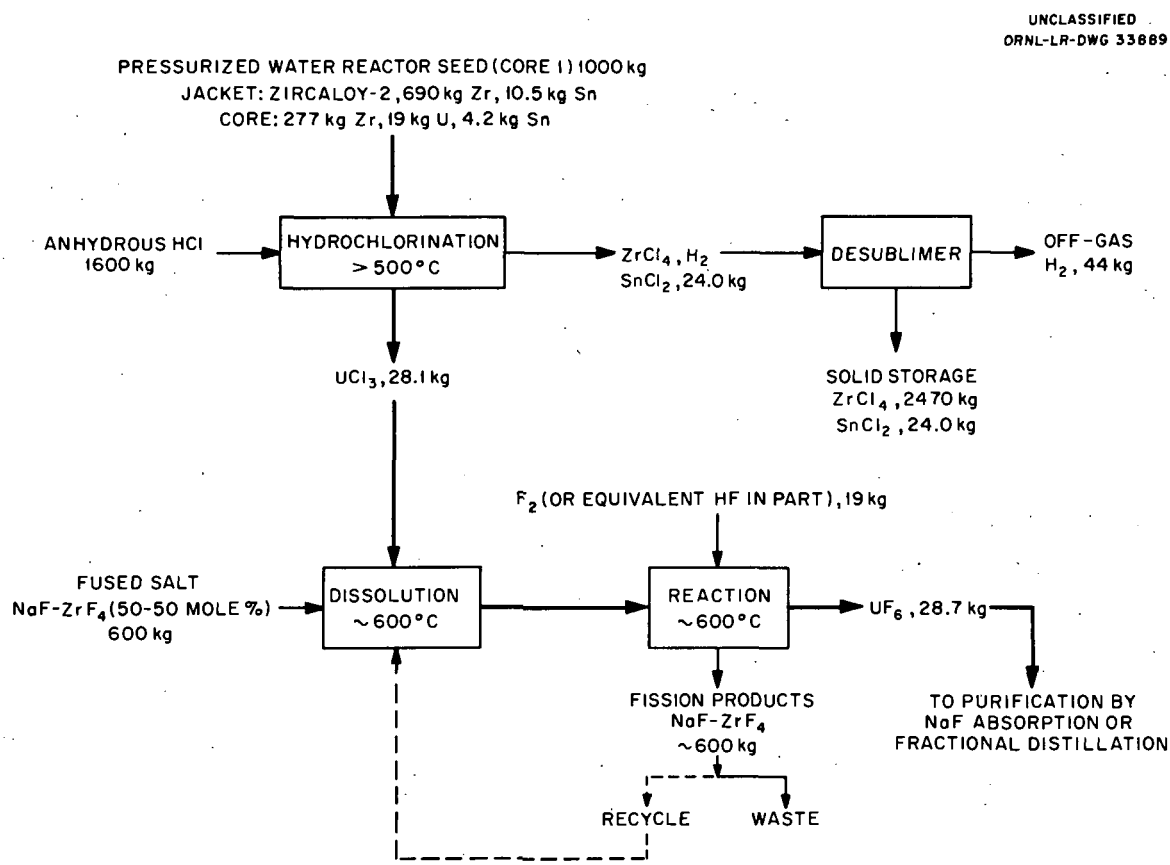

Fig. 6.2. Zircex Process for Hydrochlorination of Fully Enriched Fuels with Purification by the Fluoride Volatility Process.

The $NaF-ZrF_4$ salt used to dissolve the UCl_3 need not be discarded after fluorination. The salt can be used repeatedly until the fission product content becomes intolerable.

6.2.4 Process Performance

The performance of this phase of Zircex processing with respect to product losses should be better than the process for preparing solvent extraction feed because uranium is not volatilized as UCl_4. Only the less volatile UCl_3 is formed.

6.2.5 Status of Development

Only the hydrochlorination step of this process has been demonstrated both in the laboratory and in small scale engineering equipment. This work was done in connection with the development of the solvent extraction head-end discussed above (Section 6.1.1). The dissolution step for UCl_3 in $NaF-ZrF_4$ mixture is elementary and no difficulty is anticipated. The fluoride volatility operations, of course, have been demonstrated at the pilot plant level.[17]

Only a scouting experiment has been carried out with thorium.[6]

6.2.6 Future Work

The most uncertain phase of the development is the behavior and effect of thorium on the process. Laboratory and pilot plant data are needed to establish design specifications.

REFERENCES

1. T. A. Gens, Zircex and Modified Zirflex Processes for Dissolution of 8% U-91% Zr-1% H TRIGA Reactor Fuel, ORNL-3065 (Nov. 10, 1961).

2. T. A. Gens, et al., Status of Development of the Zircex Process, ORNL-2631 (Mar. 17, 1959).

3. T. A. Gens, Oak Ridge National Laboratory, personal communication (Nov. 20, 1961).

4. T. A. Gens, "New Developments in Uranium-Zirconium Alloy Fuel Reprocessing," Nuclear Sci. Eng., 9, 488-494 (1961).

5. C. L. Peterson, P. D. Miller, J. D. Jackson and F. W. Fink, Construction Materials for Various Head-End Processes for the Aqueous Reprocessing of Spent Fuel Elements, BMI-1375 (Aug. 28, 1959).

6. T. A. Gens and R. L. Jolley, New Laboratory Developments in the Zircex Process, ORNL-2922 (Apr. 10, 1961).

7. F. L. Culler, Chemical Technology Division Annual Progress Report for Period Ending August 31, 1960, ORNL-2993 (Sept. 23, 1960).

8. T. J. Carter, Jr., and R. A. Stone, Zircex Kinetics and Uranium Loss Studies, AECU-3751 (Nov. 13, 1957).

9. T. R. Jaworowski and C. J. King, III. Zircex Uranium Sublimate Loss, AECU-3750 (Jan. 24, 1958).

10. R. E. Blanco, Chemical Technology Division Chemical Development Section B Monthly Progress Report, August 1960, ORNL CF-60-9-108 (Jan. 6, 1961).

11. R. E. Blanco, Chemical Technology Division Chemical Development Section B Monthly Progress Report, April 1960, ORNL CF-60-5-106 (undated).

12. R. E. Blanco, Chemical Technology Division Chemical Development Section B Monthly Progress Report, January 1960, ORNL CF-60-2-11 (Apr. 11, 1960).

13. R. E. Blanco, Chemical Technology Division Chemical Development Section B Monthly Progress Report, September 1959, ORNL CF-59-10-113 (Jan. 14, 1960).

14. R. E. Blanco, Chemical Technology Division Chemical Development Section B Monthly Progress Report, March 1960, ORNL CF-60-4-36 (undated).

15. R. E. Blanco, Chemical Technology Division Chemical Development Section B Monthly Progress Report, February 1960, ORNL CF-60-3-84 (May 3, 1960).

16. P. R. Ammann, D. A. Madden and D. L. Swift, Zircex Fluoride Volatility Combination, M.I.T. Practice School Report, KT-339 (Mar. 1958).

17. F. W. Miles and W. H. Carr, Engineering Evaluation of Fluoride Volatility Pilot Plant Equipment, ORNL CF-60-7-65 (Sept. 30, 1960).

7.0 GRIND-LEACH PROCESS FOR GRAPHITE FUELS

Operations[2] in the grind-leach process are shown schematically in Fig. 7.1. This flowsheet was drawn for processing 1-1/2 in. diameter spherical elements from a pebble bed reactor; however, it is applicable to other types of graphite fuels. The process consists of four basic operations: grinding, leaching with HNO_3, filtration and evaporation.

7.1 Process Description

Grinding. Irradiated Th-U carbide fuel dispersed in graphite is ground to a small mesh size in a suitable roll-type crusher or ball mill. The required final size of the particles depends principally upon the uranium losses that can be tolerated since the recovery is an inverse function of the particle size. The leaching time required for a given uranium recovery is also a function of the particle size, particularly at low uranium concentrations in the fuel.

Leaching. Thorium, uranium, fission products and protactinium are separated from the bulk of the graphite by digesting the ground fuel particles in concentrated nitric acid under refluxing conditions. In the laboratory it was advantageous to leach in two distinct operations to obtain high recoveries; typical laboratory results[1] are shown in Fig. 7.2 for an unirradiated UC_2-graphite fuel containing no thorium.

The data of Fig. 7.2 indicate quite clearly the importance of mesh size and in particular the importance of uranium content of the fuel upon the degree of recovery. At low uranium concentrations (< 3 wt%) recoveries are quite low, and it is doubtful that the grind-leach process is adequate for such a system. However, Bradley and Ferris[1] found that approximately quantitative recovery could be obtained by burning the leached graphite residue followed by digestion of the ash in HNO_3 (see Section 9.0).

When thorium was present in the fuel in a typical composition of 1.5 wt % U - 7.2 wt % Th, recoveries by the grind-leach method were not very good, averaging about 91% for the U and 89% for the Th[1] even when the fuel was ground to -200 mesh. However, when leaching was followed by combustion of the graphite residue, recovery of both metals was approximately quantitative. In order to catalyze Th dissolution, a small concentration of fluoride ion is needed in the HNO_3 dissolvent.

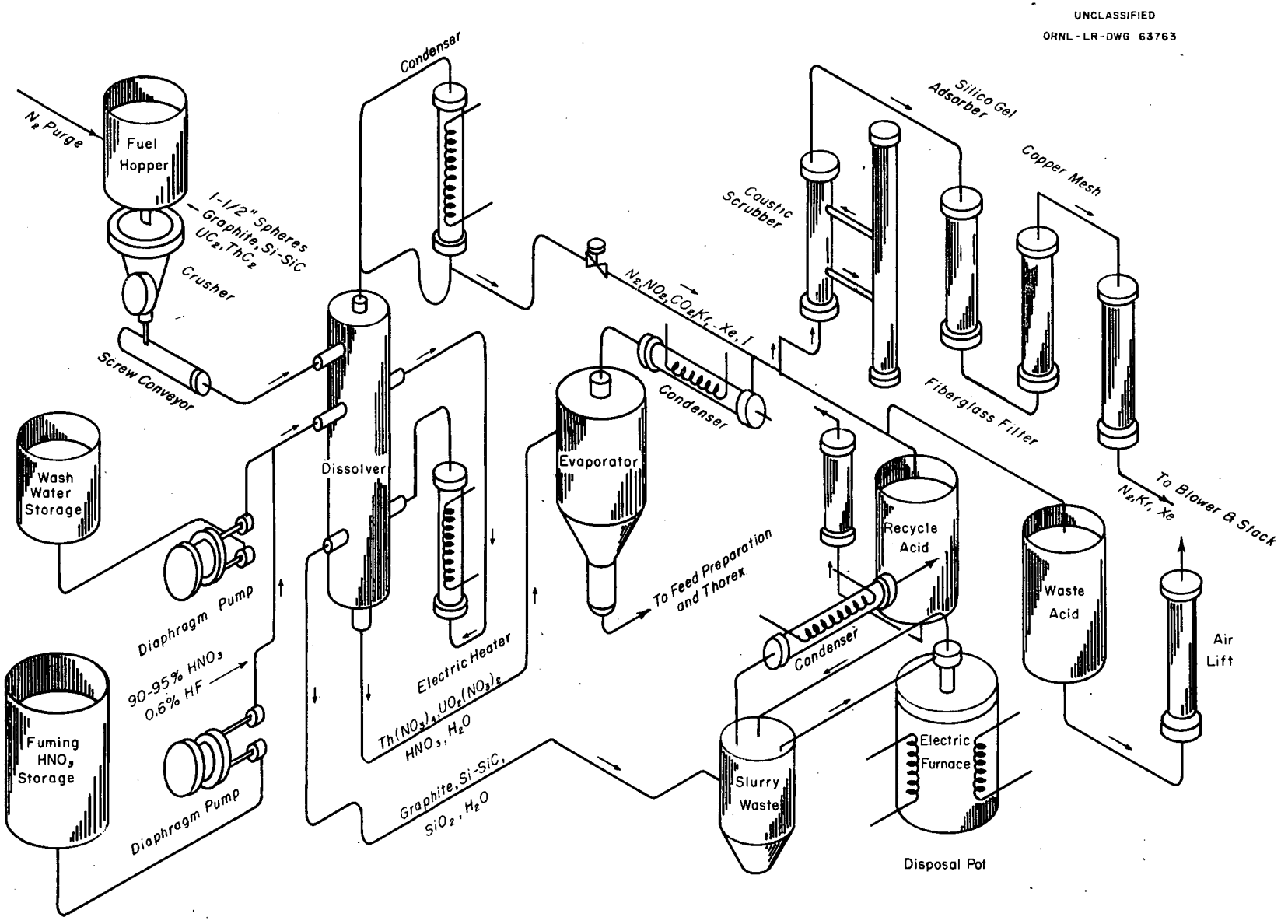

Fig. 7.1. Grind-Leach Process for Pebble-Bed Reactor Fuel.

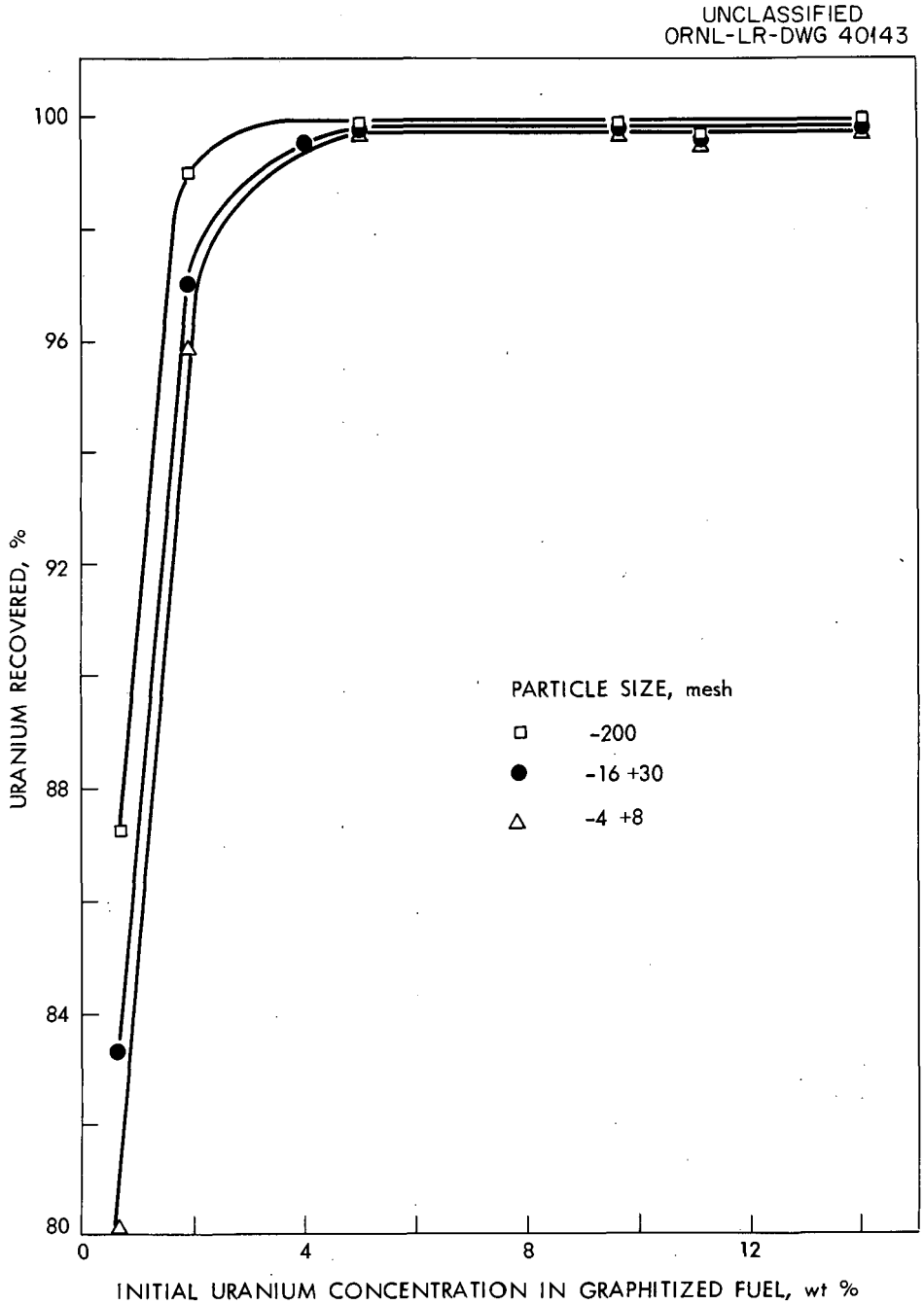

Fig. 7.2. Uranium Recovery as a Function of Initial Uranium Concentration in Admixture High-Density Graphitized Fuels After Leaching with Two Portions of Boiling Nitric Acid. First leach 50 ml of acid per 10-g sample, 4 hr reflux; second leach 25 ml of acid per 10-g sample, 4 hr reflux; thorough water washes after each leach.

Filtration and Evaporation. The digested ThC_2-UC_2-graphite mixture is filtered, and the residue is washed with water or dilute HNO_3. If combustion is not necessary, the cake is discarded to waste. The nitrate solution flows to an evaporator where HNO_3 is recovered for reuse and the remaining solution is adjusted in concentration to that required for solvent-extraction feed. Uranium, thorium, protactinium and fission products can be separated in a conventional Thorex plant previously described in Section 1.0.

Fuel Reconstitution. The products of the Thorex process are nitrate solutions of uranium and thorium which must be converted to the carbides dispersed in graphite for recycle to the reactor. These metallurgical (or ceramic) operations are described by Thurber, et al.[3]

7.2 Process Performance

The grind-leach process is capable of giving 99.9% recovery of uranium from uranium graphite fuels (no thorium) when uranium is present in concentrations greater than about 5 wt %. However, when both thorium and uranium are present, recoveries of both metals are only approximately 90%.

7.3 Process Limitations

The grind-leach process is limited in its ability to recover a high percentage of both Th and U from carbide type fuels in graphite, even when the fuel is ground to -200 mesh. For fuel compositions of < 3 wt % U (no Th) in graphite, recoveries in laboratory experiments are less than about 97% and become progressively worse as the uranium content becomes lower. Recoveries approaching quantitative values can be attained for Th-U carbide fuels by burning the leached graphite residue followed by dissolution of the ash in HNO_3 (Section 9.0). This requirement, however, produces large quantities of radioactive gas that may present a disposal problem.

7.4 Status of Development

The grind-leach process has been carried through the laboratory stage of development. Engineering scale experiments are underway.

7.5 Processing Cost

A capital cost estimate of a preliminary nature has been made by Hannaford[2] for a grind-leach process to treat 100 kg/day of pebble bed reactor fuel according to the flowsheet of Fig. 7.1. The fuel composition considered was ThC_2-UC_2-graphite (8.99-0.81-90.30 wt %). The fuel spheres were 1-1/2 in. diameter, each

covered with a thin Si-SiC clad. On this basis Hannaford arrived at a capital cost of $28.89 per kg of fuel as shown in Table 7.1. In order to get the total contribution of the grind-leach head-end process to the total fuel cycle cost, inventory and use charges on fissile and fertile materials would have to be added to the above figure.

Table 7.1. Estimate of Processing Cost for a Grind-Leach Process to Treat Pebble Bed Reactor Fuel[2]

Basis: 1 kg fuel

	$
Chemicals	0.803
Graphite disposal pots	14.00
Labor	4.85
Supervision (25% of labor)	1.21
Maintenance (6% of fixed capital)	0.586
Plant Supplies (15% of maintenance)	0.088
Utilities	0.101
Direct processing cost	21.64
Payroll overhead (15% of labor)	0.728
Laboratory (15% of labor)	0.728
Plant overhead (75% of labor)	3.64
Indirect processing cost	5.10
Depreciation (20%/yr of fixed capital)	1.953
Property tax (1%/yr of fixed capital)	0.098
Insurance (1%/yr of fixed capital)	0.098
Fixed processing cost	2.15
Total processing cost	28.89

REFERENCES

1. Mildred J. Bradley and L. M. Ferris, Recovery of Uranium and Thorium from Graphite Fuels. Laboratory Development of a Grind-Leach Process, ORNL-2761 (Mar. 17, 1960).

2. M. E. Whatley et al., Chemical Technology Division, Unit Operations Section Monthly Progress Report, June 1961, ORNL CF-61-6-70.

3. W. C. Thurber, et al., Oak Ridge National Laboratory Report on the Preparation of Thorium Fuels (in preparation).

4. Oak Ridge National Laboratory, Oak Ridge National Laboratory Status and Progress Report, June 1961, ORNL-3156 (July 11, 1961).

5. Oak Ridge National Laboratory, Oak Ridge National Laboratory Status and Progress Report, September 1961, ORNL-3211 (Oct. 9, 1961).

6. W. B. Tarpley and R. S. Winchester, Ultrasonic Leaching of Urania Impregnated Graphite Fuels, NYO-9581 (Apr. 1961).

7. Mildred J. Bradley and L. M. Ferris, Processing of Uranium Carbide Reactor Fuels. 1. Reaction with Water and HCl, ORNL-3101 (Aug. 1, 1961).

8. F. L. Culler, Jr., Chemical Technology Division Monthly Report for October 1960, ORNL CF-60-10-118 (Oct. 31, 1960).

9. F. L. Culler, Jr., Chemical Technology Division Monthly Report for November 1960, ORNL-CF-60-11-118 (Nov. 30, 1960).

8.0 FUMING HNO_3 PROCESS FOR GRAPHITE FUELS

8.1 Process Description

An alternate method to the grind-leach process has been developed[1] to eliminate the mechanical grinding operation. The process begins with a leaching operation using 90% HNO_3 in contact with ThC_2-UC_2-graphite fuel. The acid penetrates the graphite matrix causing the graphite to disintegrate into small particles approximately 150μ diameter. In this finely divided state, the metals are effectively dissolved.

As discussed above in Section 7.1, the leaching operation is followed by filtration, washing, evaporation, solvent extraction (Thorex) and fuel reconstitution.

8.2 Process Performance

Uranium and thorium recoveries > 99% have been obtained by the fuming HNO_3 disintegration method. The leaching operation is apparently insensitive to temperature since recoveries are about the same for digestion at 25°C or at boiling temperatures.

8.3 Process Limitations and Advantages

The fuming HNO_3 process has an advantage over the grind-leach method of not requiring a remote grinding operation. Also, whereas the grind-leach method gave very good uranium recovery only for fuels which contained no thorium, the fuming HNO_3 process gave > 99% recovery of both uranium and thorium. If almost quantitative metal recovery is required, combustion of the graphite followed by digestion of the ash in HNO_3 is necessary (see Section 9.0).

8.4 Status of Development

The fuming HNO_3 process is in the laboratory stage of development.

REFERENCE

1. Mildred J. Bradley, Oak Ridge National Laboratory, personal communication.

9.0 COMBUSTION-DISSOLUTION OF GRAPHITE FUELS

9.1 Process Description

A third method for the head-end treatment of carbide fuels dispersed in graphite is combustion-dissolution. The bulk of the fuel is ignited in oxygen to burn the graphite leaving behind an ash containing the recoverable metals and fission products. After combustion the ash is dissolved in HNO_3, adjusted to Thorex feed concentrations and routed through a solvent extraction plant.

9.2 Process Performance

The laboratory has been able to obtain almost quantitative Th and U recoveries from graphite fuels by this method. No larger scale operations have been tried.

9.3 Process Limitations and Advantages

The principal advantage of combustion-dissolution is that it permits high metal recovery. A serious disadvantage is the large volume of radioactive off-gas that must be processed to prevent atmospheric pollution. For some fuels, e.g., ThC_2-UC_2 coated with pyrolytic carbon, combustion-dissolution offers the only satisfactory method for recovering thorium and uranium.

9.4 Status of Development

Combustion-dissolution has been used in the laboratory as an ultimate recovery method for several kinds of thorium-uranium-graphite fuels that were not amenable to processing by the grind-leach or fuming nitric acid dissolution methods. No engineering or larger scale studies have been made.

10.0 ULTRASONIC LEACHING OF GRAPHITE FUELS

10.1 Process Description

Workers at Aeroprojects, Inc.,[1] have applied ultrasonic energy to leaching uranium from graphite fuels. In effect these experiments were an extension of the work of Bradley and Ferris[2] to improve the leaching efficiency particularly at low uranium concentrations. Samples were ultrasonically activated at a frequency of 20 kc in a 15.7 M HNO_3 solution, and in all cases it was found that ultrasonic leaching gave better recoveries than nonultrasonic leaching. In some experiments recoveries were as much as 5.5% larger, 99.5% versus 94.0% uranium recovered. These results may be compared with later laboratory tests at ORNL[3] in which better than 99% product recovery from low uranium content material was obtained by leaching with fuming HNO_3.

Ultrasonic leaching offers an advantage over the grind-leach method in that the grinding step might possibly be eliminated.

10.2 Process Limitations and Advantages

Although the ultrasonic leaching method eliminates a grinding operation that is certainly undesirable in a remotely operated plant, this operation is replaced by another mechanical operation that cannot be expected to be trouble-free. The vibrational equipment can also be expected to have maintenance problems. However, a great advantage to ultrasonic leaching would be the elimination of radioactive dust problems that would be associated with grinding.

10.3 Status of Development

Only laboratory experiments have been conducted on ultrasonic leaching. These experiments were designed primarily to determine if such a method could be favorably used in graphite fuel processing.

REFERENCES

1. W. B. Tarpley and R. S. Winchester, Ultrasonic Leaching of Urania Impregnated Graphite Fuels, NYO-9581 (Apr. 1961).

2. Mildred J. Bradley and L. M. Ferris, Recovery of Uranium and Thorium from Graphite Fuels. Laboratory Development of a Grind-Leach Process, ORNL-2761 (Mar. 17, 1960).

3. Mildred J. Bradley, Oak Ridge National Laboratory, personal communication.

11.0 PERFLEX PROCESS

The Perflex process is another head-end process for Thorex solvent extraction. It is designed to dissolve fuels containing uranium, zirconium, tin, and niobium either as pure metals or as alloys. No thorium fuels were considered in the development; however, the process should be able to treat thorium in combination with these metals. There might be a problem in thorium solubility since ThF_4 does not have a large solubility in aqueous solutions, so concentrations would have to be controlled to prevent precipitation.

As shown in Fig. 11.1, Perflex employs a solution of $HF-H_2O_2$. The laboroatory development was conducted on a 7% U-Zr-Sn alloy.[1]

11.1 Process Description

Perflex consists of two principal steps - dissolution and feed preparation. The operations are simple and swift.

Dissolution. The alloy fuel is contacted in a dissolver with 34.4 M HF - 1.7 M H_2O_2 solution. The reaction proceeds rapidly and is highly exothermic so that the dissolvent has to be added at a controlled rate. The principal reason for using H_2O_2 in the solution is to oxidize U(IV) and Sn;[1] nitric acid could also be employed for this purpose.

Feed Preparation. Feed preparation in Perflex is similar to feed preparation steps in other head-end processes. Nitric acid and aluminum nitrate are added to the dissolver solution to prepare aqueous nitrate feed. Not shown on the flowsheet is a feed adjustment step in which the feed solution is evaporated to obtain a 0.1 - 0.4 M HNO_3 deficient solution, a necessary requirement for a thorium-containing feed.

Gaseous Reaction Products. The principal gaseous reaction product of Perflex is hydrogen. Since hydrogen reacts with hydrogen peroxide, the total amount evolved will be less than the theoretical amount formed in the metal-acid reaction.

11.2 Process Performance

Complete recovery should be realized in this process because no waste solutions are removed for disposal.

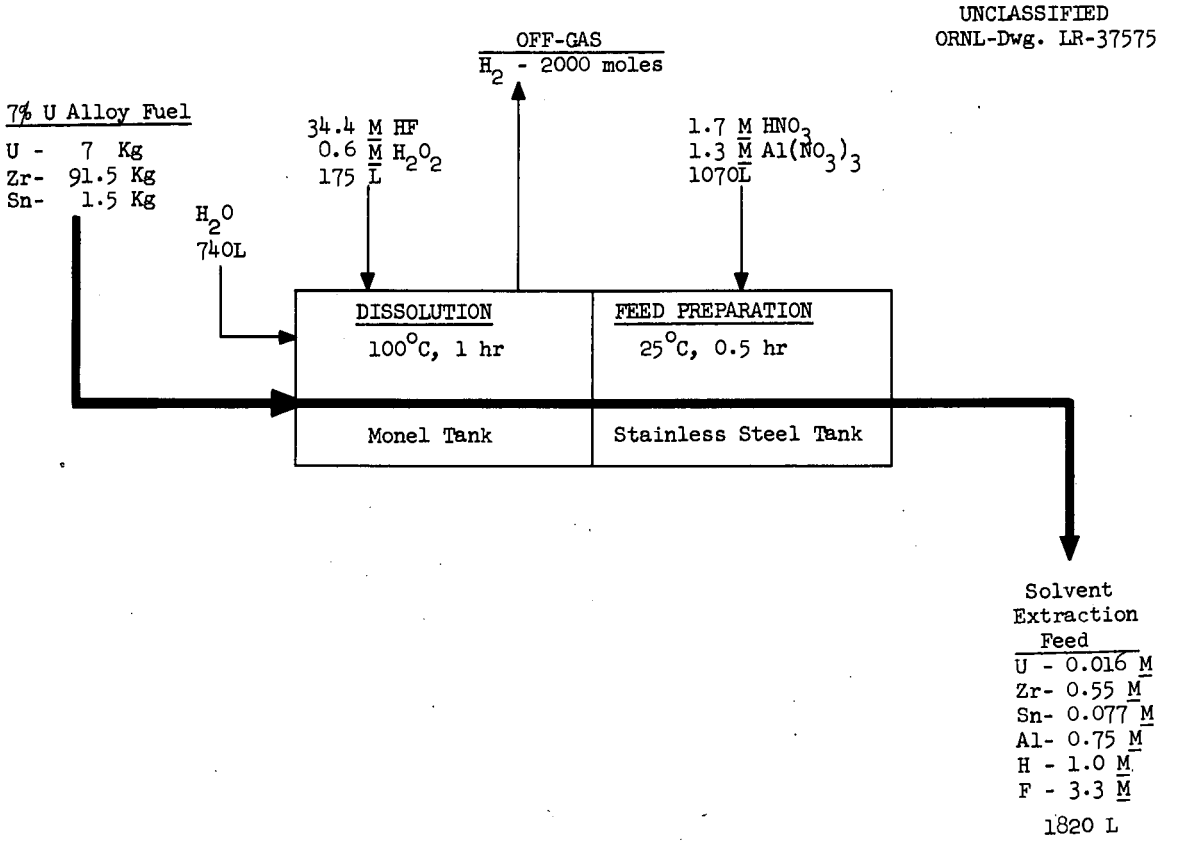

Fig. 11.1. Perflex Process for Dissolution of U-Zr Alloys in HF-H_2O_2.

11.3 Process Limitations and Advantages

The advantage of the Perflex process is in its simplicity; only one chemical operation is involved. Since the only waste product is a gas, product recoveries should be quantitative. The principal limitation or disadvantage to the process is that the alloying materials, Zr and Sn, are not separated from thorium and uranium and must consequently be separated in Thorex. This generates large volumes of aqueous waste.

Careful control of the amount of oxygen in the system will be necessary to prevent hydrogen-oxygen explosions in the off-gas.

11.4 Construction Materials

Several possible materials for dissolver construction have been tested in $HF-H_2O_2$ solutions with Monel and Ni-o-nel being the most resistant to corrosive attack.[1] When oxygen was excluded from the system, corrosion rates decreased 60% or more. Selected results from the work of Gens and Clark[1] are given in Table 11.1.

11.5 Processing Cost

No cost data have been prepared for this process.

11.6 Status of Development

Only laboratory scale investigations have been conducted on the Perflex process. Dissolution data and corrosion rates have been obtained. However, no work has been conducted with thorium present in the fuel.

11.7 Future Work

No work is planned on Perflex, and emphasis is being placed on processes such as Zircex and Modified Zircex for treating zirconium-type fuels. If Perflex were considered for a thorium-zirconium type fuel, considerable development at the laboratory and engineering scale would be necessary.

Table 11.1. Corrosion Rates of Several Alloys Exposed to Boiling 1 M HF - 0.05 M H_2O_2 Solution

Specimen Position	Corrosion Rate (mils/month)							
	Ni-o-nel		Carpenter 20		INOR-8		Monel	
	24 hr	48 hr	24 hr	48 hr	24 hr	48 hr	24 hr	48 hr
Vapor	0.32	4.6	0.36	1.9	13.7	13.6	13.4	13.1
	0.17	4.2	0.48	1.7				
Interface	5.4	15.5	10.1	14.1	47.2	32.0	24.2	22.4
	4.8	14.5	11.5	14.1				
Liquid	10.9	17.1	9.4	16.0	35.2	23.9	20.7	21.2
	11.0	17.1	9.1	17.1				

REFERENCE

1. T. A. Gens and W. E. Clark, Laboratory Development of the Perflex Process for Dissolution of Uranium Alloy Fuels in Hydrofluoric Acid - Hydrogen Peroxide Solutions, ORNL CF-59-11-23 (Nov. 10, 1959).

12.0 OXYHYDROCHLORINATION PROCESS

This process has been developed at ORNL[1] for processing U-Mo fuel. The development was conducted on the Consumers Public Power District (CPPD) reactor fuel which is a 90% U-10% Mo alloy clad in stainless steel. As is the case with the development of some other processing methods, no thorium was present in the fuel. However, it is believed that if thorium were a component of the alloy the same general method could be used. For this reason oxychlorination is discussed as a possible process for U-Th-Mo fuels.

12.1 Process Description

A diagram showing the five major operations of oxyhydrochlorination is presented in Fig. 12.1.[1] The first four operations are high-temperature gas-solid reactions, and the last is a relatively low temperature dissolution.

Can Removal. The initial operation is designated as "can removal" rather than "decladding" because prior to chemical processing the stainless steel clad is mechanically removed and the bare U-Mo alloy is replaced in an aluminum can. The can is removed by reaction with a 60% $HCl-N_2$ mixture at 300°C to vaporize Al_2Cl_6. It is important to exclude air from the reaction because of formation of a nonvolatile aluminum oxide ash.

Oxidation and Volatilization. The temperature is raised to 400°C, and a 15% HCl-air mixture is admitted to the reaction chamber. Both oxygen and HCl react with molybdenum to form the volatile oxychloride (MoO_2Cl_2). In the same process uranium is oxidized to U_3O_8, and if thorium were present it also would tend to go to the oxide rather than the chloride.[2]

The average Mo reaction rate is greater than 12 mg/cm^2 min.

Molybdenum Cleanup. It is difficult to remove more than about 90% of the Mo with the HCl-air mixture, so in a cleanup operation pure HCl is added to remove an additional 3% or more. It is desirable to have Mo removed to this extent to ensure stability of the nitrate solution prepared later for solvent extraction feed.

Chloride Cleanup. Residual chloride is exhausted from the oxide residue by contacting at 400°C with air containing a slight amount of water vapor. The tolerable limit on chloride in stainless steel solvent extraction equipment is about 175 ppm.

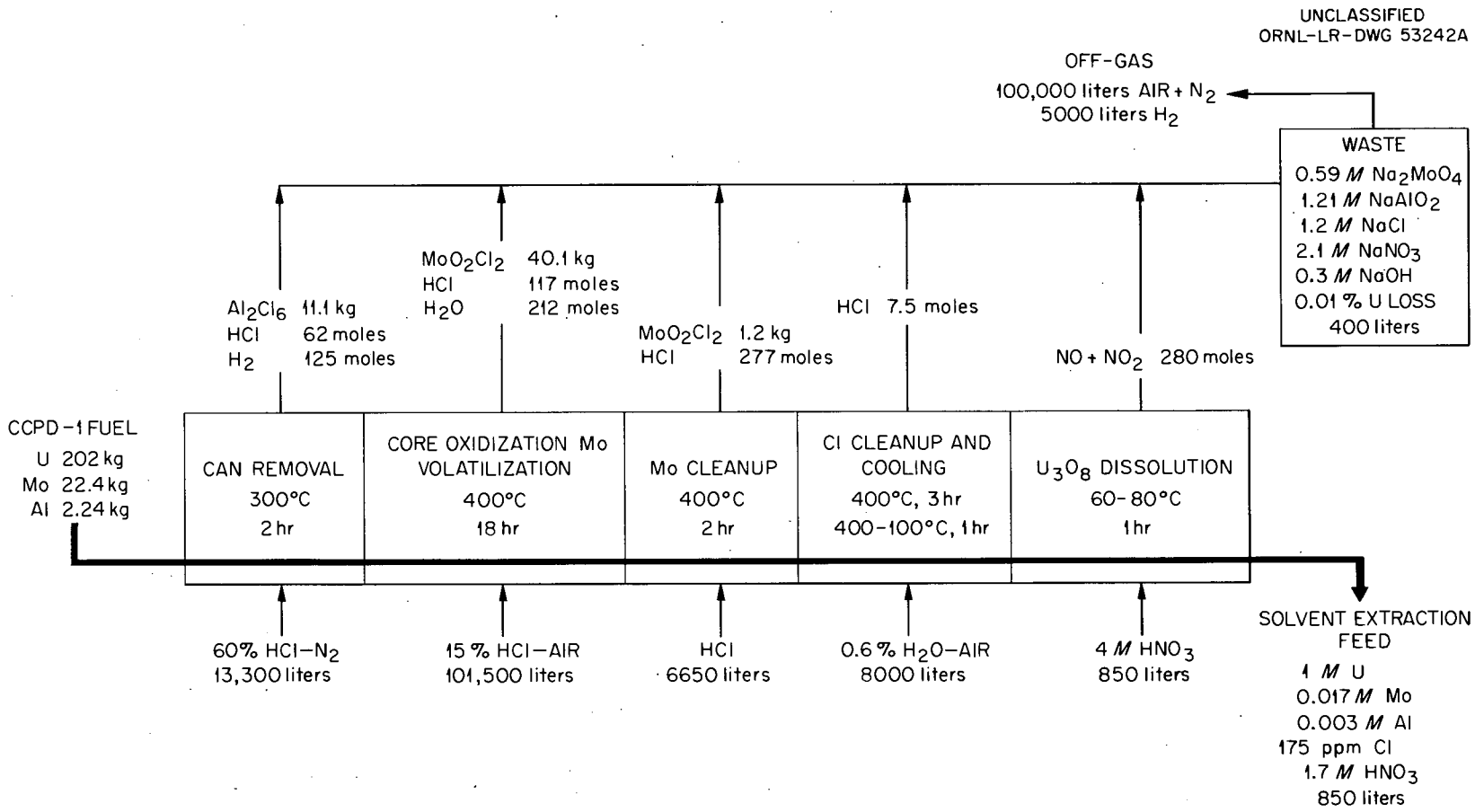

Fig. 12.1. Oxyhydrochlorination Flowsheet for Removal of Aluminum Can and Processing of CPPD Fuel.

Dissolution. The oxide residue is dissolved in nitric acid to prepare solvent extraction feed. The presence of thorium oxide in the residue would necessitate the use of regular Thorex dissolvent, which is nitric acid containing a little sodium fluoride. After dissolution the solution is made slightly acid deficient by evaporation for feed to Thorex (see Section 1.0).

Gaseous Reaction Products. As indicated on Fig. 12.1, a number of gaseous reaction products are produced. The laboratory treatment was to pass the off-gas through a caustic scrubber to form the corresponding sodium salts which were relegated to waste. The elemental gases H_2 and N_2 passed through the scrubber and were exhausted to the atmosphere.

12.2 Process Performance

Uranium losses are only about 0.01% in the oxyhydrochlorination process (Table 12.1). These losses are probably caused by entrainment of particles in the volatile aluminum and molybdenum off-gases and perhaps by some volatilization of uranium chlorides.

Thorium losses are expected to be no greater than uranium losses.

12.3 Process Limitations and Advantages

The primary advantage of oxyhydrochlorination is that the can and alloy materials are separated from the bulk of the recoverable materials in a simple gas-solid reaction, thereby decreasing the volume of aqueous waste from solvent extraction. Reasonably high purity of hydrogen chloride gas must be maintained to obtain smooth reaction rates; for example, oxygen or water vapor in the gas could passivate the aluminum surface. Since hydrogen is a reaction product, there is the usual H_2-O_2 explosion hazard in the off-gas.

The selection of materials of construction is limited because of the corrosive nature of high temperature chlorides.

12.4 Construction Materials

Materials that were suitable for Zircex process (Section 6.0) construction were examined in a 15% HCl-air mixture at 400°C. Results[1] of corrosion tests on four materials are given in Table 12.2; all materials appeared very resistent to attack.

Table 12.1. Performance of Oxyhydrochlorination Flowsheet Operations

Al Can Removal	
Reactants	60 % $HCl-N_2$
Reaction time (hrs)	2
Temperature (°C)	300
U in sublimate (%)	0.006
Al in sublimate (%)	99.2
Mo in sublimate (%)	1.4
Mo Removal	
Reactants	15% HCl-air
Reaction time (hrs)	20
Temperature (°C)	400
U in sublimate (%)	0.01
Al in sublimate (%)	0.0
Mo in sublimate (%)	~ 99
% Initial Material in Final Waste	
U	0.015, 0.005
Al	96 , 96.9
Mo	85.2, 93.8

Table 12.2. Corrosion Rates of Several Materials in a 15% HCl-Air Mixture at 400°C

	Corrosion Rate (mils/month)	
	24 hr	48 hr
Haynes 25	gain	0.06
Pyroceram	gain	gain
INOR-8	.02, .03	.03, < .01
Nichrome V	gain, .03	gain, .06

12.5 Processing Cost

No cost data are available for this process.

12.6 Status of Development

The flowsheet for oxyhydrochlorination has been demonstrated in the laboratory in some well-chosen experiments. However, it is believed that more laboratory development is needed and certainly larger scale engineering experiments before any plant design could be undertaken. Experience in handling high temperature chloride gases is required.

No development with thorium fuels has been undertaken.

12.7 Future Work

No work on oxyhydrochlorination is currently in progress nor is any planned.

REFERENCES

1. T. A. Gens, An Oxyhydrochlorination Process for Preparing Uranium-Molybdenum Reactor Fuels for Solvent Extraction: Laboratory Development, ORNL-3019 (undated).

2. T. A. Gens, Oak Ridge National Laboratory, personal communication (November 30, 1961).

3. R. E. Blanco, Chemical Technology Division Chemical Development Section B Monthly Progress Report, August 1960, ORNL CF-60-9-108 (January 6, 1961).

4. R. E. Blanco, Chemical Technology Division Chemical Development Section B Monthly Progress Report, September 1960, ORNL CF-60-10-91 (January 19, 1961).

13.0 BERYLLIUM OXIDE PROCESSES

Beryllium and beryllium oxide fuels have been proposed for gas-cooled reactors, and processing methods are being investigated at ORNL.[1] One of the fuels being studied is a pelletized BeO-base fuel containing 60-70% UO_2 clad in Hastelloy X; a second fuel under study is similar to this except that the U content is 10% or less. No work has been done on these fuels with thorium present, but the processing methods developed to date should apply with thorium present.

13.1 Process Description

Two methods of attack have been tried: (1) mechanical stripping or chopping of the cladding followed by leaching UO_2 from the BeO matrix; or (2) dissolving both clad and core in boiling aqua regia.[2] Aqueous reagents were used in dissolution and leaching in order to prepare solvent extraction feed.

Decladding and Dissolution - Low BeO Fuel. Experiments have been performed with UO_2-BeO fuels in which the BeO content was about 30%. Fuels that had been mechanically crushed to fracture or pulverize cladding and core were subjected to boiling solutions of 6-13 M HNO_3, 2 M HNO_3-4 M HCl, HNO_3-H_2SO_4 and HNO_3-NaF. All these reagents were successful in leaching UO_2 from the core, and in the case of aqua regia, the clad was also dissolved. It would not be advisable to use aqua regia as a decladding reagent because the rate of attack on the oxide core is fast enough to cause considerable uranium loss in the decladding solution.

The reagents, HNO_3-H_2SO_4 and HNO_3-NaF, dissolved both BeO and UO_2 in the fuel matrix. In the case of the first reagent it was found that the rate of UO_2 leaching decreased with increasing H_2SP_4 concentration up to 7 M H_2SO_4 regardless of the HNO_3 concentration. On the other hand, the BeO dissolution rate increased.

Dissolution times were in the range 6-30 hours.

Decladding and Dissolution - High BeO Fuel. Fuels in this category containing only 5-10% UO_2 are very resistant to common aqueous dissolvents. Reagents that have been tested for dissolving sintered BeO-5% UO_2 mixtures are H_2SO_4, HF-NH_4F, KF-HF, HNO_3, HNO_3-H_2SO_4, HNO_3-HCl and HF-HBF_4 solutions.

Approximate dissolution rates[2] for these solutions were respectively 0.01-3.5, 1.2-2.8, 0.006-0.36, 0.003-0.016, 0.0, 0.0 and 0.2-1.4, all rates being expressed in mg/min cm^2.

13.2 Process Performance

Process performance in the dissolutions of BeO-type fuels cannot be evaluated completely on the basis of the laboratory experiments that have been made; the most suitable process has not been established. Also all work to date has been performed on fuels containing no thorium. Some data,[2] however, on metal recovery from $BeO-UO_2$ fuel leached with boiling HNO_3 are presented in Table 13.1.

13.3 Process Limitations and Problems

A full appreciation of a process for $BeO-UO_2-ThO_2$ fuel cannot be stated because the process has not been sufficiently developed. Very stringent requirements will be placed upon materials of construction because of the corrosiveness of dissolution reagents. In order to avoid product loss, it might be necessary to pass all beryllium through the solvent extraction plant thereby creating large volumes of aqueous waste. At this time processing methods offer no means of recovering beryllium, a metal that is rather expensive to discard as waste.

Table 13.1. Uranium Losses on Leaching GCRE Fuel Pellets ($70\%\ UO_2-30\%$ BeO) With Boiling Nitric Acid

pellet: 0.4-0.5 g

acid: 100 ml

HNO_3 Concentration M	Leaching Time (hr)	Amount Remaining in BeO Residue (%)	
		U	Be
4	4.0	22.7	39.8
6	6.8	0.13	66.2
8	6.8	0.059	59.3
10	6.7	0.094	43.2
10	6.8	0.12	50.3
13	6.8	0.12	48.8

13.4 Construction Materials

An evaluation of construction materials has not been made.

13.5 Processing Cost

No cost data are available.

13.6 Status of Development

A process for $BeO-UO_2$ fuels is in the initial stages of laboratory development. No engineering scale tests have been made and no fuels containing thorium have been used in the experiments.

13.7 Future Work

Work is continuing on the laboratory scale toward finding a suitable way of preparing solvent extraction feed from these fuels.

REFERENCES

1. F. L. Culler, Chemical Technology Division Annual Progress Report for Period Ending May 31, 1961, ORNL-3153 (Sept. 14, 1961).

2. K. S. Warren, L. M. Ferris, and A. H. Kibbey, Dissolution of BeO- and Al_2O_3-Base Reactor Fuel Elements, Part I, ORNL-3220 (in press).

3. K. S. Warren and L. M. Ferris, Processing of Beryllium Oxide Fuels, ORNL CF-61-2-3 (February 13, 1961).

4. R. E. Blanco, Chemical Technology Division Chemical Development Section B Monthly Progress Report, March 1961, ORNL CF-61-4-108 (August 19, 1961).

5. R. E. Blanco, Chemical Technology Division Chemical Development Section B Monthly Progress Report, February 1961, ORNL CF-61-3-50 (July 24, 1961).

6. R. E. Blanco, Chemical Technology Division Chemical Development Section B Monthly Progress Report, January 1961, ORNL CF-61-2-61 (May 15, 1961).

7. R. E. Balnco, Chemical Technology Division Chemical Development Section B Monthly Progress Report, December 1960, ORNL CF-60-12-100 (May 15, 1961).

8. R. E. Blanco, Chemical Technology Division Chemical Development Section B Monthly Progress Report, November 1960, ORNL CF-60-12-99 (April 6, 1961).

9. R. E. Blanco, Chemical Technology Division Chemical Development Section B Monthly Progress Report, October 1960, ORNL CF-60-11-87 (February 14, 1961).

14.0 MECHANICAL PROCESSING

Two forms of mechanical processing have been developed for the head-end treatment of clad fuel elements. These are mechanical dejacketing and shear-and-leach. The processes have been developed at ORNL.[1]

14.1 Mechanical Dejacketing

Mechanical dejacketing was developed specifically for removing the stainless steel clad from SRE fuel elements. The procedure is to saw the ends off the tubular element, expand the clad by hydraulic pressure, and push the metal core from the expanded shell. In case the core cannot be pushed from the shell, provision has been made to slit the clad longitudionally for removal of the core.

The process has been developed and operated remotely to declad SRE core 1 assemblies having an average burnup of 675 Mwd per ton. Fuel assemblies have been declad at a rate of 2-3 kg U/hour. After the fuel core has been removed, further processing is accomplished by suitable solvent extraction techniques.

14.2 Shear-and-Leach

A companion process to mechanical dejacketing is the shear-and-leach process that has been developed for stainless steel clad uranium dioxide or stainless steel clad mixed thorium oxide-uranium dioxide fuel. The process is designed to handle pelletized fuels that are not amenable to ejection from a tube by the methods employed in mechanical dejacketing. All steps of the process are designed for remote operation.

Fuel-bearing tubes are introduced to the shear and chopped into 1-inch long pieces which are picked up by a conveyor and transported to an inclined-drum leacher (Fig. 14.1). The small fuel pieces are moved upward through the drum by a screw and are contacted by a countercurrent stream of concentrated nitric acid containing a small concentration of fluoride ion. The mixed ThO_2-UO_2 core is dissolved, and the empty stainless steel shells are discharged at the top. The leacher rotates at about one revolution per hour.

The product is a uranyl and thorium nitrate solution which is made into acceptable Thorex feed by methods discussed in Section 1.1. The stainless steel waste is compacted for volume reduction and stored as radioactive waste.

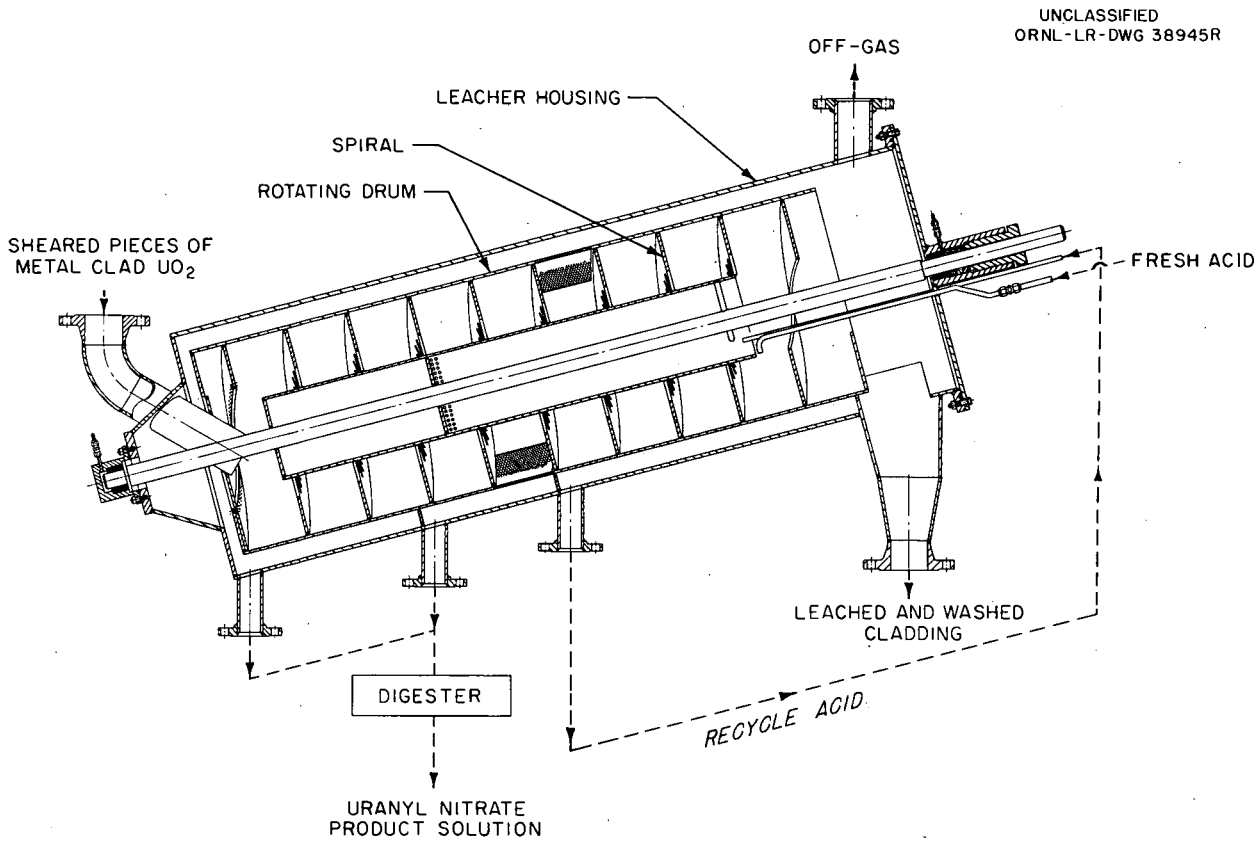

Fig. 14.1. Inclined-Drum Leacher for Countercurrent Nitric Acid Leaching of UO from Sheared Pieces of Metal-Clad UO_2.

14.2.1 Process Performance

The chemical operation, namely, ThO_2-UO_2 dissolution, has been well-established in connection with the development of Thorex and other solvent extraction processes. The principal area of development in the shear-and-leach process was the perfection of the remote mechanical operations of shearing, conveying, leaching, and compacting. The feasibility of these operations has been demonstrated on an engineering scale.

14.2.2 Process Limitations, Advantages and Problems

The process might be limited in handling short-cooled material as might be required from a breeder reactor because of heat removal problems and probable maintenance requirements of mechanical equipment. Lubrication of such machinery may complicate servicing; molybdenum disulfide suspended in water appears to be the best lubricant. The mechanical shear creates ThO_2-UO_2 fines which are difficult to handle in the transport and feeding mechanisms.

The principal advantage of shear-and-leach is the production of minimum volume solid waste. There is no waste disposal problem with compacted stainless steel shapes. Aqueous waste volumes from solvent extraction can be considerably reduced by not having to contain the clad in solution. Also, the extremely corrosive chemical reagents and involved head-end procedures needed to dissolve stainless steel are avoided. (See Sulfex process, Section 2.0 and Darex process, Section 3.0.)

14.2.3 Processing Cost

The cost of processing stainless steel clad-UO_2 fuel at a rate of 2.66 tons U/day by the shear-and-leach method has been estimated by Adams and co-workers.[2] The estimated cost was $2.71/kg uranium. The same study gave an estimated cost of $15.78/kg uranium by the Sulfex process.

14.2.4 Status of Development

All mechanical shear-and-leach operations have been demonstrated on an engineering scale, and the technological feasibility has been established. Only "cold" operations have been performed.

14.2.5 Future Work

Nonradioactive operation is continuing in preparation for demonstrating the process using irradiated material.

REFERENCES

1. F. L. Culler, Chemical Technology Division Annual Progress Report for Period Ending May 31, 1961, ORNL-3153 (Sept. 14, 1961).

2. J. B. Adams, A. M. Benis, and C. D. Watson, Comparative Cost Study of Processing Stainless Steel Jacketed UO_2 Fuel. Mechanical Shear-Leach Versus Sulfex Core Dissolution, ORNL-3227 (in press).

3. F. R. Bruce, R. E. Blanco, and J. C. Bresee, Recent Developments in Feed Preparation and Solvent Extraction, ORNL CF-58-11-91 (Mar. 20, 1959).

4. M. E. Whatley, Chemical Technology Division Unit Operations Section Monthly Progress Report, March 1961, ORNL CF-61-3-67 (Sept. 28, 1961).

5. M. E. Whatley, Chemical Technology Division Unit Operations Section Monthly Progress Report, February 1961, ORNL CF-61-2-65 (July 28, 1961).

6. M. E. Whatley, Chemical Technology Division Unit Operations Section Monthly Progress Report, January 1961, ORNL CF-61-1-27 (July 5, 1961).

7. M. E. Whatley, Chemical Technology Division Unit Operations Section Monthly Progress Report, December 1960, ORNL CF-60-12-28 (May 18, 1961).

8. M. E. Whatley, Chemical Technology Division Unit Operations Section Monthly Progress Report, November 1960, ORNL CF-60-11-38 (July 5, 1961).

9. M. E. Whatley, Chemical Technology Division Unit Operations Section Monthly Progress Report, October 1960, ORNL CF-60-10-49 (Apr. 5, 1961).

10. F. L. Culler, Jr., Chemical Technology Division Monthly Report for October 1961, ORNL-TM-45 (Oct. 30, 1961).

11. F. L. Culler, Jr., Chemical Technology Division Monthly Report for September 1961, ORNL-TM-18 (Sept. 29, 1961).

12. F. L. Culler, Jr., Chemical Technology Division Monthly Report for August 1961, ORNL CF-61-8-95 (Aug. 31, 1961).

15.0 STAINLESS STEEL CHLORINATION

Investigations have been conducted at Brookhaven National Laboratory[1] on a method of decladding stainless steel clad fuels through the use of gas-solid reactions at high temperature. No results have been reported in which actual reactor fuel was used, but data were reported for the reaction of stainless steel and chlorine gas. Reaction rates were obtained at several temperatures and are given in Table 15.1.

Table 15.1. Reaction Rates for Stainless Steel Chlorination

Temperature (^{o}C)	Reaction Rate (mg/cm^2 hr)
480	9
580	57
660	395
690	1080
710	1330

At these temperatures chlorine gas presents a serious corrosion problem. The authors suggested that the reaction be carried out in the center of a fluidized bed of inert insulator such as a ceramic material in such a way that the walls of the vessel could be maintained at a much lower temperature. An experiment was performed to demonstrate this principle in which a type 316 stainless steel coupon was chlorinated at a central zone temperature of 620-665°C while the vessel wall was held at 480-510°C. The inert bed material was not specified.

Stainless steel chlorination might be considered as part of a head-end treatment to prepare stainless steel clad ThO_2-UO_2, stainless steel clad Th-U metal or stainless steel clad ThC_2-UC_2 fuels for solvent extraction. However, no conclusion can be made about the feasibility of such a process without additional data. At these temperatures chlorine would almost certainly volatilize uranium as UCl_4 (see Zircex Process, Section 6.0) and carbon or graphite as CCl_4. There would be a problem of selectively condensing UCl_4 from the stainless steel reaction products in order to make the desired separation of clad and fuel.

REFERENCES

1. J. J. Reilly, W. H. Regan, E. Wirsing, and L. P. Hatch, Status Report - Reprocessing of Reactor Fuels by Volatilization Through the Use of Inert Fluidized Beds, BNL-663 (May 1961).

2. N. Hilberry, Argonne National Laboratory Reactor Development Program Progress Report, November 1960, ANL-6269 (Dec. 15, 1960).

16.0 THORIUM OXIDE-BISMUTH SLURRY

The Liquid Metal Fuel Reactor proposed a ThO_2-Bi slurry as a fertile stream and had a rather involved Thorex head-end treatment to prepare the fuel for solvent extraction. The operations[1] in this process are shown in Fig. 16.1.

16.1 Process Description

Phase Separation. The 12 wt % ThO_2-Bi slurry is contacted with argon gas in a phase separator at 1000°F to float ThO_2 particles which are skimmed off in a manner similar to slagging operations in the metallurgical industry. Thorium oxide particles are assumed to carry approximately their weight of bismuth. Argon is continuously recycled through the filters to remove entrained particles.

Filtration and Washing. The ThO_2-Bi sludge and "clean" bismuth leave the phase separator by different routes. The sludge enters a filtration system in which it is washed with mercury which dissolves bismuth. The cake is blown off the filter with argon onto a second filter which removes the last traces of mercury. At this time the ThO_2 cake is considered sufficiently free of carrier materials and is transported to the Thorex feed make-up system by argon gas. Solids and gas are separated in a cylcone separator; the solids are dissolved in concentrated HNO_3 containing a little fluoride ion and fed to a Thorex plant (see Section 1.0).

Bismuth Recovery. The remaining operation in the head-end treatment is to recover bismuth from the circulating mercury stream. The mercury system operates at almost the saturation temperature of mercury as a pressure of 180 psia, the heat being supplied by the decay energy of fission products and protactinium in the filter cakes. The high pressure Hg-Bi solution is flashed in an evaporator to accomplish the primary separation. Most of the mercury is vaporized and returned to the system after condensation. Liquid bismuth containing the rest of the mercury is distilled; the still bottoms contain less than 1 ppm mercury. Recovered bismuth returns to the reactor system.

Fission Product Removal. Fission products are assumed to stay in the thorium dioxide particles and be separated in the Thorex plant. Any fission products that extract into the mercury or bismuth in the filtration step accumulate in the bottoms of the mercury still.

Unclassified
ORNL-LR-DWG 55766

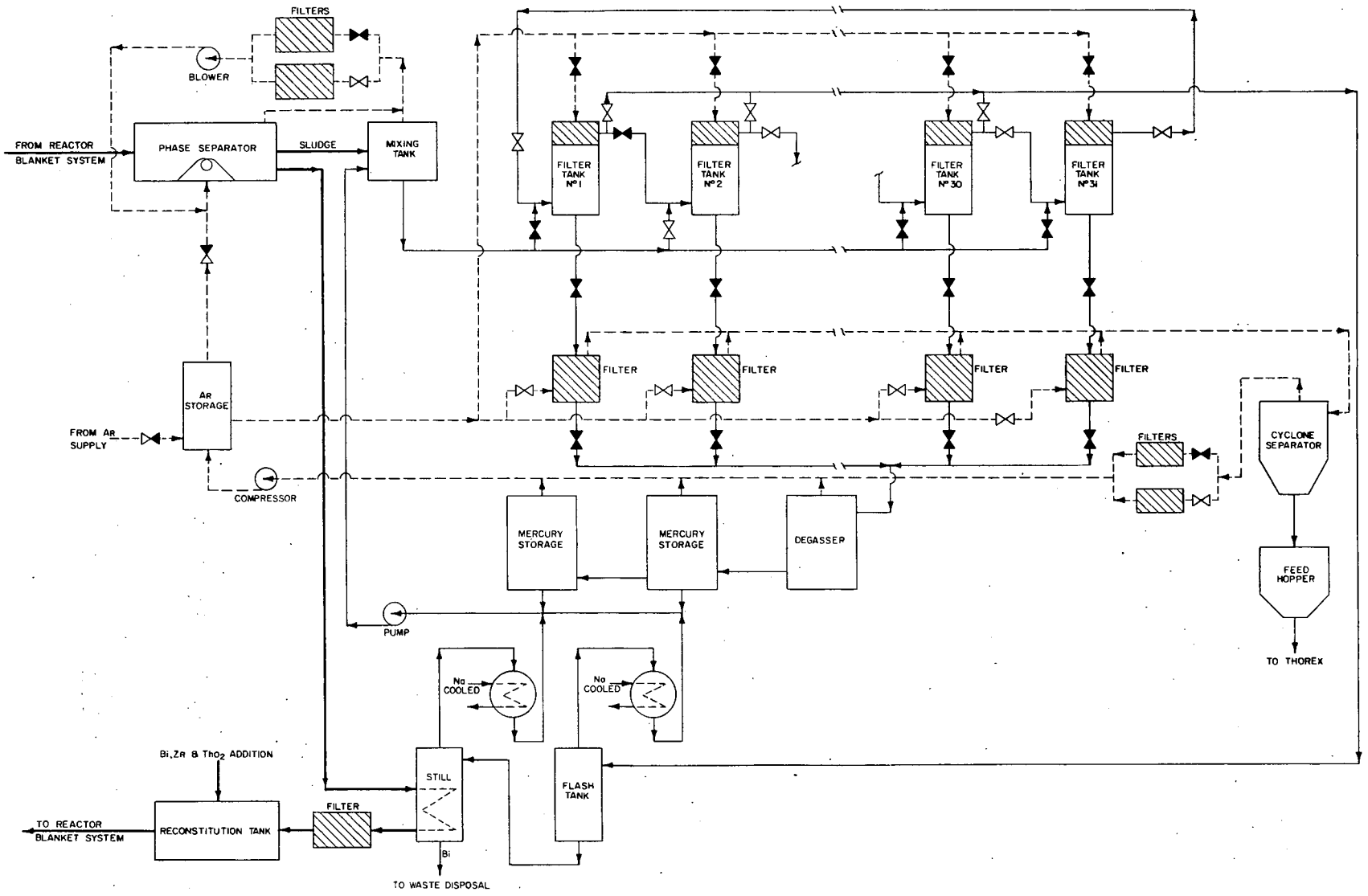

Fig. 16.1. Head-End Process Flow Sheet for LBBR Fertile Stream Processing.

16.2 Process Performance

No data are available.

16.3 Process Limitations and Advantages

This head-end process involves several high temperature operations that may be difficult to perform particularly with radioactive material; the filtration is an example. Mercury is a highly undesirable material to have in a nuclear reactor; therefore, the separation of mercury and bismuth must be highly efficient to avoid poisoning the reactor. The process is difficult to appraise without additional development data.

16.4 Processing Cost

In conjunction with the design of a liquid metal reactor by Babcock and Wilcox[1] a cost estimate was made for a power station employing an on-site chemical processing plant. The plant was to develop 1065 Mwt and have a positive breeding ratio in a blanket of ThO_2-Bi slurry. For this system the capital cost of the head-end treatment section was estimated to be $1,668,600 for a processing rate of about 6 ft^3/day.

16.5 Status of Development

Considerable laboratory and engineering scale tests were made on this system before the project was terminated. However, more engineering and pilot plant data are needed before a ThO_2-Bi processing method can be designed.

REFERENCES

1. C. E. Thomas, et al., The Liquid Metal Thorium Breeder Reactor, BAW-1171 (January 1960).

2. L. G. Alexander, et al., Thorium Breeder Reactor Evaluation. Part 1. Fuel Yield and Fuel Cycle Costs in Five Thermal Breeders, ORNL CF-61-3-9 (undated).

3. The Babcock and Wilcox Company Atomic Energy Division, Liquid Metal Fuel Reactor Experiment Reference Design Report, BAW-1019 (August 1957).

FUSED FLUORIDE SALT PROCESSES:

FLUORIDE VOLATILITY

and

HEAD-END AND TAIL-END PROCESSES FOR FLUORIDE VOLATILITY

17.0 FLUORIDE VOLATILITY PROCESS

The volatility of uranium hexafluoride at room temperature has long been considered in processing schemes for recovering decontaminated uranium from irradiated fuel. This and other factors have stimulated much interest in the use of molten fluoride salts such as $LiF-BeF_2-ThF_4-UF_4$ for reactor fuels. Considerable development has been carried out on a method of recovering uranium from fluoride salts,[1] but development of a process for recovering thorium from these salts has been more limited. The diagram in Fig. 17.1 presents the fluoride volatility process for recovering uranium from a $LiF-BeF_2-ThF_4-UF_4$ molten salt. The diagram also indicates some incompletely developed schemes that have been investigated for decontaminating the uranium-free salt for recovery of thorium and other valuable salt components. These several schemes are discussed in subsequent sections.

17.1 Fused Salt Fluoride Volatility

The fluoride volatility process may also be used for processing solid fuels which can be dissolved in molten fluoride salts. Zirconium- and beryllium oxide-clad fuels are examples.

17.1.1 Process Description

Uranium contained in the molten salt is removed by fluoride volatility according to the reaction

$$UF_4 + F_2 \xrightarrow{500\text{-}600^\circ C} UF_6 \ .$$

Molten salt is contacted with fluorine gas in a batchwise or continuous operation. Uranium recovery is quantitative. The principal fission products that volatilize are ruthenium, niobium and zirconium which volatilize as fluorides.

<u>Absorption-Desorption</u>. The volatilized uranium hexafluoride is cooled to about 100°C and passed into granular beds of sodium fluoride for additional decontamination. Sodium fluoride complexes UF_6 according to the reaction

$$UF_6(g) + 3NaF(s) \xrightarrow{\sim 100^\circ C} UF_6 \cdot 3NaF(s).$$

Niobium and zirconium also absorb on NaF; however, ruthenium is not retained and has to be condensed in a cold trap.

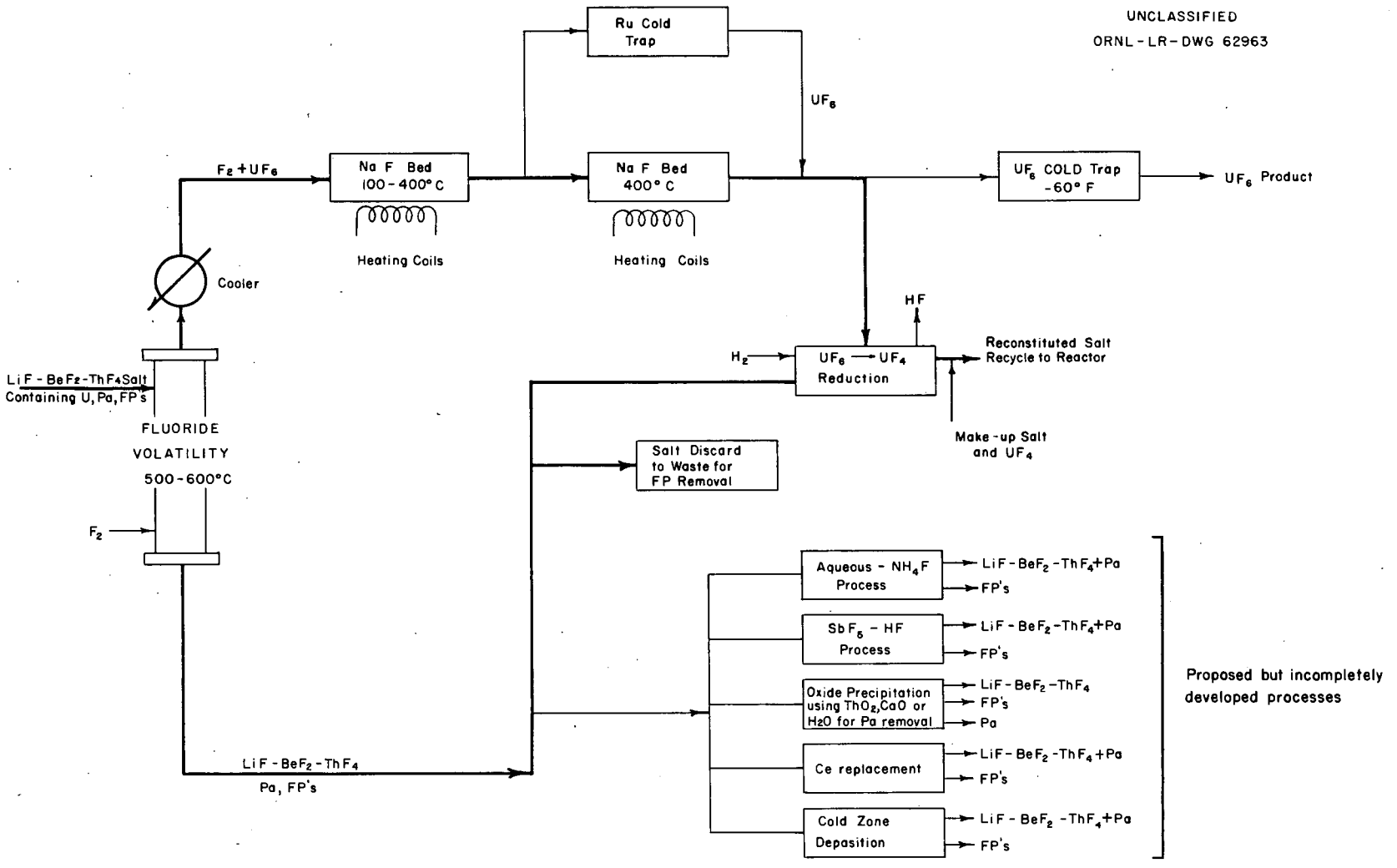

Fig. 17.1. Processing Methods for ThF_4-UF_4 in Molten Salt Solution.

When the NaF bed becomes saturated with UF_6, the temperature of the bed is raised to about 400°C at which temperature the complex decomposes. Niobium and zirconium, however, remain absorbed. Fluorine gas is normally passed through the bed at this time to transport UF_6 through a second NaF bed for additional Nb and Zr decontamination.

Product Recovery. Uranium hexafluoride product is recovered by desublimation on a cold surface at -60°F. The product can be melted by allowing the temperature of the cold trap to exceed the triple point conditions which are 64°C and 1134 mm Hg.

Product Reduction. In an integrated reactor-chemical plant complex employing a molten fluoride salt for fuel it would be desirable to recycle the decontaminated uranium to the reactor. As shown in Fig. 7.1, UF_6 can be mixed with H_2 and burned in a reduction chamber.

$$UF_6 + H_2 \longrightarrow UF_4 + 2HF$$

The reaction is usually started by feeding UF_6 into a hydrogen-fluorine flame.

Fuel Reconstitution. The reconstitution of a molten salt fuel is a relatively simple operation. It is necessary only to dissolve recovered UF_4 in a bath of $LiF-BeF_2-ThF_4$.

Fission Product Removal. The salt stream leaving the bottom of the fluorinator contains the bulk of the fission products but is free of uranium. Further chemical processing of this salt to recover decontaminated $LiF-BeF_2-ThF_4$ has been the subject of research, but no satisfactory process has been developed. The fission products can be removed, however, by discarding a portion of the salt as waste on each pass through the chemical plant. This salt is then replaced with fresh make-up salt.

17.1.2 Process Performance

Over-all fission product decontamination factors in fluoride volatility are very good and comparable to those obtained in solvent extraction. Typical values[2] for selected fission products are given in Table 17.1. Gross β and gross γ decontamination factors are of the order 10^7 - 10^9, and total rare earth decontamination factors are quite large being about 10^{11}.

Table 17.1. Step Decontamination Factors for Fluoride Volatility Process

Activity	Decontamination Factors		
	Fluorination	Absorption-Desorption	Over-all
Gr β	4×10^5	2×10^3	2×10^9
Gr γ	3×10^5	2×10^2	6×10^7
Ru γ	4×10^3	1×10^2	1×10^7
Zr γ	5×10^4	1	9×10^4
Nb γ	4×10^3	6	8×10^5
Cs γ	4×10^5	3×10^3	2×10^9
Sr β	1×10^7	$> 5 \times 10^2$	$> 5 \times 10^9$
TRE β	2×10^7	$> 5 \times 10^3$	$> 1 \times 10^{11}$

TRE = total rare earths

Uranium recovery from the molten salt is very high as shown by the results[2] of some typical fluorinations given in Table 17.2. Recoveries as high as 99.9% are anticipated under production conditions.

The principal impurities found in product UF_6 are Cr, Mo, Tc and Np (Table 17.3).[2] Chromium appears because it is a corrosion product from the reaction vessel[(a)] and its fluorides are comparatively volatile. Molybdenum is an end product of several fission product decay chains and is also a component of the vessel material; molybdenum hexafluoride (MoF_6) forms quite readily in the fluorinator and is volatile. Cathers has observed that MoF_6 complexes NaF to form $MoF_6 \cdot NaF$ on the absorption bed and that the complex has a MoF_6 partial pressure of 760 mm Hg at about 130°C. Consequently the $UF_6 \cdot 3NaF$ and $MoF_6 \cdot NaF$ complexes decompose at about the same temperature.

(a) INOR-8 or Hastelloy N

Table 17.2. Uranium Recovery in Selected Fluorinations

Run No.	Temp., °C	Fluorination Time, hr	F_2 Flow Rate, ml/min, STP	Amount U Volatilization,[a] % of total inventory
8	500	4	300	97.9
8	520	4	300	99.4
10	500	3	340	99.2
11	520	3	340	99.9
12	500	3	430	99.8

[a]Original uranium concentration in salt in all runs was < 1%.

Table 17.3. Impurities in UF_6 Products

Run No.	Amount, ppm of U			
	Cr[a]	Mo	Np	Tc
8	200	10,100	260	1,020
9	290	5,200	240	490
10	150	2,200	58	260
11	80	2,500	310	240
12	< 100	1,200	290	60

[a]Probably from corrosion of the cold trap during the hydrolysis of the product to obtain a representative aqueous sample.

The fluorides of neptunium and technitium also volatilize in the fluorination step. The NaF trap is reasonably effective in retaining these two fluorides; nevertheless, some technitium accompanies uranium through the trap.

17.1.3 Process Limitations and Advantages

The most serious limitation to the fluoride volatility process is that of containment of the extremely corrosive fluoride compounds in contact with fluorine gas. Secondly, the process does not offer a means whereby thorium-containing fuels can be processed for thorium recovery, nor is there a completely satisfactory method for removing fission products from the salt solution for recovery of decontaminated fuel carrier. Other less serious limitations are those of obtaining a high decontamination from Mo and Tc in the UF_6 product and the lack of technology in operating a high temperature molten fluoride system. Considerable enlightenment on the latter problem should be developed through the operation of the Molten Salt Reactor Experiment.

The major advantage of fluoride volatility is the ease with which uranium can be separated from all the principal components of the molten salt mixture. The chief operation is gas-liquid contact for which considerable technology is available in a large number of industries. Large decontamination factors from most fission products are obtained. A further advantage is in waste disposal because of the relatively small volume and nature of the salt-fission product mixture.

17.1.4 Construction Materials

INOR-8, which is also identified as Hastelloy-N, has been developed in conjunction with research on molten fluoride salts and is the best known containment material.

17.1.5 Processing Cost

The capital investment in a chemical processing plant for fluoride volatility has been estimated for cost and performance studies on molten salt breeder reactors.[3,4] These estimates were based on a previous design study and cost estimate by Weinrich and Associates.[5] Since the cost estimates were prepared for two-region, breeding systems in which fuel and fertile streams were processed separately, two cost curves were developed from Weinrich's data. These are given in Figs. 17.2 and 17.3.

The curve of Fig. 17.2 was developed for processing 530 ft^3 of a fuel salt containing no thorium at cycle times in the range 2-500 days. Only one point on the curve was obtained from the cost estimate and that corresponded to a 27-day fuel cycle; the remainder of the curve up to a 75-day cycle time was generated by assuming that the capital cost was proportional to the 0.6 power

UNCLASSIFIED
ORNL-LR-DWG 54794

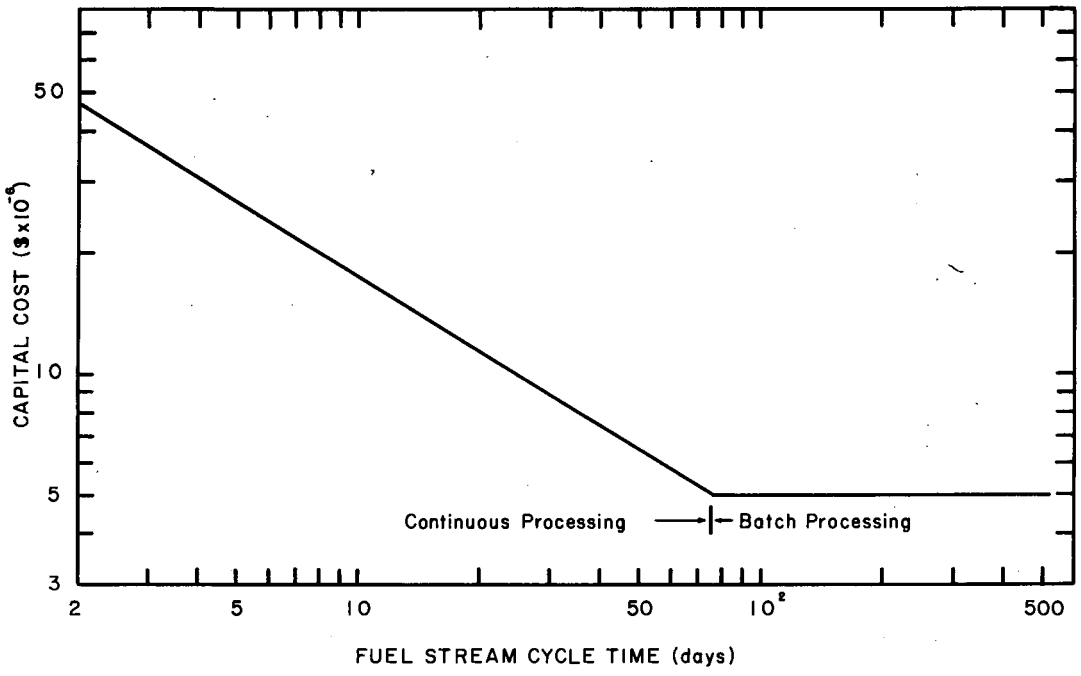

Fig. 17.2. Capital Cost of Fuel Stream Processing Plant for a Molten Salt Breeder Reactor.

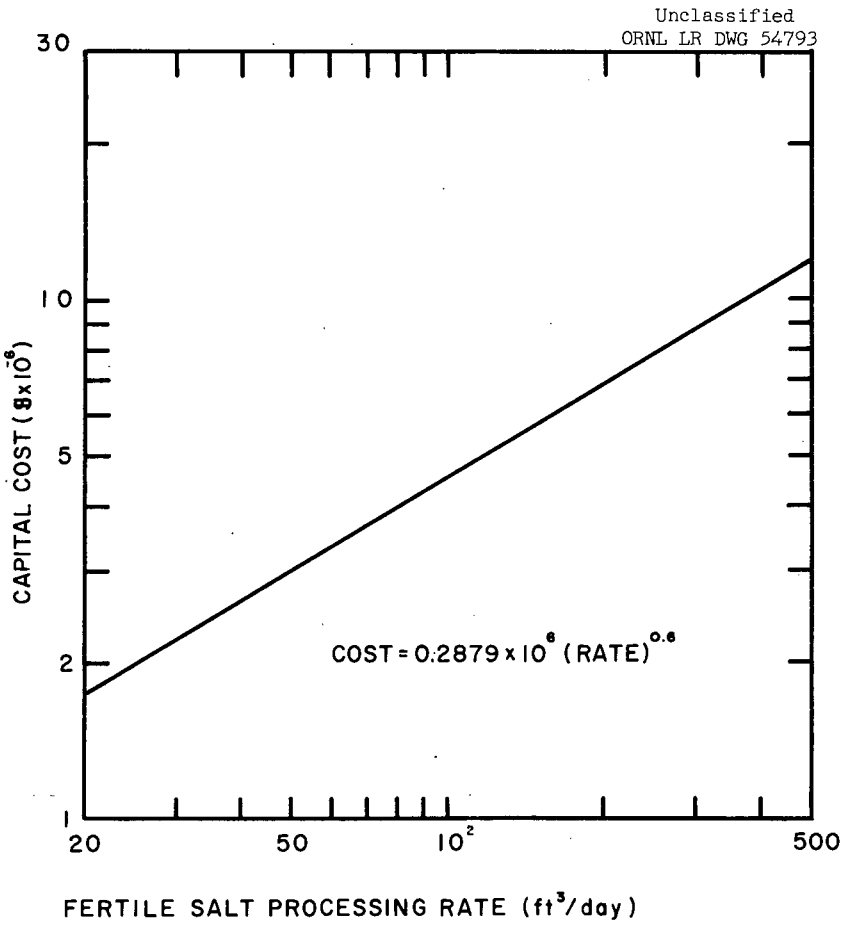

Fig. 17.3. Capital Cost of MSBR Fertile Stream Processing Plant.

of the processing rate. At rates corresponding to the 75-day cycle or longer time, it was assumed that batch processing would apply and that the capital cost of the batch plant would be constant over a wide range of processing rates. The capital costs as read from Fig. 17.2 include facilities for fluorination uranium recovery plus HF dissolution (see Section 19.1) for recovery of decontaminated carrier salt.

The curve of Fig. 17.3 was developed for processing a thorium-containing salt by fluoride volatility only. As mentioned above the basic cost data were available at only one processing rate, namely 20 ft^3/day, and the remainder of the curve was generated by assuming the cost to be proportional to the 0.6 power of processing rate. In this case only fluoride volatility and associated equipment are included in the estimate since no satisfactory tail-end process exists for recovering and decontaminating a thorium-containing salt.

17.1.6 Status of Development

The fluoride volatility process has been demonstrated in a pilot plant at ORNL in processing irradiated Aircraft Reactor Experiment fuel. Uranium has been recovered by fluorination, but the demonstration of the $UF_6 \rightarrow UF_4$ reduction step has not been made with irradiated material. However, this reduction has been done with nonirradiated material.

Recovery of barren salt from the fluorinator bottoms containing thorium has not been demonstrated.

17.2 Direct Halogenation Process

Argonne National Laboratory[7] is investigating the recovery of uranium and plutonium from solid fuels by fluoride volatility methods. This development is directed primarily toward methods of processing fast reactor fuels and not toward thorium fuels; however, the procedures may be somewhat applicable to thorium fuels and will be described here.

17.2.1 Process Description

The Argonne process has been applied to stainless steel clad UO_2 fuel. The solid fuel is placed in a bed of granular material; e.g., calcium fluoride, which is inert to the process reagents, the inert material serving strictly as a heat transfer medium to control the reaction rate. Chlorine

gas or a mixture of chlorine and carbon tetrachloride is reacted with the fuel at about 600°C to form volatile chlorides of the stainless steel components and uranium. These volatile chlorides are conducted into a second zone of inert material where hydrogen fluoride is introduced to convert these same chlorides to the corresponding fluorides which are not volatile. The third step is fluorination in which fluorine is admitted to the zone containing the fluorides to volatilize uranium hexafluoride which is recovered by adsorption on sodium fluoride as described in Section 17.1.

17.2.2 Process Performance

All the gas-solid reactions in the direct halogenation process are highly exothermic and proceed rapidly once they are initiated by raising the temperature of the reactants to about 600°C. Rates for the chlorination step have been measured[7] and are reported in Table 17.4.

Only a limited amount of research has been done to determine the behavior of fission products in these operations. Some experiments were carried out to determine the behavior of Ru-106 and Nb-95 in the fluorination of uranium dioxide. It was found that both ruthenium and niobium volatilized as fast (perhaps faster in the case of Ru) as uranium; the presence of calcium fluoride or zirconium fluoride as inert heat transfer media had no influence on the behavior of these fission products.

17.2.3 Process Limitations and Advantages

Perhaps the principal limitation on direct halogenation is the lack of technology in carrying out high temperature chlorinations and the difficulty in controlling the reaction rate. In this respect the inert, fluidized bed technique seems to have definite promise of success. There is some trouble with the production of fines and sintering.

A big advantage is realized in the simplification of uranium recovery in a rapid, quantitative reaction that produces a product with a relatively high degree of decontamination. Radioactive wastes are produced in minimal volume and in the solid state thus decreasing storage expense.

Further limitations might be imposed by the addition of thorium to the fuel. The chlorides of thorium are not volatile and would remain in the first reaction zone with the bulk of the fission products, and a process for decontaminating the thorium (other than aqueous solvent extraction) has not been developed. Having to discard the thorium as waste would add appreiable cost to the fuel cycle.

Table 17.4. Reaction of Stainless Steel Type 304 with Chlorine in a Fluidized Bed of Abrasive Grain Alundum

Fuel Description: Tube, 3/8 inch diameter, 4-3/8 inches long, 35 mil wall, closed ends

Chlorination Temp. (°C)	Hydrofluorination Temp. (°C)	Cl_2 Flow Rate (g mole/hr)	HF Flow Rate (g mole/hr)	Mole % Cl_2[a]	Stainless Steel Penetration Rate (mils/hr)[b]
575	500	8.8	9.2	88	4.6
575	500	7.9	8.1	87	4.9
625	500	8.1	6.6	87	-
625	500	5.0	6.0	48	-
625	500	5.0	5.7	48	10.4
625	500	5.0	7.5	48	11.3
625	500	4.3	6.9	39	5.5
625	500	2.7	6.3	27	4.2
625	500	1.3	5.7	13	3.3

(a) Remainder N_2 diluent

(b) Based on initial surface area, weight loss and total reaction time.

17.2.4 Construction Materials

Satisfactory materials of construction for the chlorinator have not been developed. Nickel and Inconel have been used in laboratory and engineering tests, but these show appreciable corrosion rates at temperatures as high as about 600°C. It has been reported[8] that at 575°C and 625°C nickel and Inconel corrode at rates of about 10 and 35 mils/month, respectively.

17.2.5 Status of Development

Work is being conducted in small, engineering scale equipment to study the behavior of gas-solid reactions and to develop methods of controlling the highly exothermic reactions. Only scouting experimental results have been reported with radioactive materials.

As stated above, ANL is primarily interested in processing uranium-plutonium fuels, and none of their investigations included thorium.

REFERENCES

1. F. W. Miles and W. H. Carr, Engineering Evaluation of Volatility Pilot Plant Equipment, ORNL CF-60-7-65 (Sept. 30, 1960).

2. G. I. Cathers, R. L. Jolley, and E. C. Moncrief, Hot Cell Demonstration of the Fused Salt Volatility Process, ORNL CF-60-3-11 (June 3, 1960).

3. L. G. Alexander, W. L. Carter, et al., Thorium Breeder Reactor Evaluation. Part 1. Fuel Yields and Fuel Cycle Costs in Five Thermal Breeders, ORNL CF-61-3-9 (Apr. 1961).

4. W. L. Carter and L. G. Alexander, Thorium Breeder Reactor Evaluation. Part 1. Fuel Yields and Fuel Cycle Costs of a Two-Region, Molten Salt Breeder Reactor, ORNL CF-61-8-86 (Aug. 18, 1961).

5. Weinrich and Associates, Process Designs and Estimated Costs of Chemical Plants for Reprocessing Molten Salt Reactor Fuels, report to Chemical Technology Division of ORNL from Weinrich and Associates, 1518 K Street, N. W., Washington, D. C. (June 1959).

6. G. I. Cathers, W. H. Carr, et al., "Recovery of Uranium from Highly Irradiated Reactor Fuel by a Fused Salt-Fluoride Volatility Process," Proceeding of the Second International Conference on the Peaceful Uses of Atomic Energy held in Geneva, 1958, paper No. P/535.

7. S. Lawroski, Argonne National Laboratory Chemical Engineering Division Summary Report for January, February, March 1961, ANL-6333 (June 1961).

8. S. Lawroski, Argonne National Laboratory Chemical Engineering Division Summary Report for October, November, December 1960, ANL-6287 (Mar. 1961).

9. S. Lawroski, Argonne National Laboratory Chemical Engineering Division Summary Report for July, August, September 1960, ANL-6231 (undated).

10. S. Lawroski, Argonne National Laboratory Chemical Engineering Division Summary Report for January, February, March 1960, ANL-6145 (undated).

11. S. Lawroski, Argonne National Laboratory Chemical Engineering Division Summary Report for October, November, December 1959, ANL-6101 (Feb. 1960).

18.0 HEAD-END PROCESSES FOR FLUORIDE VOLATILITY

Fuels which contain zirconium either as an alloying material or as a clad for uranium metal lend themselves very well to processing by fluoride volatility because of the solubility of zirconium tetrafluoride in molten salt mixtures. Two head-end processes have been investigated for these fuels, hydrofluorination and Zircex.[1,2]

18.1 Hydrofluorination

Hydrofluorination perhaps should be considered as an integral part of the fluoride volatility process since the initial development of fluoride volatility included this step before fluorination. The hydrofluorination step was the first operation in treating a heterogeneous, zirconium-bearing fuel.

Solid fuel elements, such as Zr-U alloy or Zr-U-Th alloy, are immersed in a bath of molten fluoride salts such as $NaF-ZrF_4$ or NaF-LiF which have a melting point around 550°C. Anhydrous hydrogen fluoride is then bubbled through the bath to react with the fuel dissolving it in the molten salt mixture. Zirconium, uranium, and thorium can be dissolved in this way. Cathers[1] obtained dissolution rates up to 0.1 g/cm^2 min by this procedure. Reaction rates were proportional to the degree of agitation of the melt which was effective in removing reaction products from the surface of the metal being dissolved.

The hydrofluorination step has been demonstrated in the fluoride volatility pilot plant. Oxide-type fuels cannot be dissolved in this manner.

18.2 Zircex

Process Description. The Zircex process (see discussion above in Section 6.0) can be used as a head-end for fluoride volatility as well as solvent extraction by Thorex. However, in the case of fluoride volatility the type of fuel is limited to zirconium-clad metal, Zircaloy-clad metal or zirconium alloy fuel; no oxide-type fuels can be processed. The process has not been demonstrated with thorium as a fuel component, but the reactions of thorium should be similar to those of uranium.

The flowsheet presented in Fig. 18.1 gives the steps for the Zircex head-end for fluoride volatility. The initial step is hydrochlorination in which the heterogeneous fuel element is heated to approximately 500°C and reacted with anhydrous hydrogen chloride. The principal reactions are the chlorination of zirconium and uranium according to

$$Zr(s) + 4\ HCl(g) \longrightarrow ZrCl_4(g) + 2H_2(g)$$

$$U(s) + 3\ HCl(g) \longrightarrow UCl_3(s) + 1.5\ H_2(g).$$

Both reactions are exothermic.

A separation of the bulk of the zinconium and uranium is accomplished by removing the $ZrCl_4$ vapor from the hydrochlorinator. When Zircaloy is the alloying or clad material, the tin component is also vaporized as the tetrachloride. Uranium trichloride is dissolved in a mixture of molten $NaF-ZrF_4$; the resulting solution is fluorinated to recover uranium as UF_6. Thorium would also be chlorinated and dissolved in the molten salt.

The carrier salt could be cycled a number of times between the dissolution and fluorination steps. The bulk of the fission products would collect in the salt during each cycle, and it would be necessary to dispose of the salt only when the fission product content became intolerably high. Thorium would also collect in the salt after each cycle and would be relegated to waste with the fission products. A build-up of thorium in the salt possibly could govern the rate of discard by increasing the melting point of the salt to an undesirable value.

Process Performance. The rate of reaction in the hydrochlorination step is given by the curves[2] of Fig. 18.2. The rate increases with temperature and uranium content of the fuel.

Since UCl_4 is volatile at hydrochlorination temperatures, some loss of uranium might be expected in the $ZrCl_4$ sublimate. In a series of runs using STR multiplate fuel assemblies, Perona[2] and co-workers found losses to be less than 0.1%. Selected results are shown in Table 18.1. The oxidation of U to U(IV) is not the predominant reaction with HCl.

Process Limitations and Advantages. The Zircex head-end for fluoride volatility has the advantage of separating the bulk of the alloying and diluent material from the fuel. Waste disposal volumes are thereby decreased. The separated zirconium is produced as a solid, making disposal easier. The carrier salt may be reused a number of times in the dissolution and fluorination steps before disposal.

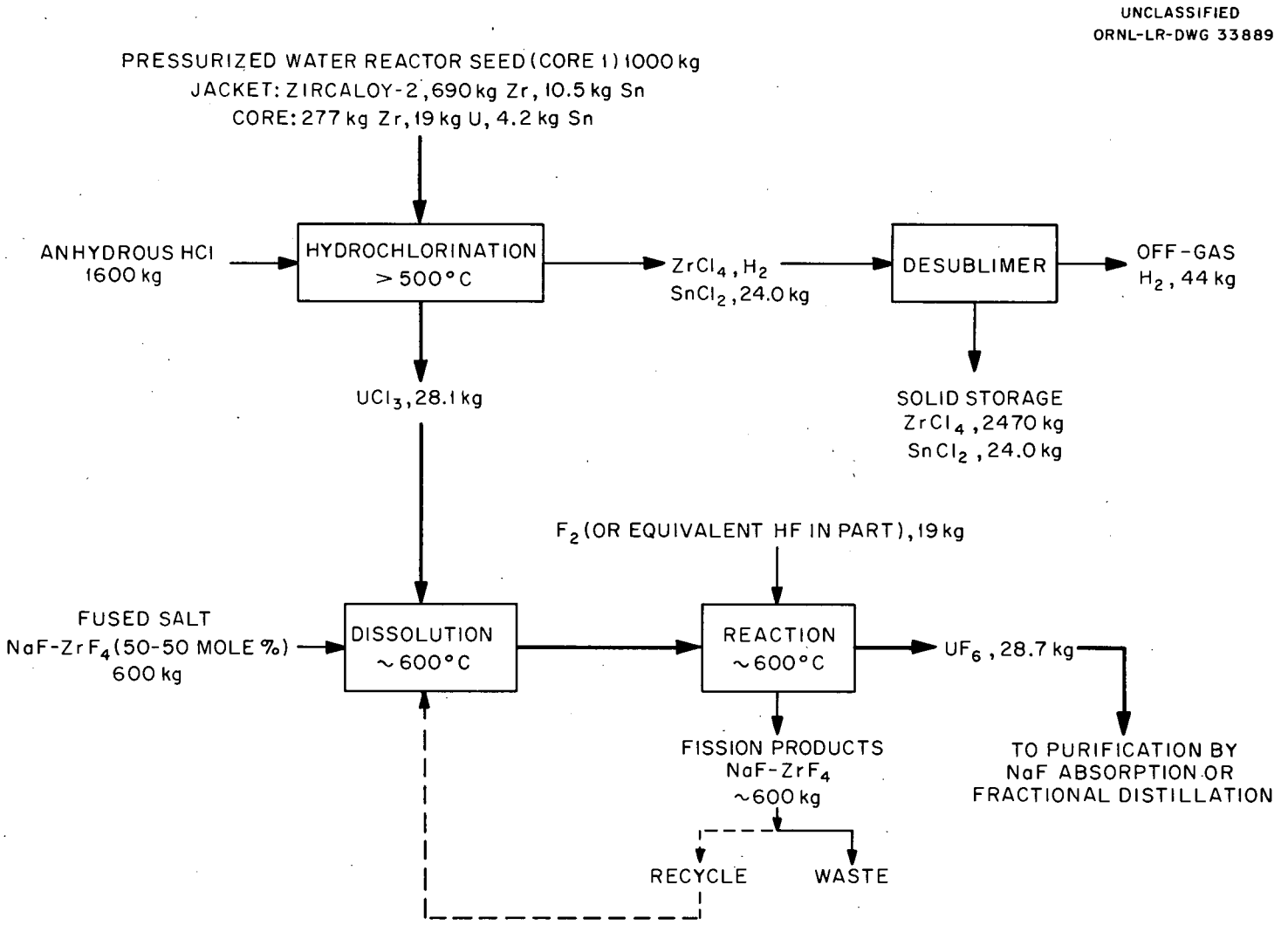

Fig. 18.1. Zircex Process for Hydrochlorination of Fully Enriched Fuels with Purification by the Fluoride Volatility Process.

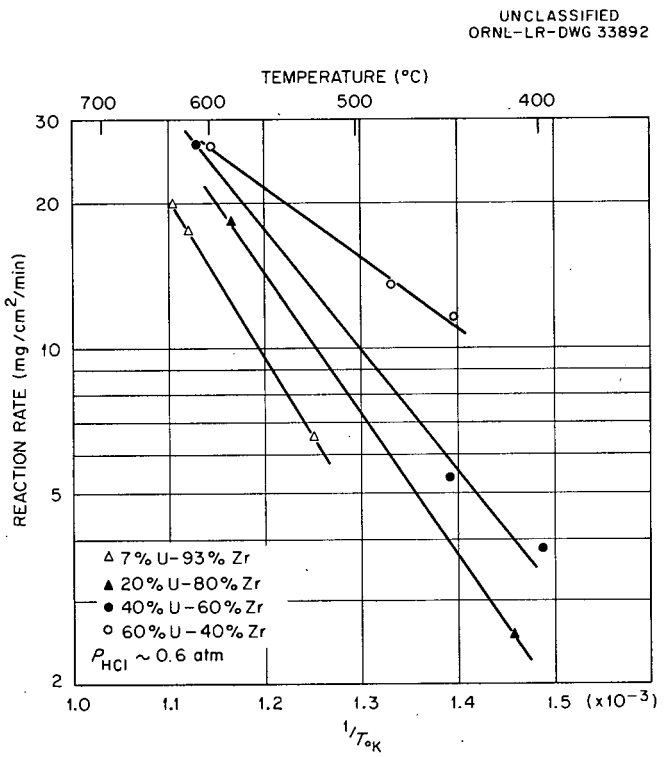

Fig. 18.2. Reaction Rates of Zirconium-Uranium Alloys with HCl as a Function of Temperature and Composition.

Table 18.1. Uranium Losses to $ZrCl_4$ Sublimate in Hydrochlorination of STR Multiplate Fuel Assemblies

Average Reaction Rate (mg/cm^2 min)	Uranium Loss to Sublimate (%)
1.0	0.095
1.3	0.058
1.5	0.065
2.3	0.043
2.5	0.012
2.9	0.029
4.2	0.014
5.5	0.057

Limitations to this type of operation are the lack of technology for large-scale hydrochlorinations and the inability to recover thorium. No satisfactory method exists for reclaiming thorium from the molten salt. Also, an oxide film on the zirconium surface tends to passivate the metal to attack by HCl gas making hydrochlorination difficult.

Construction Materials. An evaluation of several possible materials of construction has been carried out by Batelle Memorial Institute.[3] These materials were exposed to the hydrochlorination cycle in a series of cylcic tests, and the results shown in Table 18.2 were obtained. None of the materials showed excessively high corrosion rates with Illium R, Hastelloy C and nickel showing no attack. A material satisfactory for performing both hydrochlorination and dissolution in the same vessel has not been found.

Processing Cost. No cost data are available.

Status of Development. The Zircex process has been investigated in the laboratory and on an engineering scale. Hydrochlorination tests have been made on fuel assemblies weighing as much as 7 kg. Limited tests have been conducted with irradiated material to determine fission product distribution. From the engineering studies some knowledge of the kinetics and heat transfer properties of the system have been gained.

No work has been conducted with fuels containing thorium.

Table 18.2. Performance of Several Materials of Construction for the Zircex Process in Dry Hydrogen Chloride at 400-600°C

Material	75 Cycles		Remarks Based on Metallographic Examination
	Weight Change (mg)	Corrosion Rate by Metallography (mils/100 cycles)	
Haynes 25	+2	2.1	General attack
Type S-816	+39	0.5	Slight intergranular attack
Type S-590	-133[a]	2.0	Severe intergranular attack
Inconel	+67	0.0	Slight surface attack
Illium R	+46	0.5	No attack
Hastelloy B	+157	1.1	Slight intergranular attack
Hastelloy C	+70	0.0	No attack
Nickel	+95	dimensional increase[b]	No attack

(a) Weight change corresponding to rate of 0.3 mils per 100 cycles.

(b) Possibly due to plastic flow of material during polishing.

18.3 Beryllium-Type Fuels

Only a very limited amount of work has been conducted on the processing of beryllium-type fuels by fluoride volatility. It has been reported[7] that beryllium oxide based fuels can be dissolved by HF in molten fluoride salts with uranium recovery by fluorination. In the light of present knowledge, there would be no way to recover either thorium or beryllium from the salt solution.

REFERENCES

1. G. I. Cathers, W. H. Carr, et al., "Recovery of Uranium from Highly Irradiated Reactor Fuel by a Fused Salt-Fluoride Volatility Process," Proceedings of the Second International Conference on the Peaceful Uses of Atomic Energy held in Geneva, 1958, paper No. P/535, United Nations, New York (1958).

2. J. J. Perona, J. B. Adams, et al., Status of the Development of the Zircex Process, ORNL-2631 (Mar. 17, 1959).

3. C. L. Peterson, P. D. Miller, J. D. Jackson and F. W. Fink, Construction Materials for Various Head-End Processes for the Aqueous Reprocessing of Spent Fuel Elements, BMI-1375, (Aug. 28, 1959).

4. P. R. Amman, D. A. Madden, and D. L. Swift, Zircex Fluoride Volatility Combination, KT-339 (Mar. 20, 1958).

5. T. R. Jaworowski and C. J. King, III, Zircex Uranium Sublimate Loss, AECU-3750 (KT-310) (Jan. 24, 1958).

6. T. J. Carter, Jr., and R. A. Stone, Zircex Kinetics and Uranium Loss Study, AECU-3751 (KT-319) (Nov. 13, 1957).

7. R. E. Blanco, L. M. Ferris, and D. E. Ferguson, Aqueous Processing of Thorium Fuels, ORNL CF-61-6-14 (June 22, 1961).

19.0 TAIL-END PROCESSES FOR FLUORIDE VOLATILITY

Although the separation of uranium from a molten fluoride salt is well developed, the separation of thorium and the remainder of the salt from fission products is not so well known. Several processes for decontaminating a thorium-containing salt have been considered and are discussed below. None of the processes have been developed beyond a few laboratory experiments and are not being pursued currently.

19.1 HF Dissolution

A method worked on by Campbell[1] for decontaminating a uranium-free salt which contained no thorium is HF dissolution; this process consisted in dissolving the $LiF-BeF_2$ salt in a $HF-H_2O$ (90-10%) solution. Rare earth fission products are insoluble in the solution and can be separated by filtration thereby removing the bulk of the neutron poisons. Other fission products, particularly the alkali metals and the alkaline earths, are soluble and could be removed only by discarding a portion of the salt on each cycle through the reactor. However, when the HF dissolution process was applied to a thorium-containing salt, Campbell found that thorium precipitated with the rare earths. The method, therefore, is unsatisfactory for salt decontamination and has merit only if thorium can be discarded, a practice that perhaps could not be followed for extended periods of time.

19.2 Aqueous-NH_4F

In an effort to find a solvent which would distinguish between thorium and rare earths, Campbell[1] investigated the use of NH_4F solutions. Thorium fluoride is practically insoluble in water but has a solubility of about 45 g/ℓ in 50 vol % NH_4F solution at 105°C. The solubility decreases at lower temperatures. Lithium fluoride is considerably less soluble in 50 wt % NH_4F (0.5 g/ℓ at 100°C), and its presence is known to depress the solubility of ThF_4. However, it was thought that the process might offer possibilities for separating thorium from the remaining salt.

A few laboratory-scale experiments were tried with not too encouraging results. The synergistic effect of lithium and thorium was to reduce greatly the solubility of both probably through the formation of a $LiF-ThF_4$ compound. Even when some solution did occur, there was a tendency for precipitation to occur later.

This process does not appear attractive unless steps are taken to remove LiF first; however, this procedure would require a second dissolution step with a different solvent.

19.3 SbF_5-HF

It had been shown by Clifford and co-workers[2] that rare earth fluorides are soluble in SbF_5-HF solutions. Campbell[1] undertook some scouting experiments to verify Clifford's results and to investigate the behavior of LiF-BeF_2-ThF_4 salt containing fission products in these solutions. Most of Campbell's experiments were carried out on the simpler system consisting of LiF and rare earth fluorides in the presence of SbF_5-HF solutions to identify reaction products and mechanisms of reaction. In this respect he concluded that the rare earth fluorides were indeed quite soluble, of the order 200-300 g/ℓ in 20 wt % SbF_5. The lithium component of the salt formed a fine, white precipitate identified as $LiSbF_6$.

A LiF_6BeF_2-ThF_4 (67-18-15 mole %) mixture containing trace quantities of rare earth fluorides was treated by the SbF_5-HF process to determine the behavior of thorium and rare earths. First it was necessary to remove the lithium component by dissolving in 95% Hf-5% H_2O to preclude its interference. After LiF removal, the remaining solids were treated with 5 vol % SbF_5 in HF. These experiments were only qualitative at the best and indicated that ThF_4 is insoluble in the process and that the rare earths can be separated. Considerable additional development is needed to demonstrate a flowsheet for this process.

19.4 Cerium Exchange

In experiments to determine the solubility of fission product fluorides in various molten salt solvents, it has been observed[3] that the rare earth fluorides form solid solutions when jointly present in the solvent. This fact suggested the removal of the high cross section rare earth fluorides by precipitation in an exchange reaction with a less serious neutron poison. For example, cerium is a less serious neutron poison than most rare earths and will enter into reaction with samarium, a serious neutron poison, according to the reaction

$$CeF_3(ss) + SmF_3(d) \rightleftharpoons CeF_3(d) + SmF_3(ss)$$

where

ss = solid solution

d = dissolved in molten salt solvent.

The equilibrium in this reaction can be represented by a constant that is approximately equal to the ratio of the solubilities. From this the exchange can be predicted. Some typical results[3] for Ce-Sm exchange in a salt containing no thorium are given in Table 19.1. The exchange reaction was also demonstrated in salts containing thorium.

Table 19.1. Removal of Traces of SmF_3 by Addition of CeF_3 to $LiF-BeF_2-UF_4$ (62.8-36.4-0.8 mole %)

	Total Rare Earth Fluoride (wt%) in System (calc.)		Filtrate Temperature (°C)	Rare Earth Fluoride (wt%) in Filtrate		
					SmF_3	
	CeF_3	SmF_3		CeF_3 [a]	Observed	Predicted [b]
Before CeF_3 Addition	0	.0795	749		.0795	
First CeF_3 Addition	2.12	.0778	695	2.1 [c]	.0750	
	2.12	.0780	580	2.1 [c]	.0757	
	2.12	.0781	487	.9	.0542	.0471
Second CeF_3 Addition	10.1	.0731	736	8.34	.0662	.0662
	10.2	.0735	587	2.57	.0397	.0300
	10.7	.0757	492	.96	.0262	.0131

(a) Determined in a separate experiment; disregards effect of small amount of SmF_3 in system.

(b) Calculated from relationship $$N_{SmF_3}(d) = \left[\frac{S^{\circ}_{SmF_3}\, N_{SmF_3}(ss)}{S^{\circ}_{CeF_3}\, N_{CeF_3}(ss)}\right] N_{CeF_3}(d)$$

(c) Unsaturated

Exchange rate studies were also conducted employing a Ce-La exchange in a salt solution which was (72.0-15.5-11.5-1.0 mole %) $LiF.BeF_2$-ThF_4-UF_4. The tests were conducted at 580-600°C. Results indicated that the reaction was 60% complete in 5 minutes, 85% in 20 minutes and 95% in 60 minutes.

The Ce exchange process has been demonstrated on a laboratory scale, and at this point the work has been discontinued. Data are available to predict the degree of exchange in small-scale operations. No engineering development has been done.

19.5 Oxide Precipitation

Perhaps oxide precipitation should not be listed as a tail-end process for fluoride volatility because the treatment may be applied to a molten salt fuel even with uranium present. The process could also be used, however, for thorium recovery after uranium had been removed by fluoride volatility.

The use of certain oxides such as BeO, H_2O, and CaO has been tried on a laboratory scale for chemically processing molten fluoride salt fuels. Uranium dioxide is the most stable of the oxides of the fuel components and is precipitated first. The apparent order[3] of precipitation is

$$UO_2 \approx ZrO_2 > BeO > ThO_2 > Ce_2O_3 .$$

The order indicates that there is the possibility of separating fuel components from fission products; however, considerable laboratory and engineering development is needed for a satisfactory demonstration of the process.

Some typical results[3] using CaO are shown in Fig. 19.1.

19.6 Cold Zone Deposition

The possibility of removing slightly soluble contaminants by precipitation on a cold surface was investigated in the laboratory. The process can be visualized as consisting of a cold finger inserted in a reactor by-pass stream upon which soluble components deposit. The delicate heat balances required will make precise control of the process difficult; however, if the scheme is simple enough perhaps rough control will suffice. This process is not really a tail-end process for fluoride volatility because it is not necessary to fluorinate the salt before applying cold zone deposition.

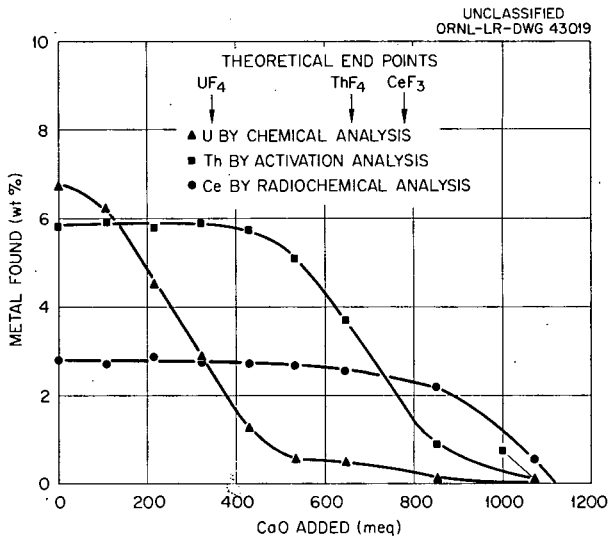

Fig. 19.1. Reaction of CaO with UF_4, ThF_4, and CeF_3 in LiF-NaF (60-40 mole %) at 750°C.

Watson[3] and co-workers were able to precipitate CeF_3 from a LiF_4BeF_2 (67-37 mole %) mixture. In a scouting experiment in which the melt contained about 5 wt % CeF_3, the solid frozen on the cold finger contained 20-40 wt % CeF_3.

19.7 Oxide Precipitation of Pa and U

Of considerable interest to a breeder reactor program is the removal of Pa^{233} from the fertile and fuel streams because this material is an appreciable neutron poison. Small-scale experiments[4] with $LiF-BeF_2-ThF_4$ (67-18-15 mole %) mixtures containing protactinium have demonstrated that protactinium oxide can be precipitated and that rather complete removal is possible (see Fig. 19.2). Precipitants employed have been BeO, ThO_2, and UO_2, materials which do not add foreign nuclides to the salt system. Comparable results have been obtained with all three compounds. The experiments indicated that protactinium is much more susceptible to precipitation as the oxide than uranium and that protactinium could be successfully precipitated from salt mixtures containing 1000-2000 ppm uranium.

Currently this experimental program is inactive. No engineering scale experiments have ever been tried.

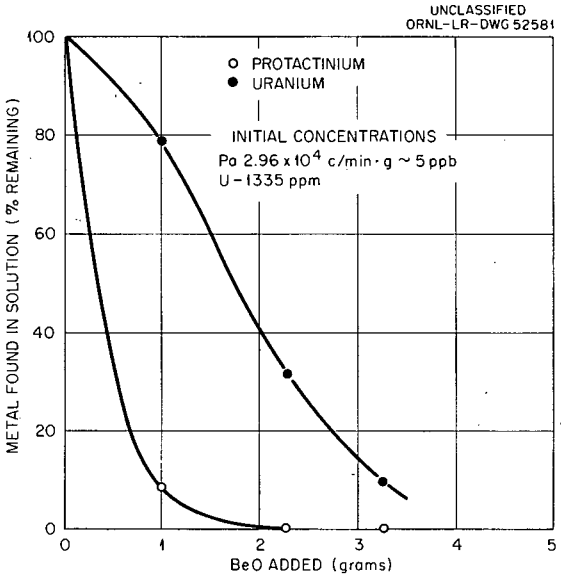

Fig. 19.2. Reaction of BeO with Protactinium and Uranium Dissolved in $LiF-BeF_2-ThF_4$ (67-18-15 mole %) at 650°C.

REFERENCES

1. D. O. Campbell, Molten Salt Reactor Fuel Processing Development---Program Summary, ORNL-3214 (in publication).

2. A. F. Clifford, H. C. Beachell and W. M. Jack, "The Hydrogen Fluoride Solvent System -- I. A Qualitative Survey of Acids," J. Inor. Nuc. Chem., 5, 57-70 (1957).

3. W. R. Grimes and H. F. McDuffie, Reactor Chemistry Division Annual Progress Report for Period Ending January 31, 1960, ORNL-2931 (Apr. 30, 1960).

4. W. R. Grimes, et al., Reactor Chemistry Division Annual Progress Report for Period Ending January 31, 1961, ORNL-3127 (May 3, 1961).

5. Brookhaven National Laboratory, Quarterly Progress Report for October 1 - December 31, 1952, BNL-225.

6. Brookhaven National Laboratory, Quarterly Progress Report For April 1 - August 15, 1953, BNL-249.

7. Brookhaven National Laboratory, Quarterly Progress Report for February 16 - May 15, 1954, BNL-297.

8. C. Williams, Progress Report of Nuclear Engineering Department for October 1- December 31, 1958, BNL-554.

9. C. Williams, Progress Report of Nuclear Engineering Department for January 1- April 30, 1959, BNL-571.

10. C. Williams, Progress Report of Nuclear Engineering Department for May 1 - August 31, 1959, BNL-583.

11. C. Williams, Progress Report of Nuclear Engineering Department for January 1- April 30, 1960, BNL-618.

PYROMETALLURGICAL PROCESSES

20.0 LIQUID METAL EXTRACTION

One phase of pyrometallurgical processing is the use of a liquid metal in an extraction process to separate fission products from thorium-uranium systems. The development has been confined mostly to metal and alloy fuels such as thorium metal, Th-U, and Th-U-Al alloys. In principle, liquid metal extraction employs a liquid metal (or alloy) which will extract one or more species from an irradiated molten thorium fuel thereby allowing a separation to be made. Primary requirements of such a system are (1) that the melting point of the metal extractant not be too high so that high temperature technology does not have to be extrapolated too much; and (2) that the boiling point of the extractant be low enough to permit separation and recovery by distillation.

Some metals that have been employed as extractants are lead, zinc, thallium, aluminum, magnesium, and silver-magnesium alloy. Aluminum does not have a low boiling point, but it does form intermetallic compounds with a number of metals thereby facilitating separation of components.

21.1 Th-U Alloy Extracted with Zn

The decontamination of thorium-uranium alloys using a liquid zinc extractant has been investigated on a laboratory scale at Atomics International;[1] additional work has been done at Argonne National Laboratory,[2,3] particularly with regard to determining solubilities.

Since only laboratory experiments have been reported, a definite flowsheet has not been established. However, the process would consist of dissolving thorium-uranium alloy in molten zinc at 800-900°C, at which temperatures the alloy is appreciably soluble. At lower temperatures (~ 500°C) the alloy solubility is considerably less, and if fission products proved to be more soluble at the lower temperature a separation could be made by filtration. At the lower temperature Th, U, and Zn form an intermetallic compound which precipitates and can be removed from the bulk of the melt which retains fission products. After filtration, zinc is removed from the intermetallic by distillation.

Process Performance. The results of two experiments[1] are given in Table 20.1, and it is indicated that appreciable quantities of most fission

products can be removed. The recovery of thorium and uranium is poor; however, the experiments were not designed for efficient metal recovery.

Process Limitations and Advantages. The process is not sufficiently defined or developed to permit thorough evaluation. The apparent advantage is that irradiated fuel could be processed almost immediately upon removal from the reactor because no radiation sensitive materials are used. On the other hand, the advantage of fast processing might be offset somewhat by loss of protactinium (see Table 20.1) which is extracted with fission products. A decay period might be necessary to prevent these losses. There is also a lack of technology for high temperature processing of radioactive materials.

Construction Materials. This phase of liquid metal processing using liquid zinc has not been investigated.

Status of Development. Only results of laboratory experiments have been reported, and it is not known if more advanced work has been done.

Table 20.1. Decontamination of Irradiated Th-U Alloy by Extraction with Liquid Zinc at 800°C

	Experiment No. 1	Experiment No. 2
	% Fission Product Removed	
Te	66	89
Zr	61	95
Sr	97	99
Cs	99	99
Ce	55	28
Rare Earths	87	50
Ru	56	58
	% Metal Recovery	
Th	21	30
U	38	16
Pa	34	53

20.2 Th-Al Alloy Extracted with Zn

Some experimental work has been done at Atomics International[4] on the use of zinc as an extractant for the recovery of thorium from a thorium-aluminum alloy. The process is based upon the fact that thorium forms a series of stable, intermetallic compounds with zinc which precipitate from a Th-Al-Zn system at a relatively low temperature (ca. 550°C). Filtration of the cooled melt could then be used to separate the intermetallic compound, Th_2Zn_{17}, from the bulk of the zinc and aluminum. Metallic thorium can then be recovered by heating the Th_2Zn_{17} to a high enough temperature to evaporate the zinc.

A limited amount of laboratory work has demonstrated that thorium zincide can be precipitated from a Th-Al alloy (25-75 wt %) using a volumetric ratio 2:1 for Zn:Al. The process is limited to zinc-rich systems; in aluminum-rich systems the precipitate is $ThAl_3$. Analysis of the thorium zincide indicated that the compound was contaminated with about 5% aluminum.

Only a limited amount of experimental work has been reported; an evaluation of the process requires more data.

20.3 Th-U-Al Alloy Extracted with Pb

The decontamination of Th-U-Al alloy by extraction with molten lead has been attempted[1] without much success. The laboratory procedures that were employed were to contact the metal alloy with lead at about 900°C at which temperature the mutual solubility of the phases is quite low. It was anticipated that lead would extract fission products from the alloy sufficiently to allow recycling the fuel.

The results of these experiments were not very encouraging as shown in Table 20.2.

Table 20.2. Fission Product Extraction from Th-U-Al Alloy by Molten Lead

Temperature (°C)	Percent Fission Product Extracted				
	Ce	Cs	Sr	Rare Earths	Ru
885	5.26	0.085	29.4	1.48	0.0229
905	5.57	0.91	74.5	9.7	0.0998

20.4 Th-U-Al Alloy Extracted with Thallium

In a series of laboratory experiments similar to those discussed in Section 20.3, samples of Th-U-Al alloy were contacted with molten thallium at temperatures in the range 915-935°C; the two phases are practically immiscible. The degree of fission product extraction was measured and found to be too low for serious consideration of thallium as an extractant.

The results[1] of two experiments are given in Table 20.3.

Table 20.3. Fission Product Extraction from Th-U-Al Alloy by Molten Thallium

Temperature (°C)	Percent Fission Product Extracted				
	Ce	Cs	Sr	Rare Earths	Ru
935	5.44	0.065	16.3	0.445	0.0281
915	5.02	0.10	9.0	0.99	0.0551

20.5 Th-U Alloy Dissolved in Mg

A method of processing thorium-uranium alloys being investigated at Atomics International[5] is that of partitioning thorium and uranium in a melt of magnesium metal. When the molten alloy is contacted with magnesium at temperatures in the range 700-850°C, the more soluble thorium is extracted by the magnesium causing uranium metal to precipitate. The melt may be decanted or filtered to recover uranium.

Uranium Recovery. The metallic uranium precipitate contains appreciable quantities of magnesium-thorium melt which is difficult to remove by customary liquid-solid separation techniques. Heating under vacuum at about 900°C will remove the bulk of the magnesium but not the thorium. Finally the uranium can be arc melted to a button to remove final traces of the volatile metal. Results have been reported[5] which indicate rather good recovery of uranium, and some selected values are given in Table 20.4. It will be noted that the Th:U ratio in the uranium product is about 1:1; whereas, this ratio in the original alloy was about 10:1.

Table 20.4. Separation of Uranium from Thorium by Liquid Magnesium Extraction

Type Experiment	Original Alloy Th(g)	Original Alloy U(g)	U Recovered in Concentrate (%)	Th:U Ratio in Concentrate
Filtration	25.1	2.49	89	1.9
Decantation	27.9	2.76	96	0.9
Filtration	43.8	4.14	70	1.0
Decantation	58.1	5.74	93	1.0
Decantation	48.6	4.80	100	0.7

Thorium Recovery. Thorium recovery from the filtrate is necessary for economical use of both thorium and magnesium. A promising method has been to react the melt with hydrogen gas at temperatures slightly above the melting point (650°C) of magnesium to form thorium hydride which is only slightly soluble in the melt. The filtered hydride and its residual magnesium are heated to about 800°C under vacuum to remove magnesium and to dehydride. Arc melting may then be used to form metallic thorium buttons.

The results[6] of several laboratory experiments are given in Table 20.5.

Construction Materials. Information and industrial experience with magnesium much above its melting point are meager and even more so for the binary Th-Mg system. A limited amount of evaluation has been conducted[5] to determine a suitable container material, but the reported results are inconclusive. Austenitic stainless steels appear to be reasonably satisfactory but melt contamination with iron and traces of nickel and chromium has been observed.

Process Limitations and Advantages. Among the advantages of magnesium extraction is the ability to process reactor fuel immediately upon discharge from the reactor because no radiation sensitive materials are used. Secondly, the fuel is not changed in chemical form being carried through the process as the metal; expensive refabrication costs are thereby avoided. A process limitation is the contamination of the uranium product with thorium; this perhaps is not serious if uranium is to be recycled to the reactor as a Th-U alloy. It might also be difficult to obtain high uranium recovery in such a high temperature operation.

Table 20.5. Separation of Thorium from Magnesium by Hydriding, Filtering and Dehydriding

Initial Alloy		Filtrate		Filtered Residue		% Th Re-Covered in Residue	wt % Th in Dehydrided Residue
wt(g)	wt % Th	wt(g)	wt % Th	wt(g)	wt % Th		
70.0	32	42.6	10.6	23.9	71	75.6	99.0
79.6	35.5	52.3	9.4	26.2	78	76.4	98.5
95.4	30.2	64.0	8.7	30.0	77	80.2	98.9
97.8	26.5	71.8	8.6	24.8	72	68.8	98.6
96.2	38.5	58.9	8.1	36.6	80	79.0	99.2
103.2	44.3	45.2	8.8	47.1	73	75.0	97.2

Status of Development. Laboratory development has been reported on the major step of the process using unirradiated materials. It has been stated[6] that experiments with irradiated samples are being conducted, but no results have been reported. The efficiency of magnesium extraction for decontaminating irradiated fuel cannot therefore be ascertained.

20.6 Th Recovery from Ag-Mg System

This system is a modification of the one discussed above in Section 20.5. Silver is added to the magnesium to lower the melting point of the system permitting operation at lower temperature. Also the solubility of thorium hydride is lower in the Ag-Mg system than in magnesium alone.

20.7 Th-U Alloy Processing in a Magnesium-Salt System

An integrated process that is being developed at Ames Laboratory[7] for reprecessing thorium-uranium fuel uses molten magnesium as an extractant for thorium similar to the process described in Section 20.5, but uranium and protactinium are recovered in a different manner. The process is depicted in Fig. 20.1.

Process Description. Irradiated thorium or thorium-uranium metal is dissolved in molten magnesium at 800-900°C to give a Th-Mg melt that is about 42 wt % Th. Finely divided uranium particles are insoluble and settle to the bottom of the vessel from which they are drawn off to a second vessel.

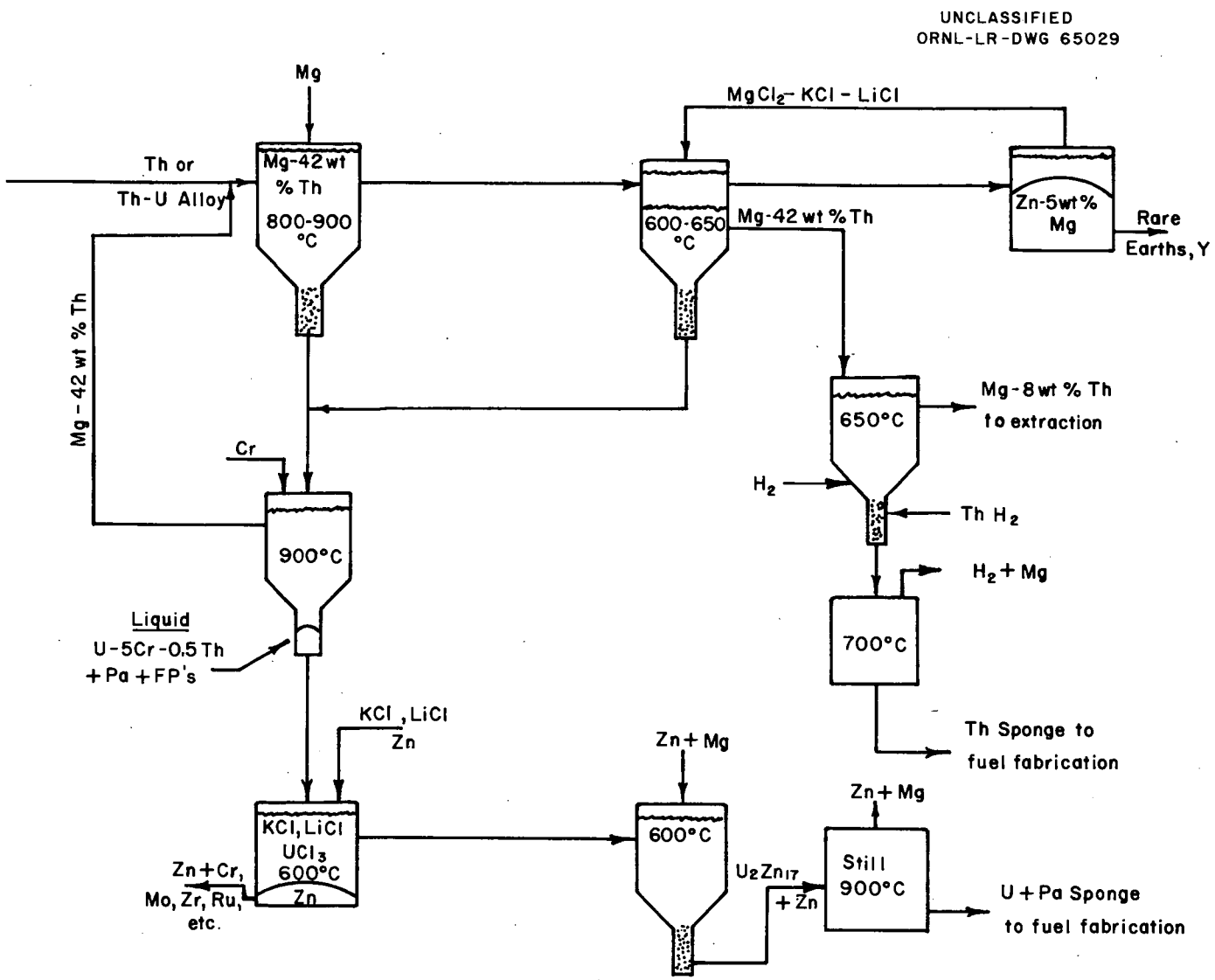

Fig. 20.1. Pyrometallurgical Processing of Th-U Fuel by Magnesium plus Fused Salt Extraction.

The Th-Mg layer is withdrawn and contacted with a molten salt solution consisting of $MgCl_2$-KCl-LiCl which decontaminates the thorium by extracting principally yttrium, alkali metals and rare earths. The two phases are separated and the salt phase is contacted with a Zn-Mg mixture to consolidate the fission products; the salt is recycled. The Th-Mg phase is contacted with hydrogen at 650°C to precipitate thorium hydride which is removed from the melt and reduced by heating to about 700°C under vacuum. Magnesium which accompanies the hydride is vaporized in the process, and the product is a thorium sponge. Since the hydride is soluble to approximately 8 wt % Th in magnesium, the liquid phase from the hydriding step must be recycled.

The uranium-rich phase from the initial dissolution, accompanied by some Th-Mg eutectic, is contacted at 900°C with chromium metal to form a second liquid phase that contains the uranium, protactinium and fission products. This phase has the approximate composition U-Cr-Th (94.5 - 5 - 0.5 wt %). The magnesium-rich upper layer is recycled to the initial dissolution step.

After the U-Cr-Th layer has been separated from the Th-Mg eutectic, it is contacted with a molten chloride salt containing KCl-LiCl-Zn. Uranium trichloride becomes a component of the salt. Chromium and certain fission products accumulate in the molten zinc phase. The salt, containing uranium, is reacted with molten Zn-Mg to accumulate the uranium as uranium zincide. It is thought that protactinium behaves similarly to the uranium. The zincide is heated to 900°C to distill zinc and magnesium leaving a metal sponge of uranium and protactinium.

Status of Development. The development of this process has been directed toward gathering basic equilibrium and solubility data for the various operations. The steps have not been demonstrated in other than laboratory equipment.

REFERENCES

1. R. E. Johnson and J. D. Chilton, Reprocessing of Thorium-Uranium Fuels by Liquid Metal Extraction, NAA-SR-5506 (Dec. 1, 1960).

2. S. Lawroski, Argonne National Laboratory Chemical Engineering Division Summary Report October, November, December 1959, ANL-6101 (Feb. 1960).

3. S. Lawroski, Argonne National Laboratory Chemical Engineering Division Summary Report October, November, December 1958, ANL-5959 (Mar. 1959).

4. D. O. Raleigh, Pyrometallurgical Separation of Thorium from Th-Al Alloys, NAA-SR-Memo-5869 (Nov. 14, 1960).

5. F. W. Dodge, J. D. Chilton, and L. A. Hanson, Separation of Uranium from Thorium by Liquid Metal Extraction - Interim Report, NAA-SR-4942 (May 1, 1960).

6. Atomics International, Annual Technical Progress Report - AEC Unclassified Programs, NAA-SR-5350 (Aug. 1, 1960).

7. P. Chiotti, P. F. Woerner and S. J. S. Parry, Pyrometallurgical Reprocessing of Thorium-Uranium Fuel, IS-302 (Aug. 17, 1961).

21.0 DRIP MELTING

A pyrometallurgical processing method for thorium-uranium alloy fuels that has been studied at Atomics International[1] is drip melting. The process is based upon property that a number of fission products have vapor pressures at the melting point of the fuel that are appreciably larger than that of either thorium or uranium. A few typical values[1] are given in Table 21.1.

Table 21.1. Vapor Pressures of Representative Elements at 2000 K

Element	Vapor Pressure (atm)
Cs	> 1
Te	> 1
Sr	> 1
Ce	4×10^{-2}
La	10^{-3}
U	10^{-6}
Zr	$< 10^{-6}$
Th	$< 10^{-6}$
Pa	$< 10^{-6}$
Ru	$< 10^{-6}$

The process is very simply conducted since only two principal operations are involved. The metallic fuel element is suspended vertically in an evacuated chamber in such a manner that only the lower end is in the heating zone. An induction coil placed around the evacuated chamber at this point is used to heat the fuel to its melting point. Power to the coil is controlled so that the element slowly melts at the lower end. It is not desirable to have a rapid melting rate because time must be allowed for the volatile atoms in the interior to diffuse to the surface and vaporize.

Molten metal drips into a receiver from which it is recovered for refabrication which is the second operation. Since drip melting does not produce a completely decontaminated fuel, refabrication must be done remotely.

21.1 Process Performance

Experiments were carried out with irradiated Th-U (91-9 wt %) alloy which indicated rather good decontamination. As indicated in Table 21.2, the longer heating times were instrumental in giving larger decontamination.

Table 21.2. Decontamination of Irradiated Th-U Alloy by Drip Melting

Heating Time (min)	Frequency (kc)	Percent Decontamination			
		Sr	Cs	Rare Earths	Ce
< 1.0	325	60	56	9	0
1.0	325	59	50	17	3
1.5	325	45	31	11	3
240	325	96	88	64	27
300	325	92	88	55	25
1.5	420	42	14	20	17
7.0	420	45	79	33	3

No volatilization of thorium or uranium was apparent in the experiments, indicating that metal recovery should be almost quantitative.

21.2 Process Limitations and Advantages

As is the case with all pyrometallurgical processes the operations can be carried out on freshly discharged reactor fuel because no radiation sensitive chemicals are involved, and, in addition, the chemical state of the fuel is not altered. Drip melting, however, does not give sufficient decontamination to allow direct fuel handling; consequently, refabrication may become complicated and costly. Also there is no means of partitioning thorium and uranium should this be desirable. It might be extremely difficult to find a container material

to receive the molten fuel; i.e., one that will not react with and contaminate the fuel. On the other hand, fuel recovery should be extremely high.

21.3 Status of Development

Small-scale laboratory experiments have been conducted using irradiated materials, and remote handling has been demonstrated. Refabrication of the drip melted fuel is an area that requires considerable development.

REFERENCES

1. F. W. Dodge, E. W. Murbach, and L. A. Hanson, Low Decontamination Reprocessing of Thorium-Uranium Alloys by Induction Drip Melting, NAA-SR-3219 (Dec. 15, 1958).

22.0 ELECTROREFINING

Electrorefining is a pyrometallurgical process that may be employed where large decontamination factors are not required. Electrolysis is a molten salt bath as a method of producing pure thorium has been known for some time, and more recently the method has been applied to irradiated thorium-uranium alloy as a processing method.[1,2]

22.1 Process Description

Electrorefining is based on the difference in decomposition potential between thorium, uranium, and a number of fission products to provide a separation. As Hansen and co-workers[2] point out, the fission products fall into three general classes: (1) The more active metals which form salts with a higher decomposition voltage than the corresponding thorium salt. These elements will dissolve in the anode and not deposit in the cathode. Cesium and stronium fall into this group. (2) The less active metals which form salts with a lower decomposition voltage than the corresponding thorium salt. These elements will not dissolve in the bath but will form an anode sludge; proper cell design can prevent these elements from reaching the cathode. Examples are ruthenium and molybdenum. (3) The group of metals which form salts having decomposition voltages very near that of the corresponding thorium salt. These will dissolve in the bath, buildup in the anode compartment and eventually deposit at the cathode. Therefore, appreciable separation from this type of element may be difficult; uranium and zirconium may act in this manner.

Electrorefining is carried out in a cell in which thorium or thorium-uranium alloy is made the anode, which in turn is contained in a molten salt bath, e.g., 60-40 wt % KCl-NaCl. The cathode compartment is also contained in the molten salt bath and consists of zinc metal in an alumina crucible. In use the entire cell is encased by a furnace to keep the salt and zinc molten. During electrolysis, thorium dissolves at the anode and migrates to the cathode where it forms an alloy with zinc. The low-melting Th-Zn alloy can be easily removed from the cathode compartment, giving a product that is relatively uncontaminated by salt. Thorium is then recovered from the alloy by distilling off the zinc.

22.2 Process Performance

Electrorefining is capable of giving appreciable decontamination from fission products as the values of Table 22.1 show. In these experiments, however, the recovery of thorium and uranium was not very high. Likewise the current efficiency was quite low.

22.3 Process Limitations and Advantages

The reported results[2] of initial experiments indicate that considerable improvement in process efficiency is necessary if electrorefining is to be considered seriously. Perhaps this can be done with improved cell design. The process is limited in being unable to partition thorium and uranium and would therefore be of use only on converter reactor fuel where complete recycle is a characteristic. Remote fabrication of fuel would be required because of the limited decontamination that the process offers. However, perhaps this should not be considered as a limitation because heavy isotope buildup in recycled fuel would probably make remote fabrication necessary anyway.

The main advantage is that "green" fuel can be processed without a change in chemical state. No radiation sensitive chemicals are used.

22.4 Status of Development

The work that has been reported in the literature has been on a laboratory scale. However, there is reason to believe that more advanced work has been done.

Table 22.1. Decontamination of Th-U (94.6 - 5.4 wt %) Alloy by Electrorefining Using a Molten Zinc Cathode

Time (hrs)	8.5	5.5	9.0	16.5	3.0
Current Efficiency (%)	6.0	11.0	2.5	4.0	10.0
	Percent Removed				
Total Activity	86	85	8.0	90	-
Ruthenium	98	99+	73	99+	91
Rare Earths + Yttrium	31	64	95	26	84
Zirconium	94	79	80	97	58
Strontium	86	70	(gain)	99+	99+
Cerium	82	45	(gain)	55	-
Cesium	95	98	99+	88	99+
Protactinium	76	57	87	99+	-
	Product Recovery				
Initial Th-U Sample (gm)	~ 15	~ 15	~ 15	~ 15	~ 15
Th in Cathode (gm)	2.26	2.70	0.93	1.42	1.27
U in Cathode (gm)	0.12	0.37	1.56	-	0.36

REFERENCES

1. W. N. Hansen, Decontamination of Thorium by Electrolysis - A Theoretical Discussion, NAA-SR-4885 (June 15, 1960).

2. W. N. Hansen, W. L. Long, and E. W. Murbach, Electrorefining of Irradiated Thorium-Uranium Alloy, NAA-SR-4660 (Jan. 15, 1960).

MISCELLANDOUS FUELS
and
PROCESSING METHODS

23.0 FISSION PRODUCT ELUTION FROM ThO_2-UO_3 SLURRY FUELS

23.1 Process Description

A rather new approach to chemical processing of thorium-uranium oxide slurries contained in aqueous solution (D_2O or H_2O) has been suggested by Gardner.[1] The process involves eluting fission products from the surface of the oxide particles by a dilute nitric acid wash.

The process was suggested by prior work of the same author[2] on the behavior of fission fragments in a Th-U-O aqueous slurry medium. The calculations, which were substantiated by experimental data, indicated that in a reactor system employing micron-size particles (3-20μ) in low volumetric concentration (~ 3 vol %) most of the fission fragments would escape the particle and reach the end of their range in the aqueous medium. Later the fragment would be adsorbed on the surface of the ThO_2 particle.

It was observed that most adsorbed fission products could be eluted from the particle surfaces by boiling the slurry in dilute nitric acid. However, rare earths and acid insoluble metals such as cerium and zirconium were resistive to elution and could not be removed. It was found that if the slurry were treated before irradiation with a small amount of $Al(OH)_3$ or $Mg(OH)_2$, the altered surfaces would still adsorb fission products but elution was now much easier even for the rare earths and acid insoluble metals.

In a continuously operating system the process is visualized as consisting of removing a side stream of slurry from the reactor, dewatering the slurry and treating it with boiling dilute HNO_3 (~ 2 M) for a period of 2-5 hours. Fission products would be dissolved without noticeable attack on the slurry. The slurry would be returned to the reactor.

23.2 Process Performance

Up to 75% of adsorbed cerium, a typical rare earth used in the laboratory tests, was removed from the particle surfaces in a hot dilute HNO_3 wash; up to 40% was removed in a cold dilute HNO_3 wash. Cerium recovery from slurries that had been coated with $Al(OH)_3$ or $Mg(OH)_2$ was as high as 95%. Thorium and uranium losses were not reported, but are expected to be negligible.

23.3 Process Limitations and Advantages

The outstanding advantage of the elution process is the elimination of the need to destroy the integrity of the fuel for decontamination purposes.

Consequently the difficult chemical and physical fuel reconstitution operations are obviated. Secondly, the elution could be carried out on "green" material because radiation damage to process chemicals is unimportant; inventories held up in decay cooling are thereby eliminated.

As the volumetric concentration of the slurry and the size of the particles increases the degree of decontamination decreases. This might be expected because more fission fragments can get trapped in the interior of the particles where they are not reached by the acid wash.

23.4 Status of Development

This processing method is in the laboratory stage of development.

REFERENCES

1. D. G. Gardner, "A Suggested Method for the Chemical Reprocessing and Purification of Th-U-O Slurry-Type Reactor Fuels," Nucl. Sci. Eng., 10, 228-234 (1961).

2. D. G. Gardner, "Fission Fragment Impact Trapping by ThO_2 Slurry Particles," Nuc. Sci. Eng., 6, 487-492 (1959).

24.0 THORIUM FUELS

24.1 Fuels Containing Thorium Oxide as a Dispersion in a Liquid

ThO_2-H_2O Slurry. Thorium dioxide-water slurries have been proposed as reactor fuels and fertile material in recent years in connection with aqueous homogeneous breeder reactors. The slurry offers the advantage of high metal concentration in a system that has physical properties nearly like a fluid. Chemical processing of ThO_2-H_2O systems is well developed and defined in the Thorex process described in Section 1.0. The usual Thorex dissolution treatment prepares the fuel for aqueous solvent extraction in which decontaminated thorium and uranium are obtained as products.

ThO_2-D_2O Slurry. The procedure for processing a ThO_2-D_2O slurry is entirely analogous to that of a ThO_2-H_2O slurry discussed above with one additional step. Valuable heavy water must first be recovered from the slurry as the first step in the dissolution and feed preparation operation of Thorex. Heavy water may be recovered by customary solid-liquid separation techniques such as filtration, evaporation or centrifugation followed by drying.

After heavy water has been almost quantitatively recovered, thorium oxide is dissolved in aqueous nitrate solution and processed by Thorex to recover decontaminated thorium and uranium (see Section 1.0).

ThO_2-Bi Slurry. This fuel was proposed for the Liquid Metal Fuel Reactor blanket system. The fuel is first subjected to a special head-end treatment to separate thorium oxide and bismuth as described in Section 16.0 after which the oxide is processed by Thorex for thorium and uranium recovery. Bismuth is also recovered and reused.

24.2 ThO_2-UO_2 Pellets Clad with Stainless Steel

This fuel is the one to be used in the Consolidated Edison Thorium Reactor (CETR). Fuel pellets are sintered, cylindrical ThO_2-UO_2 shapes[1] about 2.1 cm long by 0.66 cm diameter. The pellets are clad with a 20-mil-thick coating of type 304 stainless steel. The UO_2 content is from 2-8 wt %.

CETR fuel is processed by Thorex solvent extraction for recovery and decontamination of thorium and uranium after a head-end treatment to prepare the fuel for Thorex. There are two head-end processes suitable for this feed

preparation: Darex-Thorex and Sulfex-Thorex. These are discussed in Sections 2.0 and 3.0, respectively. The first of these is a two-step dissolution procedure in which the stainless steel clad is removed by dilute aqua regia followed by nitric acid dissolution of the mixed oxide pellets. In the Sulfex treatment, decladding is accomplished in 6 M H_2SO_4 followed by dissolution of the mixed oxide core in concentrated nitric acid. The product of the core dissolution in each case can be adjusted to the proper concentration for feed to the Thorex process.

24.3 Thorium Metal Fuels

Th-U Alloy. Chemical processing of this fuel by aqueous solvent extraction is the well established Thorex process. The fuel is easily dissolved in concentrated nitric acid catalyzed by a small concentration of fluoride ion. Stainless steel is a suitable material of construction. The Thorex process is discussed in Section 1.0.

Th-U-Al Alloy. A fuel of this type would be processed by Thorex as described in Section 1.0.

ThO_2-UO_2 Dispersions in Thorium. No references were found to a fuel of this type being considered for a nuclear reactor. However, metallurgically speaking the fuel could probably be fabricated. Chemical processing could be accomplished by well established Thorex procedures (Section 1.0) for recovery of decontaminated thorium and uranium.

ThC_2-UC_2 Dispersions in Thorium. No references were found to a fuel of this type being considered for a nuclear reactor although such a fuel could probably be fabricated. No chemical processing information is available; however, the fuel would probably dissolve in concentrated nitric acid so that further recovery of decontaminated thorium and uranium could be accomplished by the Thorex process (Section 1.0).

24.4 Niobium-Clad Fuel

The use of niobium as a cladding material for reactor fuels is probable because of the favorable physical, chemical and nuclear properties of the metal.[2] Although no thorium fuels of this type are extant, preliminary laboratory tests have been made to determine a suitable method for dissolving niobium metal to prepare solvent extraction feed.[3] Possible reagents for

dissolution in aqueous media are boiling H_2SO_4, KOH and $HF-HNO_3$; anydrous media are Cl_2, HCl and HF.

The best dissolution rates were obtained with $HF-HNO_3$ solutions for which rates of 35 mg/cm^2 min and 5 mg/cm^2 min were obtained with 9 M HF-3 M HNO_3 and 6 M HF - 1 M HNO_3, respectively. Anhydrous Cl_2 was the best gaseous reagent giving reaction rates of 12 and 28 mg/cm^2 min at 300 and 360°C.

24.5 Niobium Carbide Clad Fuel

In anticipation of the use of NbC as a cladding material for an as yet unspecified reactor fuel, Oak Ridge National Laboratory has initiated scouting experiments into the dissolution of the clad.[4]

Niobium carbide was virtually unattacked by boiling solutions of hydrofluoric acid, nitric acid and sodium hydroxide in concentrations up to 10 M. However, dissolution was achieved in 1 M HNO_3-HF solutions, where the initial rate of dissolution increased from 0.002 to 20.3 mg/cm^2 min as the HF concentration was increased from 0.1 to 10 M.

This dissolution procedure leads to further processing by Thorex solvent extraction as discussed in Section 1.0. The HNO_3-HF solution, especially at higher HNO_3 concentrations, will dissolve most thorium compounds and thorium metal as well as uranium.

24.6 BeO Clad ThO_2-UO_2

Aqueous Processing. Fuels such as beryllium oxide-clad uranium dioxide have been considered for gas-cooled reactors such as the GCRE and MGCR. Such a fuel, even with a mixed oxide ThO_2-UO_2 core, could be processed by Thorex solvent extraction if a suitable head-end process were developed (see Section 13.0).

Fluoride Volatility Processing. Since beryllium fluoride is soluble in molten fluoride salt mixtures such as $LiF-BeF_2-UF_4-ThF_4$, fluoride volatility offers an attractive processing method for recovering decontaminated uranium. However, no process has been developed for recovering decontaminated thorium. Cathers[5] conducted some experiments aimed at dissolving sintered BeO at 600°C in a molten salt mixture that was 49-40-11 mole % $NaF-LiF-BeF_2$ by bubbling HF through the salt. The average rate of penetration of the BeO was 5 mils/hour.

These preliminary experiments indicate that BeO clad-UO_2-ThO_2 fuels can be processed by fluoride volatility since the volatilization of UF_6 from

molten salt has been demonstrated. However, no satisfactory method has been developed for thorium recovery.

24.7 Beryllium-Clad ThO_2-UO_2

Aqueous Processing. Work has only recently been initiated on a process to treat beryllium-clad oxide fuels.[6] To this date development has been confined to methods of dissolving beryllium, and it appears that the metal can be dissolved readily in boiling sulfuric acid, dilute nitric acid containing traces of fluoride ion, and sodium hydroxide. Laboratory dissolution rates are given in Table 24.1.[5]

Table 24.1. Initial Rates of Dissolution of Beryllium Metal in Various Boiling Reagents

Reagent	Initial (10-minute) Dissolution Rate, mg/cm^2 min
4 M HNO_3	0.02
15.8 M HNO_3	0.04
4 M HNO_3 - 0.05 M NaF	8
4 M HNO_3 - 0.1 M NaF	11
4 M H_2SO_4	63
6 M NaOH	2

Although these experiments were concerned only with the dissolution of beryllium metal such as would be required for the removal of a beryllium clad, it appears that there would be no difficulty in dissolving completely a fuel that is Be-clad ThO_2-UO_2. The established procedure for dissolving a mixed oxide core is to use nitric acid containing a little fluoride. Suitable feed for solvent extraction by Thorex could then be prepared by adding aluminum nitrate to the dissolver solution and evaporating to the required acid deficiency as discussed in Section 1.1.

An inherent disadvantage to this method of processing Be-clad ThO_2-UO_2 fuel is that all the beryllium must pass through the solvent extraction plant thereby creating large volumes of aqueous waste. The reagents listed in Table 24.1 cannot be used to selectively remove the Be clad without excessive loss of uranium and thorium from the oxide core.

Ni-o-nel should be suitable as a material of construction for the dissolver.

Fluoride Volatility Processing. Although no references were found to attempts to process Be-clad ThO_2-UO_2 fuel by fluoride volatility, such a scheme might be feasible. For example, if the Be clad could be dissolved in a LiF-BeF_2 molten salt mixture, uranium could be removed as UF_6 by hydrofluorination followed by fluorination. The process would not recover the thorium.

24.8 $ThBe_{13}$-UBe_{13}

Only a few scouting experiments have been made on thorium-uranium beryllide fuel directed toward the preparation of aqueous solutions for solvent extraction.[6] A composite of UBe_{13} and $ThBe_{13}$ dissolved readily in 4 M HNO_3 - 0.05 M NaF. Uranium beryllide alone dissolved rapidly in boiling 4 M H_2SO_4 and 4 M HNO_3-0.05 M NaF; thorium beryllide dissolved rapidly in 4 M HNO_3 but only slowly in 4 M H_2SO_4.

Dissolution of the mixed beryllide fuel in molten fluoride in preparation for fluoride volatility processing apparently has not been attempted.

24.9 SiC-Coated Graphite Containing ThO_2-UO_2

Laboratory results have been obtained[8] for the dissolution of this fuel by a grind-leach procedure (Section 7.0). The SiC coating is cracked in the grinding operation to allow the dissolvent to contact the graphite core. The ground mixture is contacted with boiling 90% HNO_3 which disintegrates the graphite core and dissolves the ThO_2-UO_2 mixture.

Development in the laboratory has only recently been initiated, and some initial results indicate that uranium recoveries are relatively low. For example, after 3.7 hours exposure to the boiling HNO_3 leach solution, uranium losses to the graphite residue were about 6%. Processing methods for this fuel are directed toward a suitable head-end treatment for uranium and thorium recovery by aqueous solvent extraction (see Thorex Process, Section 1.0).

24.10 Al_2O_3-ThO_2-UO_2

A fuel consisting of UO_2 particles dispersed in an alumina matrix has been mentioned as a possible fuel for a gas-cooled reactor such as the MGCR. Development of a process to prepare such a fuel for aqueous solvent extraction has been initiated at ORNL.[3,6] The current work has not included thorium or thorium compounds as a component of the fuel; however, mixed ThO_2-UO_2 readily dissolves in the same reagent.

The current research is directed toward a means of leaching UO_2 from the Al_2O_3 matrix using boiling nitric acid. Two types of UO_2 dispersions have been considered, one in which the UO_2 particles were about 10μ and the other in which the particles were about 150μ. As shown in Table 24.2,[6] uranium recoveries are not very good except at low Al_2O_3 content in the fuel. Experiments in which 0.2 M HF had been added to the 10 M HNO_3 did not significantly increase uranium recovery.

Table 24.2. Uranium Recoveries from Al_2O_3-UO_2 Fuel Pellets by Leaching with Boiling 10 M HNO_3

	Al_2O_3 in Pellet (%)	U Loss to Residue (%)
~ 10 μ UO_2 dispersion in pellet	3.7	0.002
"	13.7	3.3
"	28.4	23.0
"	61.1	88.4
~ 150 μ UO_2 dispersion in pellet	4.4	0.05
"	11.2	0.15
"	25.9	3.28
"	70.1	48.3

24.11 Thorium Carbide Fuels

ThC_2 Clad with Pyrolytic Carbon. This fuel is very intractable to attack by chemical solvents because of the pyrolytic carbon coating. Laboratory experiments have been conducted by each of the three methods (grind-leach, 90% HNO_3 dissolution and combustion-dissolution) outlined above in Sections 7.0, 8.0, and 9.0 to prepare this fuel for solvent extraction. The only completely successful method has been combustion-dissolution. Attempts to apply the fuming HNO_3 process resulted in only 6% and 4% recoveries for uranium and thorium, respectively.[9]

The grind-leach process may be applied to these carbon-coated fuels if the crushed particles are reduced to a small enough size so that the pyrolytic carbon coating on each particle is cracked. Since individual fuel particles in some reactor fuels may be in the micron range, extensive grinding is required. Hannaford[10] has made a preliminary cost estimate on a plant for processing 100 kg/day of pyrolytic carbon-coated ThC_2-UC_2 fuel for a pebble bed reactor and arrived at a processing cost of $30.39 per kg of fuel. This estimate was an extension of the estimate of Table 7.1 for the process outlined in Fig. 7.1. It was assumed that the fuel would have to be reduced to -100μ diameter.

ThC_2 Clad with Si-SiC. A proposed fuel for the pebble bed reactor is a 1-1/2 in. diameter sphere coated with 30 mils of Si-SiC (see Fig. 7.1). Individual fuel particles inside the ball are not coated, only the spherical pebble. Since the clad is rather impervious to attack by HNO_3, the sphere has to be cracked to permit penetration. Fuming (90%) HNO_3 readily attacks the crushed elements leaching thorium and uranium. Metal recoveries[11] are greater than 99%. After leaching, the nitrate product solution would be clarified, adjusted in concentration and processed by solvent extraction for Th and U separation and decontamination. Fuel reconstitution would be accomplished by metallurgical and ceramic operations.

Preliminary cost data have been prepared by Hannaford[10] for processing 100 kg/day of this fuel. These data have been given in Table 7.1.

ThC_2 Clad with Stainless Steel. No processing development has been undertaken on this type fuel. However, processing would probably consist of cladding removal by a Darex or Sulfex process followed by dissolution of the ThC_2-UC_2 interior with 90% HNO_3.

ThC_2 Dispersions in Graphite. Interest in thorium-uranium carbide dispersions in graphite as reactor fuels stems from studies on gas-cooled reactor concepts such as the Pebble Bed[12] and Turret[13] reactors. These ceramic fuels cannot be processed directly by solvent extraction (Thorex) for decontaminated uranium and thorium recovery. An initial head-end treatment has to be applied to the fuel to separate graphite from the other constituents and prepare the metallic elements for solvent extraction. This head-end process is a combination of mechanical and chemical operations which has been developed at ORNL by Bradley and Ferris.[14] After the head-end treatment, conventional solvent extraction procedures (see Section 1.0) are followed to recover thorium and uranium separated from fission products. After solvent extraction, the carbide fuel is reconstituted by metallurgical operations for recycle to the reactor.

The head-end treatment is basically concerned with the dissolution of the metals in concentrated HNO_3. However, alternate steps in the process make it advantageous to identify three distinct processes as (1) grind-leach; (2) fuming HNO_3 dissolution; and (3) combustion-dissolution.

24.12 Fuels Containing Thorium Fluoride

This section comments on thorium fluoride fuels that have either been considered as possible reactor fuels or have possibilities as such because of favorable physical properties.

$LiF-ThF_4$. A $LiF-ThF_4$ binary salt having a basic composition 75-25 mole % might be of interest in a molten salt reactor. The liquidus temperature, ca. 570°C, is higher than that of some ternary $LiF-BeF_2-ThF_4$ compositions, but it is perhaps within the range of consideration for advanced systems.

There is no information to suggest that chemical processing of this system would be different from the fluoride volatility methods discussed in Section 15.0.

$NaF-ThF_4$. The liquidus temperature of this salt at about 78-22 mole % $NaF-ThF_4$ is approximately 630°C, so this composition might be of interest in higher temperature reactors. In the light of current information, chemical processing would be as described in Section 15.0.

$NaF-ZrF_4-ThF_4$. In order to get appreciable thorium, e.g., 10 mole % or more, into this system, the liquidus temperature must be 600°C or higher. Hence the use of this system is limited to high temperature reactors.

Nevertheless, the ternary system could be processed by fluoride volatility as described in Section 15.0. It is not known how the Zr will behave in some of the more incompletely developed tail-end processes discussed in Section 17.0, e.g., the aqueous NH_4F process or SbF_5-HF process. In one of the oxide precipitation processes, ZrO_2 would probably precipitate as readily as U and Pa oxides.

LiF-ThF_4-UF_4. At 75 mole % LiF with UF_4 content in the range 1-5 mole %, liquidus temperatures are in the range 560-575°C; therefore this system might be of interest in a thorium reactor. Uranium could be recovered by fluoride volatility as described in Section 15.0. There is no developed process for decontaminating the remaining salt, and perhaps the Li and Th would have to be discarded. The SbF_5-HF process (see Section 17.3) might be developed to decontaminate the uranium-free salt.

ThF_4 Pellets or Powder. There have been laboratory investigations into methods of processing thorium fluoride solids for removal of uranium and protactinium. These methods have been concerned mostly with blanket materials to improve breeding performance.

Workers at Brookhaven National Laboratory[15] contacted irradiated ThF_4 powder with NO_2-HF solution to determine the extent of protactinium extraction. The sample was treated with the NO_2-HF solution to complex protactinium rendering it extractable in subsequent treatments with nitric acid and water. Some laboratory results are presented in Table 24.3.

Table 24.3. Effect of 25 Mole % NO_2-75 mole % HF Treatment on Pa^{233} Extraction from Irradiated ThF_4

	% Pa Extracted		
Sample Treatment	H_2O	HNO_3	Total
NO_2-HF after irradiation	22	28	50
NO_2-HF before irradiation	8	3	11
No treatment with NO_2-HF	0	18	18

Gas-Solid Reaction to Vaporize UF_6. In conjunction with the development of the Liquid Metal Fuel Reactor at Brookhaven National Laboratory, an experimental program was instituted to study uranium and protactinium removal from irradiated ThF_4 solids by a gas-solid reaction.[15-22]

The initial phase of this work was directed toward a method of continuously removing UF_6 - and perhaps PaF_5 - from a ThF_4 pellet or powder blanket *in situ* by passing F_2 gas through the blanket. In later changes in the process,[22] the blanket was made a D_2O-ThF_4 slurry, and a side stream was withdrawn for processing. In this scheme, the ThF_4 powder was separated by a cyclone from the D_2O, dried and routed to the gas-solid reaction chamber. Thorium fluoride powder was picked up by a stream of $D_2 + F_2$ gas (containing excess F_2) which was burned in a torch producing a high temperature zone for promotion of the $UF_4 \rightarrow UF_6$ reaction. It was expected that Pa would also be vaporized as PaF_5 in the torch. Protactinium and uranium would then be separated in a cold trap ($< 400^{\circ}F$) which would retain PaF_5 but not UF_6.

Neither of these two volatilization methods was ever developed to the point where consistent, reproducible results were obtained. There was evidence that PaF_5 and UF_6 were being volatilized from the ThF_4 solids, but the exact nature of the reactions and the rate controlling steps were never completely analyzed. The work was abandoned because of the difficulty encountered in making satisfactory ThF_4 pellets and powder and because of lessened emphasis on the development of a thorium breeder blanket.

Liquid-Solid Reaction to Extract Pa. A process for extracting Pa from irradiated ThF_4 solids using NO_2-HF and NO_2-BrF_3-HF solutions has been investigated at Brookhaven National Laboratory.[15,19-21] In general, the NO_2-HF concentrations are in the range 16-84 mole % to 27-73 mole %. It appears that these solutions complex Pa allowing it to be extracted in subsequent treatments with H_2O or HNO_3.

This process is in the laboratory stage of development and cannot yet be fully appraised.

ThF_4 Dispersions. This topic is intended to include ThF_4 dispersions in other matrices such as graphite, beryllium, aluminum or other solids and dispersions in water, liquid metals or other liquids. Other than the application of ThF_4-D_2O slurry discussed above, there have apparently been no other considerations of a ThF_4 dispersion as a converter or breeder reactor material.

REFERENCES

1. L. M. Ferris and A. H. Kibbey, Sulfex-Thorex and Darex-Thorex Process for the Dissolution of Consolidated Edison Power Reactor Fuel: Laboratory Development, ORNL-2934 (Oct. 26, 1960).

2. J. A. DeMastry and R. F. Dickerson, "Niobium - Promising High-Temperature Reactor-Core Material," Nucleonics, 18, No. 9, 87 (1960).

3. F. L. Culler, Chemical Technology Division Annual Progress Report for Period Ending May 31, 1961, ORNL-3153 (Sept. 14, 1961).

4. F. L. Culler, Jr., Chemical Technology Division Monthly Report for August 1961, ORNL CF-61-8-95 (Aug. 31, 1961).

5. K. S. Warren and L. M. Ferris, Processing of Beryllium Oxide Fuels, ORNL CF-61-2-3 (Feb. 13, 1961).

6. K. S. Warren, L. M. Ferris, and Arlene H. Kibbey, Dissolution of BeO- and Al_2O_3-Base Reactor Fuel Elements. Part I, ORNL-3220 (in press).

7. R. E. Blanco, L. M. Ferris, and D. E. Ferguson, Aqueous Processing of Thorium Fuels, ORNL CF-61-6-14 (June 22, 1961).

8. F. L. Culler, Jr., Chemical Technology Division Monthly Report for September 1961, ORNL TM-18, Sept. 29, 1961.

9. Oak Ridge National Laboratory, Oak Ridge National Laboratory Status and Progress Report, June 1961, ORNL-3156 (July 11, 1961).

10. M. E. Whatley, et al., Chemical Technology Division Unit Operations Section Monthly Progress Report, June 1961, ORNL CF-61-6-70.

11. Mildred J. Bradley, Oak Ridge National Laboratory, personal communication.

12. Sanderson and Porter Company, Pebble Bed Reactor Program. Progress Report for June 1, 1958 to May 31, 1959, NYO-2373.

13. R. P. Hammond and J. P. Cody, eds., A Preliminary Study of the Turret Experiment. An Operating Test of Unclad Fuel at High Temperature, LA-2303 (Mar. 1959).

14. Mildred J. Bradley and L. M. Ferris, Recovery of Uranium and Thorium from Graphite Fuels. Laboratory Development of a Grind-Leach Process, ORNL-2761 (Mar. 17, 1960).

15. C. Williams, Progress Report for Nuclear Engineering Department for May 1 - August 31, 1959, BNL-583.

16. Brookhaven National Laboratory, Quarterly Progress Report for October 1 - December 31, 1952, BNL-225.

REFERENCES - Cont'd.

17. Brookhaven National Laboratory, Quarterly Progress Report for April 1 - August 15, 1953, BNL-249.

18. Brookhaven National Laboratory, Quarterly Progress Report for February 16 - May 15, 1954, BNL-297.

19. C. Williams, Progress Report for Nuclear Engineering Department for October 1 - December 31, 1958, BNL-554.

20. C. Williams, Progress Report for Nuclear Engineering Department for January 1 - April 30, 1959, BNL-571.

21. C. Williams, Progress Report for Nuclear Engineering Department for January 1 - April 30, 1960, BNL-618.

22. T. V. Sheehan, Fluidized Powder Processes for ThF_4 Breeder Blanket, BNL-2810 (Sept. 14, 1953).

gcb

DISTRIBUTION

1. L. G. Alexander
2. S. E. Beall
3. M. Bender
4. L. L. Bennett
5. E. S. Bettis
6. A. L. Boch
7. F. F. Blankenship
8-10. R. B. Briggs
11. D. O. Campbell
12. R. S. Carlsmith
13. W. L. Carter
14. G. I. Cathers
15. R. H. Chapman
16. R. D. Cheverton
17. H. C. Claiborne
18. F. L. Culler
19. J. G. Delene
20. D. E. Ferguson
21. T. B. Fowler
22. A. P. Fraas
23. E. H. Gift
24. D. R. Gilfillan
25. H. E. Goeller
26. W. R. Grimes
27. W. H. Jordan
28. P. R. Kasten
29. T. W. Kerlin
30. J. A. Lane
31. R. N. Lyon
32. H. G. MacPherson
33. H. F. McDuffie
34. W. D. Manly
35. W. B. McDonald
36. R. P. Milford
37. A. J. Miller
38. E. A. Nephew
39. C. W. Nestor
40. A. M. Perry
41. P. H. Pitkanen
42. C. A. Preskitt
43. M. W. Rosenthal
44. H. W. Savage
45. A. W. Savolainen
46. D. Scott
47. J. H. Shaffer
48. M. J. Skinner
49. I. Spiewak
50. J. A. Swartout
51. M. Tobias
52. D. B. Trauger
53. Marina Tsagaris
54. R. Van Winkle
55. D. R. Vondy
56. G. M. Watson
57. A. M. Weinberg
58. Reactor Div. Library
59-60. Central Res. Library
61-62. Document Ref. Section
63-64. Laboratory Records
65. LRD-RC
66-76. W. L. Carter

EXTERNAL

77. F. P. Self, AEC-ORO
78-92. DTIE
93. Research and Development Division, ORO
94-95. Reactor Division, ORO