ORNL
MASTER COPY

OAK RIDGE NATIONAL LABORATORY
operated by
UNION CARBIDE CORPORATION
for the
U.S. ATOMIC ENERGY COMMISSION

ORNL-TM-244
COPY NO. - 36
DATE - May 28, 1962

Water Requirements for a Radiochemical Processing Plant

F. E. Harrington

ABSTRACT

The water requirements for a hypothetical plant processing all the fuel from a 15,000 Mw_e nuclear economy were estimated to be:

	gpm	gpd
Fire protection	1,500	-
Potable	7	10,000
Boiler feed	136	196,000
Process cooling	350	504,000
Process makeup	59	85,000
High-level waste cooling	1,500	2,160,000
Total		2,955,000

The high-level waste storage cooling water is the amount required for a tank farm containing waste accumulated over 20 years processing.

NOTICE

This document contains information of a preliminary nature and was prepared primarily for internal use at the Oak Ridge National Laboratory. It is subject to revision or correction and therefore does not represent a final report. The information is not to be abstracted, reprinted or otherwise given public dissemination without the approval of the ORNL patent branch, Legal and Information Control Department.

LEGAL NOTICE

This report was prepared as an account of Government sponsored work. Neither the United States, nor the Commission, nor any person acting on behalf of the Commission:

A. Makes any warranty or representation, expressed or implied, with respect to the accuracy, completeness, or usefulness of the information contained in this report, or that the use of any information, apparatus, method, or process disclosed in this report may not infringe privately owned rights; or

B. Assumes any liabilities with respect to the use of, or for damages resulting from the use of any information, apparatus, method, or process disclosed in this report.

As used in the above, "person acting on behalf of the Commission" includes any employee or contractor of the Commission, or employee of such contractor, to the extent that such employee or contractor of the Commission, or employee of such contractor prepares, disseminates, or provides access to, any information pursuant to his employment or contract with the Commission, or his employment with such contractor.

1.0 INTRODUCTION

This report surveys the water requirements for a hypothetical plant processing all the fuel from a 15,000 Mw_e nuclear economy[1,2] to obtain a limited answer to the question, "What are the water requirements for a radiochemical processing plant?" This question cannot be answered as x gal of y quality water. As in the case of a steel processing plant, where the water requirements range from 1,400 to 60,000 gal/ton of finished steel, only a range can be given per unit of uranium recovered. For each processing plant considered, the specific requirements must be based on a detailed water survey which includes: (a) the water supply quality at the various sites under consideration; (b) the requirements for the process, and its supporting facilities, as it is to be installed; and (c) the plans for water conservation within the plant. The third point is extremely important in radiochemical processing where all water could conceivably become radioactive waste. Water requirements and liquid waste disposal plans should be combined in one survey. All plant operations should be studied in detail to find ways to reuse as much water as possible and to ensure a rigorous separation of the nonradioactive and various levels of radioactive wastes.

Each year the hypothetical plant would process 1,500 metric tonnes of uranium converter fuel, irradiated to a burnup of 10,000 Mwd/tonne, and 270 metric tonnes of thorium converter fuel, at a burnup of 20,000 Mwd/tonne. The uranium, plutonium, and thorium would be recovered as purified and concentrated metal nitrate solutions. The great bulk of fission products would be stored as liquid high-activity-level waste[2,3]. The plant would operate ~250 days on uranium fuel and 80 days on thorium fuels each year. The uranium fuels would be processed by the Purex process[4,5] at a plant throughput rate of 6 tonnes/day. The flowsheet assumed for this hypothetical plant is shown on Figs. 1, 2, and 3. The water requirements for this flowsheet are adequate to cover the change in dissolution procedure for other than aluminum fuel cladding and for the smaller throughput thorium processing. The cooling water requirement for maintaining a maximum temperature of 140°F in the tank farm aqueous waste from 20 years of plant operation is based on the arrangement shown in Fig. 4. This requirement is estimated separately from the processing plant water needs.

In practice, the water system for a new plant is always designed with sufficient excess capacity to cover peak demands and limited plant expansion

such as the preparation of radioactive isotopes. These features are not includes in this survey.

2.0 PROCESS FLOWSHEETS

2.1 Uranium Fuel Processing

Uranium and plutonium are separated from each other and from fission products by the "Purex" solvent extraction process.[4] One of several feasible chemical flowsheets for the hypothetical plant, taken from the open literature,[5] includes dissolution of the metallic fuel elements in nitric acid, preparation of the solvent extraction feed solution, and a first cycle of extraction and partitioning of the uranium and plutonium (Fig. 1). This figures is based on aluminum clad elements but the water requirements will be essentially the same for the dissolution of more exotic cladding materials. Solvent extraction partitioning is followed: for the uranium by stripping, feed adjustment, a second solvent extraction cycle, and concentration of the product by evaporation; and for the plutonium, a second solvent extraction cycle, an anion exchange cycle, and evaporation to product (Fig. 2). Finally the high activity waste is concentrated and neutralized for storage, nitric acid is recovered from wastes and backcycled, and the organic extractant is purified for reuse (Fig. 3). A flow of 100 on these flowsheets is equal to 747 gal for each tonne of uranium processed. Although this over-all chemical flowsheet contains fewer solvent extraction cycles than are used in most currently operating plants, it does not attempt the ultimate in reduction of water usage and waste volumes.

2.2 High Activity Waste Storage

Heat generation and removal is one of the serious problems in tank storage of high activity waste from high burnup power reactor fuel processing. The figures in a previous study[3] show that the system shown in Fig. 4 will maintain the 5 Purex and 5 Thorex waste storage tanks filled during 20 years of processing at a maximum of 140°F. The total water requirement for the 20-yr tank farm is slightly less than twice the rate required for single newly-filled tanks of each waste and is close to the amount for a plant at equilibrium.

3.0 WATER REQUIREMENTS

Any radiochemical plant will require at least five distinct categories of water usage; namely, plant fire protection, potable, boiler

feed, cooling water, and process makeup water. In this study the cooling water is further divided into process cooling and high-level waste tank farm cooling.

3.1 Fire Protection

Water requirements for fire protection[5] vary with plant location, insuring firm, operating company policy, and other factors. Raw water, or certainly water with a minimum of treatment, is satisfactory for fire water. A 6-ton/day uranium plant would likely have a 1500 gpm supply. The discharge of water during a fire must be studied in detail, considering the possible effects on the waste collection system.

3.2 Potable Water

Potable water will be required for drinking, showers, lavatories, and a laundry, if one is provided, for contaminated clothing. This water, of course, must be of approved biological quality and should also be free of objectionable tastes and odors and not unduly hard. Where softening is required, the hot water supply only is softened by the sodium cation exchange process. The hypothetical plant under consideration is conceived as a production plant with laboratories for control purposes only and with no service facilities such as a laundry. A plant of this type would employ less than 200 people and require less than 10,000 gpd of potable water.

3.3 Boiler Feed Water

Boiler feed water requirements for quality depend on the steam pressure required and for quantity on the sum of all of the system water losses. Good boiler feed water will not cause appreciable scale formation, corrosion. priming, or foaming. In the hypothetical plant 125 psi steam will satisfy all requirements. Treatment by sodium cation exchange followed by deaeration is sufficient for most water supplies and is assumed for this plant. The quantity required is 196,000 gpd as shown in Appendix A.

3.4 Process Cooling Water

Cooling water used in this plant consists of both makeup water for an open recirculation system and a supply for once-through usage. Cooling water used in single-purpose equipment, such as condensers, is monitored and recycled through a cooling tower. The quality and treatment of this water are best determined by scaling tests conducted on the supply water available, concentrated by re-use, and normal cooling tower considerations.

As shown in Appendix B, the cooling water system will require:

3500 gpm recirculation system, $30^{\circ}F$ ΔT

175 gpm makeup for recirculation system

175 gpm once-through

The once-through usage is usually on-off type usage, and the system should have excess capacity to cover these surges. It is possible to use a closed circuit recirculation system with air-cooled finned exchanger and to recirculate all cooling water.

3.5 Process Water

Process makeup water is used to make up nonradioactive chemical solutions used throughout the process. The calculation of the quantity required, 86,000 gpd, is presented as Appendix C. At least the portion of this water used in the final purification cycles, 19,000 gpd, must meet the following specifications:

Constituent	Amount, ppm
Total hardness	0-2
Ca	0.4
Mg	0.25
Cl (as NaCl)	0.6
SO_4 (as Na_2SO_4)	1.5
Total dissolved solids	1-4.5 exclusive silicates
Silica (SiO_2)	7.5
CO_2	100
Na (as equiv. $CaCO_3$)	1
Total cation (as equiv. $CaCO_3$)	4
HCO_3 (as equiv. $CaCO_3$)	2
Total anion (as equiv. $CaCO_3$)	4

This portion of the water usually requires purification by hydrogen cation exchange and strongly basic anion exchange.

3.6 High-Level Waste Storage Cooling Water

Heat generation is one of the more serious problems in the tank storage of waste assumed for this hypothetical power reactor fuel processing plant. In a report[6] now in preparation, the system shown in Fig. 4 is proposed for dissipating the total heat from an accumulation of 20 years of plant operation. The makeup water required for this system is 1.2% for evaporation loss, 1% for wind loss, and an estimated 488 gpm for blowdown for a total of 1500 gpm.

3.7 Other Considerations

In the process flowsheets the condensate from the evaporators is collected as low-activity waste and disposed of to the ground. It is possible, and at some sites mandatory, to recover and re-use this water.

Schematic drawings of the combined water supply and waste disposal flows are shown in Figs. 5 and 6 for the processing section of the hypothetical plant and of a more complete water recycle plant, respectively. Appendix D outlines the calculation of waste volumes. The more complete recycle plant is not based on a completely calculated concept but is considered to be a desirable goal.

The design of the laboratory section of a plant must give close attention to water distribution and waste collection. Here, as in the processing canyon, indiscriminate collection of wastes could result in unnecessarily large volumes of low-activity waste. The laboratory would also be equipped with a small still for the preparation of distilled water.

In cooling the stored high-activity waste, water requirements can be reduced by operating with the waste tanks at a temperature higher than $140^{\circ}F$ and/or by using an air-cooled exchanger. If the tanks were operated at boiling with the reflux condenser's cooling water removing the heat in an open recirculation system, the cooling water ΔT could easily be eight times the 12° shown on Fig. 4. This, of course, would reduce the volume recirculated and the wind loss by a factor of 8 but there would be no change in evaporation loss and only a small reduction in the required blowdown.

The actual extent one is willing to go to reduce water consumption will be decided upon economic factors related to the water supply and waste disposal potential of each potential site. Most sites will find it economical to utilize open recirculation as indicated herein, but in some cases where water supply is short or waste disposal is difficult closed recirculation is best.

4.0 BIBLIOGRAPHY

1. J. J. Perona, R. L. Bradshaw, J. T. Roberts, J. O. Blomeke, "Evaluation of Ultimate Disposal Methods for Liquid and Solid Radioactive Wastes, Part II. Conversion to Solid by Pot Calcination," ORNL-3192, Sept. 27, 1961.

2. J. J. Perona, R. L. Bradshaw, J. T. Roberts, J. O. Blomeke, "Evaluation of Ultimate Disposal methods for Liquid and Solid Radioactive Wastes, Part I. Interim Liquid Storage," ORNL-3128, August 7, 1961.

3. E. R. Irish and W. H. Reas, "The Purex Process - A Solvent Extraction Reprocessing Method for Irradiated Uranium," TID-7534, Book 1, Symposium on the Reprocessing of Irradiated Fuels - Brussels, Belgium, May 20-25, 1957.

4. E. R. Irish, "Description of Purex Plant Process," HW-60116, May 19, 1959.

5. Crosby, Fiske, Forster, NFPA Handbook of Fire Protection, 11th Edition, National Fire Protection Association, 1954.

6. W. G. Stockdale, E. D. Arnold, J. O. Blomeke, "The Economics of Permanent Disposal of Power Reactor Wastes in Tanks," to be issued as ORNL-2873.

APPENDIX

A. Estimate of Boiler Feed Water Volume

Process Condensates	Figure	Flowsheet Flow
Dissolver	1	450 (estimate)
1UD	2	324
2UD	2	268
XPD	2	0.8
2WF	3	385
2WD-AAF	3	385
AAD	3	438
AFD	3	98
3WD	3	147
WSC	3	450
	Total flowsheet flow =	2946

Estimate steam required = 120% of heat for above evaporations and blowdown of 10% of the steam for evaporation.

$$\text{Boiler feed water} = \frac{(29.46)(747)(6)(971)(1.2)(1.1)}{868} = 1.96 \times 10^5 \text{ gpd}$$

B. Estimate of Process Cooling Water Volume

Cooling water for condensers in Appendix A:

$$\frac{29.46\ (747)(6)(1000)}{(1.44 \times 10^3)(30)} = 3060 \text{ gpm}$$

Cooling water for other uses, such as cooling compressors, estimated = 440 gpm.

Both requirements are fulfilled by a 3500 gpm open circuit recirculation system. The makeup water requirements are 3% for evaporation (30°F ΔT), 1% for wind loss and 25 gpm blowdown for a total of 175 gpm.

An additional 175 gpm is allowed for once-through use in dual-purpose process heat exchangers.

This water and the heating steam condensate, as well, could be recirculated in either closed or open recirculation systems after monitoring. Heating steam condensate could be recirculated to the boiler feed water makeup system.

C. Process Solution Makeup Water Estimate

Stream	Flowsheet	Flowsheet Flow
$NaNO_3$	1	17.5
NaOH	1	4.4
Jacket rinse	1	6.85
Reaction water	1	3
Dissolution acid	1	47.7
Dilution water	1	8.9
Absorber water	1	49.3
Cake wash	1	0.31
Slurry wash water	1	0.15
HNO_3 addition	1	2.7
$NaNO_2$ addition	1	0.78
HSS	1	59
IBX	1	0.20
$NaNO_2$ addition	1	0.78
HSS	1	59
IBX	1	0.20
$NaNO_2$ addition	1	0.78
ICX	2	398
Fe(SA) addition	2	0.55
2 DS	2	33*
2 DIS	2	25*
2 EX	2	317*
2 AS	2	3.10*
2 BX	2	2.52*
XAF-HNO_3	2	2.28*
XAS	2	0.85*
XCX	2	1.2
NaOH addition	3	1.7
AAR	3	109
Backup facility acid	3	53
AFR	3	34
Na_2CO_3 addition	3	23.

Stream	Flowsheet	Flowsheet Flow
$KMnO_4$ addition	3	1.6
IOS	3	23
IOC	3	7.5
20S	3	18
Total		1263.29

*Must meet high-quality specification given in Section 3.4, total = 384.95 flowsheet flow.

Allow 50% excess for unlisted process water requirements and 10% for high purity uses:

Total makeup water volume = 12.6329(747)(6)(15) = 85,000 gpd

Total high purity volume = 3.8495(747)(6)(1.1) = 19,000 gpd

D. Waste Volume Estimate

1) Low-Activity Waste

Stream	Flowsheet		Flow
IUD	2		324
2UD	2		268
AAD	3		438
AFD	3		98
3WD	3		147
		Total	1275

12.75 (747)(6)	=	57,200
Other, i.e., laboratory sources	=	27,800
Volume	=	85,000

2) Intermediate-Activity Waste

Stream	Flowsheet		Flowsheet Flow
Cooling waste	1		42.9
Cake slurry	1		0.27
IOW	3		55.5
20W	3		18
		Total	116.67

Volume = 1.1667 (747)(6) = 5230 gpd.

3) <u>High-Activity Waste</u>

Waste self-concentration flow = 7.35 (Fig. 3)

Volume = 0.0735 (747)(6) = 330 gpd.

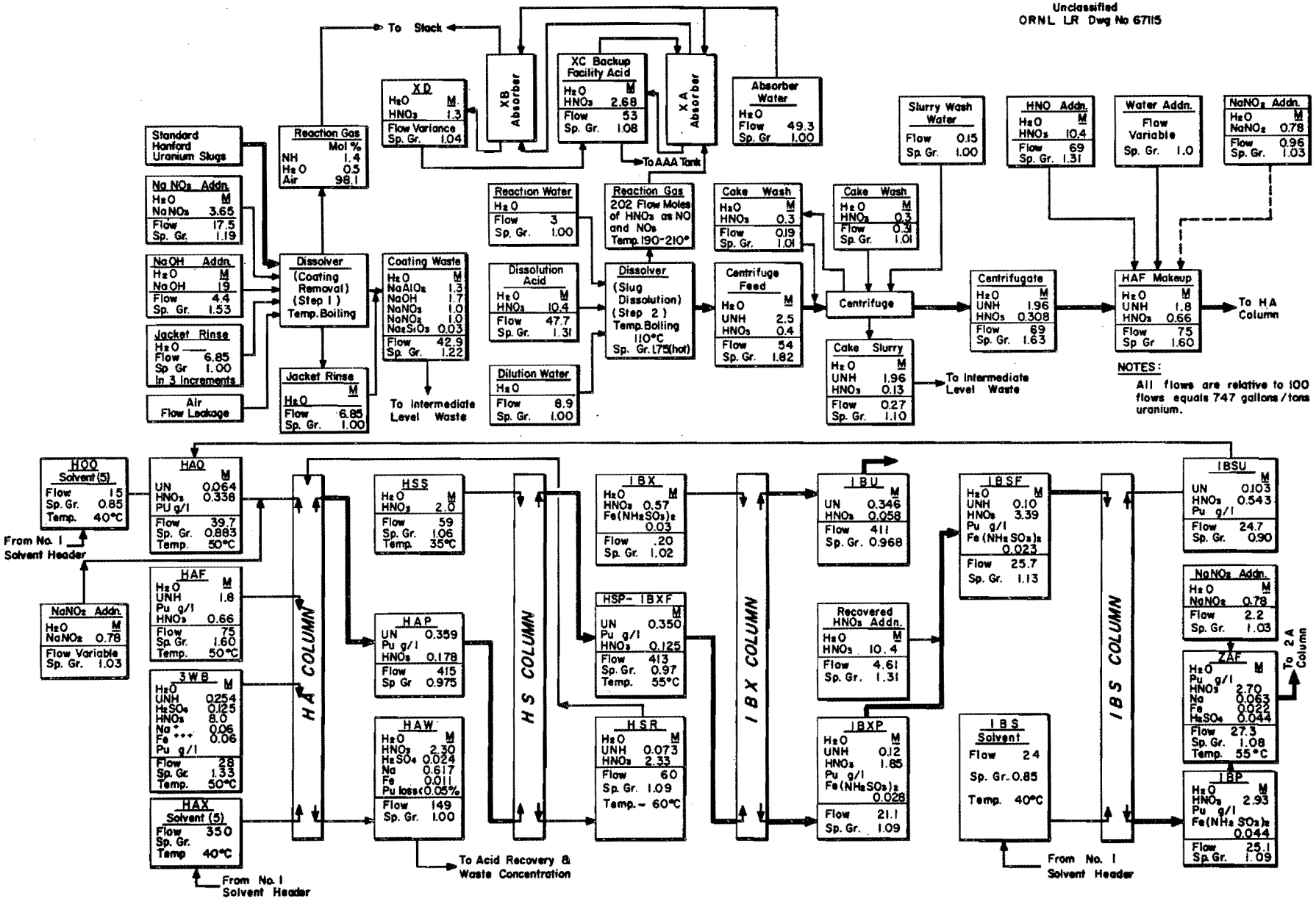

Fig. 1 Purex two-cycle flowsheet - iodine backup feed preparation first decontamination & partition cycle

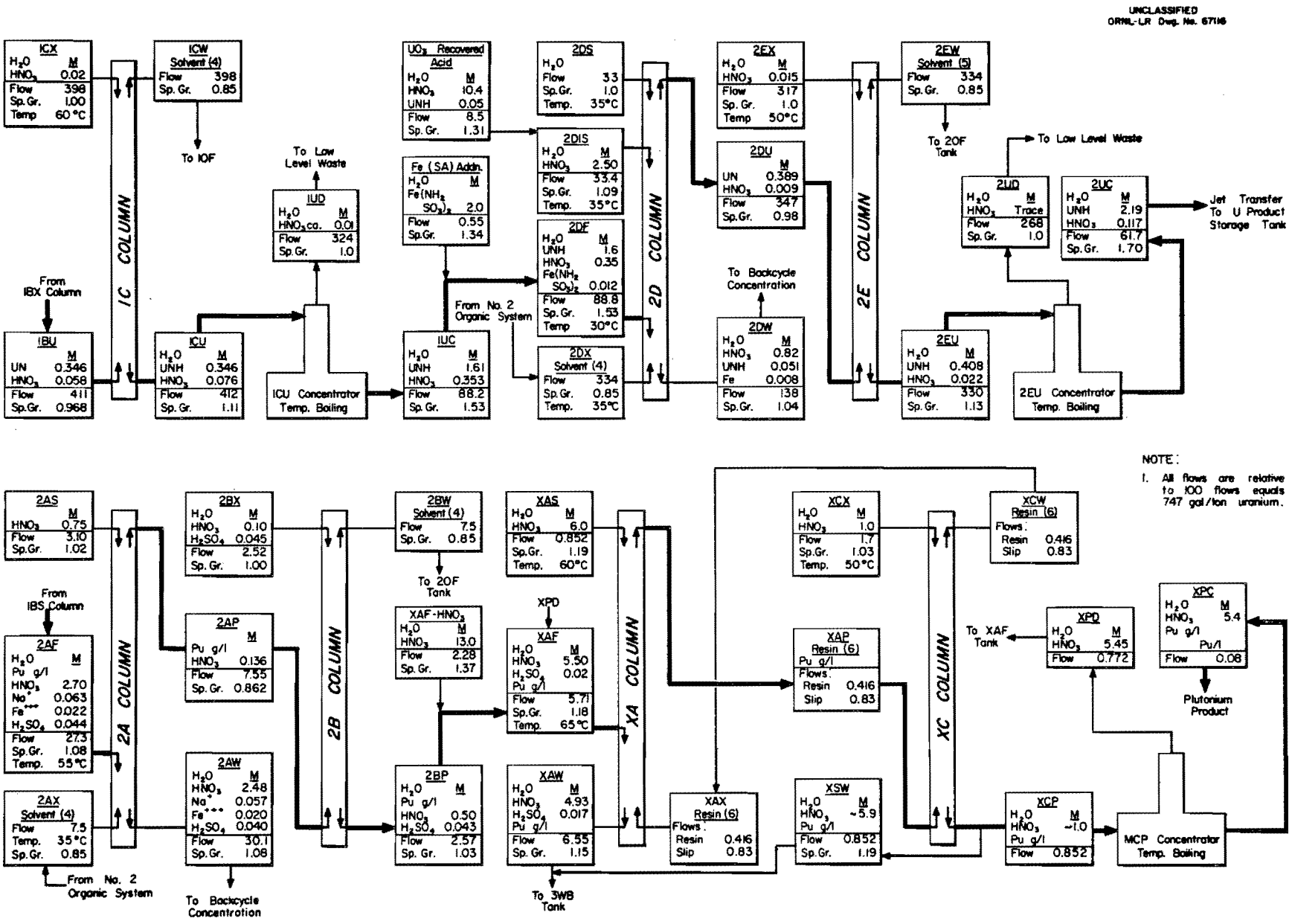

Fig. 2. Purex two-cycle flowsheet (final uranium cycle - final plutonium cycle - plutonium ion exchange)

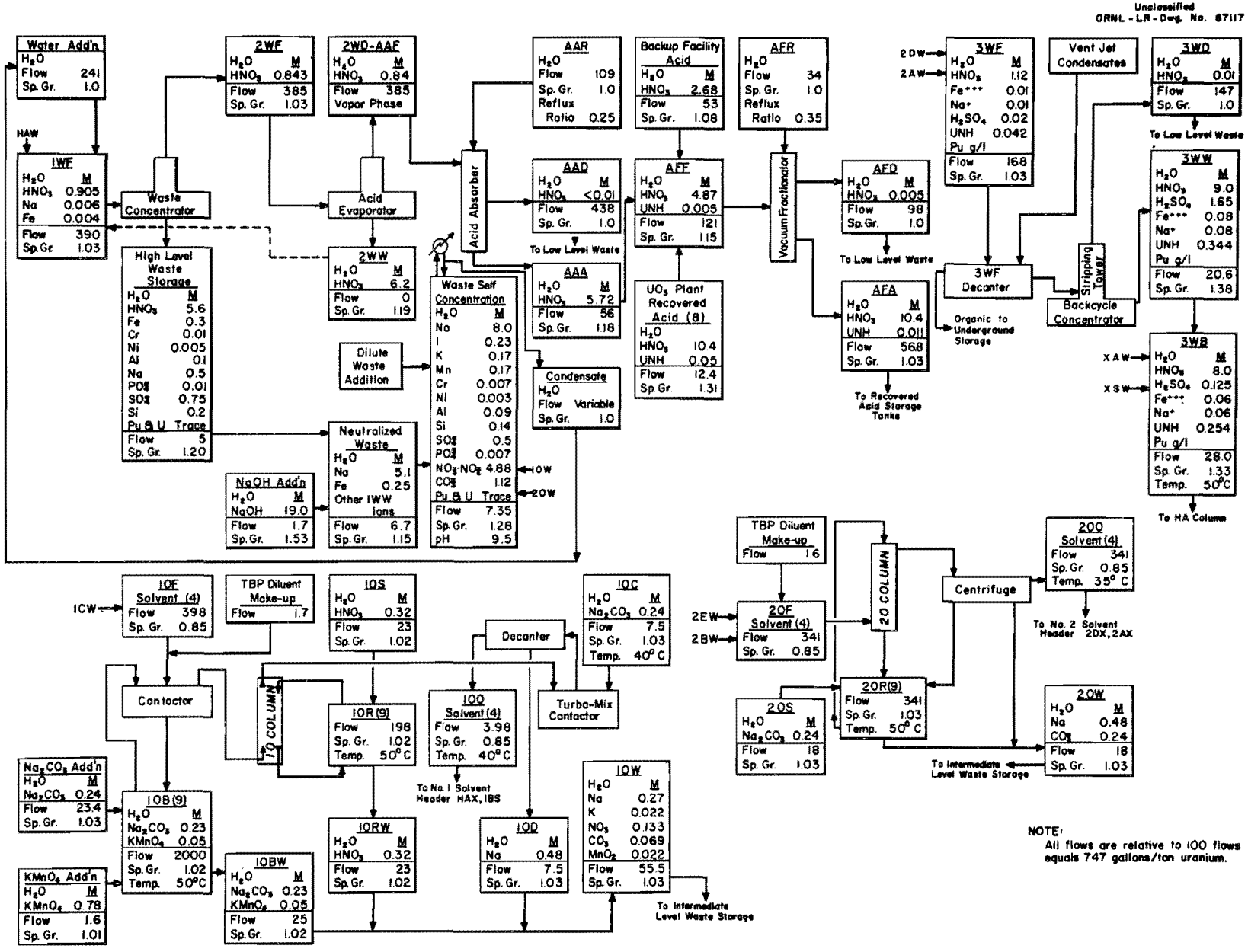

Fig. 3 Purex two-cycle flowsheet -waste concentration-acid recovery-backcycle concentration-organic recovery

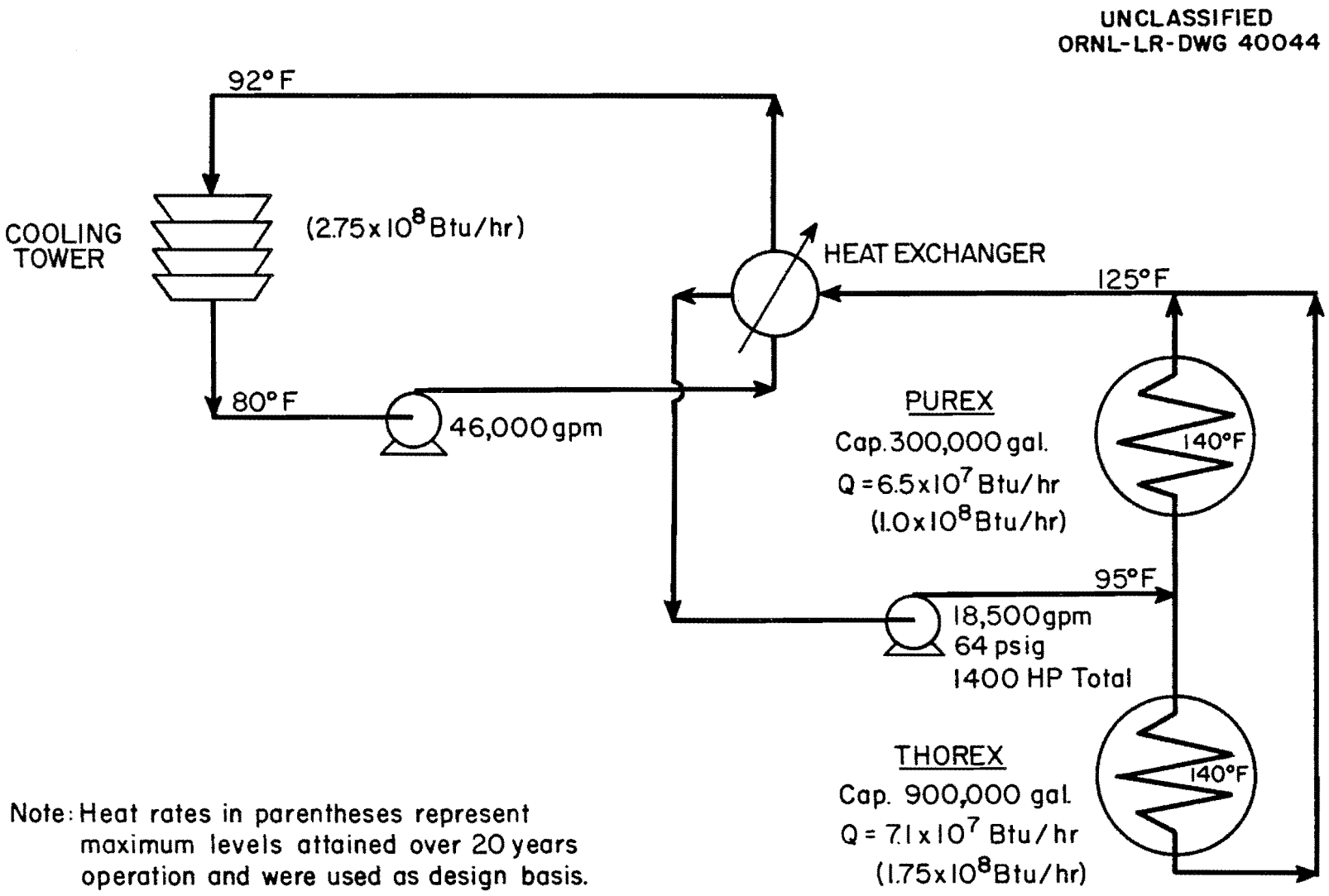

Note: Heat rates in parentheses represent maximum levels attained over 20 years operation and were used as design basis.

Fig. 4 Schematic of High-Activity Waste Tanks Water Cooling System.

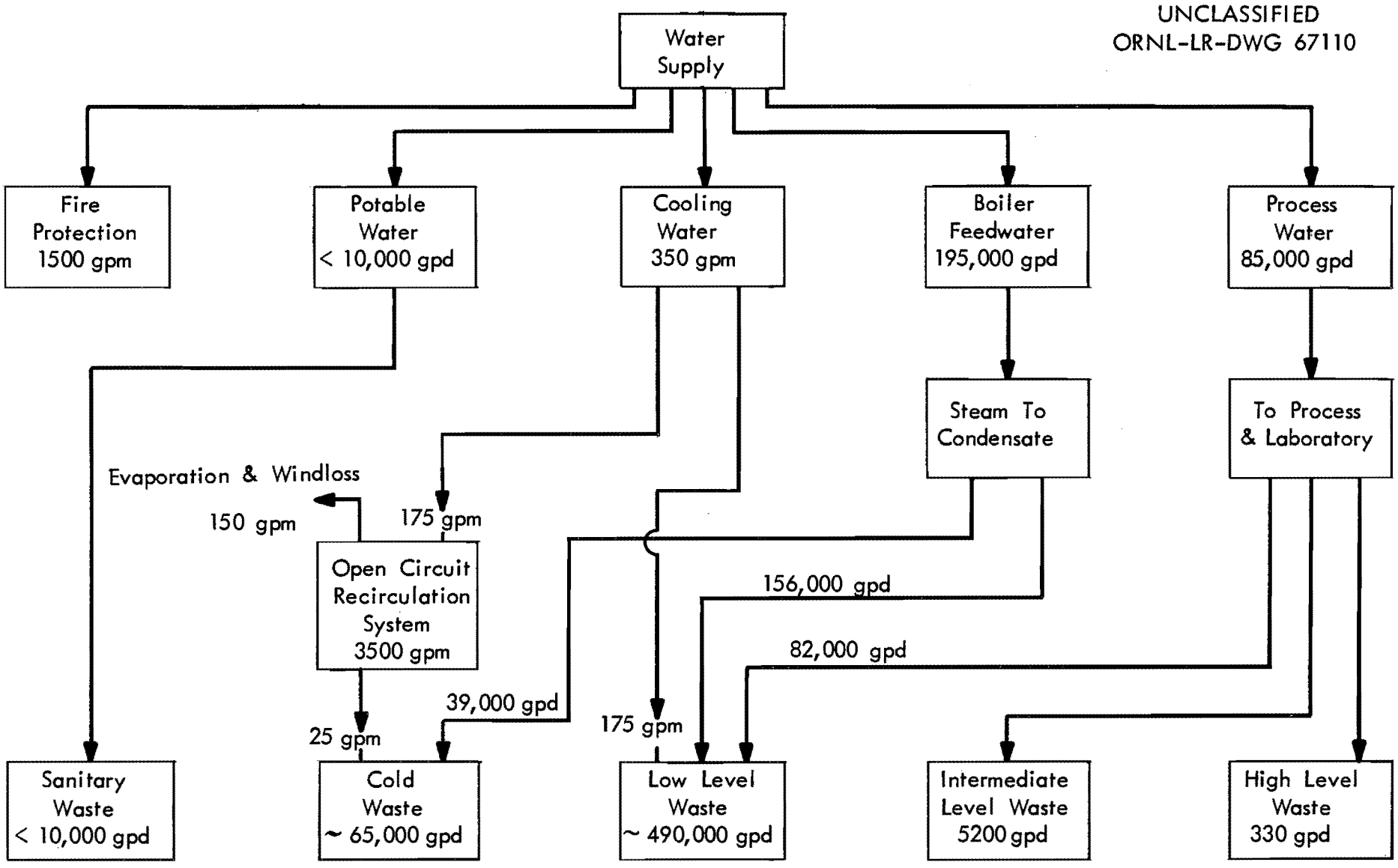

Fig. 5. Water-waste schematic flowsheet hypothetical 6 ton/day Purex Plant.

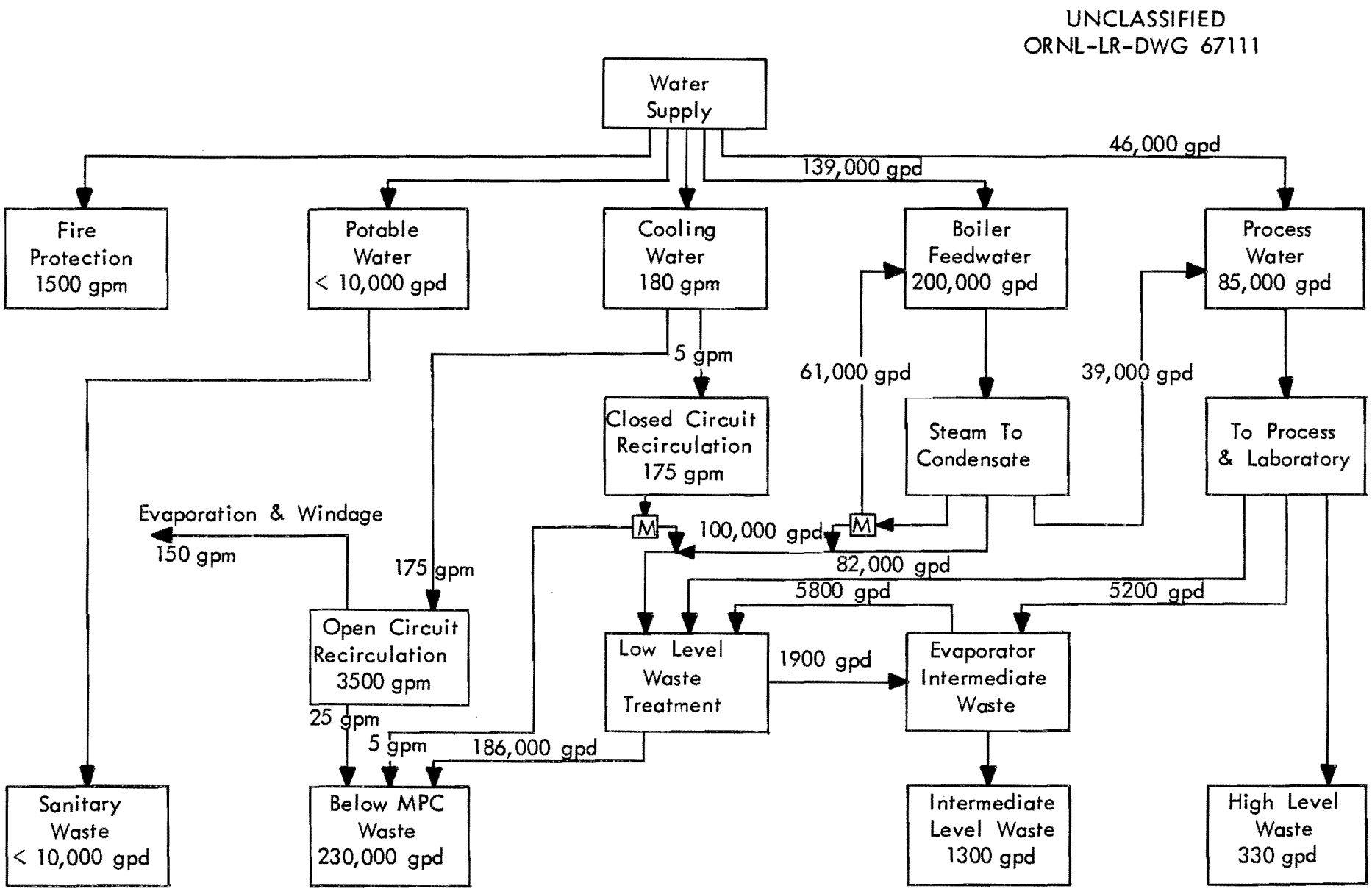

Fig. 6. Possible water-waste flow schematic.

DISTRIBUTION

1. R. E. Blanco
2. J. O. Blomeke
3. R. L. Bradshaw
4. J. C. Bresee
5. F. N. Browder
6. K. B. Brown
7. F. L. Culler, Jr.
8-19. Wallace de Laguna
20. D. E. Ferguson
21. H. E. Goeller
22. H. B. Graham
23. A. T. Gresky
24-25. F. E. Harrington
26. J. M. Holmes
27. J. T. Long
28. J. J. Perona
29. E. M. Shank
30. M. J. Skinner
31. E. G. Struxness
32. W. E. Unger
33. J. W. Ullmann
34. H. O. Weeren
35. M. E. Whatley
36. Laboratory Records, RC
37-41. Laboratory Records
42-43. Central Research Library
44. Document Reference Section
45. R & D Division, ORO
46-60. DTIE