MAST

OAK RIDGE NATIONAL LABORATORY

operated by

UNION CARBIDE CORPORATION

for the

U.S. ATOMIC ENERGY COMMISSION

ORNL-TM-300

34

ISOTOPES DIVISION

RESEARCH AND DEVELOPMENT REPORT

FEBRUARY 1962

CAUTION

Further dissemination of the preliminary information contained in this document is unauthorized without the approval of the ORNL Patent Branch of the Legal and Information Control Department. This document has been made available to DTIE only to meet minimum requirements of AEC Manual Chapter 3202.

LEGAL NOTICE

This report was prepared as an account of Government sponsored work. Neither the United States, nor the Commission, nor any person acting on behalf of the Commission:

A. Makes any warranty or representation, expressed or implied, with respect to the accuracy, completeness, or usefulness of the information contained in this report, or that the use of any information, apparatus, method, or process disclosed in this report may not infringe privately owned rights; or

B. Assumes any liabilities with respect to the use of, or for damages resulting from the use of any information, apparatus, method, or process disclosed in this report.

As used in the above, "person acting on behalf of the Commission" includes any employee or contractor of the Commission, or employee of such contractor, to the extent that such employee or contractor of the Commission, or employee of such contractor prepares, disseminates, or provides access to, any information pursuant to his employment or contract with the Commission, or his employment with such contractor.

ORNL-TM-300

ISOTOPES DIVISION

RESEARCH AND DEVELOPMENT REPORT

February 1962

By

J. H. Gillette

Prepared from reports by:

P. S. Baker
E. E. Beauchamp
L. O. Love
Eugene Lamb

Date Issued

OCT - 9 1962

OAK RIDGE NATIONAL LABORATORY
Oak Ridge, Tennessee
operated by
UNION CARBIDE CORPORATION
for the
U. S. ATOMIC ENERGY COMMISSION

TABLE OF CONTENTS

1. Radioisotope Process Development 2

Multiple Neutron Capture Reactions 2
Short-Lived Fission Products 2
Recovery of Homogeneous Reactor Test Fuel. 2
Pulsed Mixer-Settler 3
Beta-Heating Calorimeter 3
Carrier-Free Beryllium-7 4
Palladium-103. 5

2. Calutron Process Development 6

Inhomogeneous Field Separator Project. 6
Source Studies 6
Receiver Studies 9
Ion Beam Studies 14
Chemical Development 14

3. Radioactive Source Development 18

Precipitation of Cesium Tetraphenyl Boron. 18
Fission Product Chemistry. 18
Cesium Recovery 18
Radiographs Using Bremsstrahlung Sources 19
Americium-241. 19

4. Targets. 22

Target Fabrication 22
Target Development 23

5. Thermal Diffusion. 23

1. RADIOISOTOPE PROCESS DEVELOPMENT

Multiple Neutron Capture Reactions

The enrichment of the stable Ca^{46} isotope by multiple neutron capture reactions was investigated by irradiating a sample of enriched Ca^{44} (99%) for 19 months at a flux of 3.2×10^{14} neutrons cm^{-2} sec^{-1} in the ORR and analyzing it by mass spectrometry. The increase of the Ca^{46} content from <0.005% to 0.012 ±0.002% indicates a capture cross section for Ca^{45} of ~6 barns which is too small for a practical method of enriching Ca^{46} in the ORR. The equilibrium concentration of Ca^{45} produced during a reactor irradiation is undesirable when the Ca^{46} is used as a target for the production of Ca^{47}. Preliminary calculations indicate that multiple neutron capture reactions would be feasible in the neutron field produced by the explosion of a nuclear device.

Short-Lived Fission Products

The ion-exchange separation of Ba^{140} and Sr^{89} on 4% cross-linked Dowex 50 was investigated. The elements either were not adsorbed on the resin or were immediately eluted from the resin without separation when the flow of 0.2 M citric acid at a pH of 6.5 was begun.

The efficacy of the 16% cross-linked resin in separating the gross fission products was then investigated by absorbing these elements on a column. The rare earths were eluted with 0.2 M citric acid at a pH of 3.0 and then the Ba^{140} and Sr^{89} at a pH of 7.0. Product quality Y^{91} was obtained, but the fractionation of the remainder of the rare earths and of the alkaline earths was unsatisfactory.

The information from these runs indicates that the alkaline earths and rare earths should be separated prior to the ion-exchange purification. The rare earth fraction should be processed using 4% cross-linked resin and the alkaline earths using 12% cross-linked resin.

Recovery of Homogeneous Reactor Test Fuel

A differential extraction process was used to recover ~11 kg of irradiated U^{235} from a sulfate solution containing a relatively high concentration of uranium in a dilute sulfate solution. The overall recovery was 99% and the average decontamination factor was $>1 \times 10^6$.

A flowsheet was developed to recover U^{235} from a second batch which was relatively dilute in uranium and contained ~2000 g of U^{235} in 450 liters of 4 M H_2SO_4. The feed solution of 555 liters was adjusted to 3.25 M H_2SO_4 and 3.0 M HNO_3 and then contacted batchwise in the differential extractor with 76 liters of 50% di-amyl-amyl phosphonate. Approximately 99% of the uranium was recovered by stripping one volume of DAAP successively with

$\frac{1}{2}$ volume of 1 M NH_4HCO_3 and $\frac{1}{4}$ volume of 1 M NH_4HCO_3. The decontamination factor was 1×10^3. For additional decontamination this solution can be made 3 M in HNO_3 and differentially extracted with 30% TBP-Amsco.

Pulsed Mixer-Settler

The development of an eleven-stage pulsed mixer-settler is complete and tests indicate essentially 100% stage efficiency.

The pulsing in the mixer-settler is provided by a pneumatic cylinder which is driven by a primary pneumatic cylinder. The primary cylinder pulse frequency and stroke length are controlled by a slide valve. The driven cylinder strokes in two directions and provides pulsations which are 180° out of phase to two manifolds. A pulse tube from each manifold enters each mixing chamber in such a position as to induce a vertical swirling motion in the mixing chamber. Venting orifices are provided in the pulse manifold to stabilize the pressure and to assure that all the liquid is expelled from the pulse tubes on each stroke.

Beta-Heating Calorimeter

An improved calorimeter to measure the heat produced by beta decay was constructed and tested. In order to obtain reproducible results, the base of the calorimeter was designed to achieve good heat transfer and a uniform base temperature; the junctions between the thermopile and the copper lead wires were relocated to prevent the thermal conductivity of these wires from having any influence on the calorimeter behavior; and the cup which holds the radioactive source in the calorimeter was designed for easier loading.

Using an electrical heater to simulate a radioactive source, the new calorimeter was calibrated and its behavior investigated. The data in Table 1.1 show that the effect of the source power on the calorimeter constant is very small in the range of conditions experienced. The cooling water temperature was 10 to 11°C at a flow of 3.5 liters/min.

The effect of the rate of flow of the cooling water was determined. Calibration constants of 3.656 and 3.667 w/mv were obtained at flows of 8 and 1.15 liters/min., respectively. The small variation of the constant indicates that precise control of the flow is not required.

Table 1.1. Calibration of Improved Beta Calorimeter

Power (w)	Thermopile Output (mv)	Calibration Constant (w/mv)
24.18	6.594	3.667
24.32	6.626	3.671
18.38	5.005	3.673
18.08	4.929	3.669
12.27	3.339	3.674
12.32	3.354	3.675
6.17	1.682	3.676
	Average	3.672

Cooling water at 27°C gives a calibration constant which is 1.4% lower than that with 10°C water; the calculated change is 1.56%.

The standard deviation of points from the mean is 0.0031 w/mv or 0.1% of the constant. The 95% confidence limit of the mean is ±0.0029 w/mv or 0.08%. In practice, however, the value of this constant will be affected by changes in the water temperature.

The precision of the measurements is limited by the instrumentation to ~0.3% for 15-w samples. The error is inversely proportional to the sample size.

Carrier-Free Beryllium-7

To establish the feasibility of maintaining a carrier-free Be^7 inventory, a 30-mil natural-lithium-metal casting was irradiated for 1.5 hr with 270 μa-hr of 17.5 Mev protons in the 86-Inch Cyclotron. The yield was 164 mc of Be^7 per ma-hr, which compares favorably with a predicted yield of 170 mc of Be^7 per ma-hr with 22 Mev protons.[1]

---

[1] J. A. Martin, et al., Nucleonics 13 (3), 28 (1955).

The target was processed by dissolving the lithium metal from the target with 0.02 N HCl and carrying the Be^7 on an $Fe(OH)_3$ precipitate for a total of three precipitates. The Fe^{3+} was removed by adsorption of $FeCl_4^-$ from 12 M HCl by IR-400, an anion exchanger, and the solution was boiled down and converted to the nitrate form. The chemical yield of Be^7 was 99.2%.

Palladium-103

Palladium-103 ($t_{\frac{1}{2}}$=17 d) is a valuable tracer for medical application,[2] since the half-thickness of its 20-kev x ray is ~1 cm of tissue. A 3.0-g palladium target, which had been irradiated at a neutron flux of 2.3×10^{13} neutrons cm^{-2} sec^{-1} for 2.84 yr, was processed to recover the Pd^{103} and to determine cross section and yield data. Major contaminants in the Pd^{103} were Ag^{111}, Ag^{110m}, and Ir^{192}. The silver activity was scavenged from the solution by adding a silver carrier and precipitating AgCl four times in succession. The palladium was then precipitated as the dimethylglyoxime. The 3.0 g-sample of palladium was calculated to contain 47.5 mc of Pd^{103}, 156 mc of Ir^{192}, and 155 mc of Ag^{110m} at reactor discharge.

The observed cross section for producing Pd^{103} was 0.42 barns, as compared with 4.8 barns given in the literature. Using 0.42 barns as the cross section, 10 mc of Pd^{103} could be produced by irradiating 0.26 g of natural palladium or 5 mg of 50%-enriched Pd^{102} for 21 days in the ORR.

---

[2] V. P. Harper, Semi-Annual Report to the Atomic Energy Commission Sept., 1960, ACRH-14, pp. 44-9.

2. CALUTRON PROCESS DEVELOPMENT

Inhomogeneous Field Separator Project

The magnetic field produced through the use of pole pieces as initially formed for the inhomogeneous field separator varies 0.04% from theoretical for the shorter radial positions. Since the field index is known to be a function of magnetic gap width, the field resulting from a 1/8-inch reduction in gap width was determined and ion orbits in such a field were calculated and determined to exhibit no improvement.

The focal pattern which would be produced by the present field was calculated and mapped for a source system utilizing an ion exit slit curved to coincide with flux lines. This source configuration produces a flatter focal pattern than that produced through the use of a straight ion exit slit and may be preferred from the standpoint of receiver construction. However, this is an untried source geometry and its performance will need to be verified experimentally.

Separation runs in the inhomogeneous field separator were made with tantalum chloride charges prepared internally. During these runs, isotopic purity of enriched Ta^{180} has been raised to 0.40%, the highest purity available from any separator to date.

Source Studies

A comparison was made between the performance of the standard calutron source with one ionization filament and that of a modified source with two ionization filaments arranged as shown schematically in Fig. 2.1 and Fig. 2.2.

In the arrangement illustrated in Fig. 2.1 both filaments were operated simultaneously to produce two arcs in which the electron density was increased over that experienced in conventional operation. During four calcium separation runs made with this source arrangement, the average calcium ion current to the collector was 123 ma as compared with an average of 112 ma recorded for a standard source over a two-month operating period. Although this system provides an increase in ion output, its utility is decreased by increased time required for servicing and by deterioration of the focal pattern due to electrical field distortion resulting from the use of a segmented ion exit slit to cover the anode.

In the arc chamber configuration indicated in Fig. 2.2 each filament can be utilized separately or the two filaments can be used simultaneously to increase the electrons available for ionization. Equal ion outputs can be achieved during the use of either filament or use of both filaments operating simultaneously if arc conditions are properly adjusted. Since double-filament arc chamber geometry provides a means of utilizing two independently operable filaments, its use increases run time prior to

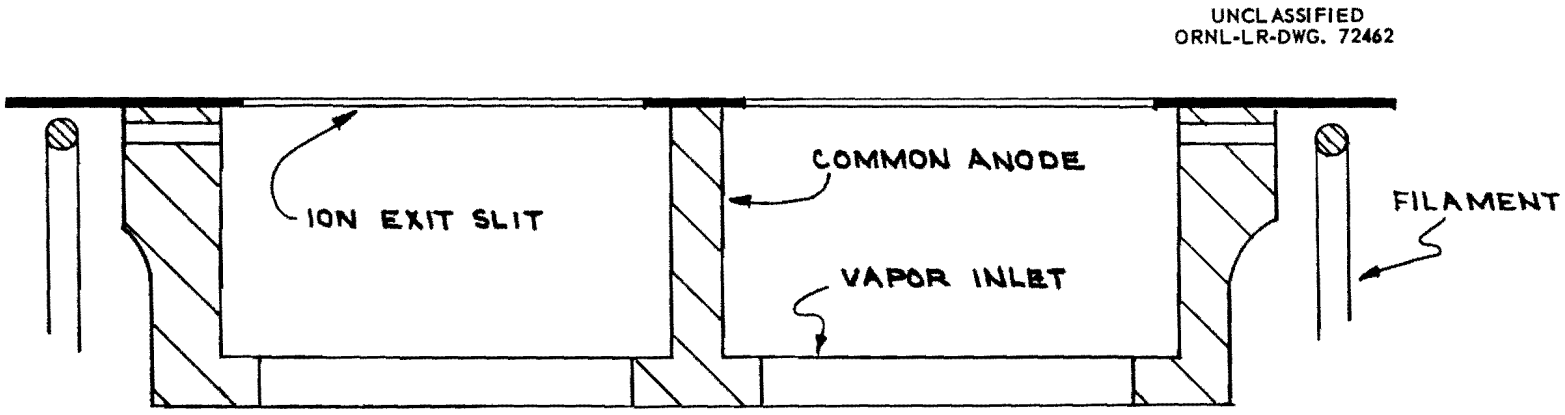

Fig. 2.1. Dual Arc Chamber

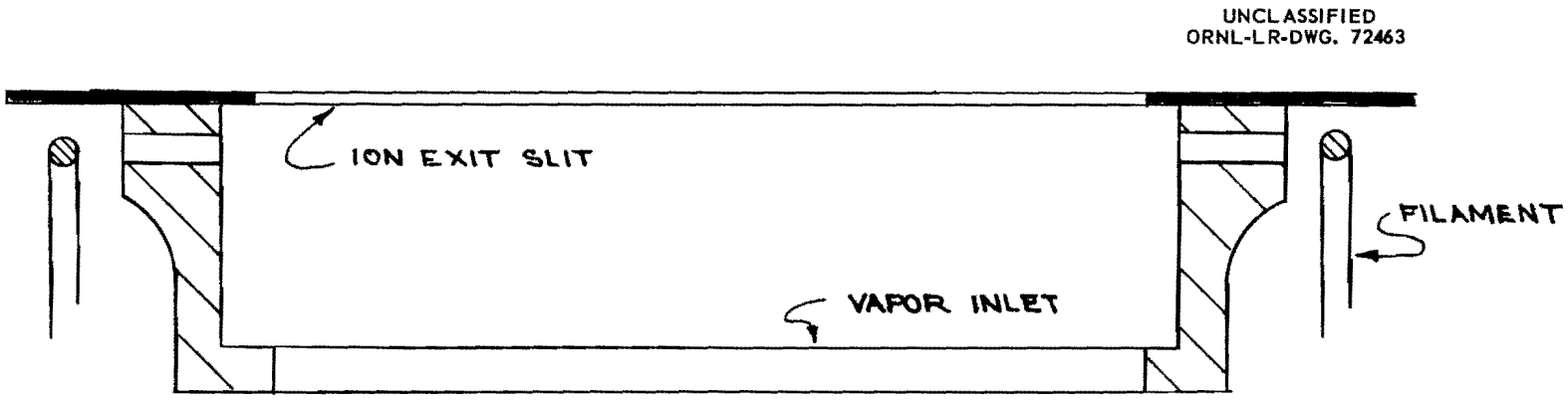

Fig. 2.2. Double Filament Arc Chamber

failure of both filaments. This arc chamber geometry is now considered standard for use in calcium separations.

In an attempt to minimize the quantity of neutral charge vapor entering the vacuum system, an ion source was constructed as indicated in Fig. 2.3. It was tested experimentally with calcium feed. In principle the calcium charge vapor is directed downward through the arc toward a water-cooled reservoir in which condensation of calcium could occur. Ionized material is passed through the slit system in the usual manner. Three runs were completed with this system with each run requiring excessive heating of the charge container to provide the expected ion output. In addition, the process efficiency achieved during these runs was 18% as compared with 23% experienced in normal operating sources. Thus, the arrangement failed to provide the desired effect, but did tend to verify the concept that charge vapors may pass through the arc region more than once prior to escaping the region as neutrals or as ions.

Receiver Studies

A separation is planned to provide enriched Bi^{210} and Bi^{208} from irradiated Bi^{209}. Abundances of Bi^{210} and Bi^{208} in the feed are ~150 and 25 ppm respectively. In order to perform such a separation without undue erosion of the Bi^{209} receiver pocket, a receiver was constructed as shown in Fig. 2.4. The design features permit collection of the abundant Bi^{209} in the large, centrally located pocket while the desired Bi^{210} and Bi^{208} are collected in the smaller, shielded pockets which contain platinum foil linings. The wanted ion beams strike on graphite, causing both graphite and bismuth to sputter to the platinum surfaces. Bismuth is recovered in oxide form through ignition of the material collected on the platinum foils.

Values for the sputtering of graphite by Ca^{40} continue to be accumulated as the series of runs progress. Also, the quantity of Ca^{46} retained on various substances continues to be studied. Graphite, normal copper, and single crystals of copper positioned with various lattices facing the beam are being subjected to bombardment at current densities of 0.2 $\mu a/cm^2$ of target area.

Measurements determining the sputtering ratio of graphite by Ta^{181} ions at 38 kv and current densities of 0.14 ma/cm^2 were completed. Thirteen determinations involving quantities of Ta^{181} ranging from 10 to 150 g were made. The interior surface of the pocket on which the 150 g of Ta^{181} and associated graphite sputtered is shown in Photo 2.1. The number of carbon atoms removed from the target surface by each incoming Ta^{181} ion varied from 6.77 to 7.85 and averaged 7.36. The minimum amount of Ta^{181} recovered from the target surface was 6.1 mg/cm^2, the maximum 12.5 mg/cm^2, and the average 8.7 mg/cm^2. These saturation values expressed in terms of percentage of retention are plotted in Fig. 2.5 as a function of the quantity of Ta^{181} striking the target. These data indicate that essentially all the Ta^{181} striking the target surface was sputtered away with the graphite.

UNCLASSIFIED
ORNL-LR-DWG. 72464

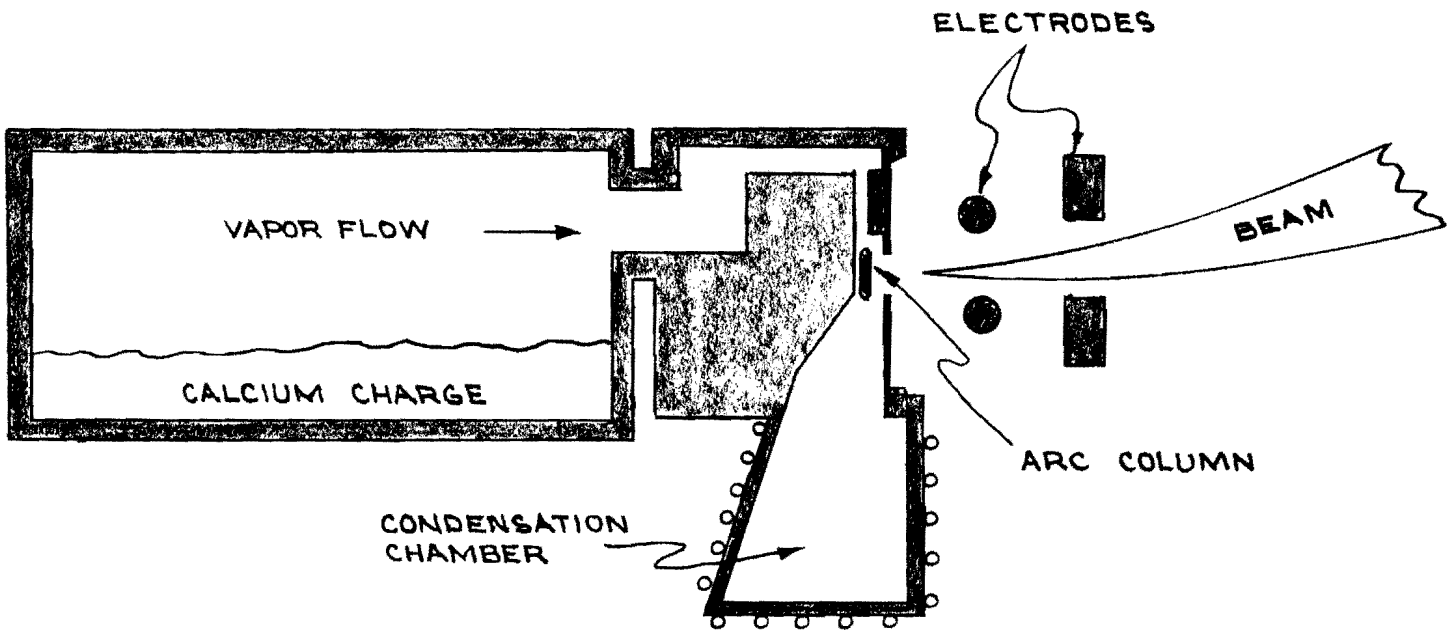

Fig. 2.3. Ion Source with Neutral Vapor Trap

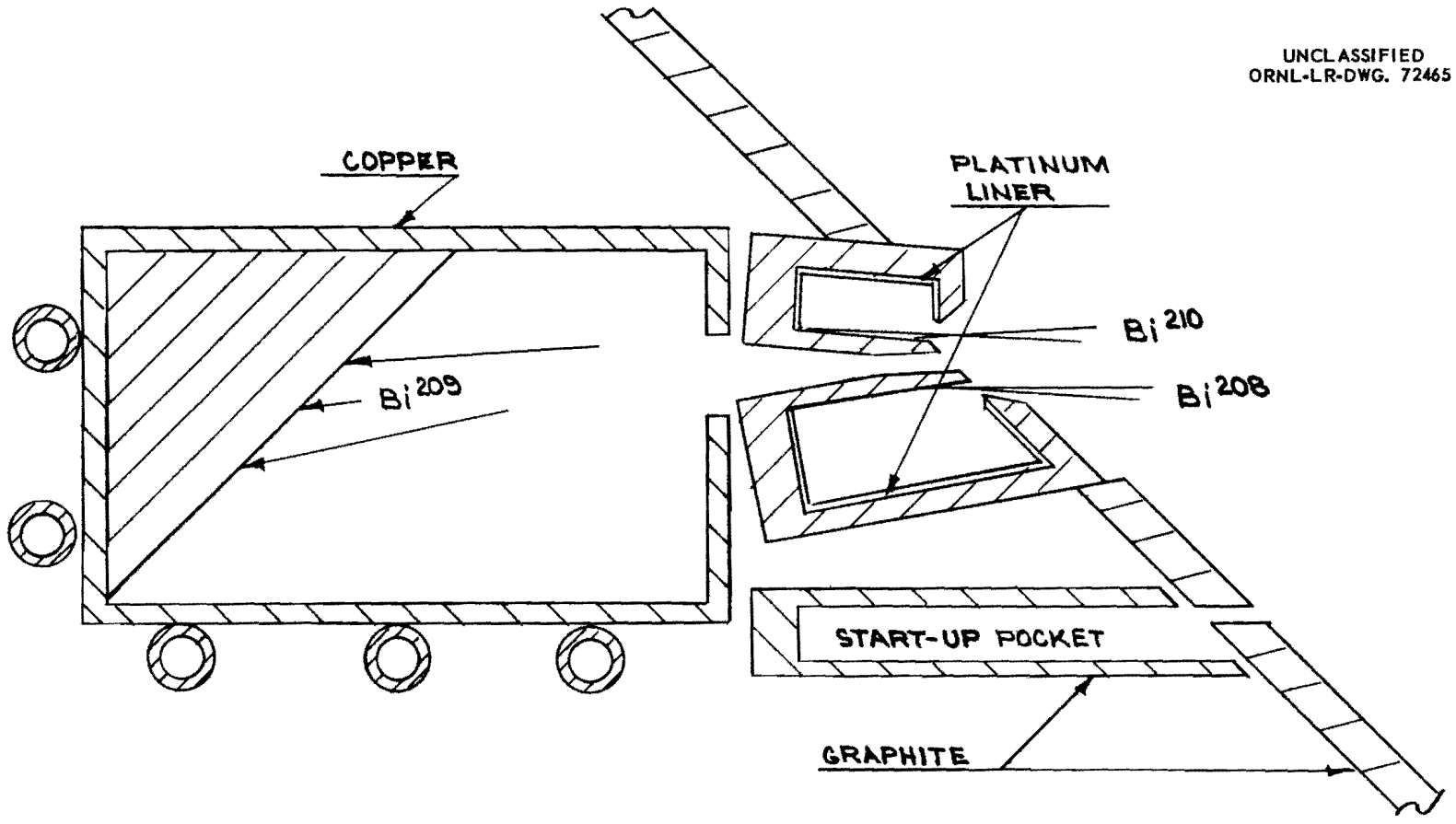

Fig. 2.4. Receiver for Bi^{208}, Bi^{210} Separation

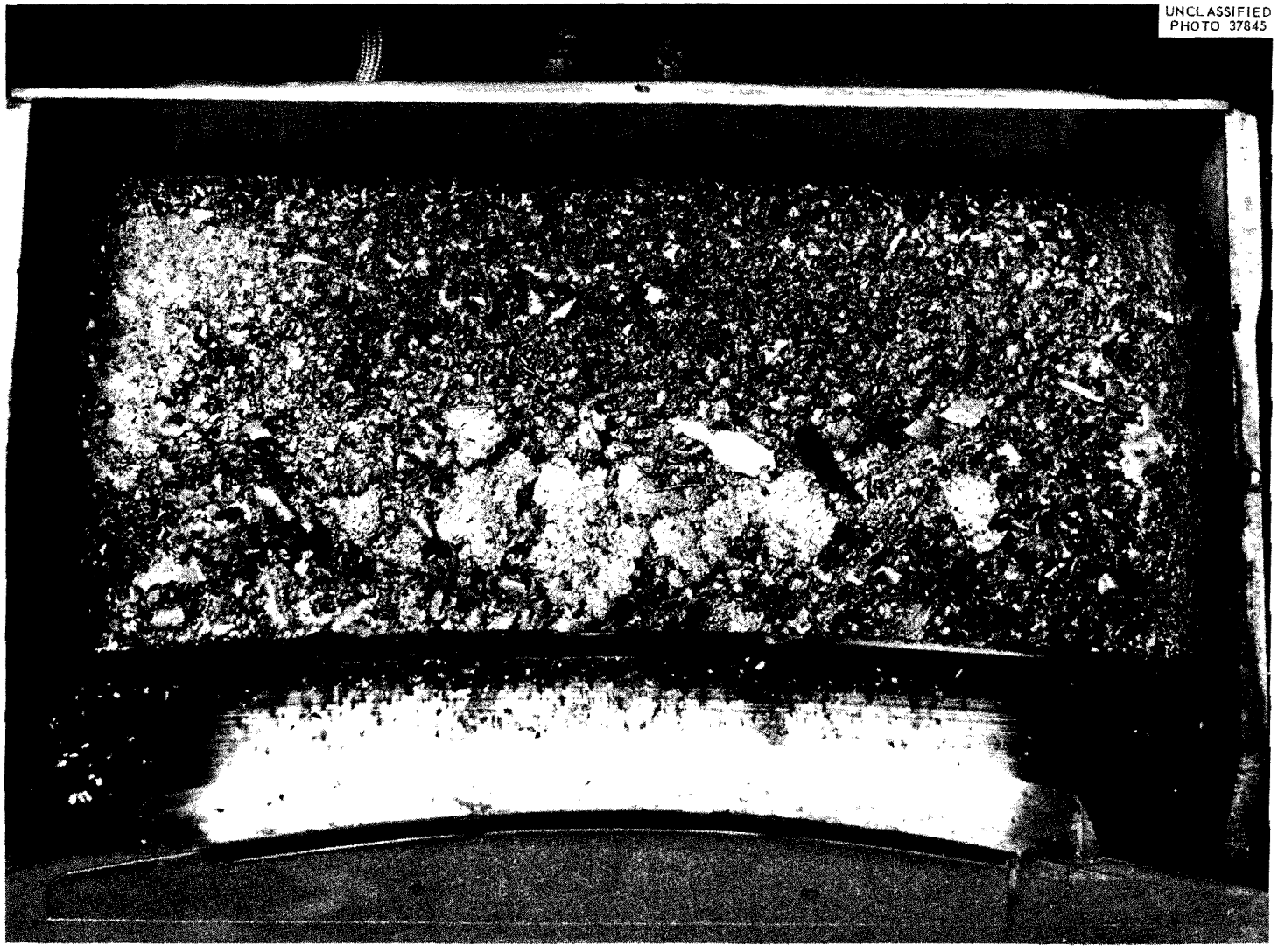

Photo 2.1. Interior of Collector Pocket Containing 150 g of Ta

UNCLASSIFIED
ORNL-LR-DWG. 72466

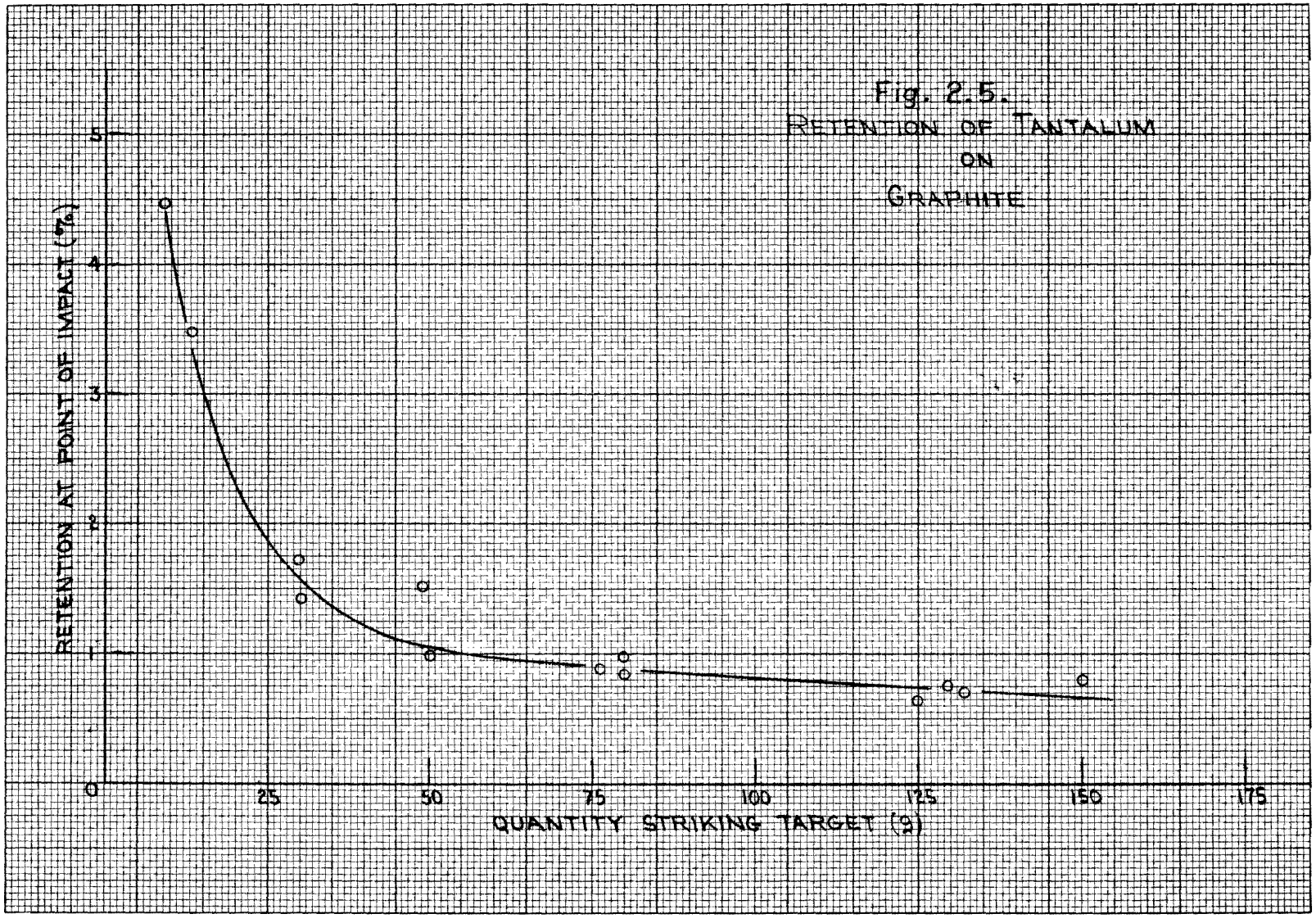

Fig. 2.5.
Retention of Tantalum
on
Graphite

Ion Beam Studies

Faraday cup measuring techniques were continued to determine the retarding potential required to prevent slow secondary ions which leave the beam region from entering the measuring cup. The potential required was equal to the potential height of the plasma. Correlation was observed between the ion current reaching the cup at various tank pressures and the potential height of the plasma as shown by a comparison of Fig. 2.6 and Fig. 2.7. In addition, it was determined that the current resulting from the escape of slow ions from the beam was not uniform; instead, the current is greatest from the area associated with the center of the beam. Experimental data supporting this observation were acquired by moving the Faraday cup in the X - Y plane in a direction perpendicular to the path of the high energy ions. Results are shown in Fig 2.8.

Chemical Development

In preparation for the separation of molybdenum isotopes, several compounds have been investigated to determine the one best suited for use as calutron charge material. Chlorination of metallic molybdenum using $CHCl_3$, CCl_3CF_3, $SOCl_2$, or CCl_4 produced excessive carbon deposits on the molybdenum. A mixture of three parts MoO_3 to one part molybdenum was chlorinated in the calutron and produced the optimum operating and separation conditions.

Methods of converting the inventory form of $Ba(NO_3)_2$ into the oxide were investigated. Barium oxide is known to result from the strong ignition of $Ba(NO_3)_2$ or $Ba(IO_3)_2$. However, the oxide is difficult to obtain in pure form by this method and losses generally occur due to the corrosive action of the fused nitrate and the popping which occurs just prior to its melting. As an alternate approach to BaO formation, the nitrate was converted to the carbonate form which was transferred into a small graphite boat and heated to 1200°C at 2×10^{-4} mm Hg. The graphite container was attacked during this conversion process; however, essentially theoretical yields of pure BaO were obtained reproducibly on six trial runs. Each experimental run was charged with 50 mg of the $BaCO_3$. The resulting 38 mg of BaO was stored in vials greased lightly at the top with Apiazon-N stopcock grease. Since the vials did not show any increase in weight after 96 hr, the suitability of this type of storage container is indicated. Each vial after being opened for 72 hr gained sufficient weight to indicate complete conversion of BaO to $BaCO_3$ through CO_2 pickup.

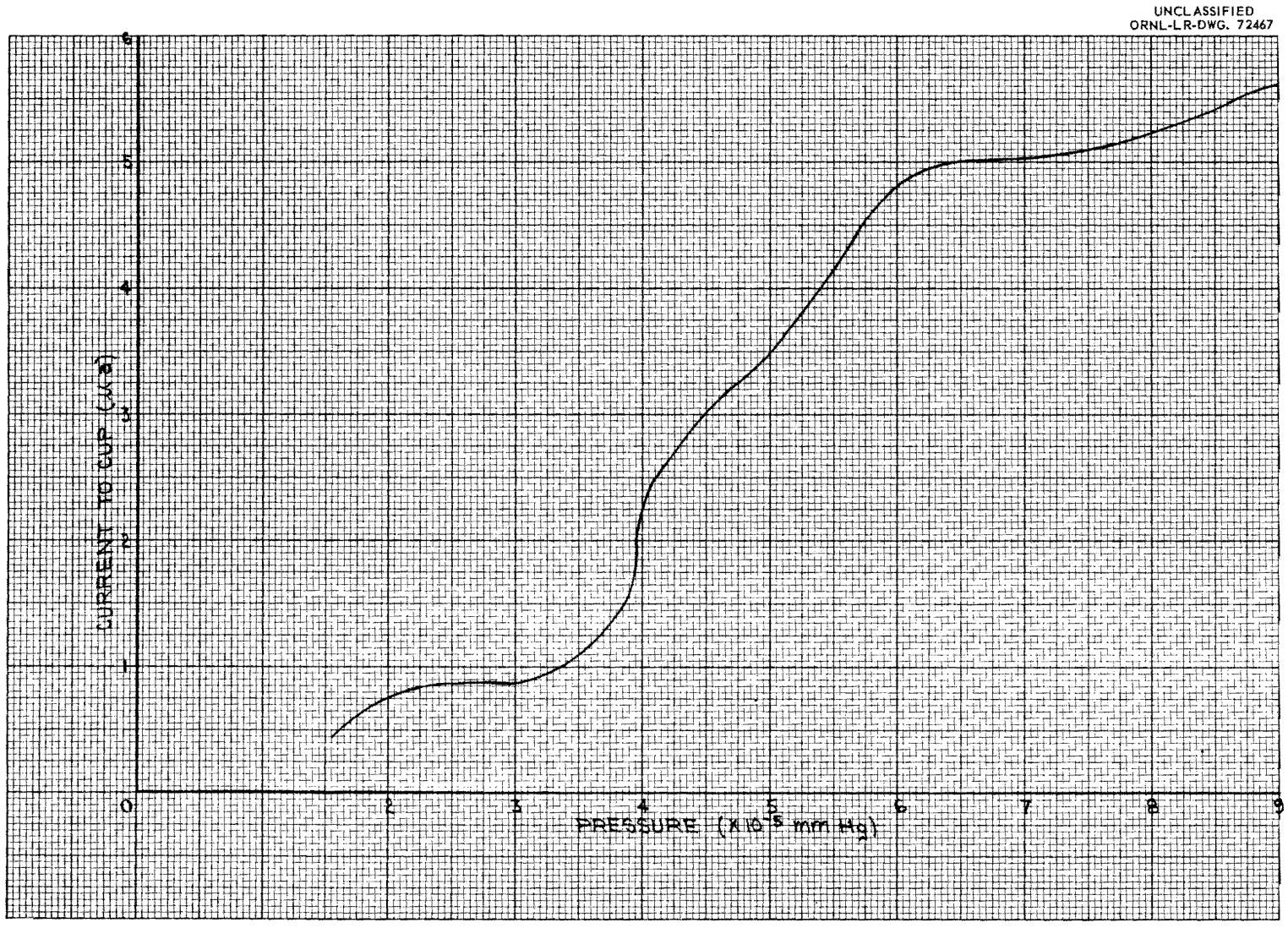

Fig. 2.6. Slow Ion Current Loss from 40 ma Argon Ion Beam with Variation in Tank Pressure

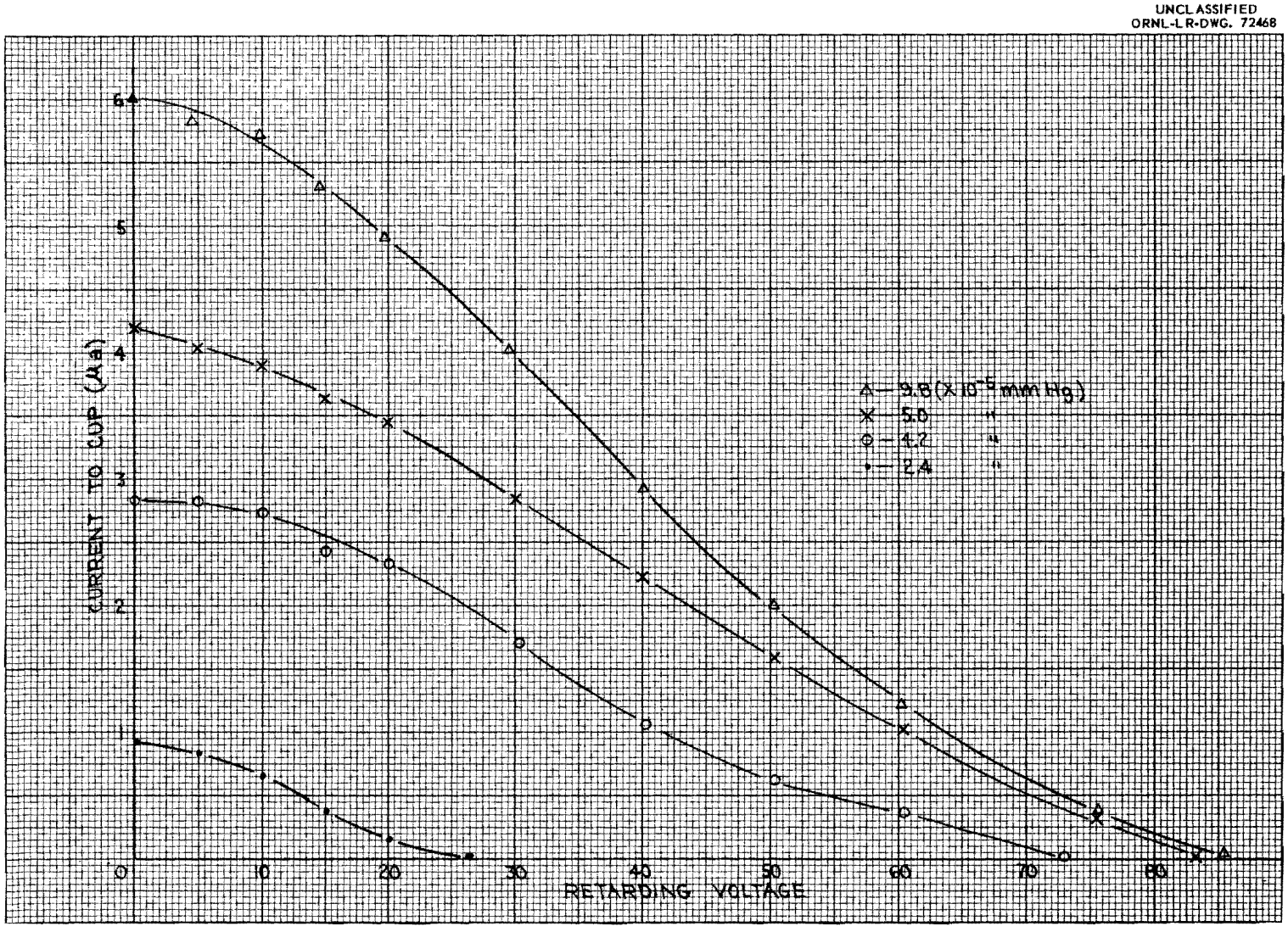

Fig. 2.7. Effect of Retarding Potential on Ions Leaving 41 ma Argon Beam at Specified Pressure

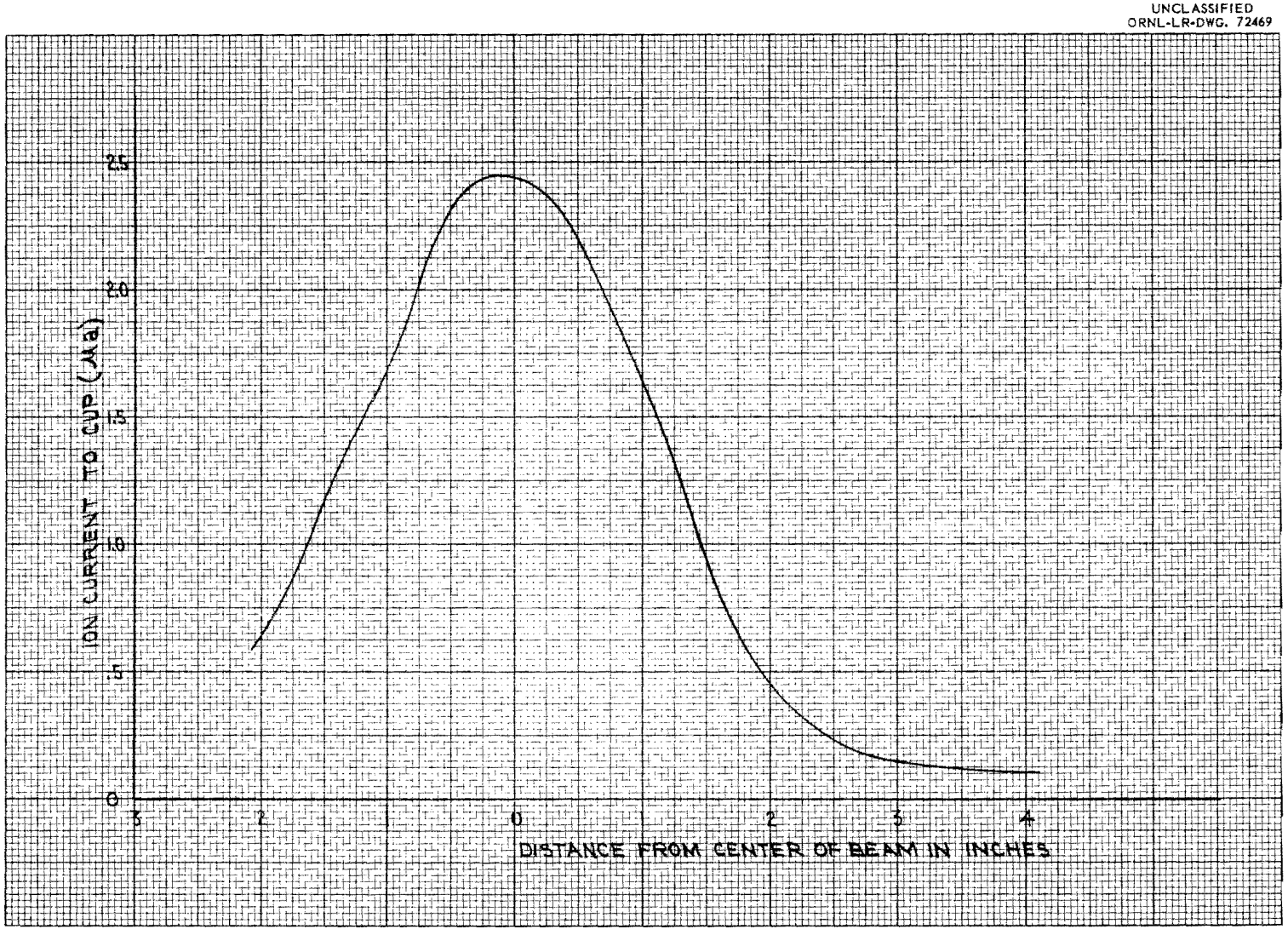

Fig. 2.8. Slow Ion Current Loss from 41 ma Argon Ion Beam at Various Positions Relative to Beam Center

3. RADIOACTIVE SOURCE DEVELOPMENT

Precipitation of Cesium Tetraphenyl Boron

In the January report satisfactory conditions for the precipitation of cesium as $CsB\phi_4$ on an SiO_2 slurry were reported. However, unless vigorous stirring was used, the 240-mesh SiO_2 (with fines removed) tended to settle to the bottom of the precipitator. Therefore, a study was begun to find the particle size range of SiO_2 which would give a good filtration rate but would not require such vigorous stirring.

The 240-mesh silica, as obtained from the supplier, was washed so as to remove only the particles of colloidal size. After the silica was dried, it was screened to remove particles larger than 250-mesh. The filtration rate of the precipitate obtained from the screened fraction is better than that obtained with larger particle sizes. The $CsB\phi_4$ precipitate formed around the small silica particles, and a more uniform mixture resulted.

An operating procedure was prepared from preliminary procedures written. Using this operating procedure at FPDL, a 4900-curie Cs^{137} precipitation was made. The solution was 0.5 M in NaCl and 0.2 N in acetic acid. The precipitation and digestion were carried out for 20 min at 82°C. The solution was cooled to 30°C and filtered through two filters in series. The first filter, which leaked, was about one-third full and the second filter was nearly full. The top part of the precipitate in both filters was light $CsB\phi_4$.

After calcinating, the powder weighed 239 g compared with a calculated 315 g. Only a very small amount of Cs^{137} has been found in the furnace condenser system and the filtrate from the precipitation contained <25 curies of Cs^{137}. The poor material balance may be due to the adherence of $CsB\phi_4$ to the walls of the precipitator.

The analyses of the 239 g of powder showed it to contain 13.5 curies of Cs^{137} per gram. This would account for over 3200 curies of Cs^{137}. From this it may be calculated that the powder contains 39.6% cesium by weight.

Fission Product Chemistry

Cesium Recovery

A study was made to find a cesium compound which can be prepared directly from cesium alum and which can also be calcined to Cs_2CO_3 or to Cs_2O either for use in making cesium glasses or for conversion to CsCl. One compound which meets these requirements is cesium acid oxalate. Cesium acid oxalate crystallizes as a dense crystalline material (1.1 g/ml) and contains 0.33 g of cesium per gram of solid. Whereas the solubility of cesium acid oxalate is ~5 g/liter in 1 M oxalic acid, the addition of 50% alcohol reduces the

solubility to ~1.5 g/liter. The crystalline material can be air-dried or dried at 110°C, calcined, and dissolved in HCl to make CsCl; or it can be mixed with SiO_2, calcined, and fused directly to a cesium glass.

Preliminary work with CsCl as a source of the cesium showed that >98% of the cesium can be precipitated in one step by the addition of oxalic acid in the presence of ethanol. The balance can be scavenged by coprecipitation with ammonium oxalate.

Recovery of the cesium from $Cs_2Al_2(SO_4)_4 \cdot 24H_2O$ involves the addition of sufficient oxalic acid to complex the Al^{3+}, precipitate the Cs^+, and leave .5 M oxalic acid in solution. Since only about 75% of the cesium is recovered in this step, a second precipitation using ammonium as a carrier is necessary. In the combined steps, <4% of the original aluminum is precipitated with the cesium. The almuinum impurity can be reduced to <0.1% by recrystallization followed by an ammonium oxalate scavenge.

For the preparation of CsCl, the cesium acid oxalate is calcined at 600-700°C, dissolved in water, and filtered. The carbonate is then converted to CsCl with HCl.

In the preparation of glass, the cesium acid oxalate is mixed with the other glass-forming constituents, calcined, and then melted. One advantage of this method is that any glass system can be used with cesium acid oxalate as the cesium source, whereas only borate glasses can be made by the present method of precipitating cesium tetraphenyl boron. Another advantage is that much larger quantities of Cs^+ can be precipitated per batch. In the present system, using a 2.3-liter filter, only 6 kilocuries of cesium can be precipitated because the bulk of the precipitate fills the thimble. With cesium acid oxalate, 30 kilocuries could be precipitated at one time using the same system.

Radiographs Using Bremsstrahlung Sources

As a part of the development of Bremsstrahlung sources, several radiographs have been made using a commercial type x-ray film. These radiographs were made using a 40-curie Pm^{147} source at varying distances from the object to be radiographed. Two of these radiographs are shown (Photos 3.1 and 3.2).

Americium-241

Ten Am-Be neutron sources were fabricated by using a blended mixture of 1 g of Am^{241} oxide and 10 g of beryllium metal powder in each source. This mixture was compressed with 50,000 psi to a pellet which measured 1 in. in diameter and 0.9 in. in length. The resulting pellet was triply encapsulated in 347 stainless steel. Total wall thickness was 0.055 in. The intermediate and outer capsules were sealed by fusion welding, leak tested, and prepared for shipment. Smear tests made prior to shipment disclosed no contamination.

UNCLASSIFIED
PHOTO 58545

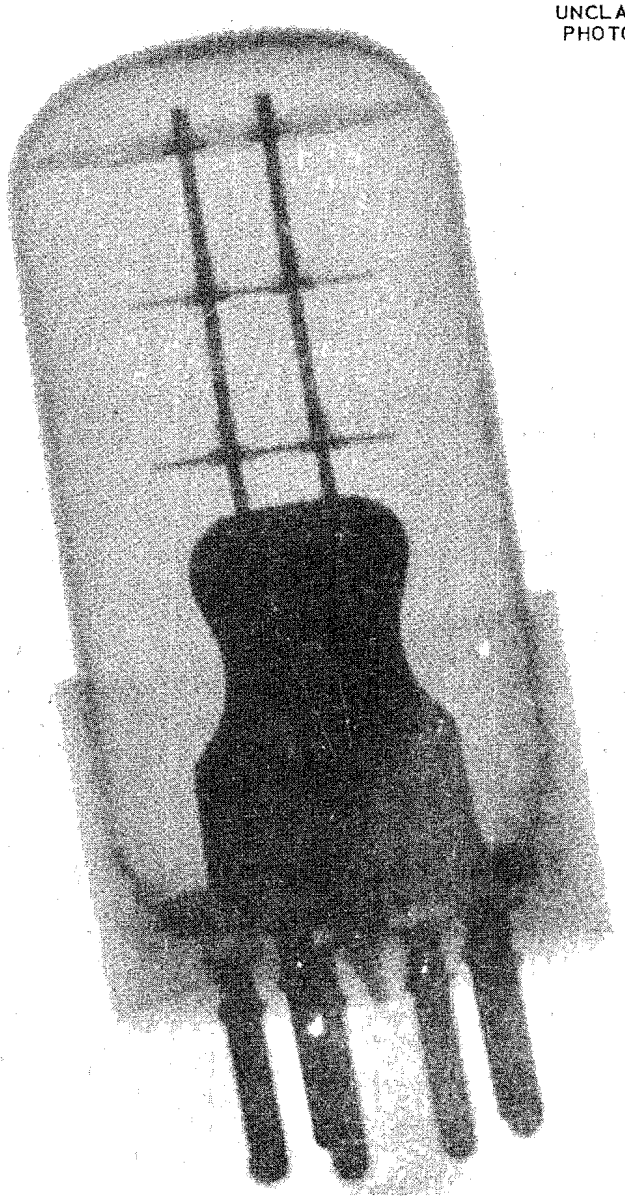

Photo 3.1. Radiograph Using Pm^{147} Source (38 kev x ray) Type M Eastman Film Exposed 24 min - 200 mr/hr

UNCLASSIFIED
PHOTO 58546

Photo 3.2. Radiograph Using Pm^{147} Source Exposed 20 min - 2 r/hr

4. TARGETS

Target Fabrication

Boron-10 targets on titanium backings were fabricated by electron beam evaporation. The preparation of self-supported targets of beryllium and boron with a thickness of 200 $\mu g/cm^2$ is being investigated. Vanadium and scandium were successfully rolled to 1 mg/cm^2; targets of these two elements had not previously been fabricated. A 16-in.-diam target of Fe^{57} was prepared by gluing to Mylar backing, over 50 pieces of iron rolled to a thickness of 1.5 mg/cm^2. Technetium-99 has been evaporated to produce films having a thickness of 1 mg/cm^2 or less on backings of stainless steel, platinum, and tantalum.

Targets prepared in February are listed in Table 4.1.

Table 4.1. Targets Prepared in February

Isotope	Number	Thickness	Method
Fe^{57}	3	2 mg/cm^2	Rolling
Fe^{57}	2	4.5 mg/cm^2	Rolling
Fe^{57}	1	23 mg/cm^2	Rolling
Fe^{57}	1*	1.5 mg/cm^2	Rolling
Ni^{60}	2	5 mg/cm^2	Rolling
Ti^{48}	2	1 mg/cm^2	Rolling
C^{12} on Ta	3	30 g/cm^2	Glow Discharge
C^{14} on 30 μin. Ni	1	20 g/cm^2	Glow Discharge
C^{14} on 50 μin. Ni.	1	50 g/cm^2	Glow Discharge
Ni^{58}	2	5 g/cm^2	Rolling
Ni^{58}	1	22 mg/cm^2	Rolling
Zr^{92}	1	26 mg/cm^2	Rolling
Zr^{90}	1	26 mg/cm^2	Rolling
Zr^{91}	1	26 mg/cm^2	Rolling
Zr^{94}	1	26 mg/cm^2	Rolling
Sn^{124}	1	30 mils	Rolling
Co^{59}	1	3 mg/cm^2	Rolling
B^{10} on Ti	52	300 $\mu g/cm^2$ each side	Electron beam evaporation
B^{11} on Ta	2	200 $\mu g/cm^2$	Electron beam evaporation
Ta	2	2 mg/cm^2	Rolling
Pb^{208}	1	5 mils	Rolling
Li^6	100	2-$\frac{1}{2}$" D, 2 mm thick	Melting and rolling
Li^6	48	3" x 8", 2 mm thick	Melting and rolling
Pb^{207}	1	2" D	Pressing

*16" target (over 50 pieces)

(Continued)

Isotope	Number	Thickness	Method
Pb^{207}	1	2" D	Pressing
Ni^{58}	1	300 μg/cm^2	Rolling
Ni^{60}	1	300 μg/cm^2	Rolling
Ni^{58}	1	5 mg/cm^2	Rolling
Ni^{58}	1	1 mg/cm^2	Rolling
Ni^{60}	1	5 mg/cm^2	Rolling
Zn^{68}	1	1 mg/cm^2	Rolling
Zr^{92}	1	1 mg/cm^2	Rolling
Zr^{94}	1	1 mg/cm^2	Rolling
H^3Zr	1	1 mg/cm^2	
H^3Zr	3	500 μg/cm^2	
H^3Zr (on W)	8	500 μg/cm^2	

Target Development

Ion deceleration was chosen as a possible method for use in depositing B^{10} on tungsten target substrates. The rotational target device was altered to accommodate twelve tungsten discs, each 3/4 in. in diameter and 0.030 in. thick. The target discs were masked to 5/8 in. diameter and arranged as shown in Fig. 4.1. The assembly was rotated so that each individual target remained in the ion beam for a specified period of time.

Twenty-four target substrates were bombarded in this manner. Each target was in the beam for a period of 3 hr during which time the target area was struck by a 1-ma beam decelerated to 250 v. Accurate positioning of the beam was accomplished by varying the decelerating voltage to produce the maximum current on a probe located adjacent to each target. The weight of material deposited on the target surface varied from 230 μg to 555 μg and averaged 387 μg. All targets appeared, by visual inspection, to have been coated with a reasonably uniform, adherent deposit which is being subjected to chemical and mass analysis.

5. THERMAL DIFFUSION

Carbon-13 Cascade

The intercolumn flow control valve system and the intercolumn piping of the C^{13} enrichment cascade were completed and leak testing of the cascade begun. Work is continuing on the electrical control and the product recovery systems.

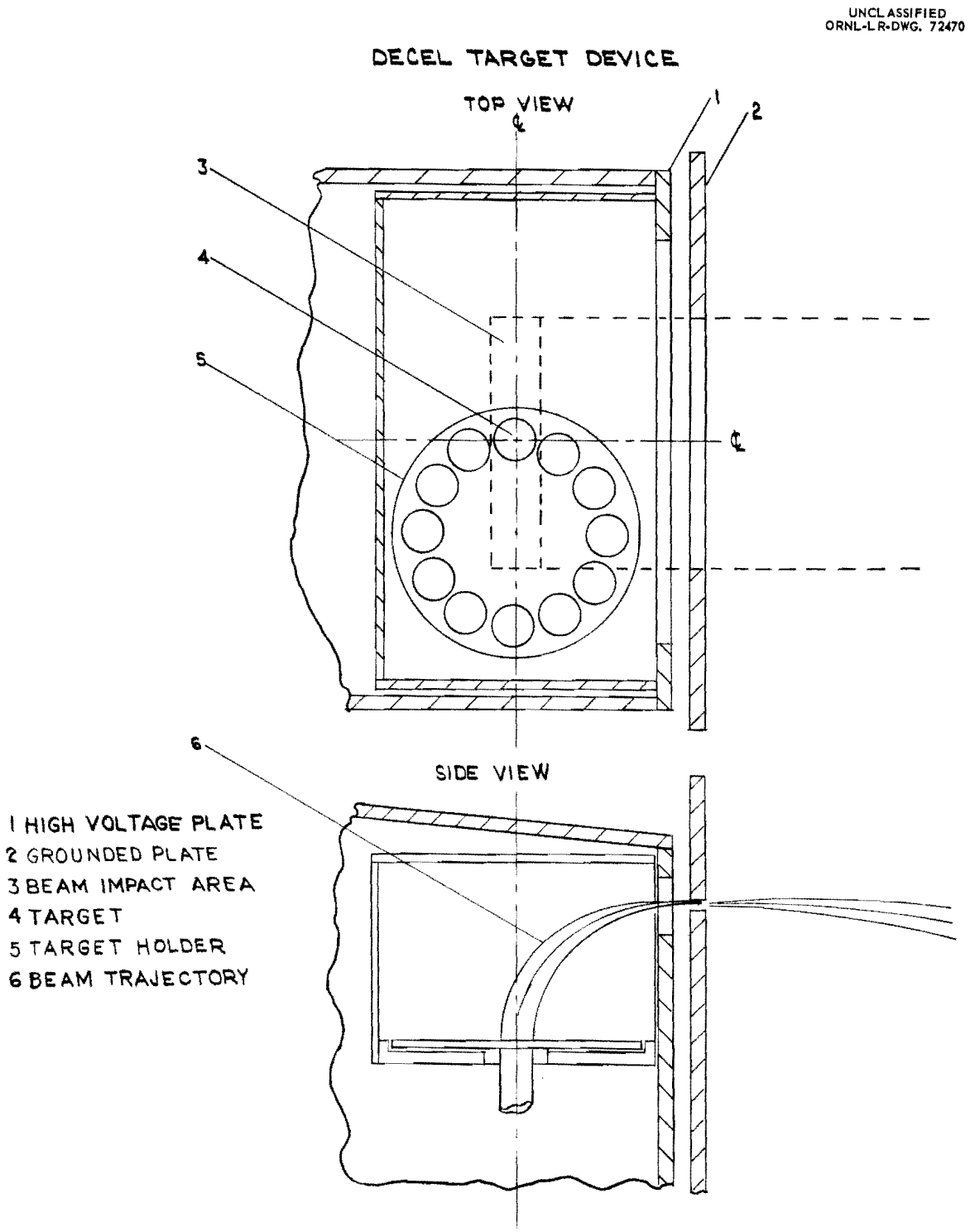

Fig. 4.1. Decel Target Device

DISTRIBUTION

1. P. S. Baker
2. E. E. Beauchamp
3. G. E. Boyd
4. J. C. Bresee
5. Sylvia L. Brooks
6. K. B. Brown
7. T. A. Butler
8. F. N. Case
9. J. W. Cleland
10. J. A. Cox
11. D. J. Crouse
12. F. L. Culler
13. J. H. Gillette
14. W. D. Harman
15. C. P. Keim
16. E. H. Kobisk
17. C. E. Lamb
18. E. Lamb
19. L. Landau
20-21. L. O. Love
22. R. B. Martin, AEC
23. M. Murray
24. J. J. Pinajian
25. M. E. Ramsey
26. R. A. Robinson
27. H. M. Roth, AEC
28. A. F. Rupp
29. H. E. Seagren
30. M. J. Skinner
31. H. F. Stringfield
32. J. A. Swartout
33. A. M. Weinberg
34. Laboratory Records - RC
35-36. Central Research Library
37-39. Laboratory Records
40. Document Reference Section

EXTERNAL DISTRIBUTION

41. P. C. Aebersold, Div. of Isotopes Development, AEC, Washington, D. C.
42. A. Berman, Div. of Isotopes Development, AEC, Washington, D. C.
43. H. D. Bruner, Div. of Biology and Medicine, AEC, Washington, D. C.
44. T. R. Jones, Div. of Research, AEC, Washington, D. C.
45. G. A. Kolstad, Div. of Research, AEC, Washington, D. C.
46. J. E. Machurek, Div. of Isotopes Development, AEC, Washington, D. C.
47. F. K. Pittman, Div. of Reactor Development, AEC, Washington, D. C.
48. L. P. Bupp, General Electric Co., HAPO, Richland, Washington
49. B. F. Judson, General Electric Co., HAPO, Richland, Washington
50. J. T. Cristy, HOO, AEC, Richland, Washington
51. Isaac A. Hobbs, SROO, AEC, Aiken, S. C.
52. V. R. Thayer, Atomic Energy Division, E. I. DuPont, Wilmington, Del.
53. J. William Morris, SRL, E. I. DuPont, Aiken, S. C.
54. J. W. Irvine, 6-426, MIT, Cambridge 39, Mass.
55. R. N. Goslin, Oglethorpe University, Atlanta, Georgia
56-70. DTIE, AEC
71. Research and Development, ORO