ORNL
MASTER COPY

OAK RIDGE NATIONAL LABORATORY

operated by

UNION CARBIDE CORPORATION

for the

U.S. ATOMIC ENERGY COMMISSION

ORNL-TM-176

COPY NO. - 4

DATE -

NOTICE

This document contains information of a preliminary nature and was prepared primarily for internal use at the Oak Ridge National Laboratory. It is subject to revision or correction and therefore does not represent a final report. The information is not to be abstracted, reprinted or otherwise given public dissemination without the approval of the ORNL patent branch, Legal and Information Control Department.

Comparison of Fuel Assembly Tests Prognosticated for the EGCR Loops

Since the EGCR experimental loops need to be designed to accommodate tests of advanced types of fuel assemblies, a cursory comparison has been made of various fuel designs that have been proposed for future gas cooled reactors in terms of limiting design performance and operating conditions relative to what can be achieved in the EGCR experimental facilities. In the reactor concepts, metal clad assemblies are considered limited by the maximum allowable clad surface temperature, and unclad assemblies are limited either by thermal stress or problems in fuel loading. Three types of fuel assemblies have been considered: (a) multi-rod clusters clad with either stainless steel or beryllium, (b) parallel plate arrays of unclad graphite-UC or $BeO-UO_2$ mixtures, and (c) unclad $BeO-UO_2$ tubes placed within bored BeO hexagonal prisms (hex-block configuration). The graphite moderated fuels were considered to be cooled by helium or hydrogen and the BeO moderated fuels by carbon dioxide or hydrogen. Operating pressure levels in the reactor concepts were calculated from the assumption that the pumping power required to circulate the gas through the reactor core would not exceed two percent of the total heat generated.

An immediately obvious difficulty in attempting to simulate reactor service conditions in the EGCR loops for the high performance assemblies is the inability to achieve comparable power densities, at least without resorting to unreasonably high fuel loading. Consequently, the test conditions cannot match the design requirements in all respects, and one or more operating conditions must be relaxed for the EGCR experiment. Nuclear characteristics of the EGCR and difficulties inherent in loop design have led to assignment of the following approximate performance limitations for the experimental loops:[1]

[1] "Criteria for EGCR Loops" - F. H. Neill, Nov. 25, 1959, Letter to Distribution.

(a) Maximum heat generation per loop is 1.5 Mw in a 15 foot assembly, or 100 kw/ft average.

(b) Maximum local heat generation is 150 kw/ft.

(c) Maximum inlet gas temperature is 950°F.

(d) Maximum outlet gas temperature leaving reactor zone is 1050°F, which can be achieved by attemperation with inlet gas, if higher test temperatures are required.

(e) There is no provision for regenerative heat exchange between inlet and outlet gas streams.

(f) The capacity of the heat exchanger (heat sink) in the external part of the loop is limited to 1.5 Mw at 500 psia gas pressure, with 1050°F gas inlet and 600°F gas outlet temperature. The capacity is reduced in proportion to gas pressure at lower pressure levels (constant volume flow of gas), and in proportion to the average temperature difference across the tubes for lower outlet temperatures.

(g) The loop blower system is sized to deliver 9200 lb/hr He or 41,000 lb/hr CO_2 at 500 psia and 600°F, which is the flow equivalent to 1.5 Mw at a ΔT of 450°F.[2] For this study the system was assumed capable of handling any gas at a maximum flow of $\frac{4320}{C_p M}$ cfm. Temperature deviations from 600°F were neglected.

(h) Maximum loop operating pressure is 1000 psia.

From the concepts of reactor performance, corresponding experiments were calculated for the EGCR loops in which the reactor design operating conditions were adhered to wherever possible. Where compromises had to be made the power

---

[2] Data from C. L. Segaser.

density, gas flow, gas pressure and gas temperatures were allowed to change. The one reactor condition which is unchanged is maximum fuel surface temperature.

The question arises as to the possibility of testing only a small length of the assembly at the maximum service conditions, thus holding the total heat generation well within the capabilities of the heat exchanger. Experiments of this kind can, of course, be done, but the conditions will be even further from design because either the inlet gas will be too cold to permit reaching the design surface temperature (as appreciable preheating outside of the reactor is not practical) or the gas flow is reduced excessively to allow very high film temperature drops. It is believed that the gas flow should approach design as closely as possible within the limits of total heat generation available in assemblies of maximum length, thus using the lower part of the fuel assembly as its own gas preheater.

Multi-rod Clusters

Eleven concepts for rod clusters and the corresponding EGCR experimental conditions are shown in Table I. The method of calculating the reactor conditions from a given fuel rod diameter and cluster size, and reactor temperatures, is that developed by Epel,[3] using essentially an energy balance, the Dittus-Boelter equation and the Blasius equation for friction pressure drop.

The first four cases represent actual reactor designs which are included for comparison. The last seven cases represent advances in performance over the first four, largely in the direction of increasing number of (thinner) rods in the cluster and higher gas pressures. Assemblies for all cases except numbers 6, 9, and 10 can be tested in the EGCR loops without compromise of reactor conditions (except channel length in some instances). Cases 6, 9,

[3] "A Parametric Study of a Gas Cooled Reactor" - L. G. Epel, ORNL CF-59-7-88, July 24, 1959.

and 10 (and also case 8) are perhaps indicative of the practical upper limit to clad fuel element performance in that the rod cluster is complex and hence expensive, there is a greater ratio of cladding to fuel (decreased neutron efficiency) and gas pressures are high. These three cases cannot be tested under full reactor conditions in the EGCR loops because the design heat generation exceeds 1.5 Mw. However, the design maximum surface temperature is achieved by lowering the mass flow and readjusting gas inlet and outlet temperatures as shown. In all cases except 9 and 10 the minimum loop pressure corresponds to the reactor service pressure. The exceedingly high reactor pressure of cases 9 and 10 need not be used in the experiment unless desired. At reduced heat rates there is an advantage in using the lowest permissible pressure in that the gas velocity past the assembly is then maximum and the assembly is subjected to the severest dynamic conditions. The lower external pressure on the cladding, however, can exaggerate the deleterious effect of fission gas build-up on heat transfer from fuel to cladding.

Parallel Plate Assemblies

Six concepts for parallel plate assemblies in square array were calculated, along with the corresponding EGCR experimental conditions, and are shown in Table II. Since surface temperature is not a serious limitation for unclad ceramic-type elements the heating rate was considered to be limited only by the maximum allowable thermal stress in the fuel plates or by probable limits of practical fuel loading. The method of calculating reactor conditions is essentially that of Carlsmith,[4] with the exception that a chopped cosine axial power distribution of 1.32 maximum-to-average was assumed instead of a flat distribution. For a given combination of fuel composition and coolant, and with the fuel power density limited only by thermal stress, the plate spacing is determined entirely by the plate thickness, the maximum temperature drop through the gas film and the average linear rate of gas temperature rise. This relationship is shown in Fig. 1 for both graphite-helium and $BeO-CO_2$

[4] "Power Density in Ceramic-Fuel Element Gas-Cooled Reactors", R. S. Carlsmith, ORNL CF-59-8-87, August 14, 1959.

systems, for selected gas film temperature drops and plate thicknesses, and the equation on which the plot is based is derived in the appendix. It was assumed, of course, that the mechanical and thermal properties of the fuel-moderator mixture were the same as the pure moderator.

In all of the graphite moderated cases the heating rates exceed the 1.5 Mw EGCR maximum by appreciable factors. Consequently, the EGCR test conditions deviate considerably from the reactor concept. Attemperation of the outlet gas is obviously required in all cases since very high outlet temperatures are postulated, and mass flows are much below design values. The maximum surface temperature is maintained, however, without unreasonable deviation in the other conditions.

The BeO moderated cases shown can be matched much closer in temperatures and gas flows than the graphite cases in the EGCR loops because of the comparatively low limit on fuel element power density calculated by Carlsmith. If the BeO will relieve the thermal stress through creep,[5] the limiting power density relationship to plate or tube thickness used in this study could be increased for the reactor concepts.

The power outputs of these assemblies could be reduced materially by assuming a smaller fuel cross-section, thus permitting the overall EGCR experimental conditions to approach closer to the reactor concept. However there is a limit to size of cross-section below which the data cannot be reliably extrapolated. A two-inch square array was chosen arbitrarily, partly to illustrate the nature and relationships of the deviations of the experimental conditions from the reactor concept and partly because the plate width is probably as close to the plate spacing and thickness as can be used without introducing excessive extraneous effects into the experiment. Also, it appears that a two-inch square assembly can be fitted into the smaller EGCR loops without much difficulty.

---

[5]Suggestion by A. P. Fraas.

Hex-block Assemblies

The hex-block assembly consists of a cylindrical fuel-bearing tube centrally placed inside a bored hexagonal prism, the assembly having the cross-section shown below.

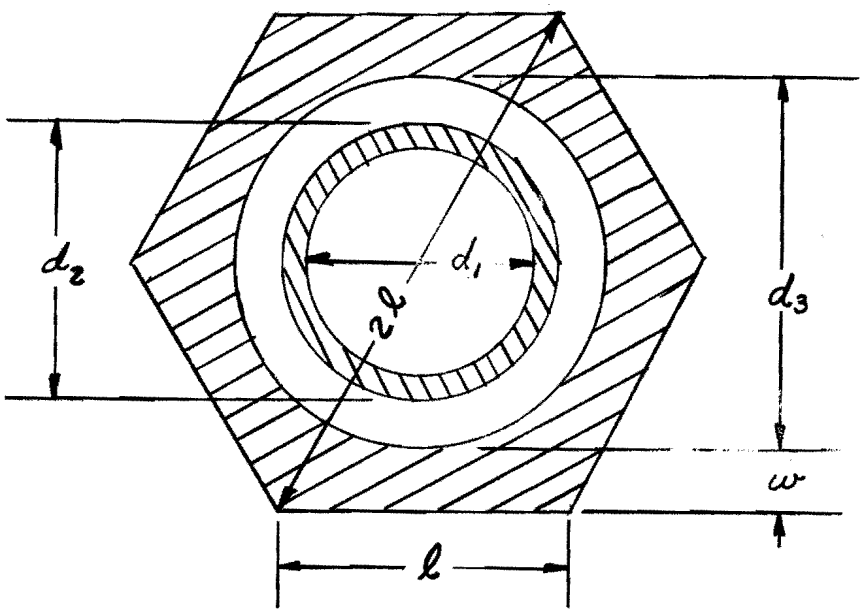

This configuration differs from the other two considered in that part of the moderator is separate from the fuel and therefore need not be reprocessed. Also, in the EGCR experiments the hex-block itself provides the separator for the heated circulating gas and the bypass stream required for attemperation of the gas leaving the fuel tube. The design appears to be particularly attractive for BeO moderated reactors.

Six concepts for hex-block assemblies are presented in Table III, along with the corresponding EGCR experimental conditions. As with the parallel plate assemblies, the heating rate limit is determined by the allowable thermal

stress (tensile) in the outer wall of the fuel tube.[4] A chopped cosine axial power distribution of 1.32 maximum-to-average was used except in cases 2 and 3 in which a flat distribution was assumed. The power densities and total channel powers are so low that the experimental conditions can be simulated fairly closely in the EGCR loops. Since an active channel length in the reactor concept of 10 ft was chosen, rather than 15 ft, the 10-ft test assembly must be positioned in the EGCR loop about 2.5 ft above the bottom, corresponding to a 600°F gas temperature, instead of the design inlet temperature of 500°F, to achieve the design maximum surface temperature in the upper fourth of the assembly.

Fuel Loading

As already indicated, the fuel loading must be considerably higher for EGCR test conditions, in most cases, than is required in the design concept. Consequently the nuclear calculations were made only for experiments conducted in the small EGCR loops, where the flux is highest. The fuel loading index for these loops is about 20 g U-235/cm to produce 1.5 Mw in the loop.[6] The estimates of moderator-to-fuel ratios and weight percent fuel for unclad assemblies are very rough because no allowance was made for moderator displacement even though the fuel concentrations are very high.

The severest condition in the multi-rod clusters considered appears in cases 6, 9, and 10 (Table I) in which the fuel must contain about 15 percent U-235. The enrichments for cases 2 and 4, for example, would have to be about five percent and two percent U-235 respectively. In cases 6, 9, and 10 the neutron flux depression in the assembly would be extreme, resulting in excessive heating of the peripheral rods and subnormal heating of the center rods. There would probably be a steep lateral temperature gradient within the rods near the periphery of the assembly, resulting in bowing and hot spot formation.

---

[6] Nuclear considerations by A. M. Perry.

In this sense, the experiment would be a very conservative test if the data can be analyzed.

The severest parallel-plate case is number 1 (Table II) because the full 1.5 Mw heat generation is called for with the most heterogeneous assembly (only 1.74 equivalent plates) and greatest void volume. The fuel loading is about 77 w/o UC. The mechanical and thermal properties of such rich compositions are not known, but one would expect the properties to be considerably less favorable than those of graphite (which were used in this study). Case 3, the next severest graphite assembly, requires a C/U ratio of about 11:1 (69 w/o UC) and case 2 requires a C/U of about 20:1 (57 w/o UC). The BeO cases 4 and 5 require a Be/U ratio of about 10:1 (54 percent UO_2). The physical properties of such compositions have not yet been fully determined.

The hex-block assemblies, like the parallel plates, may not have practical fuel loadings except for case 5 which has a favorably low loop heat rate.

APPENDIX

Derivation of Parallel Plate Spacing Equation

Nomenclature

n = number of plates

x_1 = plate width, ft

x_2 = plate spacing, ft

L = plate length, ft

a = heat transfer area per foot of plate = $2x_1$, ft^2/ft

ΔT_m = max. gas film temp. drop, ^oF

T_m = max. gas temp. rise, ^oF

t = plate thickness, ft

r = axial peak-to-average power ratio

k = gas thermal conductivity, $Btu/hr \cdot ft^2 \cdot {}^oF/ft$

h = gas heat transfer coefficient, $Btu/hr \cdot {}^oF \cdot ft^2$

q_m = max. plate heat rate, $Btu/hr \cdot ft$

Pr = Prandtl number

$F = \dfrac{q_m L n}{\Delta T_m}$

B = fuel power density, $Btu/hr \cdot ft^3$

Y = coefficient relating B and t, $Btu/hr \cdot ft$

- - - - - - - - - - -

Epel's equation 20 can be generalized for gases and for axial power distribution, and modified from rod cluster diameters to parallel plates using Carlsmith's form of the Dittus-Boelter and friction factor equations,[7] to give:

$$\frac{F^{0.8}}{h} \; \frac{(2.00 \times 10^{-2})}{r^{0.8}} = \frac{Pr^{0.4}}{k^{0.2}} \, x_2 \, (n \, x_1)^{0.8} \qquad (1)$$

Substituting

$$F = \frac{q_m \, L \, n}{\delta \, T_m},$$

$$h = \frac{q_m}{a \, \Delta \, T_m},$$

and

$$x_1 = \frac{a}{2}$$

$$x_2 = \frac{3.48 \times 10^{-2}}{r^{0.8}} \left(\frac{k^{0.2}}{Pr^{0.4}}\right) \left(\frac{q_m}{a}\right)^{-0.2} \Delta T_m \left(\frac{\delta T_m}{L}\right)^{-0.8} \qquad (2)$$

where

$$\left.\begin{aligned} B &= Y/t^2, \\ Y &= 3.23 \times 10^4 \text{ for graphite} \\ Y &= 3.00 \times 10^3 \text{ for BeO} \end{aligned}\right] \text{Ref. (4)}$$

---

[7] Ref. 2, page 8.
Ref. 3, page 5.

and

$$\frac{q_m}{a} = \frac{Bt}{2}$$

for equal heat removal rates from each side of the plate. Therefore:

$$x_2 = \frac{3.99 \times 10^{-2}}{r^{0.8}} \left(\frac{k^{0.2}}{Pr^{0.4}}\right) \left(\frac{Y}{t}\right)^{-0.2} \Delta T_m \left(\frac{\delta T_m}{L}\right)^{-0.8} \qquad (3)$$

The following values were used in plotting the curves of Fig. 1:

He	r = 1.32	CO_2
T = 700°F		900°F
k = 0.145		0.034
Pr = 0.72		0.61

The curves, of course, are based on obtaining the maximum fuel power density permitted by thermal stresses. Since these power densities require excessively high fuel loading (at least for EGCR testing) it might be desirable to test an assembly at considerably reduced heat flux. If, for example, the heat flux is cut to 1/4 of the limiting value the maximum surface temperature will remain unchanged if the mass flow is decreased in the same proportion as the heat flux and the gas inlet and outlet temperatures are raised by 32 percent of the original ΔT_m.

TABLE I

SINGLE AND MULTI-ROD CLUSTER FUEL ELEMENTS AND THEIR APPLICATION IN THE EGCR LOOPS

(Based on Limiting Clad Surface Temperature)

REACTOR CONCEPT		UNITS	EGCR	GNEC	BRITISH HINKLEY POINT	GENERAL ATOMICS HTGCR						
	Case Number		1	2	3	4	5	6	7	8	9	10
Fuel and Channel Description												
	cladding material		ss	Be or ss	Be or ss	ss	ss	ss	ss	Be	ss	ss
n	number of rods		7	19	1	1	7	37	19	37	37	37
d	rod diameter (incl. cladding)	in.	.750	.50(bare)	1.125(bare)	4.15	.79	.363	.495	.363	.363	.363
D	channel diameter	in.	3.08	4.2	---	<6	3.5	3.91	3.82	3.42	4.36	3.99
L	channel length (active)	ft	15	18	20	7.5	25	15	20	20	20	15
		---										
coolant		---	HE	CO_2	CO_2	HE	HE	HE	HE	CO_2	HE	HE
p	pressure, psia	$lb/in.^2$	300	515	200	310	300	500	300	800	1000	1000
Temperatures												
T_1	gas inlet temperature	°F	500	550	354	660	500	500	500	500	600	700
T_2	gas outlet temperature	°F	1050	1050	704	1380	1100	1100	1100	1000	1100	1200
T_3	maximum surface temperature of rod	°F	1300	1500	~900	~2400	1300	1300	1300	1100	1300	1430
ΔT_m	maximum film drop	°F	440	---	---	---	385	385	385	235	362	360
δT_m	maximum temperature rise of coolant ($T_2 - T_1$)	°F	550	500	350	720	600	600	600	500	500	500
δT_m/ft		°F/ft	36.7	27.8	17.5	96	24	40	30	25	25	33.4
Heat Transfer and Pumping Power												
q_m	element heat rate, maximum	Btu/ft-hr	26,500	---	40,200	125,000	18,900	15,100	11,600	8,920	21,100	22,200
$\bar{q}$ *	element heat rate, average	Btu/ft-hr	20,100	12,500	30,400	94,700	14,300	11,400	8,780	6,750	16,000	16,800
Q	channel heat rate, average ($\bar{q}n$)	Btu/ft-hr	140,500	225,000	30,400	94,700	100,000	422,000	167,000	250,000	592,000	622,000
Q_k	channel heat rate, average	kw/ft	41.2	70	9	27.8	29.4	124	49	73.3	173	182
Q_kL		kw/channel	618	1250	180	208	735	1860	980	1470	3460	2730
h	gas heat transfer coefficient	Btu/hr-ft^2 °F	307	---	---	---	238	412	232	400	610	649
	pumping power** (through assembly only)	HP	16.5	13.5	4.8	5.6	19.7	49.8	26.2	59.4	92.7	73.1
M	mass flow per channel	lb/hr	3090	20,700	6430	796	3560	8530	4500	37,100	19,000	15,000

$$\frac{q_m}{\bar{q}}^{*} = 1.32$$

$$\frac{\text{Pumping Power (kw)}}{Q_kL}^{**} = .02$$

TABLE 1 (Continued)

Case Number		UNITS	EGCR 1 *	GNEC 2 **	BRITISH HINKLEY POINT 3 **	GENERAL ATOMICS HTGCR 4 *	5 **	6 ***	7 **	8 **	9 ***	10 ***
EXPERIMENTAL ASSEMBLY CONDITIONS												
$Q_k'L$	kw generated in test assembly	kw	618	1050	135	208	441	1500	735	1100	1500	1500
L'	length of test assembly	ft	15	15	15	7.5	15	15	15	15	15	15
M'	mass flow	lb/hr	3090	30,700	6430	796	3360	7600	4500	37,100	8250	8250
T_1'	inlet temperature	°F	500	635	440	660	740	615	650	625	785	740
T_2'	outlet temperature	°F	1050	1050	704	1380	1100	1160	1100	1000	1160	1240
T_3'	maximum surface temperature	°F	1300	1500	~900	~2400	1300	1300	1100	1100	1300	1470
ΔT_m	maximum film drop	°F	440	---	---	---	385	385	385	235	308	316
ΔP	across test section	psi	6.7	22.5	6.1	7.5	3.9	7.7	5.1	28.2	6.2	8.3
LOOP CONDITIONS												
T_1''	inlet temperature	°F	500	635	440	660	740	615	650	625	785	740
T_2''	outlet temperature	°F	1050	1050	704	1050	1050	1050	1050	1000	1050	1050
Attemperation required		---	No	No	No	Yes	Yes	Yes	Yes	No	Yes	Yes
M''	flow through pump	lb/hr	3090	30,700	6430	1470	3910	8700	5060	37,100	11,900	13,300
P	minimum loop pressure	psia	300	515	200	310	300	300	300	800	650	725

* Can duplicate all reactor concept conditions.

** Can duplicate all reactor concept conditions except length.

*** Cannot duplicate reactor concept Q_k. Temperatures, pressure and mass flow adjusted to hold T_3 at reactor design value.

TABLE II

PARALLEL PLATE ASSEMBLIES

$q_m/\bar{q} = 1.32$

(Based on the Limiting Thermal Stress)

REACTOR CONCEPT		UNITS	2.0 inch square array					
Case Number			1	2	3	4	5	6
Fuel and Channel Description								
n	number of plates*	---	2 (1.78)	4 (3.67)	2 (2.37)	3 (3.08)	7 (6.68)	3 (3.48)
x_2	plate spacing (gap width)	in.	.90	.30	.60	.55	.20	.33
t	plate thickness	in.	.25	.25	.25	.10	.10	.25
L	channel length	ft	25	15	15	15	10	15
p	pressure, absolute, psia	lb/in.^{2}	430	1115	350	94	313	410
moderator		---	graphite	graphite	graphite	BeO	BeO	graphite
coolant		---	helium	helium	helium	CO_2	CO_2	hydrogen
Temperatures								
T_1	gas inlet temperature	°F	500	500	500	500	500	500
T_2	gas outlet temperature	°F	1500	1500	1500	1500	1500	1500
T_3	maximum surface temperature of plate	°F	2130	1730	2130	2130	1730	1730
ΔTm	maximum film drop	°F	1000	500	1000	1000	500	500
δTm	maximum temp rise of coolant ($T_2 - T_1$)	°F	1000	1000	1000	1000	1000	1000
$\delta Tm/L$		°F/ft	40	67	67	67	100	67
Heat Transfer and Pumping Power								
q_m	element heat rate, maximum	Btu/ft-hr	2.6×10^5	2.6×10^5	2.6×10^5	6.0×10^4	6.0×10^4	2.6×10^5
$\bar{q}$	element heat rate, average	Btu/ft-hr	1.97×10^5	1.97×10^5	1.97×10^5	4.56×10^4	4.56×10^4	1.97×10^5
Q	channel heat rate, average ($\bar{q}$ n)	Btu/ft-hr	3.43×10^5	7.23×10^5	4.67×10^5	1.4×10^5	3.04×10^5	6.85×10^5
Q_k	channel heat rate, average	kw/ft	101	212	137	41.2	88.9	200
Q_kL		Mw/channel	2.51	3.18	2.05	.618	.889	3.00
h	gas heat transfer coeff.	Btu/hr-ft^2-°F	775	1,560	775	180	360	1,560
	pumping power** (through assembly only)	HP	67	83.7	55	16.5	23.3	30.2
M	mass flow per channel	lb/hr	6940	8700	5640	7730	11,200	2870

*Since ΔTm, $\delta Tm/L$ and t were arbitrarily selected, x_2 will not come out to yield an integral number of plates in a 2.0 inch array except by accident. The numbers in brackets represent the values of n for the x_2 values used, the nearest whole numbers being shown outside.

**Pumping power (kw)/ Q_kL = .02

TABLE II, PARALLEL PLATE ASSEMBLIES (continued)

EXPERIMENTAL ASSEMBLY CONDITIONS		UNITS	1	2	3	4	5	6
$Q_k'L$	kw generated in test assembly	kw	1500	1500	1500	610	889	1500
L'	length of test assembly	ft	15	15	15	15	10	15
	mod/U-235 ratio	----	7.5	20	11	10	10	17
	approx. % UO_2 or UC	w/o	77	57	69	54	54	58
M'	mass flow	lb/hr	4160	4110	4130	7730	11,800	1470
T_1	inlet temperature	°F	600	600	600	500	570	600
T_2	outlet temperature	°F	1600	1600	1600	1500	1520	1580
T_3	maximum surface temperature	°F	2130	1730	2130	2130	1730	1730
ΔTm'	maximum film drop	°F	900	424	940	1000	500	431
ΔP	across test section	psi	< .5	.1	3.2	3.5	17	4.4
LOOP CONDITIONS								
T_1''	inlet temperature	°F	600	600	600	500	570	600
T_2''	outlet temperature	°F	1050	1050	1050	1050	1050	1050
Attemperation required		---	Yes	Yes	Yes	Yes	Yes	Yes
M''	flow through pump	lb/hr	9250	9250	9200	14,000	24,200	3110
P''	loop pressure	psia	500	500	500	200	300	500

TABLE III

HEX. BLOCK FUEL ASSEMBLIES

(Based on Limiting Thermal Stress)

Hex. Block : BeO
Fuel : BeO and UO_2 U/O = 0.02

REACTOR CONCEPT		UNITS	1	2	3	4	5	6
r	max. power/avg. power (axial)		1.32	1.00	1.00	1.32	1.32	1.32
d_1	tube inside diameter	in.	.600	.600	1.000	1.000	1.000	1.000
d_2	tube outside diameter	in.	.800	.800	1.200	1.200	1.400	1.200
d_3	channel diameter	in.	1.11	1.11	1.714	1.714	1.92	1.714
w	web thickness	in.	.200	.200	.400	.400	.050	.400
t	tube thickness	in.	.100	.100	.100	.100	.200	.100
De	equivalent diameter	in.	.381	.381	.641	.641	.633	.641
"A"	hex. block area	ft^2	13.65×10^{-3}	13.65×10^{-3}	38.2×10^{-3}	38.2×10^{-3}	24.6×10^{-3}	38.2×10^{-3}
L	length of tube	ft	10	10	10	10	10	10
2ℓ	hex. block diameter	in.	1.74	1.74	2.91	2.91	2.34	2.91
coolant			CO_2	CO_2	CO_2	CO_2	CO_2	H_2
pressure		psia	144	181.5	83	64.8	35.0	37.5
T_1	gas inlet temperature	°F	500	500	500	500	500	500
T_2	gas outlet temperature	°F	1500	1500	1500	1500	1500	1500
T_3	max. tube temperature	°F	2130	2130	2130	2130	2130	2130
ΔTm	max. film drop	°F	1000	1000	1000	1000	1000	1000
Tm	max. temp rise of gas	°F	1000	1000	1000	1000	1000	1000
q_m	element heat rate, maximum	Btu/hr-ft	6.76×10^4	6.76×10^4	10.4×10^4	10.4×10^4	5.94×10^4	10.4×10^4
$\bar{q}$	element heat rate, average	Btu/hr-ft	5.12×10^4	6.76×10^4	10.4×10^4	7.38×10^4	4.50×10^4	7.88×10^4
Q	channel heat rate, average ($\bar{q}$ n)	Btu/hr-ft	5.12×10^4	6.76×10^4	10.4×10^4	7.88×10^4	4.50×10^4	7.88×10^4
Q_kL	heat rate per channel	Kw	149.5	198.0	304.5	230.5	131.8	230.5
	pumping power* through assembly	hp	4.02	5.32	8.18	6.20	3.54	6.20
M	mass flow per channel	lb/hr	1840	2425	3725	2825	1615	221
ΔP	across test section	psi	14.3	18.0	5.2	6.4	3.46	1.96

*Pumping power (kw)/Q_kL = .02.

HEX. BLOCK FUEL ASSEMBLY (continued) TABLE III

EXPERIMENTAL ASSEMBLY		UNITS	1	2	3	4	5	6
$Q_k'L$	assembly heat rate	kw	149.5	198.0	304.5	230.5	131.8	230.5
L'	length of assembly	ft	10	10	10	10	10	10
	Be/U^{-235} ratio	----	10	6.4	6.4	10	46	10
	Approx. % UO_2	w/o	54	54	63	54	20	54
M'	mass flow	lb/hr	2030	2670	4100	3110	1780	243
T_1'	inlet temp (max. app. at 3/4 L')	°F	600	600	600	600	600	600
T_2'	outlet temperature	°F	1600	1600	1600	1600	1600	1600
T_3'	surface temperature, max.	°F	2130	2130	2130	2130	2130	2130
$\Delta P'$	across assembly	psi	14.3	18.0	10.1	7.6	4.35	4.02
LOOP CONDITIONS								
T_1''	inlet temperature	°F	600	600	600	600	600	600
T_2''	outlet temperature	°F	1050	1050	1050	1050	1050	1050
	Attemperation required (if $T_2' > 1050$)	----	Yes	Yes	Yes	Yes	Yes	Yes
M''	mass flow through pump	lb/hr	4060	5350	8200	6220	3560	485
P''	loop pressure	psia	Min. 50	Min. 67	Min. 102	Min. 77	Min. 44	Min. 77

PARALLEL PLATE FUEL ASSEMBLIES

$r_{ax} = 1.32$

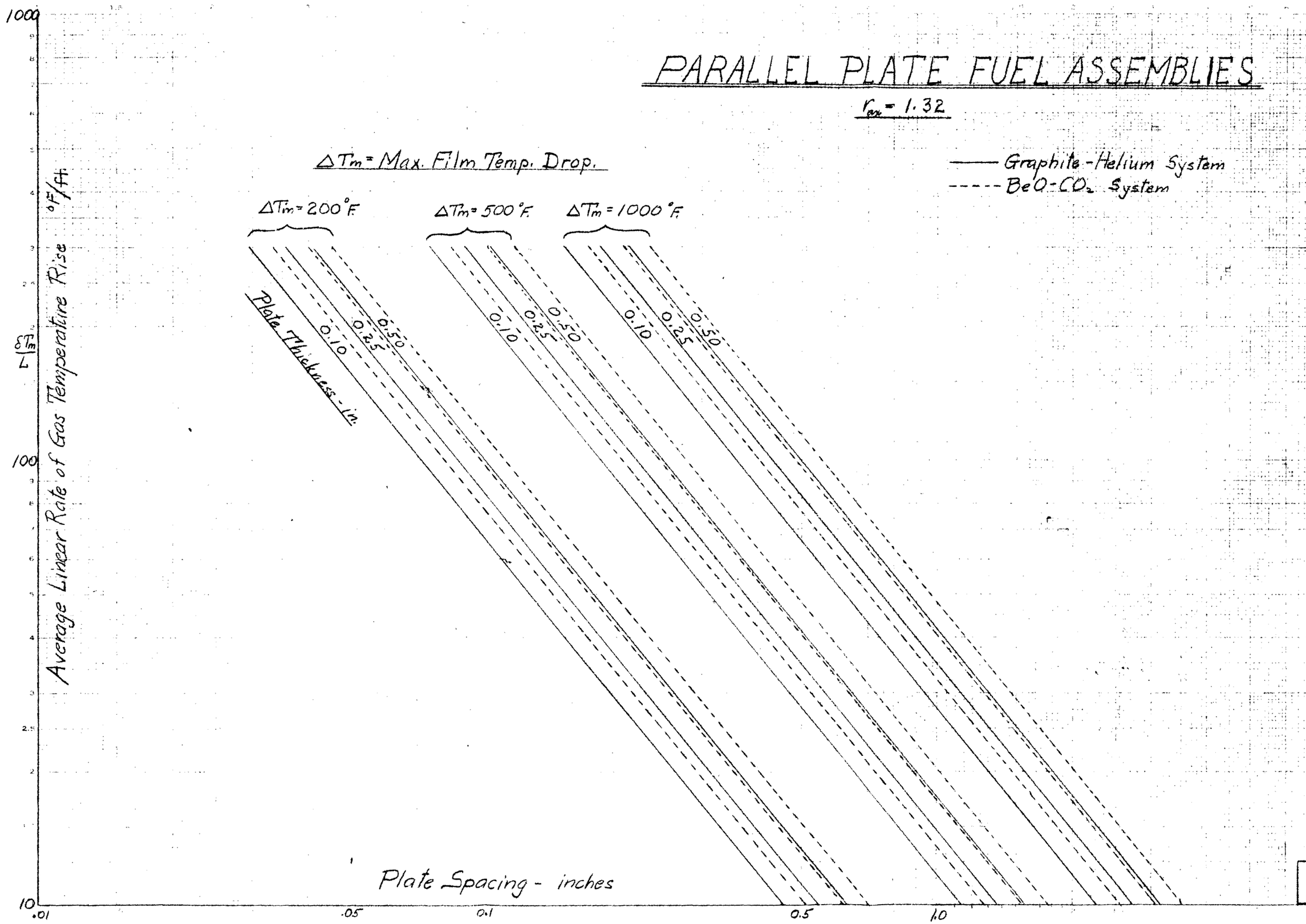

Distribution

1-3. DTIE
4. M. J. Skinner