OAK RIDGE NATIONAL LABORATORY

operated by

UNION CARBIDE CORPORATION

for the

U.S. ATOMIC ENERGY COMMISSION

ORNL - TM - 243

COPY NO. - 4

DATE - May 29, 1962

ORNL MASTER COPY

Study of a Simulated Slurry Reactor Core High Pressure System

L. F. Parsly, Jr., R. D. Bundy, P. H. Harley, R. J. Kedl and M. Richardson

SUMMARY

Thoria-8% urania slurry was circulated for 2850 hr in a test system including a 30-in. inside diameter mockup spherical core vessel. Operating conditions included flows of 95 to 380 gpm, temperatures of 40° to 300°C, and concentrations of 170 to 800 g Th-U/l. Under most conditions the slurry was maintained satisfactorily in suspension, but operating conditions were experienced at some of the low flows in which the slurry in the vessel became substantially less concentrated than the slurry circulating external to the vessel, and a heavy sediment layer occured on the bottom vessel wall. The minimum flow required to avoid such suspension increases with increasing temperature and decreases with increasing concentration.

The slurry appearing to have satisfactory handling properties during the first 1700 hr of operation. Generalized corrosion was of the order of 0.1 mpy and particle attrition was barely detectable. In the later runs a tendency to form intractable plugs was found and the slurry is therefore considered an unsatisfactory material.

NOTICE

This document contains information of a preliminary nature and was prepared primarily for internal use at the Oak Ridge National Laboratory. It is subject to revision or correction and therefore does not represent a final report. The information is not to be abstracted, reprinted or otherwise given public dissemination without the approval of the ORNL patent branch, Legal and Information Control Department.

LEGAL NOTICE

This report was prepared as an account of Government sponsored work. Neither the United States, nor the Commission, nor any person acting on behalf of the Commission:

A. Makes any warranty or representation, expressed or implied, with respect to the accuracy, completeness, or usefulness of the information contained in this report, or that the use of any information, apparatus, method, or process disclosed in this report may not infringe privately owned rights; or

B. Assumes any liabilities with respect to the use of, or for damages resulting from the use of any information, apparatus, method, or process disclosed in this report.

As used in the above, "person acting on behalf of the Commission" includes any employee or contractor of the Commission, or employee of such contractor, to the extent that such employee or contractor of the Commission, or employee of such contractor prepares, disseminates, or provides access to, any information pursuant to his employment or contract with the Commission, or his employment with such contractor.

INTRODUCTION

After tests with the HRE-2 blanket mockup[1] had indicated that the blanket vessel flow system was not capable of maintaining adequate slurry suspension in the blanket, it was decided to replace the original HRE-2 blanket vessel model with an experimental pressure vessel which would be better adapted for slurry handling. Design studies were made in the latter half of 1957 and the vessel was completed and delivered in December, 1958. The vessel is adapted for operation either as a slurry core or slurry blanket, with alternative flow schemes available for either core or blanket operation.

Since a slurry core experiment proposal was under serious consideration at the time the new pressure vessel was installed, the first series of experiments was planned to investigate performance under proposed core operating conditions. These were: maximum temperature of 200°C, maximum operating pressure of 500 psig; maximum slurry concentration of 500 Th-U/l, and slurry of relatively high uranium content (8% U).

After two experimental runs under the above conditions, the system was prepared for operation at 300°C and 2000 psi, and a low pressure slurry storage and handling system was connected. Two additional runs were then made at higher temperatures and concentrations. Operation of the low-pressure system and its interconnections to the high-pressure system are not discussed in this report.

DESCRIPTION OF EQUIPMENT

The high-pressure system flowsheet is shown in Fig. 1. The circulating pump, pressurizer and roughly 50% of the piping are identical with those used in the previous experiments[1]. The new section comprises the pressure vessel and piping runs from the pressurizer to the pressure vessel inlet and from the pressure vessel outlet to the high-pressure section of the existing pump suction run.

The pressure vessel (Fig. 2) is a 29 1/2-in. inside diameter sphere superimposed on a 60° included angle cone. It is designed for 2000 psi at 300°C and was fabricated of type 347 stainless steel to facilitate alterations in the field. An ASA 16 in. 1500 lb ring joint flanged top head closure is provided to permit conversion of the vessel to a simulated blanket. The bottom closure is an ASA 8 in. 1500 lb. ring joint flange, to which a special tee adapter for concentric inlet-outlet flow can be attached. These two large flanges are provided with leak detector connections. Three ASA 6-in. 1500 lb ring joint flanged handholes are provided in the upper hemisphere for inspection purposes. Two 4 in. ips x 0.500 in. wall tangential inlets are installed at the equator. These are currently capped off. A total of twenty-two bosses for insertion of 1/4 in. od sample tubes are provided.

On the basis of visual flow observations and sampling studies in a 6-in. plastic model of the pressure vessel and heat transfer studies in a 30-in. id low-temperature vessel[2], concentric inlet-outlet flow at

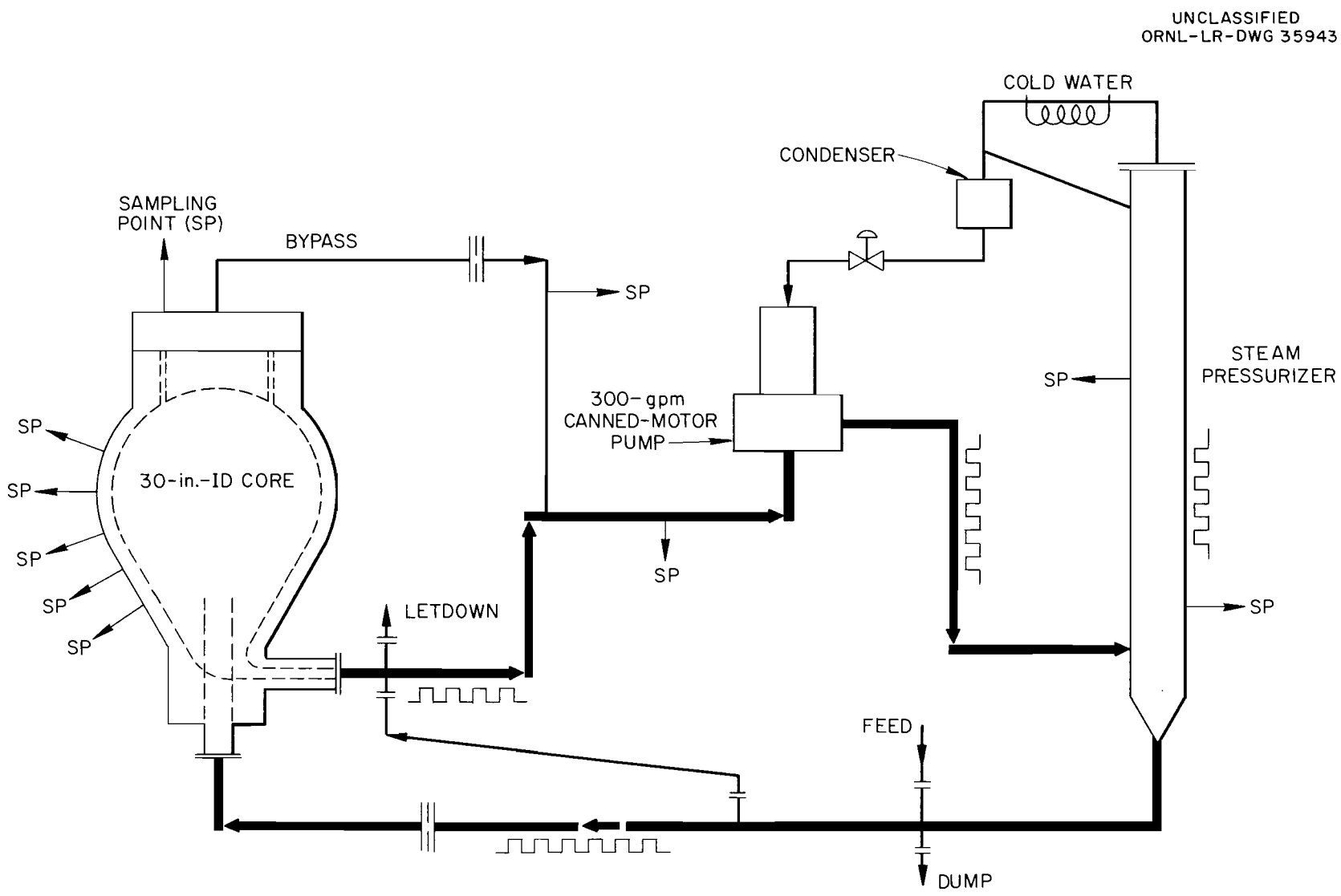

Fig. 1 300 SM High Pressure Circulating System

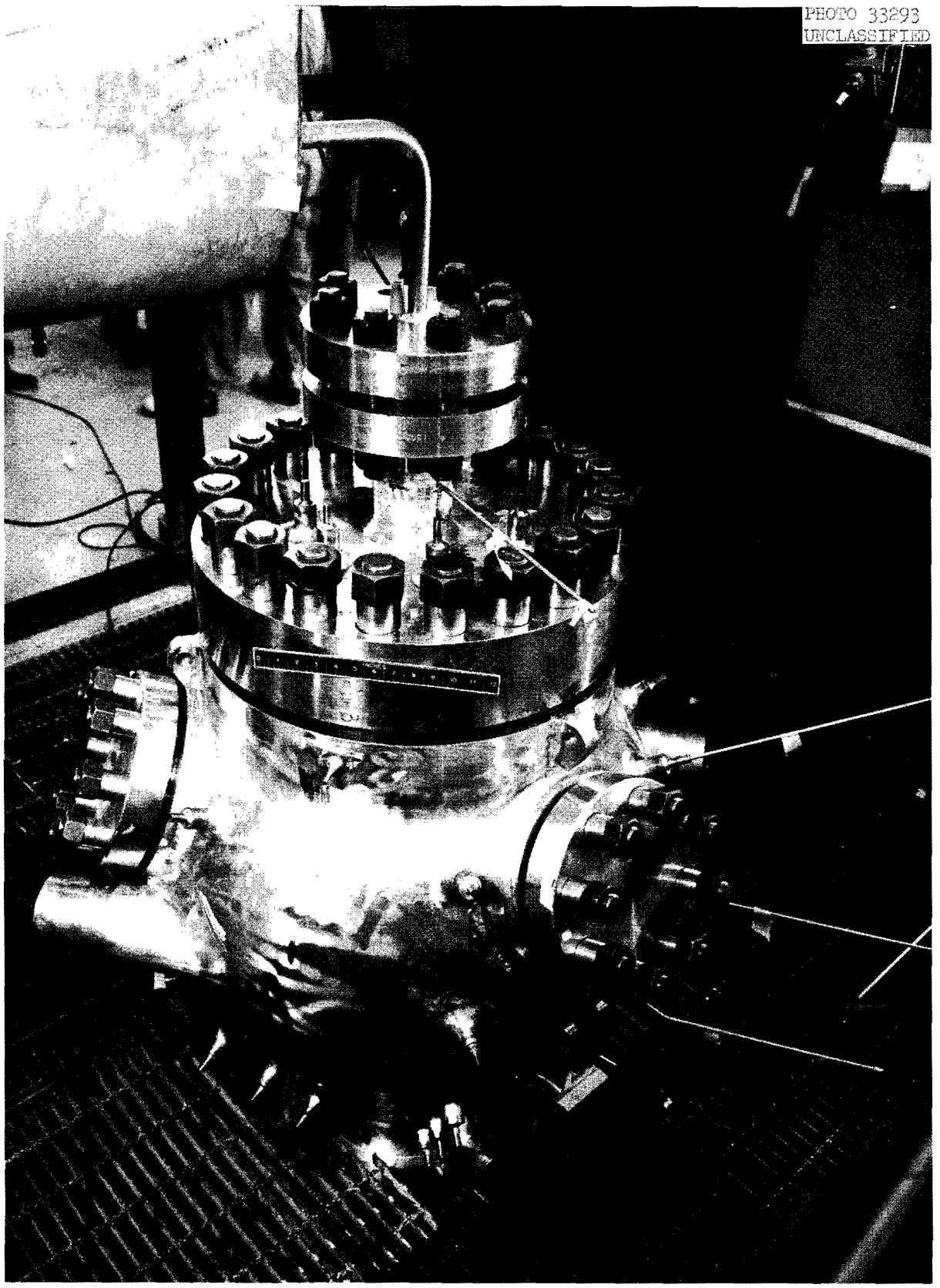

Fig. 2. 300 SM Pressure Vessel

the bottom, with a small bleed stream from the top to flush out gas bubbles, was selected in preference to straight up-flow or straight down-flow. The central inlet nozzle was placed on the extended circumference of the sphere since the heat transfer experiments indicated that this was the optimum location. The nozzle was sized to give a velocity of 30 ft/sec at 300 gpm.

For the first run (SM-6) six sample connections were installed on the vessel placed as shown in Fig. 3. After run SM-6, six additional samplers were added as shown in Fig. 4.

No further changes were made to the vessel subsequent to run SM-7. However, changes to the older section of the high-pressure system deemed desirable to assure trouble-free operation at pressures up to 200 psi and temperatures up to 300°C were undertaken at that time, and the high- and low-pressure systems were connected together.

RESULTS OF EXPERIMENTAL RUNS

Four experimental runs were completed during the period covered by this report. The first two, SM-6 and SM-7, were made to study concentration distribution in the pressure vessel at concentrations of 250 to 500 g Th-U/l and temperatures up to 200°C. The latter two were made to explore the limits of satisfactory slurry suspension at higher concentrations and in the temperature range of 200° to 300°C.

Run SM-6

This run comprised 870 hr of slurry circulation. The system was initially loaded to a concentration of 540 g Th-U/l. Samplings were taken at five flow rates ranging from 136 to 380 gpm at both 150° and 200°C (each sampling reduced the inventory approximately 1%). Then a large slurry withdrawal was made to reduce the charge level to approximately 370 g Th-U/l and a series of samples was taken covering the same range of flow rates and temperatures. A second slurry withdrawal to reduce the concentration level to approximately 275 g Th-U/l was made and the series of samplings at the 370 g Th-U/l concentration was repeated.

The run was terminated after the final series of samplings. No serious operating difficulties occurred during the run, although a minor intermittent steam leak was found at a tube union in one of the sample lines.

Run SM-7

After adding the additional sampling facilities described above, the slurry withdrawn during run SM-6 was reloaded and run SM-7, comprising 790 hr of slurry circulation, was completed. Samplings covering the same range of temperatures, flows and concentrations were made. In addition, at the 200 g Th-U/l concentration level, the flow rate range was extended down to 95 gpm and the temperature range was extended down to 40°C at a flow rate of 380 gpm. The run was trouble-free.

During the interim between run SM-7 and run SM-8, the high-pressure system was readied for 2000 psi operation. On completion of

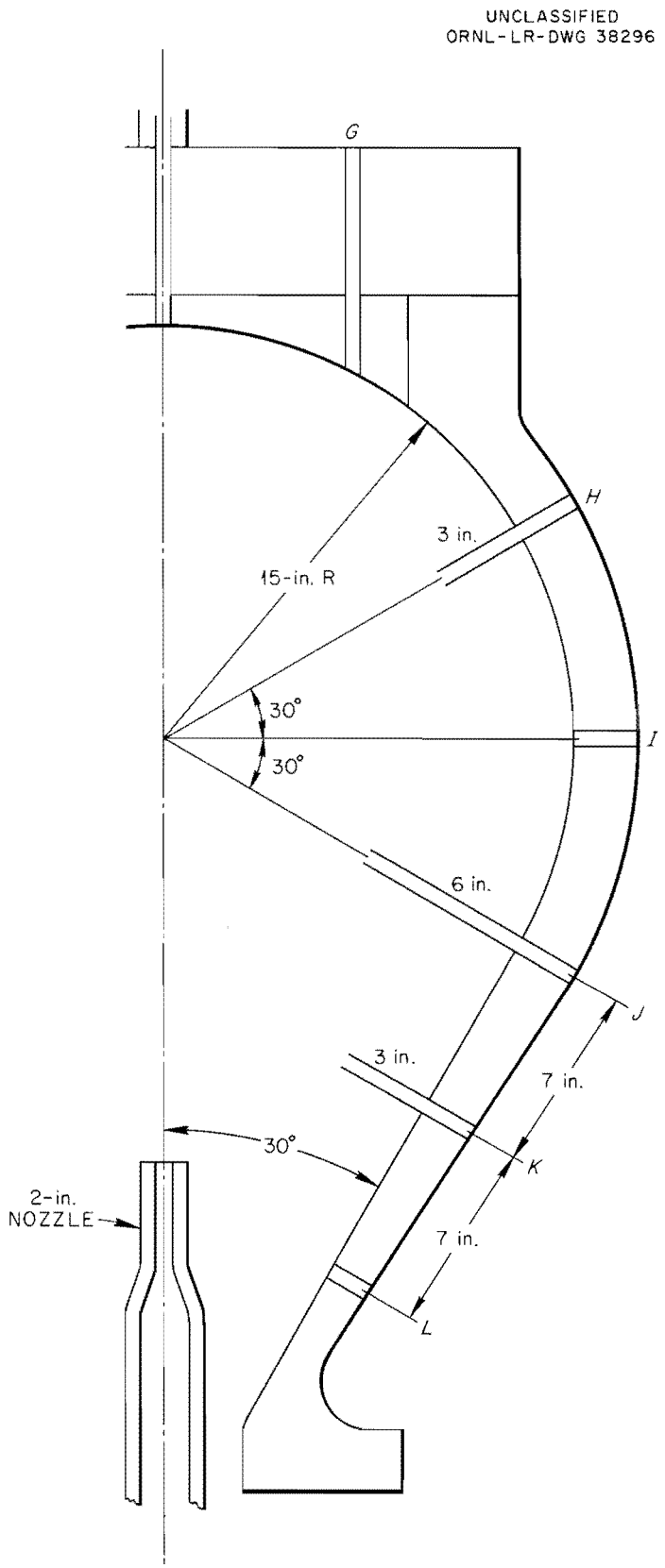

Fig. 3 Vessel Sample Point Locations, Run SM-6

UNCLASSIFIED
ORNL-LR-DWG 38299

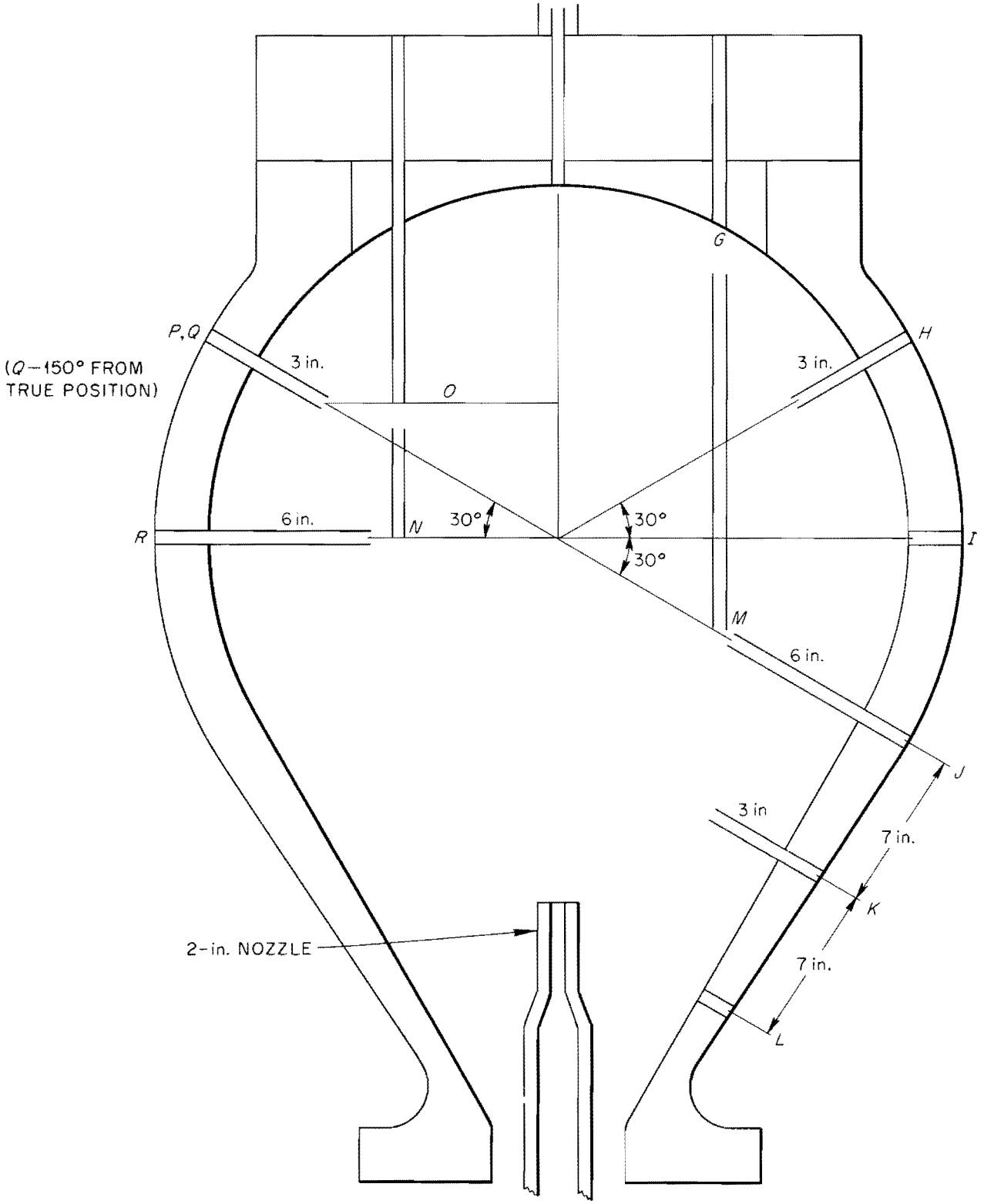

the changes, the system was subjected to a hydrostatic test at 3750 psig. It was necessary to seal weld the pump stator to the casing and to tighten three or four flanged joints before the test pressure could be contained. After completing the 3750 psi test with only minor leakage, the pressure was reduced to 2500 psi and the system was made leak-tight.

Just before seal welding the pump, it was operated for a short time to check it out. The check-out was made seven weeks after the end of run SM-7. Even after this period, there was no difficulty in starting up or resuspending the slurry which had been permitted to settle in the loop.

After the high-to low-pressure system tie-ins had been completed, the slurry was removed from the high pressure system by continuous dilution and a test dump was made from 1250 psi and 225°C.

Run SM-8

Run SM-8 was planned to explore the limits of satisfactory slurry suspension in the pressure vessel in the temperature range of 200° - 300°C and at increasing concentrations up to the blanket design concentration level of 1000 g Th-U/l. The run comprised 680 hr of slurry circulation. It was interrupted several times by valve failures in the lines connecting the high and low pressure systems during attempts to charge slurry and finally terminated by a failure of the lower radial bearing of the circulating pump.

The data obtained prior to the pump failure covered the temperature range up to 300°C at concentrations of 300 and 500 g Th-U/l.

Run SM-9

After repairing the pump, run SM-9 was started to complete the program planned for run SM-8. The high-pressure system was charged to 800 g Th-U/l and data were taken at 225° and 300°C. The run comprised 508 hr of slurry circulation, of which the final 200 hr were spent in removing the slurry from the high-pressure system by dilution in preparation for an extended shutdown.

SLURRY DISTRIBUTION STUDIES

One of the objectives of the program was to determine whether the slurry was uniformly distributed in the vessel under various operating conditions. Samples were withdrawn from the points in the system shown on Fig. 4. Altogether, 49 complete sets of samples were taken during the series of runs. Except for the first two sets, which were analyzed chemically, the thoria-urania concentration was determined from specific gravity measurements made as follows: After withdrawing 100 ml of slurry to flush the sample line (this quantity was demonstrated to be adequate at the start of run SM-6 by withdrawing a series of 50 ml samples and determining that the concentration varied in a random manner after the first of the series), two or three 90-95 ml samples from each point were withdrawn into tared 100 ml graduated cylinders. These were weighed to the nearest 0.1 gram, and the volume was read to the nearest 0.1 cc after vibrating out gas bubbles, which tended to become occluded in the settled slurry bed.

An analysis of variance was performed on the specific gravity data for each set of samples to obtain estimates of the error variance of the sampling-analytical procedure and of the significance of the differences observed in the specific gravities of samples taken from different locations. The statistical procedures and tests described by Davies(3) were used.

In addition to the analyses of variance, the Bartlett test(3) to check the homogeneity of the variances within the several sets of samples was carried out on about 10% of the data sets, partly to check the homogeneity of the error variances and partly to serve as a criterion for rejecting questionable observations. These tests generally gave a Chi^2 value having a probability of approximately 25% when no questionable points were involved. This probability is not significant and indicates that it is permissible to combine the individual sample point variances. Where questionable points were involved, the test clearly gave a basis for their rejection, for example in one set of data, the Chi^2 with the questionable point included had a probability of less than 0.1%; with it excluded the probability was increased to over 10%. Less than 1% of the individual samples were rejected.

Out of 47 sets of data on which the analysis of variance was performed, the results showed that the observed differences in concentration among the sample locations had a probability of being due to random errors greater than 10% in one case and less than 1% in the others. The single case where the sample concentrations from the various points did not differ to a significant extent was a sampling taken at 40°C.

The error variances from the various sets of data ranged from 5.6×10^{-6} to 142×10^{-6} $(g/cc)^2$, with an overall average of about 33×10^{-6}. No systematic dependence of the error variance on flow, temperature, or concentration is evident from the data.

After using the statistical procedures to assess the quality of the data and to reject questionable points, the concentration at each sample point was calculated from the arithmetic mean specific gravity of the samples. To provide a uniform basis of comparison and to avoid the effect of day-to-day inventory variations, the concentrations were normalized to the circulating concentration. The results are presented in Table 1. By examining the duplicate sets of data, one concludes that normalized concentration differences of 0.03 are significant.

It has not been possible to describe the behavior of the various sample points quantitatively. Qualitatively the effects are as follows:

The samples become more uniform as concentration is increased at a given temperature and flow rate. The samples become less uniform as temperature increases at a given concentration and flow rate.

The effect of flow rate is more complex. At the 200 g (Th-U)/l level and low flow rates (95 and 126 gpm), the concentration of the samples taken from the several points in the body of the vessel is relatively uniform and lower than the circulating concentration. The

samples from point "L" on the cone wall are substantially more concentrated than the slurry circulating external to the vessel, and the external concentration also is abnormally high. Thus there appears to be a layer of concentrated slurry on the cone wall and some short-circuiting of solids from the vessel inlet to the outlet. Such behavior is consistent with the room-temperature observations made both in small two-and three-dimensional models and in a nearly identical vessel(4), and the observations indicate that slurry dropout is incipient. The sludge near the cone wall may be more concentrated than indicated by the sample results; earlier vessel studies(1) have shown that channelling through concentrated beds occurs rather easily and erroneously dilute samples are frequently obtained.

As the flow rate increases, the three vessel wall samples approach the circulating concentration, while the samples taken from the interior of the vessel remain less than the circulating concentration. The "spread" in the vessel samples increases with flow rate. Whether the low concentrations result from systematic errors in sampling technique, or represent a real variation in concentration within the vessel, is difficult to determine. From the room-temperature studies, the vessel flow pattern is approximately as shown in Fig. 5. The inlet jet persists to the top of the vessel. Beyond the jet impingement zone, there is well-developed flow along the vessel wall in the spherical part of the vessel. Below the sphere-cone junction, there is a region of relatively low and erratic velocity along the cone wall. A second region of low velocity exists in the body of the vessel, having an approximately elliptical outline with the center on the vessel equator midway between the inlet jet and the wall. The direction of flow through this region is erratic. The sampler inlet locations and the direction of flow into the samplers are shown in Fig. 5, and the approximate angles between the local flow vectors and the sampler flow are tabulated.

Wichner(5) has made a study of the errors in sample concentration introduced by the velocity changes in entering a sampler. It is shown that both velocity magnitude changes and directional changes produce errors. If the magnitude of the sample velocity is greater than that of the slurry velocity at the sample point, the sample will tend to be dilute, while if it is less, the sample will be more concentrated than the slurry being sampled. The sampling technique used in the high-pressure experiments consists of taking samples from a constant operating pressure across a fixed resistance. For all but two samplings, the velocity entering the sampler (excepting "Q") was 7 ft/sec.

Wichner also studied the effect of directional changes on entering a sampler by comparing the results for a sample taken without a change in direction with one requiring a 180° change in direction with one requiring a 180° change in direction on entering the sampler. He found that the absolute error introduced by the directional change:

a. Decreases very slightly with increasing concentration.

b. Increases with temperature roughly as the fluidity of water.

c. Increases with ambient slurry velocity

d. Decreases with increased sampling velocity.

ORNL-LR-DWG. 50127
UNCLASSIFIED

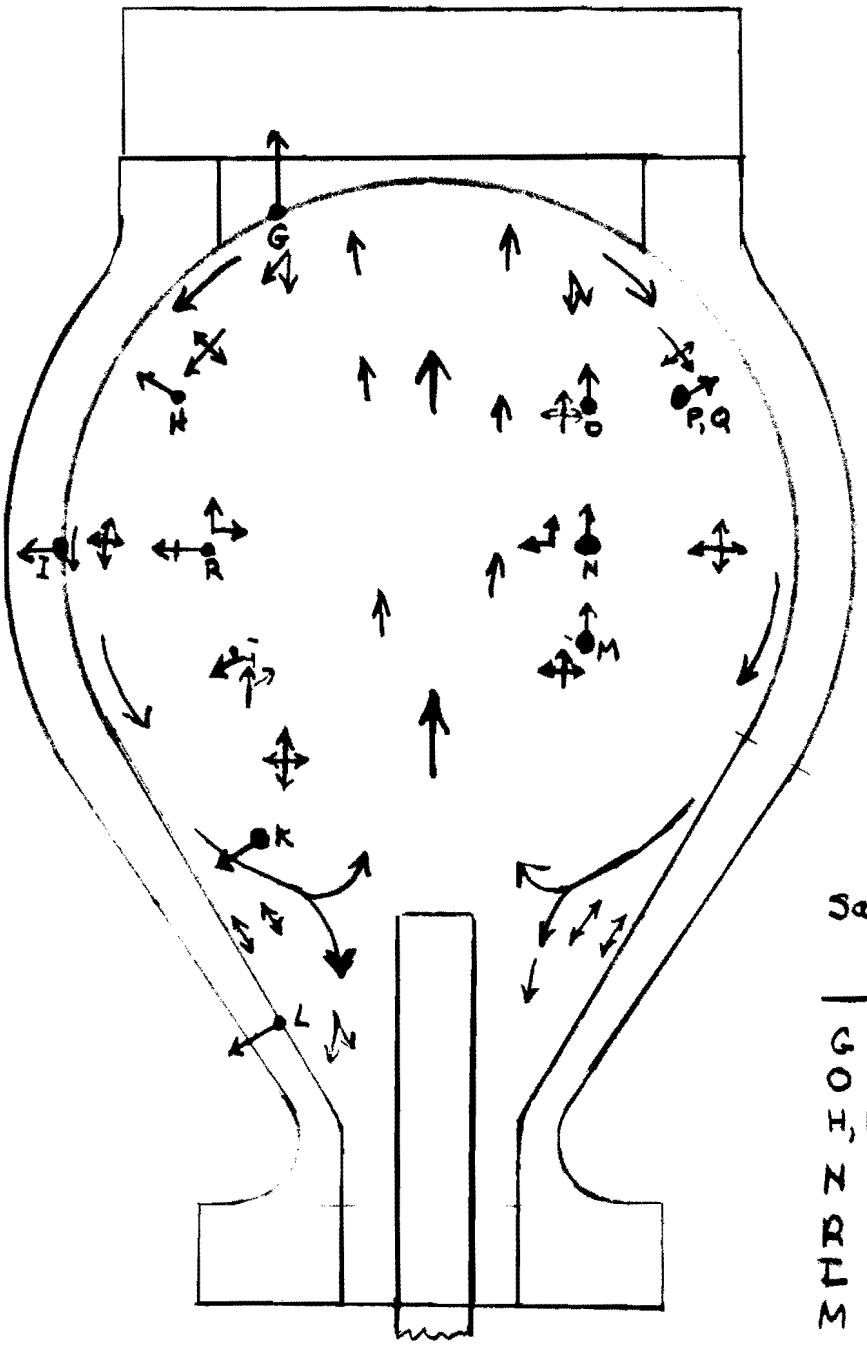

Sampler	Change in Direction Into Sampler
G	115°
O	0-90°
H, P, Q	0-180°
N	0-90°
R	90-180°
I	90°
M	0-90°
J	150°
K	115°
L	90°

Fig 5

300 SM VESSEL FLOW PATTERN AND SAMPLER LOCATIONS

By making the assumption that the concentration in the vessel is uniform and equal to the circulating concentration and comparing the behavior of sampler "J" with predicted results from extrapolation of Wichner's data, one finds that the normalized concentration for point "J" is depressed to an extent which could be accounted for by the 150° change in direction required for slurry to enter the sample line. This tends to support the hypothesis that the observed differences in concentration within the vessel are a result of sampling errors.

If the hypothesis that the concentration in the vessel at flows of 190 gpm and above in uniform is pursued, one would make the following additional predictions as to sample behavior:

Point "M" appears to be so located that the magnitude of the velocity is greater than for point "J", but a directional change of 30° is required to enter "M" versus 150° for "J". Therefore sample "M" should always be substantially higher in concentration than "J". For flows above 190 gpm, Table 1 shows this is true.

Points "N" and "R" appear to be located so that the magnitude of the velocity is the same. A direction change of 0-90° is required to enter "N", 90° - 180° to enter "R". Thus "N" should show higher concentration than "R" above 135 gpm. Table 1 shows that above 135 gpm "N" exceeds "R" for all samplings but one; however the differences in relative concentration are clearly distinguishable in only about half the cases. Thus the behavior of this pair of samples is partially consistent with the hypothesis that sampling error accounts for the observed difference between local concentration in the vessel and circulating concentration.

An additional experiment which could give some information as to the effect of sampler performance on the concentration distribution results being obtained became available during run SM-8. This consists of obtaining a set of samples at a given temperature, concentration and loop flow rate at a pressure of 500 psi and obtaining a second set after raising the loop pressure to 1500 psi. The net effect of the pressure change is to increase the sampler velocity from 7 to 14 ft/sec. There is no reason to expect the pressure change to affect the performance of the circulating system. Sets of samples following this plan were obtained on August 15 and 17, at 300 g Th-U/l, 200°C and 380 gpm. Data at nearly identical conditions were also available from runs SM-6 and SM-7.

The first point of interest is the circulating sample results. For August 15 at 500 psi the concentration is 314 ± 5 g Th-U/l and for August 17 at 1500 psi it is 297 ± 4 g Th-U/l. (The concentration uncertainties are based on a 2-σ confidence band for the specific gravity observations). A set of samples removes 1.5% of the loop inventory and thus should have reduced the concentration by approximately 5 g/l. The difference in measured circulating concentration is thus more than can be accounted for by random sampling errors and inventory change, and there is a very good probability that sampler performance accounts for a substantial part of the difference. The change in measured concentration which might be attributed to sampler performance (-4%) is consistent with Wichner's(5) prediction of the effect of increasing the sampling velocity from 42 to 84% of the ambient slurry velocity, which was the case for the loop sample station at the two pressures.

TABLE 1

SUMMARY OF SLURRY DISTRIBUTION SAMPLING RESULTS, RUNS SM 6-9

Date of Sampling					5/1	4/27	4/28	4/29	5/6	5/5	5/4
Temp. - °C					150	150	150	150	100	76	40
Pr - psig					500	500	500	500	500	500	500
Flow Rate, gpm					95	126	260	380	380	380	380
"Book" Inventory - (kg ThO_2 - UO_x)					76.4	81.2	80.2	79.2	74.6	75.5	76.4
"Book" Concentration - G (Th-U)/l					205	216	213	211	198	201	203
Circulating Concentration - G (Th-U)/l					193	191	186	184	166	168	170
Local Concentration Normalized to Circulating Concentration											
3/4" Top outlet line - top of horizontal run					0.624	0.801	0.898	0.935	0.953	0.995	1.005
3/4" Top outlet line - center of vertical run					0.752	0.864	0.931	0.919	0.960	0.977	0.990
Pressurizer - 18 in. above slurry inlet					0	0	0	0.935	0.960	0.977	0.990
Vessel											
Sampler Designation	Radius in.	Azimuth (referred to slurry outlet) Deg.	Elevation Deg.	Orientation Relative to Radius Deg.							
G	14.75	+60	+64.9	154.9	0.843	0.892	0.970	0.975	0.981	0.977	1.010
O	9.6	+120	+49.8	139.2	0.788	0.872	0.889	0.897	0.912	0.960	0.995
H	11.75	+120	+30.0	180	0.825	0.905	0.920	0.919	0.936	0.983	0.990
P	11.75	+150	+30.0	180	0.792	0.864	0.897	0.866	0.924	0.941	0.970
Q	11.75	0	+30.0	180	0.830	0.864	0.889	0.884	0.924	0.966	1.010
N	6.25	0	0	90	0.778	0.860	0.880	0.900	0.919	0.955	0.990
R	8.75	+60	0	180	0.802	0.872	0.876	0.875	0.889	0.948	0.995
I	14.75	+120	0	180	0.802	0.913	0.996	1.008	1.010	1.025	1.000
M	7.2	-30	-30.0	60	0.792	0.872	0.889	0.889	0.924	0.960	1.005
J	8.75	+120	-30.0	180	0.811	0.872	0.855	0.820	0.889	0.914	0.977
K	13.6	+120	-60.9	149.1	0.843	0.913	0.885	0.854	0.912	0.948	0.990
L	20.3	+120	-73.5	133.5	1.240	1.180	1.081	1.026	1.040	1.030	1.036
Variance Between Samples $(g/cc)^2 \times 10^6$					1476	573	295	275	104.7	56.5	15.8
Variance Within Samples $(g/cc)^2 \times 10^6$					15.7	14.3	39.5	11	15.6	9.2	11.6
Variance Ratio					93.8	40.1	7.47	25.7	6.71	6.15	1.36
1% "F" Valve for Set of Samples					3.67	3.67	3.67	3.41	3.41	3.41	3.41

TABLE 1 continued

Date of Sampling	3/11	4/16	3/10	4/17	3/9	4/20	8/15	8/17
Temp. - °C	200	200	200	200	200	200	200	200
Pr - psig	500	500	500	500	500	500	500	1500
Flow Rate, gpm	126	126	253	253	380	380	380	380
"Book" Inventory - (kg ThO_2 - UO_x)	141.1	139.5	142.2	137.8	143.6	136.1	---	---
"Book" Concentration - G (Th-U)/l	376	371	379	367	382	362		
Circulating Concentration - G (Th-U)/l	346	335	349	335	361	332	314	297
Local Concentration Normalized to Circulating Concentration								
3/4" Top outlet line - top of horizontal run	0.831	0.825	0.866	0.874	0.915	0.907	0.890	0.913
3/4" Top outlet line - center of vertical run		0.883		0.918		0.916	0.935	0.908
Pressurizer - 18 in. above slurry inlet		0	0	0	0.925	0.916	0.956	0.965
Vessel								
Sampler Designation; Radius in.; Azimuth (referred to slurry outlet) Deg.; Elevation Deg.; Orientation Relative to Radius Deg.								
G; 14.75; +60; +64.9; 154.9	0.960	0.960	0.951	0.978	0.988	0.980	0.981	0.982
O; 9.6; +120; +49.8; 139.2		0.919		0.901		0.885	0.885	0.900
H; 11.75; +120; +30.0; 180	0.962	0.945	0.930	0.936	0.908	0.894	0.903	0.928
P; 11.75; +150; +30.0; 180		0.927		0.899		0.880	0.859	0.900
Q; 11.75; 0; +30.0; 180		0.899		0.869		0.862	0.853	0.894
N; 6.25; 0; 0; 90		0.921		0.901		0.905	0.885	0.902
R; 8.75; +60; 0; 180		0.921		0.879		0.865	0.865	0.854
I; 14.75; +120; 0; 180	0.985	0.954	0.990	0.984	1.003	0.987	0.981	1.007
M; 7.2; -30; -30.0; 60		0.936		0.905		0.889	0.896	0.902
J; 8.75; +120; -30.0; 180	0.925	0.936	0.864	0.852	0.816	0.798	0.800	0.869
K; 13.6; +120; -60.9; 149.1	0.950	0.949	0.899	0.905	0.880	0.860	0.851	0.914
L; 20.3; +120; -73.5; 133.5	1.069	1.084	1.035	1.015	1.020	1.018	1.006	1.040
Variance Between Samples $(g/cc)^2 \times 10^6$	2037	701	1836	746	2706	942	956	634
Variance Within Samples $(g/cc)^2 \times 10^6$	19	11.5	13	7.6	33	7	25.5	13.7
Variance Ratio	107	61.0	143	98.3	82	134.5	37.6	46.2
1% "F" Valve for Set of Samples	4.03	3.67	4.03	3.67	3.79	3.41	3.31	3.31

TABLE 1 continued

Date of Sampling	4/30	3/19	4/24	3/18	4/23	3/17	4/22
Temp. - °C	200	200	200	200	200	200	200
Pr - psig	500	500	500	500	500	500	500
Flow Rate, gpm	95	126	126	253	253	380	380
"Book" Inventory - (kg ThO_2 - UO_x)	78.2	96.0	82.2	96.7	83.2	97.5	84.4
"Book" Concentration - G (Th-U)/l	208	256	219	258	222	260	225
Circulating Concentration - G (Th-U)/l	214	228	210	233	200	234	204
Local Concentration Normalized to Circulating Concentration							
3/4" Top outlet line - top of horizontal run	0.430	0.751	0.654	0.843	0.859	0.927	0.927
3/4" Top outlet line - center of vertical run	0.623		0.768		0.850		0.872
Pressurizer - 18 in. above slurry inlet	0	0	0	0	0	0.857	0.788

Vessel

Sampler Designation	Radius in.	Azimuth (referred to slurry outlet) Deg.	Elevation Deg.	Orientation Relative to Radius Deg.							
G	14.75	+60	+64.9	154.9	0.750	0.930	0.839	0.965	0.919	0.978	0.964
O	9.6	+120	+49.8	139.2	0.670		0.775		0.832		0.843
H	11.75	+120	+30.0	180	0.703	0.892	0.794	0.891	0.878	0.901	0.879
P	11.75	+150	+30.0	180	0.687		0.768		0.844		0.836
Q	11.75	0	+30.0	180			0.751		0.817		0.820
N	6.25	0	0	90	0.697		0.775		0.821		0.828
R	8.75	+60	0	180	0.697		0.678		0.817		0.850
I	14.75	+120	0	180	0.670	0.925	0.822	0.971	0.970	1.012	1.000
M	7.2	-30	-30.0	60	0.690		0.775		0.850		0.858
J	8.75	+120	-30.0	180	0.711	0.850	0.768	0.789	0.788	0.735	0.766
K	13.6	+120	-60.9	149.1	0.750	0.901	0.819	0.840	0.844	0.793	0.828
L	20.3	+120	-73.5	133.5	1.210	1.170	1.240	1.048	1.070	1.012	1.037
Variance Between Samples $(g/cc)^2 \times 10^6$					1645	3440	633	1752	637	2193	775
Variance Within Samples $(g/cc)^2 \times 10^6$					78.8	5.6	11	7.3	76.4	11.3	28.5
Variance Ratio					20.9	620	57.5	334	8.3	193	27.2
1% "F" Valve for Set of Samples					3.80	4.03	3.67	4.03	3.67	3.79	3.41

TABLE 1 continued

Date of Sampling	3/5	4/3	3/4	3/2	3/3	4/6	4/9	2/27	2/26	4/7
Temp. - °C	150	150	150	150	150	150	150	150	150	150
Pr - psig	500	500	500	500	500	500	500	500	500	500
Flow Rate, gpm	126	126	190	253	253	253	253	316	380	380
"Book" Inventory - (kg ThO_2 - UO_x)	179.9	188.1	181.2	184.7	182.8	185.7	181.0	186.3	188.1	183.3
"Book" Concentration - G (Th-U)/l	479	501	482	491	486	494	482	496	501	488
Circulating Concentration - G (Th-U)/l	446	463	448	459	451	458	444	461	469	457
Local Concentration Normalized to Circulating Concentration										
3/4" Top outlet line - top of horizontal run	0.947	0.936	0.928	0.932	0.925	0.916	0.922	0.950	0.955	0.916
3/4" Top outlet line - center of vertical run		0.962					0.955			0.956
Pressurizer - 18 in. above slurry inlet	0	0	0	0	0	1.005	0.981	0.995		0.975

Vessel

Sampler Designation	Radius in.	Azimuth (referred to slurry outlet) Deg.	Elevation Deg.	Orientation Relative to Radius Deg.										
G	14.75	+60	+64.9	154.9	1.000	0.982	0.988	0.996	1.001	0.990	0.977	0.994	0.993	0.982
O	9.6	+120	+49.8	139.2		0.970					0.945			0.938
H	11.75	+120	+30.0	180	0.990	0.980	0.980	0.972	0.970	0.970	0.972	0.970	0.950	0.950
P	11.75	+150	+30.0	180		0.979				0.961	0.940			0.936
Q	11.75	0	+30.0	180		0.899					0.922			0.899
N	6.25	0	0	90		0.967				0.961	0.943			0.944
R	8.75	+60	0	180		0.972					0.932			0.926
I	14.75	+120	0	180	0.990	0.982	0.995	1.000	0.991	0.993	0.981	0.998	1.009	0.995
M	7.2	-30	-30.0	60		0.982					0.943			0.944
J	8.75	+120	-30.0	180	0.968	0.982	0.945	0.932	0.929	0.938	0.917	0.929	0.860	0.884
K	13.6	+120	-60.9	149.1	0.993	0.988	0.962	0.944	0.963	0.958	0.934	0.944	0.908	0.920
L	20.3	+120	-73.5	133.5	1.006	1.011	0.995	1.004	1.000	0.986	0.995	1.017	1.002	1.002
Variance Between Samples $(g/cc)^2 \times 10^6$					265	320	397	610	605	362	313	741	849	596
Variance Within Samples $(g/cc)^2 \times 10^6$					11.3	28.3	18.2	27.5	34.4	30.9	15.9	22.8	48.8	21.9
Variance Ratio					23.4	11.3	21.8	22.1	18.7	11.7	19.7	32.5	17.4	27.2
1% "F" Valve for Set of Samples					4.03	3.67	4.03	3.79	3.71	4.30	3.67	3.79	3.89	3.67

TABLE 1 continued

Date of Sampling	2/17	2/18	4/2	2/19	2/20	4/1	2/24	2/12	2/16	3/31	11/5
Temp. - °C	200	200	200	200	200	200	200	200	200	200	300
Pr - psig	500	500	500	500	500	500	500	500	500	500	500
Flow Rate, gpm	126	126	126	190	253	253	316	380	380	380	380
"Book" Inventory - (kg ThO_2 - UO_x)	197.5	195.7	188.1	194.3	192.8	193.0	191.2	200.4	199.1	195.4	---
"Book" Concentration - G (Th-U)/l	526	520	501	518	513	514	509	534	530	520	---
Circulating Concentration - G (Th-U)/l	477	483	470	493	485	467	481	497	497	479	791
Local Concentration Normalized to Circulating Concentration											
3/4" Top outlet line - top of horizontal run	0.931/0.865	0.925	0.906	0.900	0.909	0.918	0.915	0.962	0.958	0.927	
3/4" Top outlet line- center of vertical run			0.954			0.941				0.988	
Pressurizer - 18 in. above slurry inlet	0	0	0	0	0	0.170	0	0.995		0.989	
Vessel											
Sampler Designation / Radius in. / Azimuth (referred to slurry outlet) Deg. / Elevation Deg. / Orientation Relative to Radius Deg.											
G / 14.75 / +60 / +64.9 / 154.9	1.000	0.977	0.992	0.983	1.004	0.997	0.985	1.015	1.003	0.998	1.016
O / 9.6 / +120 / +49.8 / 139.2			0.963			0.947				0.975	0.955
H / 11.75 / +120 / +30.0 / 180	0.999	0.990	0.992	0.979	0.972	0.975	0.960	0.974	0.970	0.965	0.990
P / 11.75 / +150 / +30.0 / 180			0.963			0.975				0.966	0.960
Q / 11.75 / 0 / +30.0 / 180			0.936			0.936				0.946	0.927
N / 6.25 / 0 / 0 / 90			0.963			0.958				0.966	0.939
R / 8.75 / +60 / 0 / 180			0.972			0.950				0.927	0.937
I / 14.75 / +120 / 0 / 180	0.999	0.979	0.982	0.980	0.992	1.000	1.005	0.997	0.995	1.009	1.010
M / 7.2 / -30 / -30.0 / 60			0.969			0.974				0.970	0.960
J / 8.75 / +120 / -30.0 / 180	0.968	0.977	0.972	0.935	0.925	0.896	0.894	0.955	0.938	0.872	0.940
K / 13.6 / +120 / -60.9 / 149.1	1.007	0.977	0.965	0.953	0.990	0.922	0.942	0.950	0.940	0.920	0.950
L / 20.3 / +120 / -73.5 / 133.5	1.042	1.019	1.018	1.002	1.000	1.009	1.000	0.995	1.005	1.024	-----
Variance Between Samples $(g/cc)^2 \times 10^6$	1565	620	385	872	1226	614	1432			763	1894
Variance Within Samples $(g/cc)^2 \times 10^6$	104	142	12.3	27.7	32.4	98.3	59.8			95	116
Variance Ratio	15.1	4.35	31.4	31.5	37.8	6.25	24.0			8.05	16.3
1% "F" Valve for Set of Samples	4.00	4.03	3.67	4.03	4.03	3.67	3.79			3.96	4.10

TABLE 1 continued

Date of Sampling	3/12	4/15	3/13	4/14	3/16	4/13
Temp. - °C	150	150	150	150	150	150
Pr - psig	500	500	500	500	500	500
Flow Rate, gpm	126	126	253	253	380	380
"Book" Inventory - (kg ThO_2 - UO_x)	140.0	139.5	139.0	143.0	138.0	144.8
"Book" Concentration - G (Th-U)/l	372	371	370	381	368	385
Circulating Concentration - G (Th-U)/l	337	335	346	345	336	350
Local Concentration Normalized to Circulating Concentration						
3/4" Top outlet line - top of horizontal run	0.900	0.898	0.890	0.905	0.940	0.927
3/4" Top outlet line - center of vertical run		0.921		0.946		0.940
Pressurizer - 18 in. above slurry inlet	0	0	0.521/0.326	0.874	0.974	0.960

Vessel

Sampler Designation	Radius in.	Azimuth (referred to slurry outlet) Deg.	Elevation Deg.	Orientation Relative to Radius Deg.						
G	14.75	+60	+64.9	154.9	0.978	0.982	0.973	0.984	0.960	0.980
O	9.6	+120	+49.8	139.2		0.956		0.921		0.920
H	11.74	+120	+30.0	180	0.969	0.982	0.930	0.955	0.943	0.947
P	11.75	+150	+30.0	180		0.958		0.935		0.918
Q	11.75	0	+30.0	180		0.933		0.914		0.900
N	6.25	0	0	90		0.963		0.944		0.911
R	8.75	+60	0	180		0.954		0.932		0.900
I	14.75	+120	0	180	0.980	0.982	0.954	0.986	0.995	0.994
M	7.2	-30	-30.0	60		0.965		0.939		0.916
J	8.75	+120	-30.0	180	0.964	0.982	0.885	0.912	0.848	0.854
K	13.6	+120	-60.9	149.1	0.971	0.984	0.916	0.921	0.880	0.880
L	20.3	+120	-73.5	133.5	1.025	1.051	0.977	1.018	1.018	1.005
Variance Between Samples $(g/cc)^2 \times 10^6$					474	334	765	364	1271	551
Variance Within Samples $(g/cc)^2 \times 10^6$					43	9.5	14.6	14.5	48.7	13.7
Variance Ratio					11	35.1	52.5	25.1	26.1	40.1
1% "F" Valve for Set of Samples					4.03	3.67	4.03	3.67	3.79	3.67

After adjusting the normalized local concentrations in the vessel for the effect of the velocity change on the circulating concentration measurement, a comparison with the earlier samplings shows the following: Samples "J" and "K" show definitely higher concentration at the higher pressure "R"; "G" and "M" show definitely lower concetration; "O", "N", "I", and "L" are possibly lower; "H", "P" and "Q" are unchanged. Overall, the vessel concentration distribution appears slightly more uniform. It seems certain that changing the sample velocity did produce a change in the observed concentration distribution.

The results discussed above show that sampler performance influenced the concentration distribution observations. However, it cannot be shown that the differences between circulating loop samples and vessel samples are entirely due to sampler performance. A real concentration gradient, as a result of centrifugal forces, may be present.

LIMITS OF SATISFACTORY SLURRY SUSPENSIONS

In the vessel concentration distribution studies discussed above, it became evident that the behavior at high and low flows was different. When the flow became low enough, the concentration at the top of the vessel (point "G") became substantially less than the circulating concentration and that on the cone wall (point "L") became higher than the circulating concentration. This distribution pattern appeared to represent unsatisfactory suspension, and it was decided that it would be of interest to establish the limits of this region as a function of temperature and concentration. For this purpose, analysis of samples from the circulating loop and the top and bottom of the vessel were believed to be sufficient. It should be noted that the transition from the "unsatisfactory" to the "satisfactory" distribution pattern is gradual. The following criteria of unsatisfactory suspension were arbitrarily selected on the basis of the complete vessel sampling results:

$$\frac{C_G}{C_A} \leq 0.9$$

$$\frac{C_L}{C_A} \geq 1.15$$

The subscripts designate the sample points: A(main loop), G(top of vessel) and L(bottom cone) respectively. The sample data for determining the limits of poor suspension are presented in Table 2. The results are summarized on the following page.

Table 2

Comparison of Loop and Vessel Samples

Circulating Concentration g Th-U/l	Temp. °C	Flow gpm	$\frac{C_G}{C_A}$	$\frac{C_L}{C_A}$	
170	40	380	1.010	1.036	
168	76	380	0.977	1.030	
166	100	380	0.981	1.040	
184	150	380	0.975	1.026	
186	150	253	0.970	1.081	
191	150	126	0.892	1.181	Poor Suspension
193	150	95	0.843	1.240	Poor Suspension
204	200	380	0.964	1.037	
234	200	380	0.978	1.012	
200	200	253	0.919	1.070	
233	200	253	0.965	1.048	
210	200	126	0.839	1.240	Poor Suspension
228	200	126	0.930	1.170	Poor Suspension
214	200	95	0.750	1.210	Poor Suspension
350	150	380	0.980	1.005	
336	150	380	0.960	1.018	
345	150	253	0.984	1.018	
346	150	253	0.973	0.977	
335	150	126	0.982	1.051	
337	150	126	0.978	1.025	
297	200	380	0.982	1.040	
314	200	380	0.981	1.006	
332	200	380	0.980	1.018	
361	200	380	0.988	1.020	
335	200	253	0.978	1.015	
349	200	253	0.951	1.035	
335	200	126	0.960	1.084	
346	200	126	0.960	1.069	
301	225	380	0.976	1.030	
295	225	316	1.005	1.042	
292	225	253	0.988	1.059	
289	225	190	0.999	1.079	
298	225	126	0.929	1.090	
285	250	380	1.041	1.075	
286	250	316	0.985	1.075	
288	250	253	0.990	1.075	
285	250	190	0.974	1.085	
283	250	126	0.970	1.109	
285	275	380	1.012	1.079	
280	275	316	0.995	1.092	
272	275	253	1.020	1.123	
278	275	190	0.967	1.085	
289	275	126	0.890	1.182	Poor Suspension
284	300	380	0.991	1.073	
278	300	316	0.980	1.096	
269	300	253	0.991	1.150	
274	300	190	0.975	1.192	
282	300	126	0.905	1.203	Poor Suspension
457	150	380	0.982	1.002	
469	150	380	0.955	1.002	
461	150	316	0.994	1.017	

Table 2 continued

Circulating Concentration g Th-U/l	Temp. °C	Flow gpm	$\frac{C_G}{C_A}$	$\frac{C_L}{C_A}$	
444	50	253	0.977	0.995	
458	150	253	0.990	0.986	
451	150	253	1.001	1.000	
459	150	253	0.996	1.004	
448	150	190	0.988	0.995	
463	150	126	0.982	1.011	
446	150	126	1.000	1.006	
479	200	380	0.998	1.024	
497	200	380	1.003	1.005	
497	200	380	1.015	0.995	
481	200	316	0.985	1.000	
467	200	253	0.997	1.009	
485	200	253	1.004	1.000	
493	200	190	0.983	1.002	
470	200	126	0.992	1.018	
483	200	126	0.977	1.019	
477	200	126	1.000	1.042	
439	225	380	1.004	1.028	
435	225	316	1.002	1.024	
440	225	253	0.978	1.000	
427	225	190	1.011	1.048	
428	225	126	0.982	1.042	
430	250	380	1.008	1.041	
432	250	316	0.992	1.003	
421	250	253	0.990	1.034	
415	250	190	1.000	1.055	
412	250	126	0.996	1.090	
424	275	380	1.000	1.015	
423	275	316	0.987	1.028	
412	275	253	0.994	1.030	
413	275	190	0.975	1.040	
N.S.	275	126	0.960	1.103	Referred to 190 gpm loop sample
761	250	380	0.999	1.003	
745	250	316	1.005	1.000	
793	275	380	1.015	No sample	
789	275	190	1.010	No sample	
790	275	158	0.999	No sample	
799	275	126	0.992	No sample	
792	300	380	1.002	No sample	
791	300	380	1.016	No sample	
783	300	190	0.996	No sample	
784	300	158	0.986	No sample	
795	300	126	0.975	No sample	

Table 3A

Conditions at Which Poor Slurry Suspension was Observed

Temperature °C	Flow Rate gpm	Circulating Concentration g Th-U/l
150	95	193
150	126	191
200	95	214
200	126	228
275	126	289
300	126	282

Table 3B

Conditions at Which Good Slurry Suspension was Observed

150	253	186
150	126	335
200	253	233
200	126	335
225	126	298
250	126	283*
275	190	278*
275	126	413*
300	190	274*
300	126	795

*Suspension was marginal for these cases.

The second half of the table gives the combinations of minimum flow and minimum concentration at which good suspension was observed. In general, higher flows and concentrations have been investigated. For the points designated as "marginal," the sample suggest that the suspension is in the transition range from the "good" to the "poor" type and that poor suspension would be confirmed at perhaps 10% lower flow or concentration.

The concentration gradients indicated at high flow rates by samples within the toroidal eddy are not believed to rule out the usefulness of this type of core design. The concentration distribution appears to be quite stable and reproducible.

EQUIPMENT PERFORMANCE

The high-pressure system equipment performance was satisfactory in this series of runs. The circulating pump lower bearing failed at the end of run SM-8. At the time of failure the pump had been operated for 3580 hr since its previous overhaul, of which 2950 hr were in slurry circulation. This represents normal operating life for the pump with its present bearings.

SLURRY BEHAVIOR

The slurry used in these runs was thoria containing approximately 8% uranium, fired at 1200°C after the uranium addition and having a mean particle size of approximately 2.3 microns. In runs SM-6 and SM-7 the slurry handled very well. The corrosion rate of the stainless steel during these runs was approximately 0.1 mpy. Degradation of the particles was extremely slow; there was no detectable change in the mean particle size, but there was a gradual increase in the fraction less than 1 micron.

In runs SM-8 and SM-9, in which both high and low pressure systems were used, a number of adverse experiences with the slurry occurred. Plugging occurred in the diaphragm feed pump heads and check valves, in the upstream lead to the vessel head meter, in one sample line, and in steam sparge lines connected to the dump tank. The plugs tended to be dilatant and would not yield to any differential pressure which it was considered safe to apply with the loop in operation. (In the case of the instrument line, for example, 2000 psi was applied while the system was at 750 psi; the 1250 psi differential pressure was ineffective in dislodging the plug.) Similar difficulties were experienced in the 200B test loop with the same type slurry(6).

Particle size behavior during runs SM-8 and SM-9 was similar to that in runs SM-6 and SM-7. No corrosion rate observations are available during these runs, because of several failures of valves isolating the high and low pressure sections of the system. In these failures, the valve plugs and seats were eroded severely and as much iron was picked up in a few minutes as would accumulate in several hundred hours of normal slurry circulation.

CONCLUSIONS

Successful slurry suspension was achieved in the 30-in. high-pressure test vessel over a wide range of flows, temperatures and concentrations, using polar re-entrant flow. Unsatisfactory suspension was encountered under some low flow rate conditions, and the limits of unsatisfactory suspension were partly delineated. The flow rate required to prevent unsatisfactory suspension increases with temperature and decreases with increasing slurry concentration.

Samples removed from the vessel consistently differed in concentration from samples of the slurry circulating in the external loop. A region of low concentration centered at the vessel equator, midway between the wall and the vessel center line, is indicated by the samples. Based on studies of the effect of orientation and sample velocity(5), it is believed that sampler performance partly accounts for the reduced concentration found in the vessel samples. However, study of the sample results indicates that there is probably some reduction in slurry concentration in this region. The existence of such a dilute region probably does not represent a serious hindrance to the successful application of a vessel of similar geometry as a slurry reactor core.

Thoria slurry containing 8% urania was used in these experiments. While this slurry appeared to handle quite well during the first 1700 hr of circulation (runs SM-6 and SM-7), it formed several intractable plugs in the two later runs and thus does not appear to be an acceptable material.

REFERENCES

1. Parsly, L. F. et al, "Summary Report of Slurry Blanket Mockup Runs SM-1-5," (in press).

2. Wichner, R. P., "Room Temperature Water Studies of the Conical Bottom Slurry Core Vessel," ORNL-CF-59-1-56 (Jan. 12, 1959).

3. Davies, O. L., "Statistical Methods in Research and Production," Oliver and Boyd London, 1947, Chap. 5.

4. Wichner, R. P.,"Some Thorium Oxide Studies of a Conical Bottom Reentrant Core Vessel," ORNL-CF-60-4-93 (April 28, 1960).

5. Wichner, R. P.,"Some Experiments on the Accuracy of Thoria Slurry Samples," ORNL-CF-60-4-93 (April 21, 1960).

6. Spiewak, I. et al, HRP Quar. Prog. Rep. Jan. 31, 1960, ORNL-2920, p 39.

Distribution

1-3. DTIE, AEC
4. M. J. Skinner