[redacted]

OAK RIDGE NATIONAL LABORATORY

operated by

UNION CARBIDE CORPORATION

for the

U.S. ATOMIC ENERGY COMMISSION

ORNL-TM-369

28

MA[illegible]

DRAFT

TECHNICAL PROGRESS REVIEW

NUCLEAR SAFETY

VOLUME 4, NO. 2

NOTICE

[redacted]

[redacted]

[redacted]

OAK RIDGE NATIONAL LABORATORY

OPERATED BY

UNION CARBIDE NUCLEAR COMPANY

UNION CARBIDE

POST OFFICE BOX X
OAK RIDGE, TENNESSEE

October 5, 1962

To: Distribution Listed in ORNL-TM-369

A draft copy of Nuclear Safety, Vol. 4, No. 2, is being transmitted to each Technical Information Panel member, as well as to others concerned with the review for patent, classification, and administrative matters. If you have any comments or criticisms concerning the contents of this issue, please send copies to Mr. Thomas W. Hazard of DTI and Mr. H. F. Carroll of Declassification and to me. Inasmuch as the final draft of this issue is scheduled to go to press early in December, your comments will have to be received by November 31 in order to be considered for inclusion in the final publication. Mr. Hazard's and Mr. Carroll's addresses are as follows:

Mr. Thomas W. Hazard
Industrial Information Branch
Division of Technical Information
U. S. Atomic Energy Commission
Washington 25, D.C.

Mr. H. F. Carroll
Declassification Branch
Division of Classification
U. S. Atomic Energy Commission
Oak Ridge, Tennessee

Yours truly,

Wm. B. Cottrell by AWS

Wm. B. Cottrell
Editor, Nuclear Safety

[redacted]

[redacted]

ORNL-TM-369

Contract No. W-7405-eng-26

DRAFT

TECHNICAL PROGRESS REVIEW
NUCLEAR SAFETY

Volume 4, No. 2

Prepared for U. S. Atomic Energy Commission
by Oak Ridge National Laboratory

DATE ISSUED

OCT 16 1962

OAK RIDGE NATIONAL LABORATORY
Oak Ridge, Tennessee
operated by
UNION CARBIDE CORPORATION
for the
U. S. ATOMIC ENERGY COMMISSION

[redacted]

FOREWORD

This quarterly journal is one of a series of Technical Progress Reviews prepared by the Oak Ridge National Laboratory at the request of the Division of Information Services, U. S. Atomic Energy Commission. This Review is intended to assist those interested in keeping abreast of significant developments in the field of nuclear safety. Nuclear Safety is not a comprehensive abstract of all literature published in this field during a given quarter, but rather a mechanism for presenting concise reviews of selected subjects as prevailing interest and available information warrant.

Coverage of the Review is limited to topics relevant to the analysis and control of hazards associated with nuclear reactors, operations involving fissionable materials, and the products of nuclear fission. Primary emphasis is on safety in reactor design, construction, and operation; however, safety considerations in reactor fuel fabrication, spent-fuel processing, nuclear waste disposal, and related operations are also treated. Safety in the use of radioisotopes in industry, medicine, and research is excluded, as are most topics considered the province of health physics. Even with these exclusions, nuclear safety cuts across such diverse fields as nuclear physics, solid-state physics, mechanics, chemistry, meteorology, geology, seismology, metallurgy, law, and nearly all branches of engineering. The authors will therefore review material from these fields which, in their opinion, has a direct bearing on nuclear safety.

Three distinctly different types of articles may be found in this issue of Nuclear Safety. In addition to the usual reviews of current literature and special review articles on specific topics, this issue

contains the second of a new series of feature articles. The feature article is a solicited monograph by a nationally recognized expert on particular topics of interest selected by the editors. We are pleased to continue this new feature with an article on Reactor Safety Instrumentation by M. A. Schultz.

Except for the addition of the feature articles, the content and scope of Nuclear Safety are unchanged. The special articles permit discussion of pertinent subjects that cannot be adequately considered by reference to only the current literature. The current review articles, however, constitute the major portion of this publication. All incoming literature (including reports, books, American and foreign technical journals, and transactions) is examined for subjects within our area of interest. This material is collected, grouped, and reviewed by experts. With the possible exception of the invited articles, interpretations in any article represent the opinions of the editors, who are employees of the Oak Ridge National Laboratory. Readers are urged to consult the references to original work for more complete information.

It is recognized that the critical evaluation of subject areas leading to the determination of criteria cannot fail to stimulate contrary opinions. This is expected to be particularly true in the area of nuclear safety, since in many instances only preliminary information is available, the ramifications are many and varied, and opinion and judgment must be relied upon so heavily. While the editors do not propose that the pages of Nuclear Safety act as a clearing house for safety correspondence because of the above facts, we have had for some time a policy which would permit the publication of statements of position at variance with

those expressed by the editors. Such statements will be published after the editors have ascertained that a real difference exists and that the position is reasonable.

In addition to the invited contributors, many members of the Oak Ridge National Laboratory staff wrote review material, reviewed manuscripts, or otherwise contributed to this publication. Their contributions are gratefully acknowledged.

W. B. COTTRELL, Editor
W. H. JORDAN, Associate Editor
F. T. BINFORD, E. E. GROSS, C. E. GUTHRIE,
W. De LAGUNA, A. W. SAVOLAINEN, and
C. S. WALKER, Assistant Editors, Oak Ridge
National Laboratory

[redacted]

TECHNICAL PROGRESS REVIEW

Nuclear Safety

Foreword ii

Feature Article 1

Reactor Safety Instrumentation 1

References 27

I. General Safety Criteria

Atomic Energy Regulation by States 35

Emergency Actions in Radiation Accidents 61

Nuclear Ship Site Criteria 72

References 79

II. Accident Analyses

Loss-of-Coolant Accidents in Gas-Cooled Reactors 84

In-Pile Loop Hazards 105

Argonne Transient Reactor Test Facility 118

SPERT Program Status Report 127

Combustion of Reactor Materials 141

References 152

III. Control and Instrumentation

The Design of Safety Systems for Nuclear Reactors 163

Experience with NRX and NRU Safety Systems 182

References 189

IV. Plant Safety Features

Radioactive Plant Maintenance 191

Reactor Coolant Cleanup 207

[redacted]

Removal of Radioiodine from Gases 218

References 227

V. Consequences of Activity Release

The Area Within Ground-Level Isopleths 242

Estimation of MPC Values for Mixtures of Radionuclides 246

Selection of Samples for Area Monitoring 256

Environmental Contamination Around Nuclear Facilities 266

Operating Practices in Contaminated Clothing Laundries 275

Ruthenium: A Special Safety Problem 281

References 288

VI. Current Events

SM-1 Pressurized-Water Reactor Operating Experience 296

Abnormal Events in the Operation of the AE-6, Water Boiler Research Reactor 303

Book Review: Nuclear Power Safety Economics 311

Changes in Licensing Regulations 314

Action on Reactor Projects by Licensing and Regulating Bodies 317

Safeguards Reports and Selected Reading 333

References 335

(Feature Article)

REACTOR SAFETY INSTRUMENTATION

M. A. Schultz

Early Philosophies

Reactor safety instrumentation may be defined as any instrumentation or ciruitry capable of shutting down a reactor either directly or indirectly. In general, the safety instruments form the so-called "scram circuits."

Early ideas of protecting a reactor through external instrumentation and subsequent implementation by control rod movement were properly based, first, on the possible malfunctioning of the operator, and, second, on the malfunctioning of the reactor or equipment. The best example of the "permissive" type of operation that resulted is in the operation of LITR-MTR safety system.[1] Rods are permitted to be pulled only if certain interlocks are first cleared. In startup, as long as the period is greater than a preset value, rods can be moved out of the core. If the period becomes shorter, rod motion is automatically stopped. If the period becomes still shorter, rods are automatically inserted into the core at their normal speed. And finally, if the rising power level is not satisfactorily restrained by these methods, the rods are inserted violently in scram. The operator is then permitted to move rods within these preset period limits. In a similar sense, the early overpower nuclear-trip-channel instrumentation also did not permit the operator to run the reactor at excessive powers above predetermined values.

The problem of reliability of automatic instrumentation arose almost immediately, and some of the early developments in this area are illustrated

by the safety design approach used in the naval reactor program. Here it was immediately recognized that the basic nuclear detectors were the weakest link in the protection chain. Ion chambers, fission counters, and neutron proportional counters consisted mostly of laboratory glassware, unsuited either for the stringent task of continuous reactor protection or, worse yet, for military operational reliability.

Multiple-channel instrumentation systems developed by the simple logical argument that if one detector channel were unreliable, two channels could be used. This argument was immediately caught in the syllogistic trap that if each channel were equally unreliable, which should be believed. The problem was resolved by specifying three identical instrumentation channels for each function, and, if any two read alike, there was strong evidence for presuming that these two were giving correct information and functioning properly.

This simple-minded reliability philosophy took root, and reactor instrumentation designs for all types of reactors rapidly began to sprout multiple instrumentation containing nine or more channels. Three channels were assigned to low-level source instrumentation, three to the intermediate- or period-range instrumentation, and three to instrumentation at the operating power level. Two or three more channels were sometimes added for the sole function of measuring reactor overpower and shutting down the reactor if a preset level were reached. No consideration was given to the fact that in many power reactors, startup occurred infrequently compared with the number of hours of operation.

With time and large amounts of development work, nuclear detectors were considerably improved, until it was generally conceded that the

nuclear detectors were far more reliable than the conventional detectors used to measure temperature, pressure, level, etc. In the naval reactors and their stationary power plant descendents, multiple-channel instrumentation of the type described above was used, but the reasoning behind its use became more complex and sophisticated. First, it was recognized early that real safety factors could be obtained by placing the instrumentation channels in coincidence or by auctioneering the output of period signals. Coincidence logic, whereby two out of three signals indicating danger were required to initiate a shutdown, obviously provided better protection and minimized false scrams. Period signals were dynamic, changing signals, and if the fastest moving signal was selected by auctioneering, this was a safe condition that also gave improved operation in comparison with instrument breakdown signals, which were usually static. Elementary logic indicated a lesser use factor for startup information on power reactors. Consequently, an unwritten standard gradually evolved whereby two source channels, two period channels, and three power operation channels became the minimum satisfactory instrumentation for most power and test reactors.

Reliability

The multiple-channel instrumentation systems obviously were a source of considerable expense and a potential problem in the attainment of economic nuclear power. Some mathematical means was clearly needed to tie redundancy to reliability and safety to economics. Investigators at Atomic Energy of Canada, attempted the latter when, in an intriguing analysis, they compared safety and economics in the nuclear industry with the

same factors in other industries. They attempted to place a dollar value on a life lost in several industries in order to obtain a price that might be reasonably paid for safety instrumentation, confinement, and other nuclear safety features. Their arguments were not widely accepted for two reasons. First, owners of reactors were not willing to accept the risk of a statewide incident at any price, and, second, the price of nuclear instrumentation rapidly dropped from the $1,000,000 per plant class to the $100,000 per plant class in the period 1955 through 1961. Thus, in the instrumentation field, the cost of redundant instrumentation could not appreciably affect large plant economics.

In 1957, Jacobs[2] attempted, by use of mathematical logic, to indicate the added protection and the incidental deleterious side effects that would be obtained from multiple-channel instrumentation. He developed a figure of merit to be evaluated as a function of logical design configuration and presumed operational constants. This work with safety channel control connections was done for the Dresden Reactor.

Three types of faults were considered. One was a genuine reactor excessive power level on which the reactor must be scrammed. The second was an equipment operational fault that would prevent a safety channel from scramming on excessive power and which would not be revealed to the operator until the channels were tested. The third fault was a spurious instrument fault that would cause a scram when the power level was not excessive. Table 1 summarizes Jacobs' results for various contact-logic schemes.

An attempt to put numbers into these statistically derived formulas is summarized in Table 2. Two sets of input figures were used. The first

Table 1. SUMMARY OF JACOBS' RESULTS FOR VARIOUS CONTACT-LOGIC SCHEMES[a]

Type of Circuit Arrangement	Output Circuit Logic Connections to Scramming Magnets	Rate of False Scrams	Figure of Merit: Total Time Between Circuit Tests Divided By Unprotected Time Between Circuit Tests
1. Single channel	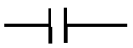	F_s	$\frac{2}{F_o\tau}$
2. Two channels, series contacts	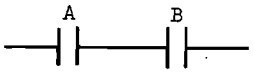	$2F_s$	$\frac{3}{F_o^2\tau^2}$
3. Two channels, parallel contacts	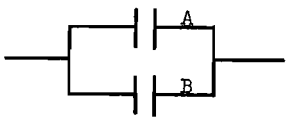	$2F_s^2t_r$	$\frac{1}{F_o\tau}$
4. Four channels, one series pair in parallel with second series pair	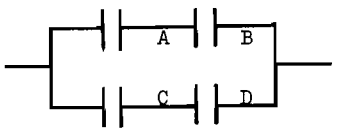	$8F_s^2t_r$	$\frac{3}{2F_o^2\tau^2}$
5. Three channels, two out of three coincidence	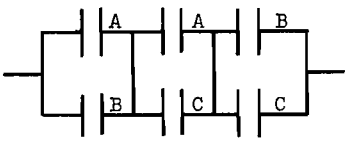	$6F_s^2t_r$	$\frac{1}{F_o^2\tau^2}$
6. Four channels, two out of four coincidence	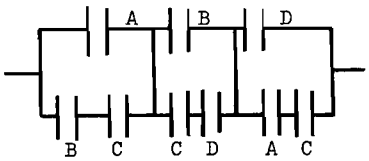	$12F_s^2t_r$	$\frac{1}{2F_o^3\tau^3}$

[a]The letters A, B, C, and D represent the output scram-actuating contacts of separate, independent safety channels. The terms have the following meanings:

F_s = average rate of spurious faults in a single channel,

t_r = time taken before the cause of a spurious fault in one channel is found and the contacts reset,

F_o = average rate of operational faults in a channel which would prevent a genuine scram in a real emergency,

τ = the time interval between testings (to find operational faults).

was Jacobs' assumed set for Dresden (before operation), and the second set was an approximation of the WTR operating numbers. In practice, both reactor designers chose a variation of circuit number 5 of Table 1, which is a two out of three coincidence arrangement.

The data of Table 2 indicate that, although the WTR would be expected to have fewer false scrams than the Dresden reactor, its safety figure of merit was considerably smaller because of the comparatively long time interval between circuit testings. A glance at the actual magnitudes of the numbers involved indicates that something is missing in this type of analysis. For example, the statistics show that the WTR should have expected a false scram rate of 0.001 per year (0.00036 × 3 channels) caused by the safety instrumentation and its logic. The actual number of false scrams per year ranged, however, between 5 and 20, and thus the safety instrumentation could hardly have been the cause of most of the false scrams. The absolute figure of merit is, of course, uncheckable, but the large discrepancy between the approximate and the absolute false scram rates leaves the figure of merit open to question.

There are several reasons why bare statistical reasoning based on the safety circuit logical configuration is far from enough for determining real safety. Ditto, in a review of Jacobs' article,[3] points out a few of the limitations. First, there is the question of independence of instrument channels. If the safety channels are not completely independent, or if they are all identical and have the same built-in fault, the above-mentioned statistics do not hold. As will be mentioned again later, Siddall[4] proposed using channels in coincidence that operate from completely different parameters and have completely different circuitry in order to avoid this problem.

Table 2. EVALUATION OF CIRCUIT ARRANGEMENTS

Type of Circuit Arrangement (See Table 1)	Assumed Dresden Constants[a]		Approximate WTR Constants[b]	
	False Scrams per Year	Figure of Merit	False Scrams per Year	Figure of Merit
1	12	1,096	1	24
2	24	901,500	2	432
3	0.00548	548	0.00012	12
4	0.0219	450,750	0.00048	216
5	0.0164	300,500	0.00036	144
6	0.0323	82,400,000	0.00072	864

[a]Assumed Dresden Constants:

F_s = spurious faults per year (per controller),

F_o = 2 operational faults per year (per controller),

t_r = 10 min reset time,

τ = 8 hr between testings (once per shift).

[b]Approximate WTR Constants:

F_s = 1 spurious fault per year (per controller),

F_o = 1 operational fault per year (per controller),

t_r = 30 min reset time,

τ = 30 days between testings (once per reactor operating cycle).

Ditto's second point is that coincidence, if it is to be used successfully, must be carried deeply into the control system design and not just used in the output stages of the safety instrumentation. One wrong flow meter outside of the coincidence system could destroy the entire logical design.

Ditto makes a third point that is the heart of the argument. Jacobs assumes that testing the circuits once a shift will enable the operator to determine that everything is working properly. Several questions immediately arise. First, is the test valid? Does it really check the entire circuitry from neutrons to scramming? Do the checks ensure against

all possible reactor faults? Are the tests subject to operator interpretation? (More about this point later.) Are some of the tests doing more harm than good? (For example, the WTR operating procedure based on licensing requirements called for actually measuring rod scramming time before each operation cycle. When the rods were later removed, it was found that many of the rod dashpots were actually worn out from the incessant testing.) Since the Jacobs' formulas indicate that greater safety results from more frequent testing, all these limitations must be examined most carefully.

The true situation with respect to false scramming must, of course, somehow take the human element into account. An analysis of reactor scramming in any given reactor will show that false scrams result from human error far more often than instrument failure error. Someone always seems to be turning the wrong knob.

Brookhaven System for Circuit Checking. Because the basic statistical reliability argument depends on how the circuits are checked and how often, it is pertinent to examine some of the checking schemes in use or proposed. Figure 1 shows a block diagram of the principal features of the checking system employed at Brookhaven National Laboratory's Graphite Research Reactor, the Medical Research Reactor and specified for the High Flux Beam Reactor now under construction. This system, which was originally described by Binns et al.[5] in 1957, has worked quite well. It employs vacuum tubes and conventional relays. Monitoring is not fully automatic, but, rather, it depends on the operator to observe and interpret the charts of two monitoring recorders.

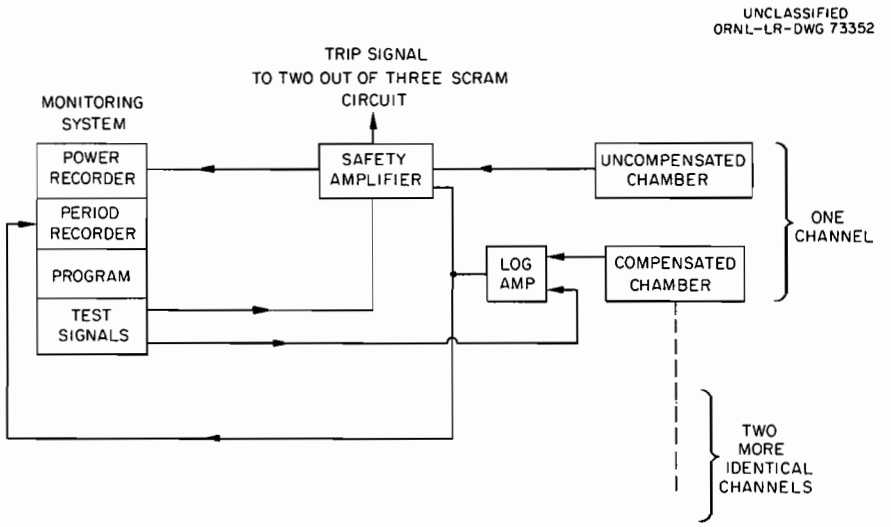

Fig. 1. Safety Circuit Checking System Used at Brookhaven National Laboratory.

It can be seen from Fig. 1 that three identical dual channels are used. Each channel consists of a linear power signal and a period signal obtained from a compensated pair of chambers and a logarithmic amplifier. A trip point is established by a combined power and period signal such that a short period causes a trip at a lower power level than does a longer period. Similarly, power level affects period tripping. A channel trip is caused when

$$\frac{T'}{T} + \frac{P}{P'} > 1 \quad ,$$

where T' is the normal trip period when $P = 0$ and P' is the normal trip level when $T = 0$. Although there have been physical arguments to the effect that it is more difficult to obtain short periods at high power levels than at low power levels,[6,7] the formula given above sets up a conservative safe tripping point.

The monitoring system is controlled by a programming timer arrangement such that the monitoring power and period recorders are sequentially switched from dual channel to dual channel every 20 min. The absolute power and period outputs of each channel can thus be visually compared on the recorder. Five minutes after the recorders are switched to a given channel, a power-level test signal is switched into the input of the safety amplifier and the logarithmic amplifier. The channel is tripped by the test signal and the tripping level is marked on the recorder.

Similarly, 10 min after the recorders have been switched to a new channel, an exponential test signal is applied to the input of the logarithmic and safety amplifiers, and the period portion of the trip is

checked and noted on the recorder. Five seconds before each test, the alarm and scram annunciators are disconnected to avoid false alarms.

This system checks only the basic channel electronics; it does not check the ionization chamber and the cables at the front end of each channel. Further, it does not check the output logic circuits and the scram magnets at the output end of the process. It may be argued that these input and output circuits may be designed and constructed in a supercareful manner and thus do not need checking or that separate circuits and checks may be used to determine the status of the front and back ends of the system..

Binns et al.[5] have suggested the use of a poorly filtered power supply to supply dc voltage to the ionization chambers. In this manner, the power supply ripple would feed down the cable to the chamber, across the electrodes of the ionization chamber, and up the signal cable. A ripple-frequency filter and a rectifier-relay circuit could then be used to determine whether the circuit was intact. A change toward a short or an open circuit anywhere in the system would be indicated in the monitoring system, and, in practice, the main-channel instrumentation would also indicate a different power or period reading.

In summary, the Brookhaven system employs frequent testing of the electronic circuits, each channel being checked once each hour. The complete channel from neutrons to scramming is not checked, and some reliance is placed on operator interpretation and judgment. The system uses vacuum tubes, is inexpensive, and, with careful training and retraining of operators, appears to work well.

Early Canadian Checking Systems. Canadian developments in reactor safety circuits paralleled and frequently led U. S. work. Their early

concern with safety led, at first, to unworkable overprotection of the NRX reactor. Scramming circuits were placed on such a large number of functions (at first numbering in the hundreds) that the reactor could not be operated because it was often shut down by minor troubles in the instruments and electrical circuits. Redundant circuits were then devised, and the limitations of pure multiple circuitry were quickly recognized. Redundant circuits plus coincidence appeared to provide the answer in that two out of three coincidence enabled one channel to be checked while the reactor was kept on the line and protected by the other two channels. By 1957, in time for the NRU reactor design, Siddal[4] had reached the same conclusions as had been drawn at the Brookhaven and Oak Ridge National Laboratories at the Naval reactor development sites in the U. S. and had gone a few important steps further.

First, he recognized the desirability of utilizing testing circuits that checked as much of the system as possible. Figure 2 shows one of the Canadian circuits for checking the scramming logic past the point where the Brookhaven testing stopped. Here a small resistor R is placed essentially in series with the power supply to the scram magnet and the channel output contacts. The logic requires that two out of three sets of contacts drop out to de-energize the scram magnet. A current-indicating meter is placed in the circuit to read the magnet current continuously. In the event one set of contacts opens, such as would be the case in testing a single channel, current must also flow through R, and, consequently, the magnet current is reduced by a small amount, about 10%. This small current change would not cause a rod to scram but would be a relatively positive indication that a set of contacts had opened.

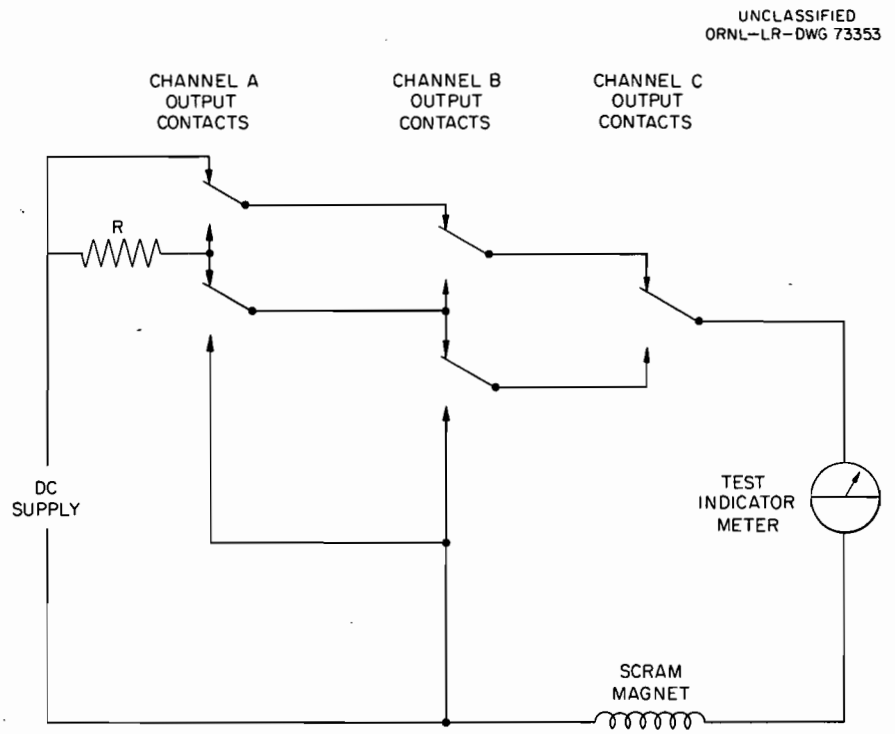

Fig. 2. Circuit for Checking Scramming Logic (see ref. 4).

Second came the previously mentioned realization that all three channels must be independent and not contain identical built-in faults. Siddal got around this problem initially by providing two sets of three channels in two out of three coincidence, each set working from independent information, and each set usually operating independent scramming mechanisms or valves.

The need to check the ionization chambers, cables, and preamplifiers in connection with the entire system was subsequently recognized both at Chalk River and Oak Ridge. An elegant scheme of placing a movable cadmium shutter between the chamber and the reactor was next devised. The shutter provided only a partial attenuation of the neutron flux such that when the shutter was in front of the chamber sufficient signal could be obtained to allow the system to operate normally. In the test condition, the shutter was removed, and a sufficiently greater signal was obtained to create a trip signal in the channel under test. Thus a channel could be tested with the reactor operating and protected, and the channel test would include all components from neutrons to the final scramming magnet. Only the scramming magnet was common to the three channels, and a relatively good indication of its performance was obtained by the current-indicating meter.

In 1956, Rowell and Van Rennes[8] suggested completely automatic testing. In this way timing and programming of channel tests could be accomplished at any time interval desired. The test output indicator would contain circuitry to sound an alarm if the system did not check properly.

Checking System Development at Oak Ridge National Laboratory. Considerable work along these same lines was accomplished at ORNL, and a

checking system that included the scramming magnet was developed.[9] A coincidence magnet was devised that consisted of three independent windings and a magnetic shunt. Each winding is fed from a separate measuring channel either through a safety amplifier or from a power supply and set of contacts. With current available from only one winding, magnetic flux is sent only through the shunt. With current in two coils, the shunt is saturated, and a useful force is developed in the load. With current in three coils, the yoke of the magnet saturates, and the useful force is only slightly increased. Thus, current through any two coils is sufficient to hold a scramming rod, and the third coil may be tested with impunity while the reactor is on the line.

Many other major contributions to safety have been made at ORNL. Epler[10] has constantly pointed out that, regardless of the elaborateness of circuit testing and redundancy, a failure of the entire safety system might occur that would not be detected by the testing system. These failures are called systematic failures and would be caused either by improper design of the safety system or by the system not being designed to take into account all possible physical events surrounding the reactor. As an example, the HTR3 incident resulted when an improperly designed power supply for an ionization chamber saturated at high input signal levels and actually caused the output current to decrease at high power levels. The ionization chamber fed the safety system and the automatic control system, and consequently the automatic control called for pulling out the control rod further when high power was reached; partial meltdown ultimately resulted.

Epler has indicated that for systematic instrumentation failures of this sort the checking system would not disclose the difficulty. He concludes that the safety system, the manual control system, and the automatic control system should not be coupled together in that they all then received the same erroneous information and the operator knows no more than the automatic control. This logic is used as the basis of ORNL safety design in that the safety system must be completely independent of all other functions. Strenuous efforts are then made to avoid any form of coupling between the safety system and any other system.

Most reactor installations do not follow the practice of complete independence of the safety instrumentation. First, this step usually leads to a larger number of instrument channels. Second, in the event the inferred systematic error is the result of an instrument design error, such as was the case of the HTR3, the safety channel might also be designed to give erroneous information. The ORNL philosophy is quite compatible with Canadian philosophy in that, as mentioned, Siddal stresses the use of many independent sources of information from various kinds of detectors located in different places and operating separate and different scramming circuits.

An essential point to be made from the ORNL work is that, regardless of how much assurance is received from the checking circuits that the safety instruments are operating properly, there always remains the annoying, gnawing possibility that the instruments will not catch all the possible physical situations which may arise.

Although the statistical approach being described indicates the need for frequent or self-checking of the safety instrumentation, it is necessary

to point out that all authorities do not subscribe to this approach. At the Sixth Tripartite Instrument Conference[11] in April 1959, it was suggested that self-checking had the disadvantages of being complicated and requiring a considerable amount of extra equipment. An alternate scheme of turning the high voltage off and on at the ionization chambers and observing the charts was proposed as a suitable operational check. This method has the advantage of simplicity but places high reliance on operator ability and procedures.

Transistorization

The previously mentioned developments have been mostly improvements in safety philosophy with little regard to the specific means of accomplishing the philosophically or statistically desirable objectives. The principles work, and there has been little incentive to improve them. The advent of transistor circuits, first used in reactor safety systems about 1957,[12] has changed not only the circuit details but is slowly forcing basic philosophy changes as well. In the last four years, nuclear control and safety systems, with only one or two exceptions, have been specified as transistorized or to have solid-state circuitry. This trend has been very real, regardless of merit in each instance.[13] The marketing facts seem to be that reliability has been stressed as one of the transistor's chief claims to fame. Although clearly documented proof of transistor reliability in nuclear safety applications is not available, computer usage studies[14] predict transistor failures of 1 in 3,200,000 hr, as compared with tube failures of 1 in 15,000 hr. Actual experience with partially or completely transistorized reactor control systems appears to have been quite satisfactory.

The use of the transistor in safety circuits has much to recommend it, but it should be pointed out that the transistor's back current limitation is approximately 10^{-8} amp, which limits its dc amplification possibilities without some elaborate form of ac modulation. In any case, the transistor's performance does not approach that of the electrometer tube, which can easily handle 10^{-14} amp or better. Nevertheless, a trend has been established toward all-solid-state systems, including the detector, regardless of inferior performance in certain parts of the system.

The fundamental reasons for using transistors in safety systems have been presented as follows:[15] (1) The protection problem is essentially a switching problem. Solid state devices are admirably suited for on-off situations. (2) The two out of three logic, which, as we have seen, has been developed to a high degree of justification, could be handled easily by solid-state logic systems, and this justification can also be extended. (3) There is no significant evidence of acceleration of component deterioration because of on-off switching of solid-state components. This statement means that checking circuits can be built that operate in microseconds, if needed, and an entire system can be tested and faults located in less than 1/100th of the time necessary to find a fault in a nonsolid-state system. High-speed testing of mechanical relays contributes quickly to their failures, whereas, as indicated, high speed does not affect solid-state relays.

The basic argument for transistorization can thus be simplified with the statement that if the statistical necessity for frequent testing is believed, either manual off-line testing or automatic on-line testing can be accomplished faster and more reliably with all-solid-state components.

It will be noted that the weakest link in the chain now becomes the magnet or scram actuator because these electromechanical or mechanical devices simply cannot operate at the speed of the solid-state relay systems.

Many transistor systems and circuits are currently available.[16-18] Figure 3 shows a generalized form of solid-state output logic that is commercially available. System testing is accomplished by the insertion of pulses at the input of each channel. The output of each significant portion of the circuit is read in sequence, memorized or stored, and then displayed as often as desired. Testing signal trains of 20 kc are frequently used. The final output relay becomes a silicon-controlled rectifier.

Future Trends in Reactor Safety Systems

Although improvements in safety systems beyond the philosophies available in 1958 have been only in circuitry detail, the absolute sweeping of the field by the transistor leaves little doubt as to some of the future trends. Transistorization will become more complete, and because the transistor is most applicable as a digital device, digital control of reactors will ultimately fully emerge. The outline is already clear. Digital data acquisition is currently used in some reactors, and digital data-logging systems are common. At the Pittsburgh Meeting of the American Nuclear Society on the Role of Computers in Nuclear Power Plants, February 1962,[19] it was brought out that approximately 50 conventional power plants were installing or had installed complete digital-computer-controlled systems. These systems were being installed on an economically justifiable basis. It seems obvious that similar justification will soon be made for digital computer control of large nuclear power plants.

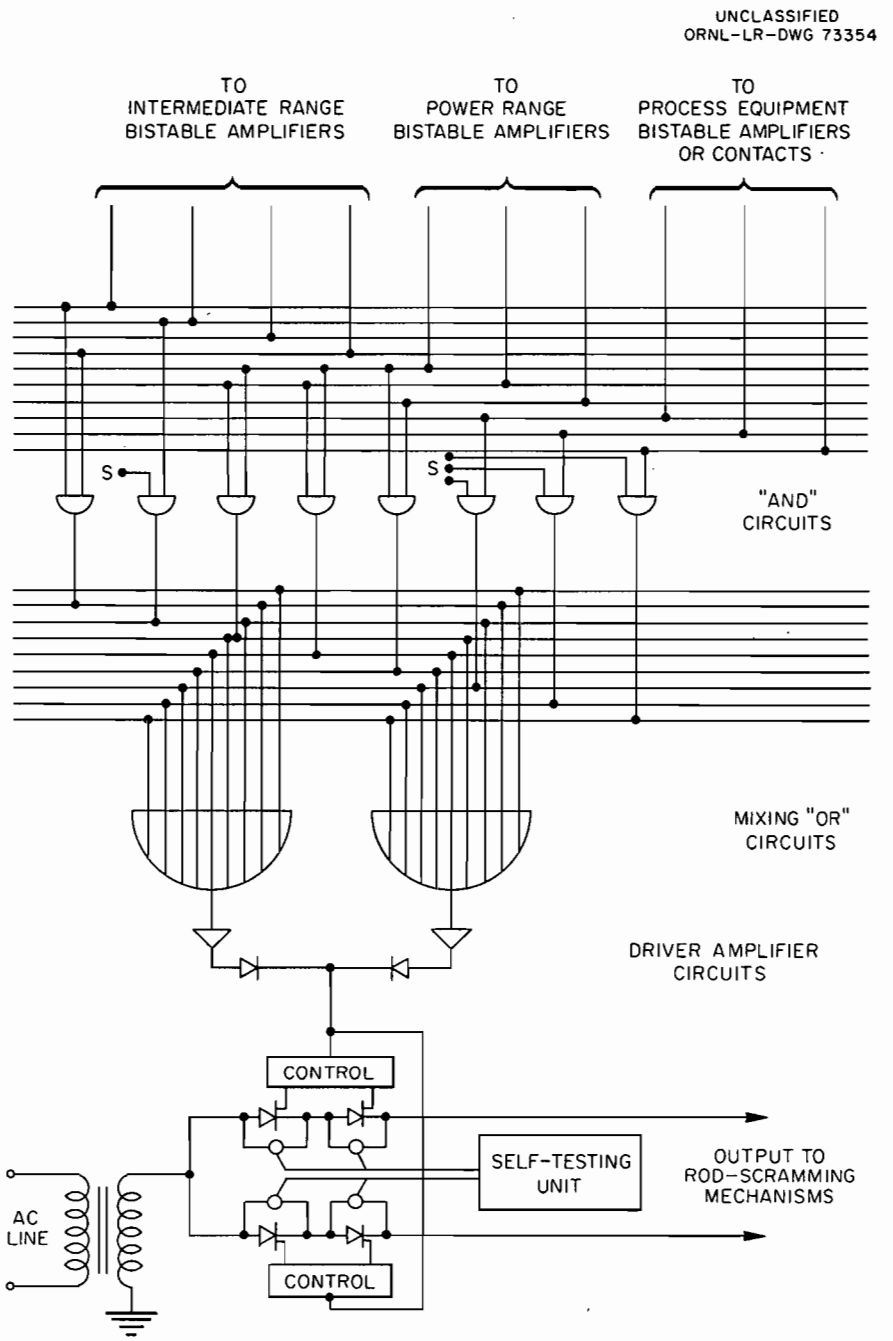

Fig. 3. Generalized Form of Solid-State Output Logic.

From a reactor point of view, digital circuits originated in the nuclear aircraft programs where light weight could be used as an argument.[20] From a nuclear safety point of view, however, the opening wedge toward the completely digital type of on-off circuitry was made by Pearson and Lennox[21] upon examining the results of three years of operation with Canadian philosophies and circuits. Their examination showed that although the two out of three coincidence type of circuitry provided the required protection, the fault rate and service calls were extraordinarily high. They discovered that a judgment was involved by the operator as to whether a channel was operating properly. If the operator judged that a channel was not properly working, it was removed and repaired on a routine basis. In many instances, removing and repairing were not really necessary and contributed to the need for removing and repairing the channel again. In other words, the constant handling and routine adjustment did not contribute to the reliability of the equipment. They conclude: "Instrumentation must be designed that does not require routine adjustment to maintain its reliability. To date, instruments have been designed with the hope that failure will occur slowly and that checks will disclose them at an early date. We are suggesting that catastrophic failure is more desirable, in which case a very clear-cut story evolves and repair can be prompt."

It appears therefore that on-off nuclear channels have become essential for reactor safety and that operator control and analog control cannot compete. It is argued that the operator cannot be made to interpret properly, regardless of how well he is trained, and, besides, as the record shows, the operator always makes the mistake that scrams the reactor. The digital computer can fail, but it will not make a mistake. When it fails, it will fail safely and decisively, and the trouble can be easily found.

The trend toward digitalization of nuclear power plant control will undoubtedly continue on a slow and economically sound basis. The popular trend in all large industries is in this direction, and, undoubtedly, the nuclear industry must ultimately follow. A few lone voices have been raised against this trend, however, and they are important if only because they will control the pace at which digital control will be accepted.

Hanauer[9] has described a new version of the movable instrument system[6] that can be used for control and safety or for control in conjunction with independent safety circuits. Figure 4 shows a block diagram of the system, which can use solid state electronic devices. It can be seen that one channel is used from startup through the power range. The operation of the circuit is such that the detector usually operates in a constant neutron flux. At startup, the detector position is fixed until a preset counting rate is reached. As the power level increases, the detecting instrument moves further away from the reactor to maintain a fixed counting rate. The output of the ratemeter is compared against a reference signal, and if the demanded reference signal is not matched, a servo system proceeds to reposition the detector. In this manner, detector position becomes a measure of neutron flux, and under suitably tapered conditions, the rate of change of detector position becomes a measurement of period. If the servo system is not fast enough for the hypothesized periods, Hanauer uses a signal derived from the logarithm of the counting rate in comparison with the position-derived logarithm of the flux to indicate the true period.

Analog self-testing of this type of circuit can be accomplished by wobbulating the reference with a small, low-frequency signal. This method

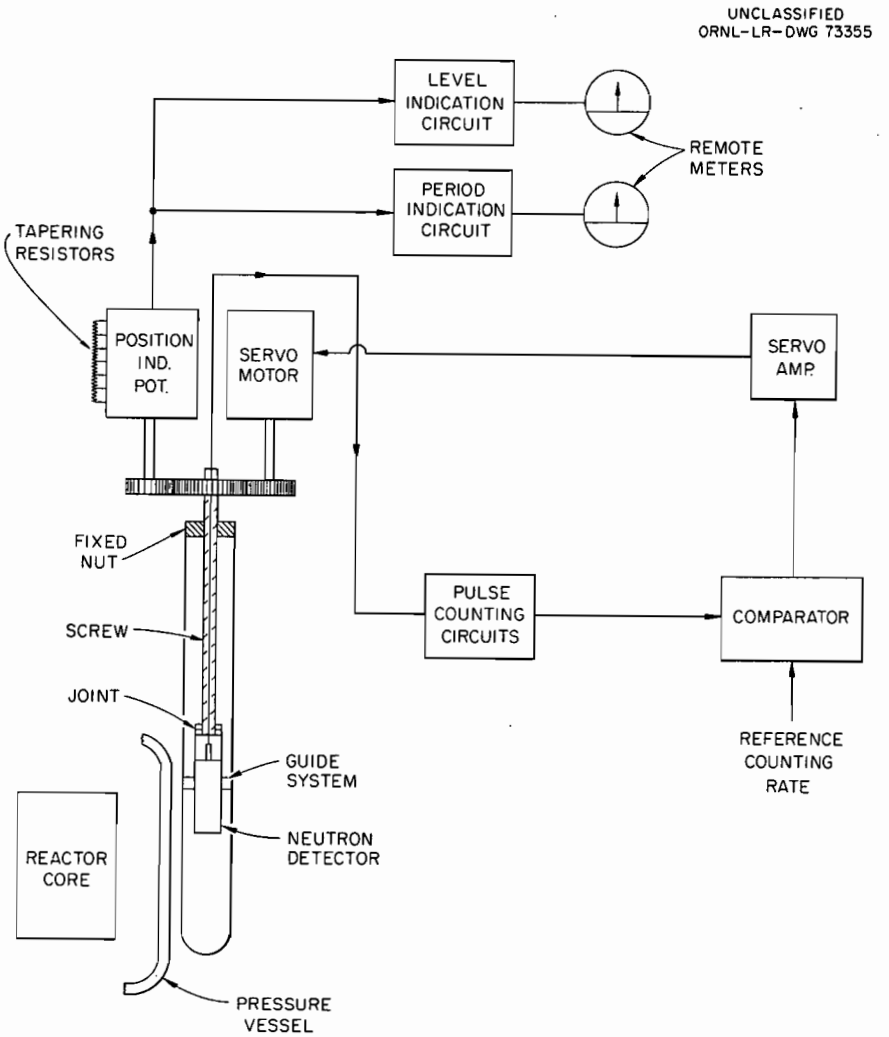

Fig. 4. Movable Safety Instrumentation (see ref. 9).

continuously tests the entire system, and proper channel operation can be detected either automatically or by manual observation of a power-level chart.

Hanauer's system is important because with it the number of instrument channels required to run a reactor can be greatly reduced. In the ORNL philosophy, two or three of these movable channels in conjunction with two or three independent safety channels are all that would be needed from reactor startup to full power operation to give complete period and power-level protection. If the designer is convinced that no systematic faults can exist with his movable channel and reactor operation, then three movable channels in two out of three coincidence with detector position limit stops for overpower become sufficient. In either case, the economics of the movable-channel instrumentation are favorable, and the simplicity of this analog system is such as to cause the reactor owner to hesitate and ask, "Why digital instrumentation?"

A side issue should be mentioned when making predictions of futher trends. The question should be asked "What is the trend in the communications industry?" Nuclear control in the past has always borrowed heavily from the communications industry. The transfer-function concept on which most present-day reactor stability and operational safety studies are made was derived directly from communications work. It is therefore reasonable to examine trends in communications system reliability. There is no problem with respect to the use of solid-state electronic devices. They clearly figure prominently in all future planning, but even though this industry presently relies heavily on redundancy, a recent interview with the designer of the highly successful Telstar satellite equipment,

R. H. Shennum,[22] brought forth the following interesting statement: "Our philosphy is different.... If it is a good system with high reliability it is better off without redundancy.... The television portion of Telstar is completely lacking in redundancy. A small amount of redundancy is seen in the command, and a little in the telemetry.... In my opinion, redundancy is merely a crutch...can create problems in itself.... And I don't think in most cases it improves reliability."

The two sides of this interesting argument are that the telephone company uses this nonredundant approach in conjunction with superdesigned and tested equipment. Underwater cable amplifiers are an example. Their apparatus is assembled and kept in dust-free, extraordinarily clean rooms and hundreds of components may be tested to find the one ultimately used. Also, quoting again,[22] "a small group of some 100 people...designed the antenna (for Telstar) alone."

Most smaller organizations attempting to work economically or larger groups operating with government funds use redundancy in satellite communications work. In the present nuclear safety and control field, there is no organization containing 100 people specifically assigned to any one phase of safety equipment. Complete control and safety designs must be accomplished in most cases by two or three people, and, consequently, multiple circuitry is substituted for multiple personnel. An all-out effort in, possibly, one of the national laboratories could produce a highly reliable single channel that might remove the need for redundancy. There is, however, no clamor or real justification for such an approach.

Another partially dissenting voice is heard from the advocates of reactor self-regulation. Grace and Schultz in the fiftieth anniversary

issue of the Proceedings of the IRE[23] predict considerably more work in inherent reactor control whereby reactors will ultimately possess self-control and be able to protect themselves against fast excursions. If this kind of reactor can be built, the need for reactor safety protection systems disappears, and the justification for digital-computer control rests only on the economics of the over-all plant operation. They conclude that some day a marriage of the self-regulating reactor and the completely automatic external plant will be made. Additional comments on this subject are available in references 24 through 61.

References

1. K. A. McCollom, Development of Reactor Instrumentation at the MTR, Proceedings of the Sixth Tripartite Instrumentation Conference Held at Chalk River, Ont., Apr. 20–24, 1959, Part 1, Reactor Instruments, Canadian Report AECL-801, April 1960.

2. Ivan M. Jacobs, Safety Systems for Nuclear Power Reactors, AIEE Transactions, Paper No. 57-906, July 24, 1957.

3. Redundancy and Coincidence in Reactor Safety Systems, Nuclear Safety, 2(4): 16–17 (June 1961).

4. E. Siddal, Safe and Reliable Reactor Protection, Nucleonics, 15(6): 124–129 (June 1957).

5. J. E. Binns, W. Lones, D. G. Pitcher, and M. Melice, Safety Circuit Development at Brookhaven National Laboratory, 2nd Nuc. Eng. and Sci. Conf., Paper No. 57-NESC-38, American Society of Mechanical Engineers, New York, 1957.

6. M. A. Schultz, Control of Nuclear Reactors and Power Plants, 2nd ed., chap. 11, McGraw-Hill Publishing Co., 1961.

7. H. W. Newson, The Control Problem in Piles Capable of Very Short Periods, USAEC Report ORNL-1857, Oak Ridge National Laboratory, April 25, 1947.

8. W. G. Rowell and A. B. Van Rennes, Control Engineering, 3(3): 79 (1956).

9. S. H. Hanauer, Automation for Reactor Startup and Operation, Symposium on the Role of Computers in Nuclear Power Plant Operation, February 24, 1962, Pittsburgh, Pennsylvania, Nuclear News, May 1962.

10. E. P. Epler, Dangers in Safety Systems, IRE Trans. on Nuc. Sci., NS-8(4): 51–55 (October 1961).

11. Proceedings of the Sixth Tripartite Instrumentation Conference Held at Chalk River, Ontario, April 20–24, 1959, Part 1, Reactor Instruments, Canadian Report AECL-801, April 1960.

12. E. J. Wade and D. S. Davidson, Application of Transistors to Safety Circuits, IRE Trans. on Nuc. Sci., NS-5(2): 44–46 (August 1958).

13. E. B. Hubbard, Factors Affecting Design and Sale of Transistorized Instrumentation, IRE Trans. on Nuc. Sci., NS-8(4): 127–129 (October 1961).

14. Scheneman and Waldorf, Electron Tube or Semi-conductor Device, Communication and Electronics, July 1960.

15. V. S. Underkoffler, J. L. Cockrell, and J. H. Magee, Nuclear Protective System Design for Reliability, IRE Trans. on Nuc. Sci., NS-8(4): 130–148 (October 1961).

16. R. T. Graveson and H. Sadowski, Transistorization of Nuclear Counting Circuits, IRE Trans. on Nuc. Sci., NS-5(2): 33–38 (August 1958).

17. J. D. Schmidt, B. K. Eriksen, and W. Peil, A Digital Start-up Control Unit for Nuclear Reactors, IRE Trans. on Nuc. Sci., NS-8(3): 1–12 (July 1961).

18. R. F. Shea, Application of Solid-State Devices to Nuclear Plant Technology, AEC Report KAPL-M-RFS-1, Knolls Atomic Power Laboratory, April 8, 1960.

19. Symposium on the Role of Computers in Nuclear Power Plant Operation, Feb. 24, 1962, Pittsburgh, Pa., insert in Nuclear News, May 1962.

20. Reactor Control Instrumentation – Transistorized, AEC Report NP-6644, Fairchild Camera and Instr. Corp., Reconnaissance Systems Div., 1957.

21. A. R. Pearson and C. G. Lennox, Our Changing Views of Reactor Instrumentation, IRE Trans. on Nuc. Sci., NS-8(4): 155–164 (October 1961).

22. M. Bubb, Fresh Path to Reliability, Electronic News, July 16, 1962.

23. M. A. Schultz and J. N. Grace, Nuclear Reactor Plant Kinetics and Control, Proceedings of the IRE, 50(5): 1276–1284 (May 1962).

24. N. E. Huston and N. C. Miller, Special Safety Devices, Nucleonics, 16(5): 86–87 (May 1958).

25. V. S. Underkoffler and R. G. Olson, Design Considerations in a Nuclear Safety Instrumentation System, Elec. Eng., 77(11): 1008–1013 (November 1958).

26. H. Christensen and R. B. Stanfield, The Log Count Rate Period Meter Used with Safety Circuits, IRE Trans. on Nuc. Sci., NS-8(3): 22–26 (July 1961).

27. E. J. Wade and D. S. Davidson, An Electronic Trip System for Reactor Protection – Model D, AEC Report KAPL-1528, Knolls Atomic Power Laboratory, January 17, 1956.

28. W. Gernert, J. Kostalos, Jr., and N. E. Wilson, PWR Nuclear Instrumentation System, AEC Report M-6025, Westinghouse Elec. Corp., Bettis Atomic Power Div., September 2, 1955.

29. F. L. Fillmore and E. Matlin, UPR Instrumentation, AEC Report NAA-SR-Memo-640, North American Aviation, Inc., March 27, 1953.

30. R. J. Hall, SRE Instrumentation and Control, AEC Report NAA-SR-Memo-1639, Atomics International Div., North American Aviation, May 21, 1956.

31. L. S. Beller, Development of a Fast Scram Instrument for OMR Critical Experiment, AEC Report NAA-SR-Memo-2919, Atomics International Div., July 25, 1958.

32. H. W. Slocomb, Instrumentation and Control of the OMR Critical Reactor, AEC Report NAA-SR-Memo-4103, Atomics International Div., North American Aviation, July 9, 1959.

33. Digital Start-up Control for Aircraft Reactors, AEC Report NYO-8586, Ford Instrument Co., March 12, 1958.

34. L. R. Quarles and W. P. Walker, A Manual of HRE Control and Instrumentation, AEC Report ORNL-1094, Oak Ridge National Laboratory, January 23, 1952.

35. K. W. West, Safety Instrumentation and the Human Element, Nuclear Safety, 2(3): 25–27 (March 1961).

36. E. H. Cooke-Yarborough and W. E. Pulsford, An Accurate Logarithmic Counting-Rate Meter Covering a Wide Range, Proc. Inst. Elec. Engrs., 98(II): 196–203 (April 1951).

37. Denis Taylor and G. D. Smith, Advances in Nuclear Electronics. Experts Meet in Paris after Geneva Conference, Nuc. Power, 3: 530–534 (November 1958).

38. E. R. Mann, Electronic Analog Devices for Design of Reactor Controls, IRE Trans. on Nuc. Sci., NS-3(2): 12–17 (March 1956).

39. M. Surdin, Review of French Progress in Nuclear Instrumentation, Nucleonics, 17(8): ____ (August 1959).

40. Reactor Monitoring, Atomics, 8: 181–183 (May 1957).

41. R. R. Hoge and D. J. Niehaus, Transistorized Reactor Instrumentation and Protective Circuits, IRE Trans. on Nuc. Sci., NS-6: 42–48 (1959).

42. M. Surdin, Trends in French Reactor Instrumentation, Nuc. Power, 5(48): 124–126 (April 1960).

43. K. V. Brown, R. L. Deming, and F. A. Mitchell, Transistorized Reactor Instrumentation and Controls, Stromberg-Carlson Co. Engineering, Specification No. 715-180000, September 22, 1959.

44. P. Bonnaure, Instrumentation and Control of French Thermal Reactors, Nuclear Engineering and Science Conference, Chicago, 1958, preprint 152, American Institute of Chemical Engineers (for Engineers Joint Council), New York, 1958.

45. L. Earl Weisner, Jr., Transistor Neutron Count Rate Meter, Nuclear Engineering and Science Conference, Chicago, 1958, preprint 35, American Institute of Chemical Engineers (for Engineers Joint Council), New York, 1958.

46. L. Ehrman, A Transistorized Reactivity Measurement System, AEC Report SCTM-190-60(14), Sandia Corp., July 6, 1960.

47. W. P. DiPietro, General Requirements for the PWR Nuclear Instrumentation System, AEC Report WAPD-PC-166, Westinghouse Elec. Corp. Bettis Atomic Power Div., June 27, 1958.

48. B. H. Axelson, S. N. Ehrenpreis, S. M. Cantor, and C. F. Obermesser, Instrumentation and Control Preliminary Functional Requirements, AEC Report YAEC-22, Westinghouse Elec. Corp., Commercial Atomic Power Activity, April 26, 1957.

49. International Atomic Energy Agency, Safe Operation of Critical Assemblies and Research Reactors, Safety Series No. 4, 1961.

50. H. Hemmer and H. Wilimzig, The Construction of a Monitored Two-out-of-Three System for the Protection of Nuclear Reactors, Atomwirtschaft 5: 449–457 (October 1960).

51. A. G. Dunbar, Instrumentation for Safety: Control and Operation of a Hanford Reactor, Proceedings of Sixth Tripartite Instrumentation Conference Held at Chalk River, Ontario, April 20–24, 1959, Part 1, Reactor Instruments, Canadian Report AECL-801, April 1960.

52. Control System for JRR-1, Japan Atomic Energy Research Institute Report JAERI-1003-F, April 1958.

53. A. Pearson and C. G. Lennox, Experience with the NRX and NRU Control Systems, Proceedings of Sixth Tripartite Instrumentation Conference Held at Chalk River, Ontario, April 20–24, 1959, Part 1, Reactor Instruments, Canadian Report AECL-801, April 1960.

54. G. Cowper, Trends in Nuclear Instrumentation, Canadian Report CRL-42, May 1957.

55. F. J. Schijff, Safety Principles in the Instrumentation of Reactors, Symposium on High Flux Materials Testing Reactors, Brussels, 1959, TID-7584, 1959.

56. N. E. Wilson, Nuclear Instrumentation System Description no. 15, USAEC Report AECU-3586, Westinghouse Elec. Corp., Bettis Atomic Power Div., May 12, 1956.

57. C. A. Pesce, Nuclear Instrumentation and Control of the D_2O-Moderated Thoria-Urania Critical Assembly, USAEC Report ANL-5942, Argonne National Laboratory, May 1959.

58. H. E. Banta and S. H. Hanauer, Testing Procedures for Reactor Instrumentation, USAEC Report CF-56-5-30 (Sect. C), Oak Ridge National Laboratory, February 8, 1954.

59. V. B. Scoville, S_3G/S_4G Nuclear Instrumentation System, AEC Report KAPL-M-SSD-23 (Rev. 2), Knolls Atomic Power Laboratory, May 22, 1956.

60. H. Olken, A Systematic Procedure for Preparing Specifications on Electronic Instrumentation and Control Systems, AEC Report UCRL-5977-T, Lawrence Radiation Laboratory, 1960.

61. J. J. Henry, Transistorized Pulse Counting Equipment, AEC Report Y-1313, Union Carbide Nuclear Co., Y-12 Plant, Oak Ridge, July 26, 1960.

I. GENERAL SAFETY CRITERIA

ATOMIC ENERGY REGULATION BY STATES

A study has been made of the laws and regulations that the several states have or that are in process of adoption, amendment, supplementation, or even in the preparatory stage, with respect to atomic energy, including the receipt, use, transportation, and disposition of nuclear material. Information has also been gathered concerning the possible extension of statutes of limitations under the Workmen's Compensation Acts of the various states or in connection with tort actions with reference to alleged radiation injuries. This latter information will be discussed in the next issue of Nuclear Safety.

After a review of the available information, it was decided to approach the Chief Executives of the states directly, since they would probably be the best sources of information. A letter was written to the Governor of each of the 50 states on October 25, 1961, requesting the desired information. Although it was necessary to write some follow-up letters, the response was gratifying in that all states answered the request. A tabulation showing the persons contacted, the persons who replied, and the significant information received is presented in Table I-1.

All States have an inherent interest in atomic energy activities. Many of the States have laws that predate Federal regulations in this field, particularly in the areas of industrial promotion and health and safety control within their respective boundaries, but such state laws were not adopted in anticipation of the atomic era expansion. Also, the Atomic Energy Act of 1954 did not specifically pre-empt the laws previously enacted by the states; however, that result could be expected in case of conflict.

Table I-1. SUMMARY OF ATOMIC ENERGY REGULATION BY STATES

State	Governor	Address	Answer Date	Name, Title, and Address of Person Who Replied	Enclosures with Replies
Alabama	Patterson, John	State Capitol, Montgomery	10-31-61	Robertson, Joseph G. Executive Secretary Montgomery, Alabama	Bill establishing State Board of Health as radiation control agency; act for participation in Southern Interstate Nuclear Compact; additional information in letter
			11-3-61	Cooper, Charles M. Dir., Leg. Ref. Serv. Montgomery, Alabama	
Alaska*	Egan, William A.	State House, Juneau	5-16-62 and 5-29-62	Olson, Frank A. Asst. Attorney General Dept. of Law Office of Attorney General Box 2170, Juneau, Alaska	Radiation Protection Act; additional information in letter
Arizona*	Fannin, Paul	State House, Pheonix	5-2-62	Macaluso, Samuel J. Asst. Attorney General Pheonix, Arizona	Information supplied in letter
			5-21-62	Gilbert, Wilfred C. Sanitary Engineer State Dept. of Health Pheonix, Arizona	
Arkansas*	Faubus, Orval	Office of Governor, Little Rock	5-1-62	Governor	Act to promote the development, regulation, and utilization of sources of ionizing radiation; to designate the State Board of Health as the State radiation control agency; to authorize the Governor to enter into agreements with the Federal government concerning the discontinuance of certain Federal responsibilities with respect to sources of ionizing radiation
			5-8-62	Holmes, O. W., Comm. Workmen's Comp. Comm. Little Rock, Arkansas	
			5-7-62	Wilson, E. F., Health Physicist, Bureau of Labs State Board of Health Little Rock, Arkansas	
California	Brown, Edmund G.	Governor's Office, Sacramento	1-31-62	Grendon, Alexander, Coordinator, Office of Atomic Energy Dev. & Radiation Protection Sacramento, California	1961 and 1962 biennial reports; act to add transportation of radioactive materials to Health and Safety Code; act to amend Chapter 7. Control of Radioactive Contamination of the Environment of the Health and Safety Code; act to add Radiation Control Law to Health and Safety Code; proposal for transfer of certain regulatory authority from the USAEC to the state

Table I-1. (Continued)

State	Governor	Address	Answer Date	Name, Title, and Address of Person Who Replied	Enclosures with Replies
Colorado	McNichols, Steven	Executive Chambers, Denver	12-27-61	Governor	Order by the Industrial Commission of Colorado compensating a widow for the death of her husband due to exposure to radioactive materials; 1961 Occupational Disease Disability Act Amendment; Colorado Mining Laws with Safety Rules and Regulations
Connecticut	Dempsey, John	Executive Chambers, Hartford	11-2-61 11-3-61	Governor Peterson, Authur V. Exec. Coordinator Atomic Dev. Activities Bridge Square Westport, Connecticut	Act concerning providing for licensing and regulation of sources of ionizing radiation and coordinating development and regulatory activities relating to the peaceful uses of atomic energy; Reg. 287 — Radiation Sources and Radioactive Materials; State Atomic Energy Laws — Coordination Act: Development and Regulatory Activities Relating to the Peaceful Uses of Atomic Energy; State Atomic Energy Regulations
Delaware	Carvel, Elbert N.	State Capitol, Dover	11-2-61	Hartnett, III, Maurice A. Exec. Dir. Leg. Ref. Bureau, Dover, Delaware	Information supplied in letter
Florida	Bryant, Farris	Office of Governor, Tallahassee	11-8-61 11-6-61 and 11-20-61	Governor Dunlap, Robert H., Dir. Fla. Nuclear Comm. Avant Bldg. Tallahassee, Florida	Act relating to the Florida nuclear development commission; Workmen's Compensation Law (as amended, 1961)
Georgia	Vandiver, Ernest	Office of Governor, Atlanta	11-3-61	Harrison, Edwin D., Pres. Ga. Inst. of Tech. and Member of Ga. Nuclear Advisory Comm.	1960 and 1961 reports of the Georgia Nuclear Advisory Commission to the Governor and the General Assembly
Hawaii	Quinn, William F.	Honolulu	12-14-61	Tom, Tenny Hoon Deputy Attorney General Honolulu, Hawaii	Act 115, Extension of Statute of Limitations; Public Health Regulations, Chapter 33, Radiation Protection

Table I-1. (Continued)

State	Governor	Address	Answer Date	Name, Title, and Address of Person Who Replied	Enclosures with Replies
Idaho	Smylie, Robert E.	Statehouse, Boise	11-7-61	Anderson, Vaughn, Dir. Engr. & Sanitation Div. 422 Statehouse Boise, Idaho	Copy of statute relating to the control of ionizing radiation; copy of Radiation Control Regulations as adopted by State Board of Health
Illinois	Kerner, Otto	Springfield	11-14-61	Drach, George E., Chairman Ill. Commission on Atomic Energy, Myers Bldg. Springfield, Illinois	1957, 1959, and 1961 Reports of the Commission on atomic energy, containing information on laws and regulations and Workmen's Compensation
Indiana	Welsh, Matthew	Indianapolis	11-8-61	Poole, B. A., Dir. Bureau of Environmental Sanitation State Board of Health 1330 W. Mich. St. Indianapolis, Indiana	Radiation Control Act; Regulation HSE 22, registration of radiation machines and radioactive materials; Chapter 240, Acts of 1961, amends Workmen's Occupational Diseases Act to allow payment of compensation in cases of occupational disease caused by exposure to radiation; Chapter 101, Acts of 1961, extends period of limitation for filing workmen's compensation claims with the Industrial Board by persons suffering injury or death from exposure to radiation
Iowa	Erbe, Norman A.	Des Moines	11-7-61	Zimmerer, Edmund G. Comm. of Public Health State Dept. of Health Des Moines, Iowa	Copy of Workmen's Compensation Law (includes radiation injury and provides sufficient time); other information in letter
Kansas*	Anderson, Jr. John	State House, Topeka	6-25-62	McAtee, Charles D. Coordinator of Atomic Development Activities Topeka, Kansas	Copy of Radiation Protection Regulations prepared by State Board of Health
Kentucky	Combs, Bert T.	Frankfort	1-8-62	Neel, Jr., James N. Coordinator, Atomic Activities Frankfort, Kentucky	Policies and Procedures for the Licensing and Regulation of Byproduct, Source, and Special Nuclear Materials; reprint of The States' New Role in Atomic Energy; reprint of Federal or State Jurisdiction Over Atomic Products and Waste, A Dilemma; comments and suggestions in re: Proposed Agreement for Discontinuance of Certain Regulatory Authority and Responsibility Between the Commonwealth of Kentucky and the USAEC; also supplementary materials

Table I-1. (Continued)

State	Governor	Address	Answer Date	Name, Title, and Address of Person Who Replied	Enclosures with Replies
Louisiana*	Davis, James H.	State Capitol, Baton Rouge	5-9-62	Aycock, C. C., Lt. Gov. Baton Rouge, Louisiana	Draft of bill to protect the health and welfare of the people by providing for the regulation, development, and proper utilization of atomic and nuclear energy and for the effective control of radiation hazards
Maine	Reed, John H.	Augusta	11-13-61	Hollingsworth, Wayne B. Asst. Attorney General Augusta, Maine	Atomic Energy Laws of the State of Maine as of 8-28-57; Rules and Regulations of the Dept. of Health and Welfare Relating to Radioactive Materials, X-radiation and other forms of Ionizing Radiation; Rules and Regulations of the State of Maine relating to Sanitation of Factories and Mercantile Establishments
Maryland	Tawes, J. Millard	Annapolis	10-31-61	McCain, Russell H. Exec. Asst. to the Gov. Annapolis, Maryland	Radiation Protection Act, which empowers the State Department of Health to exercise control over sources of ionizing radiation
			11-3-61	Douglas, Henry T., Chairman Gov's Adv. Comm. on Nucl. Energy, The Martin Company Baltimore, Maryland	
Massachusetts	Volpe, John A.	State House, Boston	11-3-61	Lappin, Francis L. Legislative Sec. State House Boston, Massachusetts	Statutes — G.L. c. 6, Secs. 85-93, Atomic Energy Commission. G.L. c. 111, Sec. 5B To Control Hazards of Ionizing Radiation. G.L. c. 149, Sec. 6 Investigations as to Safety and Health; Rules, etc; Penalty
			11-24-61	Kelleher, James J. Asst. Attorney General State House Boston, Massachusetts	
Michigan*	Swainson, John B.	Lansing	11-1-61	Derengoski, Robert A. Legal Advisor Lansing, Michigan	Copy of Regulations Governing the use of Radioactive Isotopes, X-Radiation and all other forms of Ionizing Radiation
			5-8-62	Maslowski, Jerome Asst. Attorney General Lansing, Michigan	

Table I-1. (Continued)

State	Governor	Address	Answer Date	Name, Title, and Address of Person Who Replied	Enclosures with Replies
Minnesota	Anderson, Elmer L.	St. Paul	11-1-61	Governor	Two copies of Regulations on Ionizing Radiation
			11-13-61	Barr, Robert N. Sec. & Exec. Officer Dept. of Health Minneapolis, Minnesota	
Mississippi*	Barnett, Ross R.	Jackson	11-10-61	Gray, A. L., Exec. Officer State Board of Health Jackson Mississippi	Copy of Rules and Regulations Governing Radiation, June 1961; copy of Rules and Regulations Governing Radiation, Revised April 1962.
			5-1-62 and 5-22-62	Rester, Robert R., Supervisor Radiological Health State Board of Health Jackson, Mississippi	
Missouri	Dalton, John M.	Jefferson City	11-1-61	Hopkins, S. G., Staff Member Committee on Leg. Res. Jefferson City, Missouri	First Biennial Report of the Missouri Commission on Atomic Energy; act relating to radiation protection and control; act relating to Workmen's Compensation
Montana	Nutter, Donald G.	Helena	11-15-61	Soules, Mary E. Acting Exec. Officer State Board of Health Helena, Montana	Copy of Occupational Disease Law, 1959; copy of memorandum, subject Regulation Prohibiting the Use of X-ray Shoe Fitting Devices
Nebraska*	Morrison, Frank B.	Lincoln	5-18-62	Rogers, E. A., Dir. of Health, Dept. of Health Lincoln, Nebraska	Information supplied in letter
Nevada	Sawyer, Grant	Carson City	11-3-61	Priest, D. W. Deputy Attorney General Carson City, Nevada	Information supplied in letter
New Hampshire*	Powell, Wesley	State House, Concord	5-7-62	Rhodes, Robert W. Adm. Asst. to Gov. Concord, N. H.	Copy of Workmen's Compensation Law; act relative to radiation protection

Table I-1. (Continued)

State	Governor	Address	Answer Date	Name, Title, and Address of Person Who Replied	Enclosures with Replies
New Jersey	Meyner, Robert B.	Trenton	11-9-61 11-15-61	Cascone, Jr., Peter P. Deputy Attorney General Trenton, N. J. Keene, Byron E., Chief Radiological Health Protection, Dept. of Health Trenton, N. J.	Copy of Chapter 1, General Requirements, New Jersey Radiation Protection Code; New Jersey Radiation Protection Act; Proposed amendments to New Jersey Radiation Protection Code, Chapter I, General Requirements; Proposed New Jersey Radiation Protection Code, Chapter II Special Requirements
New Mexico	Mechem, Edwon L.	Santa Fe	12-12-61	Donnelly, Thomas A. Asst. Attorney General Santa Fe, N. M.	Information supplied in letter
New York	Rockefeller, Nelson A.	Albany	11-15-61	Anderson, J. D., Deputy Dir. Office of Atomic Development Albany, N. Y.	State Atomic Energy Law and amendments thereto; Sections of the State Public Health Law; Chapter XVI, "Ionizing Radiation," of the State Sanitary Code; Rule No. 38, "Radiation Protection," of the State Industrial Code; Sections of the New York City Charter, Article of "Radiological Hazards," of the New York City Health Code
North Carolina*	Sanford, Terry	Raleigh	5-11-62	Norton, J. W. R. State Health Dir. Raleigh, N. C.	Reprint of North Carolina Atomic Energy, Radioactivity and Ionizing Radiation Law
North Dakota	Guy, William	Bismarck	11-10-61	Van Heuvelen, W. Exec. Officer State Dept. of Health Bismarck, N. D.	Chapter 185 of the 1957 Session Laws, act relating to the registration of users of radioactive materials or radiation machines with the State Department of Health
Ohio	DiSalle, Michael V.	Columbus	10-31-61 and 11-17-61	Governor	Copy of Regulations 576, 577, and 578, inclusive of the Ohio Sanitary Code to Provide for the Registration of Radiation Sources; copy of the Workmen's Compensation Law; act relative to radiation protection and to the functions, powers, and duties of the department of health relative to the prevention and prohibition of improper radiation; code sections applying to atomic energy activities and State Atomic Energy Advisory Committee

Table I-1. (Continued)

State	Governor	Address	Answer Date	Name, Title, and Address of Person Who Replied	Enclosures with Replies
Oklahoma	Edmondson, Howard J.	Oklahoma City	11-20-61	Mosley, Kirk T. Comm. of Health 3400 N. Eastern Oklahoma City, Okla.	Copy of Oklahoma State Department of Health Radiation Protection Regulations; act relating to atomic energy, ionizing radiation, and radiation protection
Oregon	Hatfield, Mark O.	Portland	11-10-61	Wilcox, Richard H. State Health Officer 1400 S.W. 5th Avenue Portland, Oregon	Copy of Oregon Revised Statute 656.807 extending time within which claim must be filed; bill relating to radiation sources; Board of Health Radiation Protection Rules
			11-15-61	Lafkey, Ray H., Chief Counsel, State Industrial Accident Comm. Salem, Oregon	
Pennsylvania	Lawrence, David L.	Harrisburg	11-17-61	Cohen, Joseph L. Asst. Attorney General General Counsel Dept. of Health P.O. Box 90 Harrisburg, Pennsylvania	Rules and Regulations, Chapter 4, Article 433, Regulations for Radiation Protection
Rhode Island	Notte, Jr. John A.	Providence	11-13-61	Fazzano, Francis J. Asst. Attorney General Providence County Court House Providence, Rhode Island	Information supplied in letter
South Carolina	Hollings, Ernest F.	Columbia	11-7-61	Governor	Copy of report of the Legislative Committee on the Peaceful Uses of Atomic Energy
South Dakota	Gubbrud, Archie	Pierre	11-2-61	Williamson, Alan Asst. Attorney General Pierre, South Dakota	Act relating to public health and providing for protection from harmful radiation exposures; copy of South Dakota's Registration of Sources of Radiation form; regulations of the South Dakota Dept. of Health, Chapter 2; Environmental Sanitation Services, Section 2.14, Radiation Control
			11-3-61	Kurvinke, Donald G., Chief Occup. & Radiological Health Section Pierre, South Dakota	

Table I-1. (Continued)

State	Governor	Address	Answer Date	Title, Name, and Address of Person Who Replied	Enclosures with Replies
Tennessee	Ellington, Buford	Nashville	10-31-61	Governor	Act to prohibit the use or display of fluoroscopic machines in the fitting or sale of shoes, and to prescribe penalties for the violation of this act; act to amend "Radiological Health Service Act;" act relating to atomic energy and nuclear materials; act authorizing Tennessee to cooperate with other southern states in the field of nuclear energy
			11-9-61	Puckett, Nolen, Secretary Tenn. Advisory Committee on Atomic Energy Cordell Hull Bldg. Nashville, Tennessee	
Texas	Daniel, Price	Austin	11-16-61	Wukasch, Martin C., Chief Ionizing Radiation Program Division of Occup. Health Austin, Texas	Copy of Texas Radiation Control Act
Utah	Clyde, George D.	Salt Lake City	11-14-61	Burton, Laurence J. Adm. Asst. to Gov. Salt Lake City, Utah	Order amending the General Safety Orders for Metal Mining
			12-1-61	Boyce, Ronald N. Asst. Attorney General Salt Lake City, Utah	
Vermont	Keyser, Jr. F. Ray	Montpelier	10-31-61	Governor	Act relating to compensation for disablement or death as a result of occupational disease
			12-1-61	Turgeon, Lawrence J. State Librarian Vermont State Library Montpelier, Vermont	
Virginia	Almond, Jr., J. Lindsay	Richmond	11-9-61	Gray, Frederick T. Attorney General Richmond, Virginia	Information supplied in letter
			10-30-61	Winfree, Jr., Peyton B. Exec. Asst. to Gov. Richmond, Virginia	

Table I-1. (Continued)

State	Governor	Address	Answer Date	Name, Title, and Address of Person Who Replied	Enclosures with Replies
Washington*	Rosellini, Albert D.	Olympia	10-31-61	Governor	Copy of Development, Regulation, Utilization of Nuclear Energy and Ionizing Radiation; copy of "Compilation of Industrial Insurance and Medical Aid Acts"
			5-17-62	Stockman, Robert L. Engineer in Charge Air Sanitation & Radiation Control Section Dept. of Health Smith Tower Seattle, Washington	
			5-22-62	Hagan, Jerry, Director Dept. of Labor and Industries Olympia, Washington	
West Virginia	Barron, William W.	Charleston	11-10-61	Bassett, Clement R., Dir. Dept. of Employment Security Charleston, W. Va.	Information supplied in letter
Wisconsin	Nelson, Gaylord	Madison	11-10-61	Toepel, M. G., Chief Leg. Ref. Library State Capitol Madison, Wisconsin	Act regulating workmen's compensation for ionized radiation injuries; act providing for the registration of radiation sources; Legislative Reference Library Report
Wyoming	Gage, Jack R.	Cheyenne	11-15-61	Sundin, Robert E., Dir. Div. of Industrial Hygiene State Office Bldg. Cheyenne, Wyoming	Copy of Chapter 35, Article 3, Radioactive Isotopes

*Denotes states to which follow up letters were sent on April 26, 1962.

By adding Section 274 to the Act, the Congress in 1959 not only recognized the States inherent interests in the field of atomic energy but it also provided the means by which the states, within standard safeguards, could re-enter certain areas of jurisdictional control, which were, in effect, pre-empted during the expansion of Federal development.[1] Section 274 provides, in essence, that the AEC may enter into agreements with any state for the discontinuance of the AEC'c regulatory and licensing functions with respect to source materials, byproduct materials, and special nuclear materials in quantities not sufficient to form a critical mass, and for the state's assumption of these functions. Section 274 also provides specifically for exclusions from jurisdictional transfer, and before any such agreement may be consummated for jurisdictional transfer, the State's program must be compatible, if not identical, with the Commission's program and adequate to protect the public health and safety.

The AEC-approved criteria for state radiation control were first made available to the states in April of 1960. Kentucky was the first state to qualify for the assumption of such authority.[2] Its agreement became effective March 26, 1962. Mississippi has also entered into a similar agreement, which became effective July 1, 1962, and California's agreement, also modeled after that of Kentucky, has been ratified and will become effective September 1, 1962. New York and North Carolina have been working on similar agreements and should be close to their goals; and with assistance from and stimulation by regional committee and conference activities, many, if not all, the states should soon have their programs enacted into or supplemented by similar agreements.

The information compiled either directly from the replies to the inquiries directed to the Chief Executives of the 50 states or from information in the Atomic Energy Law Reporter[3] is summarized below:

Alabama

Act No. 52, H.B. 127, Special Session. Participation in Southern Interstate Nuclear Compact.

Act No. 48, H.B. 122, Special Session. Appropriation to support Southern Interstate Nuclear Board.

Act No. 153, S.B. 218, Special Session. Ad valorem tax exemption for radioactive fall-out shelters.

Act No. 303, S.B. 217, Special Session. Income tax exemption for radioactive fall-out shelters.

Alaska

Territorial statute still in effect. Title 40, Health and Safety, Chapter 1, Section 40-1-6 known as "Radiation Protection Act."

Arizona

No statutory law or regulations, but national standards and criteria of Federal Radiation Council are followed, especially Title 10 of the Code of Federal Regulations.

Arkansas

Adopted Model State Radiation Control Act at the Second Extraordinary Special Session of 1961 and rules and regulations under authority of this act are being prepared for adoption.

California

State radiation control by agreement with the Atomic Energy Commission under Public Law 86-373 becomes effective September 1, 1962. The State Department of Public Health is consolidating into one pamphlet, for publication, all state laws and regulations pertaining to radiation.

Colorado

Radiation poisoning made occupational disease, and pertinent Mining Laws and Regulations have been adopted.

Connecticut

Radiation Code 287 is being revised for publication in the near future.

State radiation control by agreement with the Atomic Energy Commission under Public Law 86-373 is being developed for approval and adoption.

Delaware

No action has been taken.

Florida

Chapter 290, Florida Statutes, to be known as Florida Nuclear Code, changes the name of the Florida Nuclear Development Commission to Florida Nuclear Commission and fixes the powers and duties of said Commission.

Georgia

The Georgia Nuclear Advisory Committee has recommended that tentative code prepared by the Public Health Department be considered for legislation. The Southern Interstate Nuclear Compact was effective March 3, 1962.

Hawaii

Rules and Regulations of the Department of Health have been amended to include Chapter 33, Radiation Protection.

Idaho

Legislation has been adopted that directs the Department of Health and Labor and the Industrial Accident Board, as well as the Governor, to take appropriate action to insure and protect the public health of its citizens against hazardous radiation from any sources, without duplication of effort between the Federal and state governments.

Illinois

Reports of 1957, 1959, and 1961 to the General Assembly by the Illinois Commission on Atomic Energy contains among other things, the Registration Law, Regulatory Act, and rules and regulations as adopted by the Illinois Advisory Council. An interim council will also report to the General Assembly in 1963 on its continuing study of the problems relating to the peaceful uses of nuclear energy and the interrelations of controls between the state and Federal governments.

Indiana

Radiation Control Act (Chapter 77, Act of 1959, as amended) creates a Radiation Control Advisory Committee, empowers the State Board of Health in relation thereto, and also authorizes the Governor to enter into an agreement with the Federal government. Regulation HSE 22 deals with registration of radiation sources.

Iowa

A Governor's Advisory Committee on Ionizing Radiation is expected to make recommendations to the Legislature in its next session.

Kansas

House Bill No. 175 effective June 30, 1959 created Atomic Energy Advisory Council. Kansas State Board of Health adopted Radiation Protection Regulations, March 10, 1961, under authority of House Bill No. 376, effective July 1, 1959.

Kentucky

A member of the Southern Interstate Nuclear Compact, by agreement with the Atomic Energy Commission, effective March 26, 1962, became the first state to qualify for State Radiation Control under Section 274 of the Atomic Energy Act of 1954, as amended; and now also has a Kentucky Atomic Energy Authority under a supplemental law created by Senate Bill No. 326, effective March 14, 1962.

Louisiana

As a member of the Southern Interstate Nuclear Compact, Louisiana has under consideration the establishment of an Atomic Energy Development Agency, A Division of Radiation Control, and a Board of Nuclear Energy.

Maine

Atomic Energy Laws of the State of Maine were effective August 28, 1957. Rules and Regulations of the Department of Health and Welfare (regulating authority) relating to radioactive materials, x-radiation, and other forms of ionizing radiation are available. Rules and Regulations of the State relating to Sanitation of Factories and Mercantile Establishments have been published.

Maryland

The Maryland Radiation Protection Act passed in 1960 created a Radiation Control Advisory Board and empowered the State Department of Health to exercise control over sources of ionizing radiation. It also authorizes the Governor to enter into agreements with the Federal government leading to assumption of state responsibility with respect to sources of radiation.

Massachusetts

The Commission on Atomic Energy was established in 1956. Adoption of controls for hazards of ionizing radiation occurred in 1957. The Department of Labor may adopt rules and regulations, subject to approval of the Department of Public Health to protect employees

against ionizing radiation. The Departments that were directed to initiate and pursue studies for necessary changes in regulations were Public Health, Labor and Industries, Industrial Accidents, Public Works, Public Utilities, Insurance, Natural Resources. There has been a continuing authorization since 1957 for a Special Commission to Investigate and Study Establishment of An Atomic Energy Industrial Research Center.

Michigan

The Department of Health, Division of Occupational Health, pursuant to the state Code, is responsible for Regulations governing the use of radioactive isotopes, x-radiation and all other forms of ionizing radiation. Revisions are currently being made in the Code.

Minnesota

The State Board of Health is the responsible agency for enforcing Regulations on Ionizing Radiation.

Mississippi

Mississippi, a member of the Southern Interstate Nuclear Compact, now has an agreement with the AEC, effective July 1, 1962, for the transfer to it of certain regulatory authority over the use of radioactive materials within the state. Rules and regulations governing radiation were revised in April, 1962, by the State Board of Health.

Missouri

Senate Bill No. 6, Laws of 1959, created the Missouri Atomic Energy Commission. In its first biennial report, the Commission stated that it had not reached a definite decision to either assume or not to assume certain regulatory functions now exercised by the Federal government.

The Health Department under the guidance of the Committee on Radiation Control, a subcommittee of the Missouri Atomic Energy Commission, is responsible for adoption and enforcement of rules and regulations relating to radiation protection and control.

Montana

The Board of Health has banned the use of x-ray shoe-fitting devices in the state, and, in adopting an Occupational Disease Law in 1959, the Legislative Assembly included "poisoning or disease due to x-ray or radioactive substances."

Nebraska

An advisory committee has been appointed to the Director of Health to prepare a bill to be presented to the next session of the legislation that is expected to be patterned after Kentucky's law concerning atomic energy.

Nevada

No legislation about nuclear energy has as yet been proposed or adopted.

New Hampshire

Effective July 1, 1961, the legislature adopted Chapter 60 of the state's Revised Statutes Annotated, which adds the new subdivision "Radiation Protection." The State Board of Health is responsible for its administration.

New Jersey

Chapter 116, Public Laws of 1958, is known as the Radiation Protection Act. This law created, in the State Department of Health, the Commission on Radiation Protection with power to promulgate codes, rules, and regulations to prevent unnecessary radiation, after public hearing. A Radiation Code was adopted and is in effect.

The State is currently negotiating with the Atomic Energy Commission for the transfer of certain regulatory authority from Federal to state hands.

New Mexico

Chapter 186, Laws of 1959, is a comprehensive statute pertaining to radiation control. Under it the State Depart of Public Health is empowered to issue regulations affecting the production, transportation, possession, and disposal of materials. Registration is also required of all persons engaged therein. Section 12-9-8 New Mexico Statutes Annotated also prohibits the operation and maintenance of fluoroscopic or x-ray machines for shoe fitting.

New York

The State Atomic Energy Law (Chapter 41, Laws of 1959) and amendments (Chapter 314, Laws of 1960; Chapter 62, Laws of 1961) created in the Executive Department, the Office of Atomic Development, which coordinates the atomic energy activities of the State Department of Health, the State Department of Labor, and the New York City Department of Health. The regulations of the three agencies are currently being or have been revised in anticipation of the execution of an agreement between the state and the Atomic Energy Commission under Section 462 of the State Atomic Energy Law, as amended, and Section 274 of the Atomic Energy Act of 1954, as amended.

Sections 201-1-(S) and 225-4-(P) of the State Public Health Law are applicable to atomic energy. Similarly, Sections 556 a; 558 a and c; and 561 of the New York City Charter are applicable. Chapter XVI of the State Sanitary Code deals with "Ionizing Radiation Protection."

Article 175 of the New York City Health Code concerns "Radiological Hazards."

North Carolina

The North Carolina State Board of Health, which is responsible for promulgation of regulations that are under study now, has issued a reprint from 1959 Supplement to Replacement Volume 2C, General Statutes of North Carolina, entitled "North Carolina Atomic Energy, Radioactivity and Ionizing Radiation Law." This is Chapter 104C, derived from Chapter 481, of the Acts of 1959.

North Dakota

Chapter 185 of the 1957 Session Laws, codified as Chapter 23-20 of 1957 Supplement to North Dakota Revised Code of 1943, pertains to required registration of users of radioactive materials or radiation machines with the State Department of Health. Applicable handbooks of the National Bureau of Standards serve as the basis for radiation protection in the State.

Ohio

Regulations 576, 577, and 578 of the Ohio Sanitary Code provide for the registration of radiation sources. House Bill No. 410 which enacted or amended Sections 3701.90 to 3701.99 of the Revised Code provides for and empowers the Department of Health, the Public Health Council, and Director of Health to promulgate and enforce regulations relative to the prevention and prohibition of improper radiation.

Section 105.78 of the Revised Code provides for the establishment of a State Atomic Energy Advisory Committee and Section 105.77 provides for the appointment of a coordinator of atomic energy activities, who shall perform, under the supervision of the Director, all functions and duties of the Department of Industrial and Economic Development relative to atomic energy.

Oklahoma

The Oklahoma Radiation Protection Act, Chapter 20 of the 1959 Session Laws, provides for a Radiation Advisory Committee and vests in

the State Department of Health and the State Board of Health authority to enforce it.

The Regulations of the Department of Health were adopted September 10, 1961.

Oregon

Chapter 664, Laws of 1961, relates to radiation sources, radiation protection, and regulations and standards by the State Board of Health. Under authority of Chapter 664 and previous laws, the State Board of Health had adopted radiation protection rules filed with the Secretary of State January 26, 1961, as administrative order H.B. 149.

Chapter 664 also authorizes the Governor to enter into agreements with the Federal government for the state to assume certain responsibilities with respect to radiation sources.

Pennsylvania

The newly revised "Regulations for Radiation Protection" may be found as Chapter 4, Article 433, Rules and Regulations, Department of Health, Commonwealth of Pennsylvania.

Rhode Island

The Atomic Energy Commission of Rhode Island was created by Title 42, Chapter 27 of the General Laws of Rhode Island.

South Carolina

In its first annual report (April 1960), the Committee to Study Peaceful Uses of Atomic Energy, Control of Air and Water Pollution,

and the Use of Radioactive Materials recommended creations of a state nuclear advisory committee, establishment of a post of state nuclear coordinator, certain authority for the State Board of Health, registration of sources of radiation, and preparation for systematic take over of nuclear regulations now in Federal hands. The Committee has been authorized to continue its studies.

In 1961 the state adopted the Southern Interstate Nuclear Compact, and in 1962 created the South Carolina Nuclear Energy and Space Commission with authority to enter into agreements with the Federal government, employ a director, issue and enforce rules and regulations, etc.

South Dakota

By H.B. No. 826, 1957 Legislative Assembly, the state enacted a law relating to public health and providing for protection from harmful radiation. The State Department of Health is vested with authority for enforcement.

Tennessee

In 1957 the State adopted a law (chapter 324) relating to the Peaceful Uses of Atomic Energy, T.C.A. Sections 53-3101 to 53-3105. The Tennessee Advisory Committee on Atomic Energy created thereby was abolished by Chapter 9, Laws of 1959, when a Division of Nuclear Energy Development was created within the State Department of Conservation.

By Chapter No. 7, Laws of 1961, the display or use of fluoroscopic shoe-fitting machines was prohibited. By Chapter No. 9, Laws of

1961, the Radiological Health Service Act adopted in 1959 was amended to enable the Commissioner to provide rules and regulations for licensing of users of byproducts, source, and special nuclear material and other radioactive materials.

Chapter No. 10, Laws of 1961, authorizes the Governor, in his discretion, to enter into agreements with the Federal government relating to regulation of byproducts, source materials, or special nuclear material, etc.

By Chapter No. 104, Laws of 1961, Tennessee became a party to the Southern Interstate Nuclear Compact.

Texas

By Senate Bill No. 189, Laws of 1961, Texas joined the Southern Interstate Nuclear Compact, and under the provisions of Senate Bill No. 68, Laws of 1961, known as the Texas Radiation Control Act, has designated the State Department of Health as the Radiation Advisory Agency, established a Radiation Advisory Board, and set into motion its procedures for entering into agreement with the Atomic Energy Commission to assume responsibility for certain regulatory powers.

Utah

As yet Utah had introduced no legislation but is studying the feasibility of enacting special regulatory legislation dealing with the handling and licensing of nuclear materials.

Vermont

As yet Vermont has no laws and regulations relating to the receipt, use, transportation, and deposition of atomic energy, etc.

Virginia

The Commonwealth of Virginia has provided for joining the Southern Interstate Nuclear Company, with a restriction to limit the effect of certain agreements under the Compact, and has provided for study of atomic energy matters by its Advisory Legislative Council for several years, but has not as yet enacted legislation in this field.

Washington

Chapter 207, Laws of 1961, provides for Development, Regulation, and Utilization of Nuclear Energy and Ionizing Radiation in the state. Both the Technical Advisory Board on Radiation Control and the Advisory Council on Nuclear Energy and Radiation have been appointed.

The Technical Advisory Board on Radiation Control is developing regulations for registration. As soon as its registration program is underway, it will undertake to develop regulations for control, but these are not expected to be completed before the end of 1962.

West Virginia

This state has not as yet enacted any laws or regulations relating to atomic energy. The activity in this field has been limited

to cooperation of a unit of the Health Department with the Atomic Energy Commission on keeping files relating to licensing, etc.

Wisconsin

Sections 20.440(44) and 101.50 of Wisconsin Statutes, both of which were created by Chapter 334, Laws of 1961, pertain to the registration of sources of ionizing radiation.

Wyoming

Chapter 334, Laws of 1961, provides for registration of radiation sources with State Department of Health. The State Mine Inspector will register with the Health Department any mine that is producing radioactive substances. (W. L. Harwell)

EMERGENCY ACTIONS IN RADIATION ACCIDENTS

The National Committee on Radiation Protection and Measurements (NCRP) defines a radiation emergency as "an accident, or other event out of the ordinary, that threatens to expose people to more than 25 r in 1 week."[4] The national laboratories, in general, are more conservative in their definitions of emergencies, including radiation emergencies. For example, Brookhaven National Laboratory procedures define an emergency as "any unusual occurrence where the possibility or probability of danger exists which will affect personnel, the general public, or where property damage may be involved or threatened."[5] The Oak Ridge National Laboratory emergency manual defines an emergency as "an unforseen combination of events, which necessitates immediate action to protect personnel and property."[6]

The NCRP report, in the description of potential accidents, indicates that in some cases, emergencies may involve millions of curies of radioactive materials and that the radiation field may cover several square miles. The emergency procedures established in most national laboratories, however, are directed, in general, toward accidents involving only a fraction of the Laboratory's population and with areas in the immediate vicinity of the accident. If publications available for this review are typical, there is an indication that more planning is needed for radiation emergencies that would require evaluation of an entire nuclear facility or even larger areas.

Planning for Emergencies

An evaluation of potential accidents in an installation handling large amounts of fissionable material and high levels of radioactivity indicates that the danger from an unshielded, uncontrolled, critical accident is much greater than from other sources of high levels of radioactivity, such as reactors. Consequently, following the June 16, 1958, criticality accident at the Y-12 Plant, a committee was set up "to review the prevention and handling of criticality and radiation accidents."[7] In the section of the committee's report dealing with emergency procedures, six items that should be included in emergency plans were suggested. The six items are:

1. "Emergency procedures should set down in clear, understandable terms those essential activities to be carried out immediately following a critical incident or radiation accident. These procedures should provide for coverage on any shift, and it is important that each shift organization be in a position to handle such emergencies for the maximum time required for specialized help to arrive." (A broad outline of a procedure of this type is provided in the subcommittee's detailed report.)

2. "The location of assembly points, decontamination centers, medical field points, and evacuation routes should be clearly and definitely specified."

3. "A form to be used in the collection of data about personnel involved in a criticality or radiation incident should be developed for use in case of radiation accidents. This form would be filled out by each employee at the time his badge is scanned for evidence of neutron induced activity and for beta and gamma exposure, and it would be collected by the team that scans the badge. If there is evidence of high exposure, this team should impound the badge for further radiation measurements and issue a substitute badge."

4. "Provision should be made to call in specialists to help in time of a radiation or criticality emergency. The help expected from such specialists should be clearly defined and understood prior to the emergency. Arrangements should be made for the prompt admission of these specialists. Specialists shall include medical doctors, health physicists, etc."

5. "Drills, based on simulated radiation emergencies, should be staged at periodic intervals for the purpose of keeping personnel aware of the part they are to play in the over-all emergency plan if a radiation incident should occur. Such drills should be as realistic as possible and include specialized staff participation. If conducted in this fashion, these drills should be of assistance in developing a coordinated effort in meeting radiation emergencies."

6. "Instruction cards might be prepared and given to unescorted vistors so that they would know what to do in case of a radiation emergency."[7]

Several persons with responsibilities in this field, as discussed below, are in agreement on the usefulness of planned actions to be taken during radiation emergencies. In the abstract for his paper entitled "Emergency Planning at the National Reactor Testing Station," Horan[8] emphasized that "effective control of any emergency is the by-product of a sound plan, aggressive leadership, adequate communication, effective use of available resources, and extensive training. The keynotes of preplanning must be currentness, simplicity and flexibility. Notification and initial countermeasures must be automatic. Because of the inherent tendency to underestimate the magnitude of an emergency, every effort must be made to respond with personnel, equipment and actions in excess of apparent needs. This is especially true when radioactivity is involved, since there will be extended delays in the complete scoping of the accident."

Neil and White[9] at the Chalk River Plant state that two major accidents have occurred there during the last decade and that planning for such emergencies aided considerably in reducing the wastage of radiation work time and equipment. In their article on planning, they note that "as an aid in exposure control, an index of personnel who are technically competent and physically able to work in protective clothing and equipment is maintained and is available at all times. The personnel listed

do not normally receive any radiation exposure and therefore have a certain backlog of available radiation time."

Keene et al.,[10] at Hanford Atomic Products Operations, note that "many nuclear facilities have an inherent potential for suffering a serious radiation accident resulting in excessive radiation exposure to employees or members of the public, even though the probabilities of such an accident may be extremely low. A realistic assessment of the demands on individuals and organizations following a serious radiation accident indicates that: (1) speed will be essential in rescuing personnel from locations where high dose-rates exist; (2) radiation levels may be so much greater than those usually encountered in normal operating practices that substantial training will be required to assure that personnel react properly and spontaneously to the conditions encountered; (3) medical personnel and facilities may be taxed to the maximum in endeavoring to treat effectively highly contaminated, seriously injured personnel; (4) the dispersal of large amounts of radioactive materials throughout the facility and its environs would seriously challenge the resources of public officials to minimize serious radiation dose and property damage."

Another essential phase of planning for a radiation accident is the establishment of evacuation plans. These plans must be relatively simple, easy to follow, and frequently rehearsed. The plans must center around the proper use of radiation alarms, with a unique tone so they cannot be confused with other alarms. Although considerable attention has been given to a system for establishing evacuation routes, at present it is the considered opinion of most groups[11] that, for emergencies inside buildings, the plan should be to run to the nearest exit. The reason for this

advice is that the speed of exit normally will outweigh any advantage gained by trying to decide the best route to avoid passing close to the area of the accident.

AEC Experience in Radiation Accidents

The accident experience in the Atomic Energy Commission contractor operations for June 1945 through 1960 has been reported. A summary of AEC radiation accidents[12,13] by type is given below:

Criticality accidents	12
Reactor accidents	10
Contamination	33
Fires	15
Explosions	8
Transportation	8
External personnel exposure	18

Because of their special interest to the atomic energy industry, short narrative descriptions of the above incidents are given in the AEC report and its supplements, which were previously reviewed in Nuclear Safety.[14]

Since radiation incidents are somewhat unique and the capability to handle them is not yet adequately developed at the state and municipal levels, the Atomic Energy Commission, in cooperation with the Department of Defense, maintains a nationwide organization of radiation safety teams[15] to provide emergency technical assistance to state and local officals in the event an accident with public health significance occurs during the utilization, handling, or transportation of radioactive materials. The basic mission of the teams is to provide rapid hazard evaluation and recommendations for control. Important requirements for the satisfactory performance of this mission are (1) effective liaison with civil authorities;

(2) speedy team mobilization and transportation; (3) use of professional safety personnel; and (4) field equipment suitable for rapid, approximate measurements.[16]

Emergency Procedures

Emergency procedures, the handling of personnel, the setting of maximum permissible exposures for emergency teams, the radiation survey of large areas, etc., all converge on the solutions to the problems presented by a radiation accident. A proper radiation emergency program consists of several important, closely interrelated aspects, all of which must be handled simultaneously. There are essentially three groups who have specific responsibilities. These are management, medical, and health physics personnel. The management group is concerned with general plant supervision, notification of authorities, such as the AEC, and publicity. The medical group is responsible for prompt handling of all injured and potentially injured people. The health physics group is responsible for determining contamination, estimating doses, evaluating what happened, and advising management.[17]

With reference to health physics participation in radiation emergencies, practically all, if not all, national laboratories and other nuclear facilities have established radiation emergency procedures and organizations. At ORNL, which perhaps is not atypical, the health physics radiation emergency organization consists of a Coordinator and four units or emergency groups:[18] (1) Emergency Site Unit, (2) Radiation Dosimetry Unit, (3) Personnel Survey Unit, and (4) Environmental Survey Unit. In general, the responsibilities of the units are those indicated by the

unit title. The radiation emergency coordinator, as at most other facilities, reports to the Laboratory Emergency Director.

In recent months, radiation emergency planning has begun to extend beyond the confines of national laboratories and nuclear facilities. For example, large cities, such as New York City,[19] are formulating plans to deal with major radiation accidents. The New York City plan for handling radiation accidents relies, in the main, on control at the scene by the Police Department, hazard evaluation by the Health Department and Atomic Energy Commission radiation specialists, a communication plan using telephones and Civil Defense two-way radio, and advance information on storage locations or shipments of hazardous quantities of radioactive material.

Handling of Personnel

The most important fact which must be determined in the case of radiation accident or criticality incident is the amount of radiation to which an individual has been exposed. This determination of the radiation dose is important because decisions concerning subsequent medical treatment will depend on the estimate of the dose received. All persons subject to occupational radiation exposure should have in their possession a personnel metering device capable of measuring the total dose received from ionizing radiation.[9]

Personnel dosimeters should be designed so that the initial-exposure screening in case of an accident can be made in a matter of seconds, using radiation instruments available at the site. There should be a clear understanding prior to an incident as to what readings would be considered significant and what actions are to be taken on the basis of the reading.

A person presumed to be significantly overexposed to external radiation should be removed promply from the hazardous area.[20]

Personnel protection is the first requirement following a major incident. The area should be evacuated immediately. When everyone is safe, survey teams completely equipped with high-range meters and full protective equipment can evaluate the resulting situation and mark the boundaries of the contaminated area. Control points should be established and subsequent entrances and exits should be under close supervision. The general steps for radiation protection, taken in sequence, are the following: (1) evacuate the area; (2) establish the limits of the exclusion area and entrance times; (3) establish the work scheduling program; (4) remove large objects that are highly radioactive in order to reduce the general radiation field; (5) establish the recovery schedule based on an evaluation of the work schedule and available personnel; and (6) modify reclamation methods to provide remote control, shielding, or gross recovery.[21]

Maximum Permissible Exposures for Emergency Teams

Over the past several years considerable attention has been directed to problems of exposure to ionizing radiation dosages under emergency conditions in which normally established peacetime maximum-permissible-dose concepts are not applicable.[22] The NCRP has formulated basic values and recommendations concerning exposure to ionizing radiation, but these rules apply to normal working and living conditions and are presumed to be subject to control. The rules do not apply to emergency conditions, although their achievement would be a desirable goal.[4]

Exposures higher than those discussed by the NCRP can be expected in the case of criticality accidents, reactor accidents, or atomic warfare.

In these cases it is recognized that the risks of radiation damage to the rescue teams and others in the contaminated area would be higher and probably should be set at about the same level as other associated risks. No official maximum-permissible-exposure levels have been established for such cases, but Morgan[23] has suggested that typical instructions to rescue teams might be as follows:

1. Do not hesitate to take 25 rem in a single exposure.

2. In case of an exposure required to save life or essential for national defense, do not hesitate to take 100 rem in a single day, 150 in a single week, or 300 in a single month.

3. Do not take any unnecessary high exposure and, as far as practical, limit high exposure to persons who do not intend to have children. High exposure to pregnant women should never be permitted.

The personnel monitoring records for entry and recovery operations following the SL-1 reactor accident give some indication of the radiation dose that might reasonably be expected in this type of operation. There were only three exposures that exceeded the 25 rem emergency dose, and the highest of these three was 27 rem.[24]

Radiation Survey of Large Areas

From the beginning of the atomic energy program it was recognized that large ground areas might become contaminated with radioactivity resulting from reactor accidents, atomic bombing, or accidents in radioisotope-production industries.[25] Since 1951, tests have been made and reported,[25-28] which indicate that under favorable conditions and with proper instrumentation several square miles of area may be monitored

through the use of light aircraft within a one day period. Based on the latest recommended maximum permissible levels, areas that are contaminated with twice the maximum permissible amount of I^{131} (probably the controlling isotope in a reactor accident) may be detected readily with scintillation detectors carried in light aircraft.[25] Recent surveys, using helicopters,[29] indicate that levels as low as 0.4 $\mu c/m^3$ of I^{131} over a large area may be detected with essentially the same type of instrumentation as used in the light aircraft. Since weather conditions or other factors may prevent the use of light aircraft or helicopters following an incident, this method of survey should be considered only as secondary.

Summary

The following factors must be considered for the adequate control of radiation emergencies:

1. Reduce, by design and operating procedures, the probability of accidents.

2. Design facilities for containment of the maximum credible accident.

3. Prepare written emergency procedures that are well understood and rehearsed frequently.

4. Design and install area radiation alarms that respond rapidly with a distinct audible signal that will stimulate people to move.

5. Design and install a communication system that permits prompt and adequate instructions to personnel in the vicinity of the accident regardless of location.

6. Provide personnel dosimeters that permit quick screening of high exposures and offer a method of quickly evaluating dose received.

7. Provide sufficiently trained personnel, with the proper type of instruments from normal operating groups, to cope with environmental releases and local contamination.

8. Make prearrangements for official news releases as quickly as possible after an incident in order to inform the public fully and accurately of findings of public significance. (D. M. Davis)

NUCLEAR SHIP SITE CRITERIA

The safeguards review of the N.S. SAVANNAH by the Advisory Committee on Reactor Safeguards and the Division of Licensing and Regulation concluded this summer with authorization, on August 3, for interim operation extending over a six-month period and covering approximately six port areas. As a consequence of the study which led to this authorization, the Maritime Administration—AEC Joint Group developed a guide for the "Port Operation of Shipboard Reactors."[30] The principal part of this guide modified the AEC Reactor Site Criteria[31] in such a manner as to make some allowance for the mobility of the ship reactor and to arrive at criteria which would be compatible with both the inherent aspects of nuclear merchant vessels and the safety philosophy which is expressed in the existing site criteria.

Essential Features of the Ship Site Criteria

One of the most important developments was the adaptation of a criterion for total population exposure in lieu of the city distance stipulation in the existing guide.[31] As an interim measure, a criterion of a permissible exposure dose of 2,000,000 man-rem was established, as had previously been proposed.[32] This exposure is in addition to the individual exposure limit of 25-rem whole body (and 300-rem thyroid) that is employed for calculating various defined zones around the ship berth site in a manner similar to the zones around a stationary reactor site.

Other unique features of the ship site criteria involve the removal of the vessel after an accident (as a means of limiting the total population exposure), the manipulation of the ship reactor power history to

match the capability of the berth, and provisions for the exposure potential during the time the ship is entering and leaving a port.

The guide[30] developed for mobile reactors, such as the N.S. SAVANNAH, established three zones that vary in distance from the reactor, as follows:

> "1. Controlled Zone — that area in which all persons are under the direct control of ship's personnel so that in the event of an accident evacuation could be effected within two hours without any person receiving more that 25 rem whole body or 300 rem thyroid, and any individual general public member standing at its outer boundary for two hours would not receive an exposure exceeding 25 rem whole body or 300 rem thyroid.
>
> "2. Low Population Zone — that area in which it is reasonable to expect that in the event of an accident, total evacuation or protective measures could be carried out in a graded fashion within 24 hours so that no person would receive more than 25 rem whole body or 300 rem thyroid; and any member of the general public standing at its outer boundary for 24 hours would not receive an exposure exceeding 25 rem whole body or 300 rem thyroid.
>
> "3. Dense Population Zone — that area which is immediately adjacent to the outer boundary of the low population zone and cannot be evacuated, controlled, or protected.
>
> "It can be seen that the establishment of these zones is not only a function of the fixed port environment, but also a function of the potential reactor accident. If the port environment remains fixed, the reactor's potential maximum accident can be adjusted. Therefore, the basic requirement for suitability for any berth is that the reactor accident potential be adjusted by controlled reactor power history so that the zone boundaries for exposure limitation are equal to or less than those boundaries established on population control or ship mobility.
>
> "To ensure appropriate limitations to long-term effects on the population as a whole, the criteria set forth a 2,000,000 man-rem whole body limitation on the exposure to the total population in all three zones surrounding the reactor for the duration of the accident. Because of the inherent mobility of a shipboard reactor, the duration of the accident is taken to be 24 hours maximum.
>
> "It is this very mobility, however, that makes it necessary to consider the varying reactor conditions and the varying position of the reactor with respect to the port enviroment. Thus, irrespective of an acceptable zone boundry based on individual exposures, the total population dose level should also be met at all times."

Other Aspects of the Criteria

In view of the many unique differences between siting a stationary power reactor and berthing a nuclear merchant vessel, the ship site criteria set forth in some detail the conditions for port entry and the arrangements that must be made. Such conditions and arrangements implement the general objectives of the criteria and ensure their attainment.

The specified conditions for port entry[30] include the following:

1. Invitation from port authorities.
2. Evaluation of enviromental conditions.
3. Evaluation of port emergency capabilities.
4. Notification of all organizations involved.
5. Screening of suitable berths.
6. Evaluation of access and egress routes.
7. Preparation of detailed accident analysis.
8. Availability of tugboats.
9. Testing of emergency equipment.
10. Approval of emergency plans.
11. Limitations on shipboard visitors.
12. Reporting and approval of above factors.

In addition to the above conditions for port entry, the ship site criteria[30] give 24 "additional measures applied to initial operations." These additional measures are specific provisions with respect to the calculation of the specified zones or operating procedures and accident assumptions that would, in effect, introduce extreme safety in the operation of the vessel and extreme conservatism in the calculation of the exposure

that might result from the maximum credible accident. The additional measures to be applied for initial operations are listed below:

1. Use of actual reactor power history.
2. No credit to be taken for emergency cooling.
3. Assume 50% iodine plateout in the containment vessel only.
4. Containment vessel leakage rate assumed to be 2.5% per day.
5. Iodine filter efficiency assumed to be 99%.
6. No credit to be taken for variable wind direction over the 24-hr period.
7. No credit to be taken for other than inversion conditions over the 24-hr period.
8. Dispersion calculations based on 1 meter/sec wind speed, $C_y = 0.4$, $C_y = 0.07$, $n = 0.5$, $h = 0$.
9. Specific emergency plan to be established.
10. Auxiliary boilers to be tested in port.
11. Vacuum to be maintained on main condenser.
12. Ship visitors to be limited to one-half the acceptable number.
13. Site visitors to be limited to one-half the acceptable number.
14. Evacuation drills to be conducted regularly on ship and on site.
15. Reactor compartment integrity and emergency system operability to be tested periodically.
16. Containment vessel leak rate, filter efficiency, and duct tightness to be tested periodically.
17. Senior nuclear staff member to be aboard ship in port.
18. Health physics staff member to be aboard at all times reactor is operating.

19. Port analysis report to be approved by regulatory authorities.

20. Conservative zone boundaries for 25 rem in specified time

1 hr	480 ft
2 hr	650 ft
24 hr	1600 ft.

21. Instantaneous release of fission products to containment vessel.

22. Total population exposures assume maximum persons in controlled zone.

23. Individual exposures less than 0.05 rem not considered.

24. No credit taken for holdup in the reactor compartment.

Discussion

The existing "Reactor Site Criteria" were specifically intended to reflect stationary reactor siting practice in this country. The criteria not only did not cover many of the new problems introduced by a mobile reactor but also would have specifically excluded nuclear shipping from most harbors. As has been previously noted,[33,34] the provision that made it impossible to apply the stationary reactor criteria to mobile reactors was the stipulated city distance, that is, "at least 1 1/3 times the distance from the reactor to the outer boundary of the low-population zone." Since the specified low-population-zone boundary increases from 1.6 miles for a 60 Mw(t) reactor to 4.5 miles for a 300 Mw(t) reactor, it is readily apparent that city distances 1 1/3 times the above would deny a nuclear merchant ship access to most ports in the world. This being the case, it is important to know that the function of city distance criterion was, as stated in the "Reactor Site Criteria":[31]

> "One basic objective of the criteria is to assure that the cumulative exposure dose to large numbers of people as a consequence of any nuclear accident should be low in comparison with what might be considered reasonable for total population dose. Further, since accidents of greater potential hazard than those commonly postulated as representing an upper limit are

> conceivable, although highly improbable, it was considered desirable to provide for protection against excessive exposure doses to people in large centers, where effective protective measures might not be feasible."

Although both these objectives are not readily achievable by a single criterion, the mobile reactor site criteria effect the former by use of a total-population-exposure limit and the latter by safety features in the design, emergency procedures, and the special arrangements for port operation.

Once having established reasonable criteria, it is most important to demonstrate that the criteria can actually be attained in all circumstances. Of particular concern is the capability of removing the ship from its berth in less than 24 hr. Many studies have been made of the exposures as a function of time and position following the maximum credible accident. These are formally summarized, as far as the N.S. SAVANNAH project is concerned, in the Port Analysis Reports (for example, the reports for Savannah, Georgia;[35] Norfolk, Virginia;[36] Panama Canal[37] and in an ORNL report,[38] which presents in more detail the probable exposures, independent of any port or berth conditions. From these studies it is concluded that the exposures to essential shipboard and tugboat personnel would be less than 1-r/hr submersion and less than 80-r thyroid inhalation for the several hours that might be required for the emergency removal of the ship, even if all personnel remained downwind of the release during that time.

The ship criteria also have provided for the relatively large number of persons who might be on site (i.e., within the controlled zone), as well as for those who may be aboard ship. In both instances these persons must be evacuable before they have received 25-rem whole-body or equivalent exposure. Their evacuation must be possible in the specified time, that

is, less than 2 hr, or their presence will not be permitted. In this connection, it is noted that, even assuming the pessimistic leakage and release rates indicated in the interim criteria, the close-in exposures are substantially less than in stationary power plants because of the double containment, so the planned evacuation of personnel is considered feasible.

It appears that the mobile reactor criteria have provided a reasonable extension of the Commission's "Reactor Site Criteria" to meet the needs of ship reactors. In so doing, it has introduced or at least extended certain concepts that will assume greater significance in siting considerations as nuclear technology develops. In addition to the total-population-exposure limit, the following concepts are implicit or explicit in the ship criteria:

1. Controlled release of activity from the accident.
2. Dependence upon operating procedures to minimize the consequences of the mca.
3. Dependence upon administrative control to assure the integrity of certain features (i.e., reactor compartment).

The fact that each of the concepts is involved in conditions that were authorized from the N.S. SAVANNAH does not imply approval of the concepts themselves but rather that, given justifiable reasons, modifications to existing practice will be considered. This is really no more or less than the approved Reactor Site Criteria[31] (for stationary reactors) pointed out in the statement that a "unique or universal feature having a significant bearing on the probability or consequences of accidental release of radioactive materials ... would be taken into consideration." (Wm. B. Cottrell)

References

1. Public Law 86-373; Admendment to the Atomic Energy Act of 1954, Section 274, "Cooperation with States," September 23, 1959.

2. State Control of Radioactive Materials, Nuclear Safety, 3(3): 4–6 (March 1962).

3. State Laws and Regulations, Atomic Energy Law Reporter, Vol. III, p. 23,021 ff., Commerce Clearing House.

4. Exposure to Radiation in an Emergency, National Committee on Radiation Protection, Report No. 29.

5. Safety Manual, Brookhaven National Laboratory, Standard Instruction No. 5.

6. Emergency Manual, Oak Ridge National Laboratory, revised Sept. 1, 1961.

7. Criticality Accident at the Oak Ridge Y-12 Plant, Nuclear Safety, 1(2): 59–63 (December 1959).

8. J. R. Horan, Emergency Planning at the National Reactor Testing Station, paper presented at Seventh Annual Meeting of the Health Physics Society, Chicago, 1962.

9. J. Neil and J. M. White, Pre-Planning for Nuclear Accidents, paper presented at Seventh Annual Meeting of the Health Physics Society, Chicago, 1962.

10. A. R. Keene et al., Elements of Emergency Planning for Coping with a Serious Radiation Accident, paper presented at Seventh Annual Meeting of the Health Physics Society, Chicago, 1962.

11. K. W. Bahler, et al., Prevention and Handling of Radiation Emergencies, USAEC Report K-1436, Oak Ridge Gaseous Diffusion Plant, Dec. 22, 1959.

12. Joint Committee on Atomic Energy, Congress of United States, Selected Material on Employee Radiation Hazards and Workmen's Compensation, Government Printing Office, Washington, D. C.

13. A Summary of Industrial Accidents in USAEC Facilities, USAEC Report TID-5360, Suppl. 3, rev., December 1961.

14. Accidents in Nuclear Energy Operations, Nuclear Safety, 2(4): 55–63 (June 1961).

15. AEC Radiological Assistance Teams, Nuclear Safety, 4(1): __ (September 1962).

16. A. J. Breslin, W. B. Harris, and A. A. Weintraub, Organization of a Radiation Hazard Emergency Response Capability, American Industrial Hygiene Association Journal, 22(1): 59–63 (February 1961).

17. E. L. Saenger, M.D., Planning for a Radiation Accident, American Industrial Hygiene Association Journal, 20(6): 482–487 (December 1959).

18. J. C. Hart, Applied Health Physics Responsibilities in a Laboratory-Wide Emergency, Oak Ridge National Laboratory, July 16, 1962.

19. D. E. Lynch, Guarding Against Major Radiation Accidents in a Large City, American Industrial Hygiene Association Journal, 22(2): 130–132 (April 1961).

20. Safe Handling of Radioactive Isotopes, NBS Handbook No. 42, National Bureau of Standards, 1949.

21. H. Blatz, Radiation Hygiene Handbook, McGraw-Hill, New York, 1959.

22. A. F. Meyer, Jr., Emergency Radiation Exposure Control, American Industrial Hygiene Association Journal, 16(3): 210–214 (September 1955).

23. K. Z. Morgan, Techniques of Personnel Monitoring and Radiation Surveying, September 1960, unpublished.

24. Nuclear Incident at the SL-1 Reactor, USAEC Report IDO-19302, Idaho Operations Office, January 3, 1962.

25. D. M. Davis, J. C. Hart, and K. Z. Morgan, Aerial Surveying for Radioactive Ground Contamination, Nucleonics, 10(11): 75–79 (November 1952).

26. Project 26.4, Aerial Monitoring Operations Development, Operation Plumbbob, Civil Effects Test Group.

27. A. R. Jones, Airborne Gamma Monitor for Ground Contamination, Nucleonics, 20(3): 66–69 (March 1962).

28. A. Brodsky and G. V. Beard, Controlling Radiation Emergencies, USAEC Report TID-8206, February 1960.

29. B. A. J. Lister, The Use of Helicopters for Emergency District Survey after an Accidental Release of Radioactive Material, Health Physics and Medical Division, Atomic Energy Research Establishment, Harwell, England, unpublished.

30. Port Operation of Shipboard Reactors, prepared by AEC–Maritime Administration Joint Group, No. 970/5053, August 1, 1962, submitted for the public hearing on the interim sea and port operation of the N.S. SAVANNAH.

31. Reactor Site Criteria, Title 10, Code of Federal Regulations Part 100, printed in the Federal Register, April 12, 1962.

32. W. B. Cottrell, L. A. Mann, F. L. Parker, and G. D. Schmidt, Environmental Analysis of N.S. SAVANNAH Operation at Camden, Appendix C, USAEC Report ORNL-2867, Oak Ridge National Laboratory, Rev. 1, January 24, 1961.

33. Reactor Site Criteria, Nuclear Safety, 4(1): __ (September 1962).

34. Comments on Proposed Reactor Site Criteria, Nuclear Safety 3(2): 73–76 (December 1961).

35. Port Analyses Report: Savannah, Georgia, prepared by the AEC and Maritime Administration, August 7, 1962, and submitted for the public hearing on the interim sea and port operation of the N.S. SAVANNAH.

36. Port Analyses Report: Norfolk, Virginia, prepared by the AEC and Maritime Administration, August 15, 1962, No. 970/4592, and submitted for the public hearing on the interim sea and port operation of the N.S. SAVANNAH.

37. Port Analyses Report: Panama Canal, prepared by the AEC and Maritime Administration, August 22, 1962, No. 970/4603, and submitted for the Public Hearing on the interim sea and port operation of the N.S. SAVANNAH.

38. W. B. Cottrell and H. C. McCurdy et al., Activity Releases from the N.S. SAVANNAH in the Maximum Credible Accident, USAEC Report ORNL-3361, Oak Ridge National Laboratory, to be issued.

II. ACCIDENT ANALYSES

LOSS-OF-COOLANT ACCIDENTS IN GAS-COOLED REACTORS

The consequences of accidents make it imperative in the design of a nuclear reactor to anticipate potential failures in the system and to provide means for reducing the severity of accidents. It is convenient to postulate a "maximum credible accident" in which a mode of failure is studied that would provide the maximum release of fission products and therefore would be the most dangerous of credible accidents. Actually, the term "maximum credible accident" implies an assignment of probabilities to various conceivable accidents, whereas experience with power reactors has been so limited that an analysis of probabilities is not possible. Extrapolation of experience with other pressure systems must therefore suffice in judging the modes of failure that can be considered credible.

Various possible modes of failure in ductile materials are corrosion, wear, creep, fatigue, and mechanical shock. Proper design can practically eliminate the effects of these variables if all the mechanisms are understood. There are factors, however, which decrease the ductility of ferrous metals. Among these are:[1]

1. Radiation Damage. High-energy neutron irradiation of ferrous materials causes, under certain conditions, a reduction of ductility and impact resistance and an increase in tensile and yield strengths. The changes in the mechanical properties of steel depend not only on the integrated neutron flux but also on the temperature of the material during irradiation. The transition temperature range in which the fracture changes from a ductile, high-energy shear failure to a brittle, low-energy

cleavage failure generally increases with increasing fast-neutron exposure. There is still a large area of uncertainty as to the effects of parameters such as total neutron dose, neutron-energy spectrum, instantaneous neutron flux, exposure temperature, and recovery characteristics. This parameter should be studied continuously in existing reactors by means of surveillance specimens.

2. Graphitization. Graphitization of piping has resulted from the decomposition of iron carbides in some steels, usually the carbon-molybdenum steels, under certain operating conditions. Care in choosing carbide steels for service below the graphitization temperature should obviate this problem.

3. Sigma-phase formation. The sigma phase is a hard, brittle, nonmagnetic intermetallic compound. In austenitic stainless steels, at temperatures around 1040°F, it may be formed from the small amount of ferrite that is normally present in the weld metal.

4. Hydrogen embrittlement. A loss in ductility of ferritic steels can occur with introduction of hydrogen in some processes, such as quenching from a high temperature in a reducing atmosphere, welding with hydrogenous fluxes, or pickling operations. The possibilities of hydrogen pickup during gas-cooled reactor operation from such sources as degassing of graphite, the formation of tritium from the helium coolant and corrosion reactions should be considered, but these do not appear to be serious problems.

5. High residual stresses. Improper welding and erection of piping may introduce high stresses. Proper fabrication techniques and appropriate stress-relief heat treatment can minimize the failure potential from residual stresses.

6. Carburization. When a solid ferrous alloy is heated above the transformation temperature in the presence of a carbonaceous material, carbon may be introduced into the metal. In type 304 stainless steel, increased carbon would improve creep strength but would tend to reduce ductility, particularly notch ductility. Proper design of structural members in proximity with graphite should prevent this problem.

7. Decarburization. Carbon may be removed from the surface of a ferrous alloy when heated in a medium that reacts with carbon in the steel. Such a loss in carbon content during fabrication or welding may reduce the mechanical properties of the material and increase the probability of failure either from fatigue or creep. This effect can be minimized by reasonable precautions.

Often, the maximum credible accident is assumed to be a large failure of a main coolant pipe in which the pipe shears and the two ends displace sufficiently to allow free flow of coolant from each severed end. Actually, an investigation of piping failures over the past 30 years[2] in conventional power plants has revealed numerous small leaks, cracks, or longitudinal fitting ruptures because of improper support, but in this time, only four large pipe failures have occurred. These failures were attributed to use of an inferior brittle type of steel and to weld graphitization. In the design and construction of nuclear plants, the careful selection of ductile materials and the design, construction, and testing techniques that are followed should preclude failures in large pipes.

Failures in ductile materials have been surveyed,[3-5] and it has been almost invariably the case that failures occur longitudinally in pipes, revealing a flow area much smaller than the cross-sectional area of the

pipe. A large failure of the kind assumed in the maximum credible accident could only result from a brittle fracture. For such a failure to occur, it is necessary to have a stress raiser, a stress large enough to cause localized yielding in the vicinity of the stress raiser, and a service temperature below the nil ductility transition (NDT) temperature of the material. The possibility of brittle fracture could be increased by improper materials selection, incorrectly designed dissimilar metal joints, or incorrectly performed heat treatment. The selection of materials, control of fabrication, the use of welding heat treatment, and the proper operating conditions should eliminate the possibility of such a failure. Consideration of the effect of neutron irradiation on the NDT of the material should be a matter of continuing concern.

Failure of the main pressure vessel has always been assumed to be incredible. For instance, in the Humbolt Bay hazards reports[6] justification for assuming that the pressure vessel will not fail is given as follows:

> "Statistics on reactor vessels are not available because of the relative newness of this application. However, good statistics are available on power boilers, and these statistics seem generally applicable to reactor vessels. It is conservatively estimated that there are 400–500 boilers in the United States designed to operate at a pressure over 600 psia, and that they represent not less than 4000 boiler-years of operating experience. The first such boiler was designed over 30 years ago. An examination of the Hartford Steam Boiler Inspection and Insurance Company power boiler statistics shows no failures of steam drums in power boilers designed to operate over 600 psia. In no case have the materials used in these drums been superior to those used in fabrication of reactor vessels . . . . The allowable design stress for the ASME Code vessel is less than one-fourth the ultimate strength of the material. A ductile shear type of failure resulting from loadings which exceed the ultimate strength of the material over a significant section of the reactor vessel could occur only from extreme over-pressure or extreme overloading of a large section."

Thus, in the face of insufficient data from nuclear applications to generate probability values, it is often assumed that the maximum credible accident is a loss of coolant as a result of failure of a main coolant pipe which opens an escape flow area of twice the area of one pipe. This implies an assignment of probability to this event, although it is almost certain that a coolant failure will be a small longitudinal tear rather than a brittle double-ended failure. Recognizing the artificiality of this assumption, the consequences of the accident in terms of structural damage to the reactor, fission-product release, and hazards to the surroundings must be studied. In this review, emphasis is placed on the mechanical and thermal effects of a major loss-of-coolant accident in a gas-cooled reactor. The justification for assuming this to be the maximum credible accident will not be further discussed. The various factors that must be studied in analyzing the effects of a loss-of-pressure accident are the effects of the pressure differentials generated throughout the system; temperature transients in the fuel and their effects on fuel rupture as a function of time after the accident; the oxidation of graphite, if present, and the oxidation of fuel; and the contribution of each of these factors to fission-gas release.

Pressure Differentials Generated During Blowdown

The pressure differentials generated throughout the system by blowdown of the pressurized gas coolant must be evaluated at sufficient points to determine whether the following might take place: ejection of the fuel elements from the core, lifting of the control rods, wrecking of structural members (such as the core support structure if the flow is downward

and collapse of the vessel cooling sleeve), and wrecking of equipment (such as rupture of steam generator tubes and disintegration of main coolant blowers under increased pressure differentials).

In calculating transient pressure differentials it is necessary to idealize the system into a series of volumes and resistances, for example, as in Fig. II-1, which is a flow network model of the Experimental Gas Cooled Reactor at Oak Ridge, Tennessee. In this model, all the gas volume is assumed to be lumped in the two steam generators, the attemperators, and the top and bottom plenums in the pressure vessel. The flow resistances are assumed to be in the core and piping, and the steam generator resistances and the plenum contraction and expansion resistances are assigned to the adjacent piping. The calculation of the transients is considerably simplified in a gas-cooled reactor by the assumption that the coolant behaves as a perfect gas. This assumption is accurate for helium gas at these temperatures and pressures.

The flow escaping from the rupture is at sonic velocity when the pressure differential exceeds the critical pressure ratio,

$$r_c = \left(\frac{2}{\gamma + 1}\right)^{\gamma/(\gamma-1)} ,$$

where r_c is the ratio of the minimum attainable pressure on the nozzle to the pressure upstream from the opening, and γ is the ratio of the specific heat at constant pressure to the specific heat at constant volume, c_p/c_v. For helium, this ratio is 0.4875; thus, when the ambient pressure is 14.7 psia, sonic velocity will exist at internal pressures in excess of 30.3 psia. The operating pressure in the EGCR is 315 psia, and therefore it

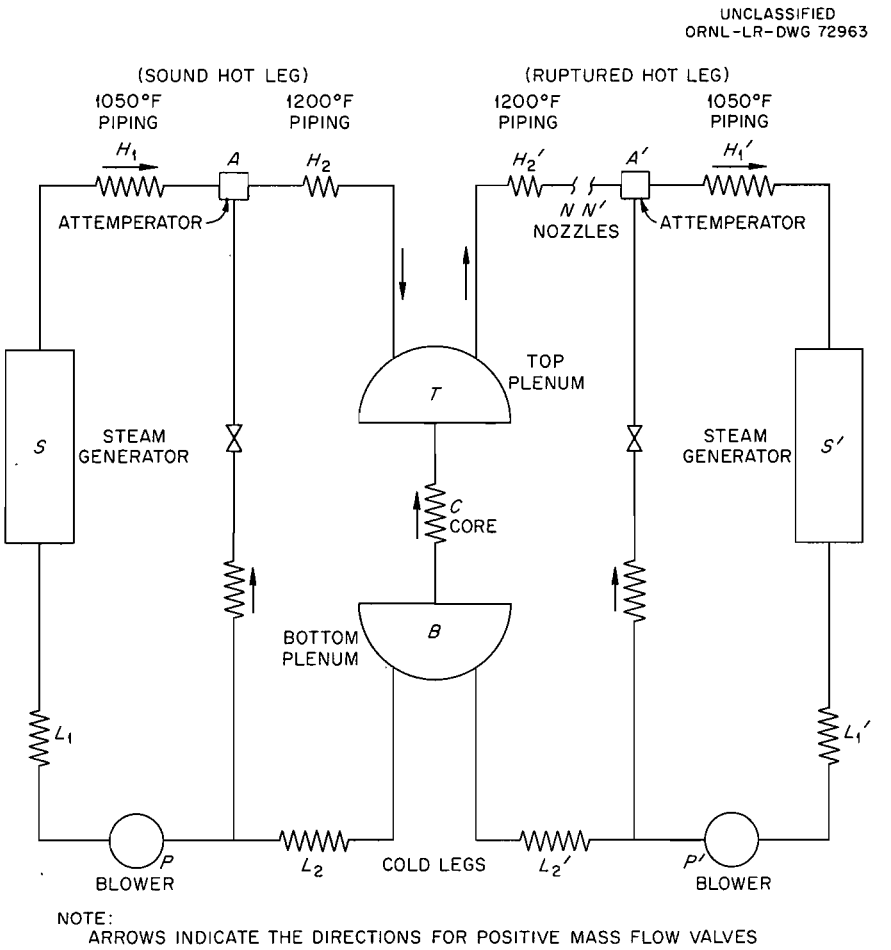

Fig. II-1. Idealized Model of EGCR Flow System.

can be seen that the flow through the ruptured ends of a pipe would be sonic during the greater portion of the blowdown period. Since the maximum pressure differentials would be generated shortly after the onset of the accident, the flow would be sonic throughout the duration of the period of interest. The flow from the ruptured end of the pipe, considering friction pressure drop in the pipe, can be expressed in the form[7]

$$W_n = \frac{A_n \left[\gamma g_c \frac{\mu}{R} \left(\frac{\gamma + 1}{2}\right)\right]^{1/2}}{2\left(A_n^2 \gamma g_c 2k_n + 1 - \frac{\gamma^2}{4}\right)} \times$$

$$\times \left\{-\gamma + \left[\gamma^2 + 4\left(A_n^2 \gamma g_c 2k_n + 1 - \frac{\gamma^2}{4}\right)\right]^{1/2}\right\} \frac{p_i}{T_i^{1/2}} \quad , \qquad (1)$$

where

W_n = flow through ruptured nozzle, lb_m/sec,

A_n = area of nozzle, ft^2,

γ = ratio of specific heat at constant pressure to the specific heat at constant volume, c_p/c_v,

μ = molecular weight of gas, $lb_m/lb \cdot mole$,

R = universal gas constant, $ft \cdot lb_f/lb \cdot mole \cdot {}^\circ R$,

g_c = conversion constant, $lb_m \cdot ft/lb_f \cdot sec^2$,

k_n = friction parameter of pipe, $lb_f \cdot sec^2/lb_m \cdot ft^5$, defined by

$$\frac{dp}{dL} = \frac{k_n}{L} \frac{W^2}{\rho} \quad ,$$

p_i = pressure of volume nearest rupture from which flow emanates, lb_f/ft^2,

T_i = absolute temperature of volume from which flow emanates, °R,

ρ = density, lb_m/ft^3,

L = length of pipe, ft.

If the density is taken as the arithmetic average of the inlet and the outlet condition and the temperature change is small, the flow of a perfect gas in a section of pipe between two volumes can be expressed as

$$W_{ij} = \left(\frac{p_i^2 - p_j^2}{2k_{ij}\frac{R}{\mu}T_j}\right)^{1/2} \qquad \text{if } p_i > p_j \quad , \tag{2}$$

or

$$W_{ij} = -\left(\frac{p_j^2 - p_i^2}{2k_{ij}\frac{R}{\mu}T_j}\right)^{1/2} \qquad \text{if } p_j > p_i \quad , \tag{2a}$$

where

W_{ij} = flow from volume i to volume j,

p_i = pressure in volume i,

p_j = pressure in volume j,

k_{ij} = friction parameter defined similarly to k_n, above.

Consideration of mass and energy conservation in each volume for adiabatic conditions results in equations for each node in terms of pressure and temperature. Taking as an example the top plenum of Fig. II-1, with a rupture in the pipe between the attemperator and the top plenum, from the fact that the volume of the node is constant, the following can be written:

$$\frac{dv_T}{d\theta} = -\frac{V_T}{m_T^2}\frac{dm_T}{d\theta} \quad , \tag{3}$$

where

v_T = specific volume of gas in the top plenum, ft^3/lb_m,

V_T = total volume of the top plenum, ft^3,

m_T = mass of gas in top plenum, lb_m,

θ = time, sec.

From mass conservation,

$$\frac{dm_T}{d\theta} = W_{H_2} + W_C - W_{H_2'} \quad , \tag{4}$$

where the subcripts of the mass flows can be seen from Fig. II-1. From the ideal gas law,

$$\frac{dT_T}{d\theta} = \frac{T_T}{v_T}\frac{dv_T}{d\theta} + \frac{T_T}{p_T}\frac{dp_T}{d\theta} \quad . \tag{5}$$

From conservation of energy,

$$\frac{d}{d\theta}(m_T c_v T_T) = W_C c_p T_B + W_{H_2} c_p T_A - W_{H_2'} c_p T_T \quad , \tag{6}$$

where

c_v = specific heat at constant volume, $Btu/lb_m \cdot °F$,

c_p = specific heat at constant pressure, $Btu/lb_m \cdot °F$.

Rearranging Eq. (6) then gives

$$\frac{d}{d\theta} = (m_T T_T) = \gamma(W_C T_B + W_{H_2} T_A - W_{H_2'} T_T) \quad ,$$

and substituting the perfect gas law and rearranging gives

$$\frac{dp_T}{d\theta} = \frac{R}{\mu V_T} \left(W_C T_B + W_{H_2} T_A - W_{H_2'} T_T\right) \quad . \tag{6a}$$

The above equations can be reduced to two equations per node, in terms of pressure and temperature, by the substitution of Eqs. (1) and (2) into (6), and (3) and (6) into (5) to yield for the top plenum, where $W_{H_2'} = W_n$ of Eq. (1):

$$\frac{dp_T}{d\theta} = \frac{R\gamma}{\mu V_T} \left[\left(\frac{p_B^2 - p_T^2}{2k_{BT} \frac{R}{\mu}} T_B\right)^{1/2} + \left(\frac{p_S^2 - p_T^2}{2k_{ST} \frac{R}{\mu}} T_S\right)^{1/2}\right.$$

$$- \frac{A_n \left(\gamma g_c \frac{\mu}{R}\right)^{1/2} \left(\frac{\gamma + 1}{2}\right)^{1/2}}{2 \left(A_n^2 \gamma g_c 2k_n + 1 - \frac{\gamma^2}{4}\right)}$$

$$\left.\times \left\{-\gamma + \left[\gamma^2 + 4 \left(A_n^2 \gamma g_c 2k_n + 1 - \frac{\gamma^2}{4}\right)\right]^{1/2} p_T T_T^{1/2}\right\}\right] \tag{7}$$

and

$$\frac{dT_T}{d\theta} = \frac{T_T}{p_T} \frac{R}{\mu V_T} \left[\left(\frac{p_S^2 - p_T^2}{2k_{ST} \frac{R}{\mu}} T_S\right)^{1/2} \left(\gamma - \frac{T_T}{T_S}\right)\right.$$

$$+ \left(\frac{p_B^2 - p_T^2}{2k_{BT} \frac{R}{\mu}} T_B\right)^{1/2} \left(\gamma - \frac{T_T}{TB}\right) - \frac{A_n \left(\gamma g_c \frac{\mu}{R}\right)^{1/2} \left(\frac{\gamma + 1}{2}\right)^{1/2}}{2 \left(A_n^2 \gamma g_c 2k_n + 1 - \frac{\gamma^2}{4}\right)}$$

$$\left.\times \left\{-\gamma + \left[\gamma^2 + 4 \left(A_n^2 \gamma g_c 2k_n + 1 - \frac{\gamma^2}{4}\right)\right]^{1/2}\right\} p_T T_T^{1/2} (\gamma - 1)\right] \quad . \tag{8}$$

Similar equations in T and p may be written for the other nodes of the system by using the relationship for sonic flow through the ruptured pipe, W_n, in the equation describing the node on the other side of the break (node A′ if the break is in line H_2') and the appropriate form of Eq. (2) for the pipes connecting the other nodes. This results in 2N non-linear first-order differential equations describing the flow network, where N is the number of nodes. In the example of Fig. II-1, this re-results in 12 coupled equations. These may be solved by numerical methods on a digital computer or directly by means of an analog computer. The resulting transient pressures in each volume can then be used to determine the pressure differential generated across components of interest, e.g., the core or the blowers.

The behavior of the blowers during the blowdown process can be analyzed if the assumption is made that the blower speed does not change appreciably during the transient (less than 1 sec). Under normal operating conditions the characteristics of axial flow blowers within a certain range can be expressed as[8]

$$\frac{Q}{N} = a + b\Psi + c\Psi^2 \quad ,$$

where

Q = volumetric flow rate, ft^3/min,

N = rate or speed, rpm,

Ψ = pressure coefficient, dimensionless, defined by

$$\Psi = \frac{gH_a}{nU^2} \quad ,$$

g = gravitational constant, ft/sec^2,

H_a = adiabatic head, ft,

n = number of stages, dimensionless,

U = mean blade velocity, ft/sec.

The constants a, b, and c can be determined from performance charts for the given blower in question. To make this equation compatible with the parameters of the other equations describing the system, Q can be replaced by W/ρ, where W is the mass flow rate, and ρ is the density, and Ψ can be replaced by its definition

$$\Psi = \frac{gH_a}{nU^2} = \frac{g\,\Delta p}{\rho n U^2} \quad .$$

Thus, inserting the perfect gas law,

$$\rho = \frac{p}{\frac{RT}{\mu}} \quad ,$$

$$W = \frac{aNp}{\frac{RT}{\mu}} + \frac{bNg\,\Delta p}{nU^2} + \frac{cNg^2\,(\Delta p)^2\left(\frac{R}{\mu}\right)T}{n^2U^2p} \quad .$$

Grouping the constants and substituting $\Delta p = p_B - p_P$ yields

$$W_P = a'\,\frac{p_P}{T} + b'(p_B - p_P) + c'\,\frac{T}{p_P}\,(p_B - p_P)^2 \quad , \tag{9}$$

where p_P is the blower inlet pressure, as can be seen in Fig. II-1. Equation (9) is true only if the pressure rise across the blower is less than

the Δp at which surging will occur. In a short transient it can be assumed that the flow through the blower is zero if the blower surges, thus, Eq. (9) holds if $p_B - p_P < \Delta p_{surge}$, otherwise

$$W_p = 0 \qquad \text{if } p_B - p_P > \Delta p_{surge} \quad . \tag{9a}$$

Since the flow through the blower must equal the flow from the steam generator to the blower, Eq. (9) must be equated to the proper form of Eq. (2):

$$\left(\frac{p_S^2 - p_P^2}{2k_{SP}\,\frac{R}{\mu}}\right)^{1/2} = \frac{a' p_P}{T^{1/2}} + b'(p_B + p_P)\,T^{1/2} + \frac{c'(p_B - p_P)^2 T^{3/2}}{p_P} \quad ,$$

$$\text{if } p_B - p_P < \Delta p_{surge} \quad . \tag{10}$$

Equation (10) gives one more equation involving one more variable, p_P, that must be satisfied to solve the flow network. If $p_B - p_P > \Delta p_{surge}$, then Eq. (9a) is used.

The pressures generated in the top and bottom plenum of the EGCR as a result of a double-ended rupture of an outlet pipe are shown in Fig. II-2. The pressure drop across the core can be seen to rise to a maximum of approximately 32 psi within 0.25 sec after the loss of coolant. This transient lifting pressure across the core can then be used to determine the lifting forces on the fuel elements, the core graphite structure, and the control rods and the collapsing force on the pressure vessel coolant shroud and the core peripheral seals. The pressure generated across the blowers will determine whether the blower will be available after the accident.

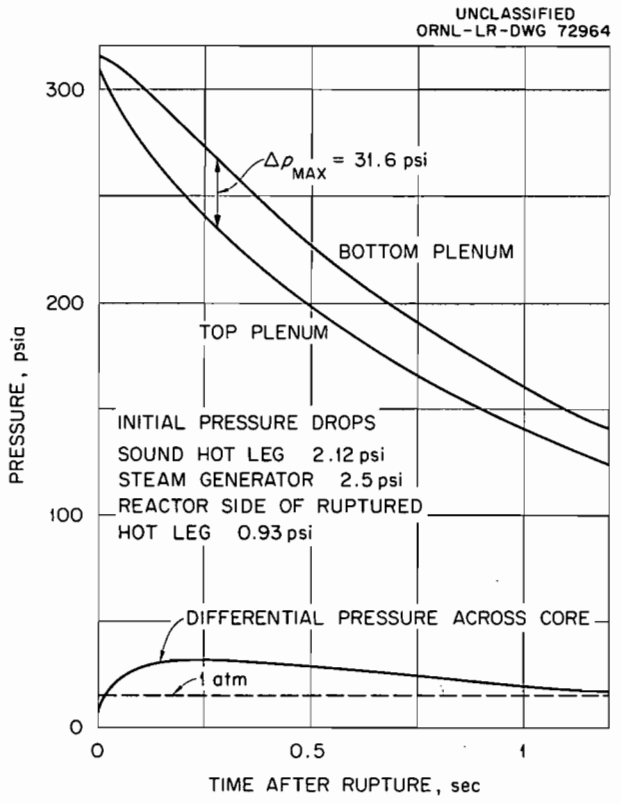

Fig. II-2. Transient State of Pressures Produced by Hot-Leg Rupture.

It was found that, in the EGCR, the control rods would not be ejected if an outlet-pipe ruptured. The fuel elements would rise if not restrained by the top lock mechanisms. The core block would rise if the cross-sectional area available to the lifting force were not reduced by means of the gas seals surrounding each channel where they mate with the bottom support plate. If a cold reactor inlet pipe ruptured the resulting downward force on the core support structures would damage at least one blower. These observations are reported to show the factors that must be considered in a given design.

Effects of Loss of Coolant

The loss-of-coolant accident would lead to fuel element failures if cooling could not be provided. Natural-convection cooling may not be sufficient with the air-helium mixture at atmospheric pressures. If forced cooling is not provided, the fuel element temperature will rise because of decay heat until the cladding melts or the internal fission-gas pressure causes rupture of the fuel cladding. The rate of temperature rise of the fuel will be closely associated in a graphite-moderated reactor with the combustion of graphite in the air that will enter the core after the blowdown period.

The analysis of the temperature transients is complex when the graphite-air reaction is considered. The heat removal is a function of the flow velocity and composition of the gas, its inlet temperature, and the initial axial temperature distribution in the fuel channel, fuel, and graphite, which affect the outlet temperature (and thus natural-convection flow, if this is the dominant mode of cooling). If one blower is operative,

the flow distribution between the core and the inoperative loop must be analyzed. The heat generation is composed of two unrelated factors; the nuclear decay heat,[9] which varies with time after shutdown, and the heat of graphite oxidation, which depends primarily on the temperature of the graphite in the temperature range of interest here.[10] The heat of graphite oxidation may be expressed in the form

$$\frac{q}{A} = L \, \Delta H \, k \quad , \tag{11}$$

where

q/A = heat generation per unit surface area of channel, $Btu/hr \cdot ft^2$,

L = effective depth of oxidation, ft,

ΔH = heat of combustion at temperature of combustion, Btu/lb_m,

k = reaction rate, weight oxidized per total weight per unit time, hr.

The effective depth of oxidation can be estimated from the relation:

$$L = \left(\frac{M D_p}{k \rho R T} \right)^{1/2} \quad , \tag{12}$$

where

M = molecular weight of carbon, 12.01

D_p = effective diffusivity of oxygen in graphite pores, ft^2/hr

ρ = density of graphite, lb/ft^3.

The reaction rate, k, can be expressed as

$$k = f \, e^{-a/RT} \quad , \tag{13}$$

where

f = frequency factor per hour,

a = activation energy, energy/mole.

Thus it can be seen that the heat flux rate as a result of oxidation can be expressed as

$$\frac{q}{A} = \left(\frac{fMD_p}{\rho RT}\right)^{1/2} \Delta H \; e^{-a/2RT} \tag{14}$$

or, introducing the relation[12]

$$D_p = c' \frac{0.233\epsilon^2}{P} \left(\frac{°K}{273}\right)^{1.5}$$

yields

$$\frac{q}{A} = CT^{0.25} \; e^{-a/2RT} \quad , \tag{14a}$$

where

ϵ = porosity of oxidizing sample, ratio of pore volume to sample volume,

P = total pressure, atm,

c' = constant for converting from cm^2/sec to ft^2/hr.

It is evident from Eq. (14a) that the reaction rate is extremely sensitive to temperature. Therefore the temperature dependence must be considered in any analysis of the temperature transients in the fuel. It is beyond the scope of this report to describe in detail the transient calculations (for a more complete summary, see ref. 13). If the initial temperature is in a range where the temperature excursion of the reactor

core is in doubt, this temperature sensitivity of the graphite oxidation heat flux contribution requires fine analysis of the initial fuel element surface temperature transients because of the temperature levelization within the fuel and the attendant increased radiant heat load from the fuel element surfaces to the inner surface of the moderator block or fuel element sleeve.

Generation of Explosive Concentrations of CO and H_2

The oxidation of graphite also contributes to carbon monoxide production if the reaction is significantly oxygen starved, although it is apparently impossible to generate a detonation wave by combustion of CO because the nitrogen in the containment vessel air would maintain the composition below the 38% by volume value required for detonation.[14] Rapid combustion can occur, however, in a premixed carbon-monoxide air system if the carbon monoxide concentration is in excess of 12.5% by volume.[14,15] Whether this concentration can be reached depends on whether there is sufficient oxygen left in the containment vessel after the required amount of oxygen has been consumed to reach this concentration. If this condition is satisfied, then the pressure rise in the containment vessel as a result of this rapid combustion should be calculated, because it may exceed design pressure.

Fission-Gas Release

All the above considerations are required because of the possibility of eventual fission-product release to the environment and the attendant hazards to life and property. In a UO_2-fueled, metal-clad, fuel element,

most of the fission gases are retained within the UO_2 crystal lattice at temperatures below the grain-growth temperature (~1700°C). During normal operation, the internal pressure buildup depends on the fraction of the fuel that is below the grain-growth temperature, the fuel density, and the temperature distribution in the fuel.

The time required to rupture the cladding depends on the creep and stress-rupture characteristics of the cladding at high temperatures, the amount of fission gas accumulated within the free areas inside the fuel can, and the transient temperature behavior of the fuel can. Procedures for evaluating the release of fission products from UO_2 during normal operation are well documented and will not be further discussed here (see, for example, ref. 16 and chap. 9 of ref. 17; for a recent summary of factors affecting behavior of fission gases in UO_2, see ref. 18).

After the cladding fails, unless the fuel is cooled, its temperature will continue to rise until melting occurs or oxidation takes place, if there is air present. Continuing studies are under way to determine the fraction of nuclides released from reactor fuels when molten and oxidized. Small-scale laboratory tests[19] show that when UO_2 is melted in air, ~99% of the rare gases are released. The other fission products are quite variable, but it appears that for complete melting ~95% of the iodine, ~70 to 90% of the tellurium, ~30 to 50% of the cesium, and ~60 to 75% of the ruthenium are released. The release of strontium is ~0.1 to 0.3% and the barium release is ~0.4 to 0.7%. Less than 0.6% of the total remaining elements are released. Of these, the iodine, tellurium, and cesium deposit on available surfaces. Although this effect has a reducing influence on the release of activity, the chemisorption of iodine on small dust

particles could prove troublesome in reducing the effectiveness of iodine-removal systems where used. These values cannot be used in reactor design because of great differences in geometry and other conditions. Larger scale tests and in-pile meltdowns are planned to provide data that it is hoped will be applicable to hazards analyses.

Summary

It is apparent from the foregoing discussion that a number of problems interlock in the analysis of a loss-of-pressure accident in a reactor. It was necessary to restrict this article to loss-of-coolant accidents in gas-cooled reactors and further to restrict the coverage to a skeleton description of the analysis of pressure differentials generated in the blowdown process, with passing mention of some of the other factors that must be considered in evaluating the consequences of an accident of this kind. It is obvious that a fruitful field for study is the characterization of the kind and size of failure that would cause the accident. Studies are under way at ORNL for quantizing fission-product release from fuel elements under melting and oxidizing conditions. These and other studies on control of fission products after release may shed some light on the consequences of accidents and may lead away from the conservative positions now generally taken in evaluating reactor safety. (M. H. Fontana)

IN-PILE LOOP HAZARDS

In a previous issue of Nuclear Safety[20] basic safety precepts for in-pile loops were discussed. In reviewing hazard reports for several widely different types of in-pile loops, it became apparent that certain hazards were typical and were reiterated in the hazards analyses regardless of the specific type of loop. Several of these loop hazards have been considered in connection with the in-pile loops described below:

1. The EGCR Loops.[21] These loops consist of four gas-cooled in-pile loops suitable for operation with helium or carbon dioxide as the coolant at a pressure of 1000 psi and a heat capacity of 1.5 Mw each. These loops were designed for installation in the Experimental Gas-Cooled Reactor at Oak Ridge, but construction has been deferred until a later date.

2. The HWCTR Loops.[22-24] These loops consist of two heavy-water in-pile loops, one designed for use with liquid D_2O at a pressure of 2000 psi and a 1.43-Mw heat capacity and the second designed for use with boiling D_2O at a pressure of 1500 psi and a 1.8-Mw heat capacity. These loops are being installed in the Heavy-Water Component Test Reactor at the AEC Savannah River Installation.

3. The CVTR Loop.[25] This loop, a pressurized light-water in-pile loop, was designed to operate at a pressure of 1500 psi with a heat capacity of 175 kw and was installed in the Westinghouse Testing Reactor near Pittsburgh, Pennsylvania. It was never operated, however, because a decision was made to permanently shut down the reactor.

4. The PW-19 Loop.[26] This loop is a liquid-metal-cooled in-pile loop with a 100-kw heat capacity that is designed to be installed in the Engineering Test Reactor at the National Reactor Testing Station.

5. The PRTR Loop.[27] This loop is a 500-kw CO_2-cooled in-pile loop that is installed in the Plutonium Recycle Test Reactor at the AEC Hanford Installation.

The hazards associated with these loops can be classified as follows: (1) chemical reactions, (2) failure of the loop heat dump system, (3) loop power failure, (4) coolant circulator failure, (5) primary containment system failure, (6) mechanical failures in the in-pile section, and (7) interaction between the loop and reactor. These do not represent all the hazard problems that were considered in the design of these loops, but, as discussed below, they indicate the significant, specific, similar problems that may be present in loops of greatly different physical appearance and purpose.

Chemical Reactions

The existence of a chemical hazard is most prevalent if the loop is operating with a coolant substantially different from that of the reactor in which the loop is situated or the loop is operating under significantly different conditions from those of the reactor. One example of this type of hazard is illustrated by the EGCR loops which are capable of operating with CO_2 coolant at a pressure of 1000 psia and a temperature of 1050°F in a reactor that is helium-cooled. In the case of an in-pile tube rupture, there exists the possibility of a CO_2-graphite reaction, because the resulting CO_2 concentration in the primary reactor system

could be as much as 10 vol %. In order to minimize this hazard, provision is made to scram the reactor automatically in the event of any rapid loop depressurizations and thereby permit the graphite to be in contact with the CO_2 only a few seconds while at high temperature.

Another example is a liquid-metal-cooled loop such as the PW-19 in-pile loop[26] in which the following chemical reactions would be possible in case of a double tube rupture:

$$Na + H_2O \rightarrow NaOH + 1/2\ H_2 \tag{1}$$

$$Na + NaOH \rightarrow Na_2O + 1/2\ H_2 \tag{2}$$

$$Na + 1/2\ H_2 \rightarrow NaH \tag{3}$$

$$K + H_2O \rightarrow KOH + 1/2\ H_2 \tag{4}$$

$$K + 1/2\ H_2 \rightarrow KH \tag{5}$$

Reactions 1 and 4 would be practically instantaneous; reactions 2, 3, and 5 would be slow in comparison. In considering the potential damage that could result from these reactions, the possibility of shock effects must be examined. The energy of a pressure wave would be transmitted by actual shock waves and gas bubbles formed by the liberation of hydrogen. Tests have indicated,[26] however, that it is almost impossible to mix NaK and water fast enough through any conceivable leak that may occur in an in-pile loop system to obtain a reaction that would produce the shock waves characteristic of high explosives. In a similar manner, the following Nak and air reactions could occur:

$$2Na(\text{liquid}) + 1/2\ O_2\ (\text{gas}) \rightarrow Na_2O\ (\text{crystal}) \tag{6}$$

$$2Na(crystal) + O_2\ (gas) \rightarrow Na_2O_2\ (crystal) \quad (7)$$

$$2K(crystal) + 1/2\ O_2\ (gas) \rightarrow K_2O\ (crystal) \quad (8)$$

$$2K(crystal) + O_2\ (gas) \rightarrow K_2O_2\ (crystal) \quad (9)$$

$$K(crystal) + O_2\ (gas) \rightarrow KO_2\ (crystal) \quad (10)$$

Again the hazard would result from the pressure buildup in the air channels resulting from the chemical reactions. In the case of the NaK-air reaction there is the additional possibility of excessive radiation levels from air-borne activity. Double containment and detection instrumentation in the annulus minimize the problems of this type of hazard.

A chemical reaction might also occur between the loop coolant and the fuel specimen. In the case of the EGCR loops, it was estimated that about 0.6% of a UC-type fuel specimen could oxidize in 6 hr in the case of a cladding failure when CO_2 was used as the coolant. In the EGCR loops, this was not considered to be hazardous.

In the CVTR loop no chemical reactions were anticipated under normal operating conditions; however, under abnormal temperature conditions, the following metal-water reactions were considered to be possible:

Zircaloy-2—H_2O
Type 410 stainless steel—H_2O
Type 304 stainless steel—H_2O

These reactions could result from two postulated types of accidents: (1) a rapid-power-rise accident and (2) a loss-of-coolant accident. The loss-of-coolant accident was considered the more serious hazard and, in fact, constituted the maximum credible accident for the CVTR loop. Under such a condition the temperature of the test assembly would have risen

sharply and the cooling water would have vaporized. The reaction between steam and bulk Zircaloy-2 fortunately would be slow and not autocatalytic at temperatures below 1860°C. Some reaction between stainless steel and steam would take place, but the reaction would not be vigorous. Since exposure of the test assembly to excessively high temperatures would have been limited by the conditions of operation and by safety instrumentation, it was concluded that the hazards resulting from metal-water reactions could have been minimized.

Another type of chemical hazard that is common to many in-pile loops and one which must be investigated is that which would be caused by a rupture of the primary loop system that would permit atmospheric air to enter the loop system. A typical result might be fuel element rupture. If the element were stainless steel-clad UO_2 and the cladding failed, the UO_2 would oxidize to U_3O_8, with a resultant loss of integrity of the test specimen fuel pellets. The oxidation would be more serious in the case of a beryllium-clad fuel element, because there would be hydrolysis of the BeO-base fuel.

Failure of Heat-Dump System

The heat of a test specimen in an in-pile loop is usually dissipated in a heat-dump system by exchanging the coolant heat with the ambient air or a service-water supply. In the case of the EGCR loops, three independent supplies were planned in order to achieve maximum reliability: a demineralized-water system, a river-water system, and an emergency-water system, probably from an elevated fire-water tank. Normally, heat from an EGCR loop would be removed from the primary coolant by a closed

demineralized-water system which would exchange its heat in a condenser unit with river water. The reliability of the river-water service would be achieved by three independent service water pumps, with a fourth in standby. The river-water system would be backed up with the emergency cooling-water system which would be capable of removing the experimental loop afterheat. If both systems should fail simultaneously, a service-water storage tank would supply sufficient cooling water to provide the necessary emergency cooling. In the event of a failure in the condenser, the evaporative cooler could be directly cooled with the demineralized-water system from a 3200-gal-head storage tank.

A failure in the system for supplying service-water to an HWCTR D_2O-cooled loop will cause the reactor to scram immediately. If it should not scram, the loop temperature and pressure will gradually increase. In order to minimize the rate of increase, a loop surge tank downstream of the main heat exchanger provides a reservoir of cool D_2O in the primary loop circuit for emergency cooling. It is necessary, however, that the reactor scram within 1 or 2 min to prevent rupture of the seal between the loop and the reactor.

Analysis of the CVTR pressurized-water loop indicated that as little as 9 gpm of 110°F and 100-psi water (normal rating: 1500 psi, 100 gpm, 570°F) would provide sufficient emergency cooling water to remove the heat generated in the test fuel rod without approaching burnout conditions in the in-pile section, as indicated in Table II-1.

In the PRTR gas-cooled loop, the problem is to prevent over-heating of the calandria aluminum shroud tube. A backup helium coolant system with capacity sufficient for 15 min is provided from a bottled-helium

Table II-1. BURNOUT CALCULATIONS FOR EMERGENCY COOLING OF CVTR LOOP

Water Flow, gpm	Outlet Temperature, °F	Ratio of Burnout Flux to Maximum Heat Flux
7	284.5	0.87
8	263.5	1.36
9	246.0	1.84

supply. In the event of a coolant failure, the helium will be automatically admitted to the shroud-tube coolant loop and to the main loop.

Loop Power Failure

Electrical power failure to an in-pile loop operating in a power reactor, in contrast to a research reactor, is less likely because of the close proximity of the power source. Nevertheless, this type of accident must be considered credible for loops in both types of reactor. For the EGCR loops, which will be located in a power reactor, for example, the immediate effect of an electrical failure would be that the loop compressors, the demineralized-water pumps, and the river-water pumps would cease to operate. Because of the coastdown characteristics of the compressors, a reactor scram would result in the test specimen power decreasing more rapidly than the gas flow would decrease. The peak fuel temperature that would be reached would not be sufficient to damage the fuel element. Once the compressor stopped, the loop gas flow would continue by natural convection.

In the HWCTR heavy-water loop, if the ac power supply to the circulating pumps fails, the flow will decrease linearly to one-third of

its original value,[23] at which point it will be maintained constant by an emergency dc power supply. The D_2O will begin to boil in 30 sec if the reactor does not scram; and subsequently, the seal between the loop and the reactor will rupture.

To assure a reliable power supply for the PRTR gas-cooled loop, an emergency bus can be energized in the event that the normal power fails by either of two emergency sources: the PRTR diesel generator or the emergency generator in the 300-area power house.

Coolant Circulator Failure

Perhaps the loop component most likely to fail is the compressor or coolant circulating pump, and such failure could be for a variety of reasons. For example, loss of motor torque could be due to failure of the motor-generator set, connecting wiring, or compressor-motor winding. In the case of a compressor, it could be due to a bearing or impeller failure. To protect against such contingencies, each EGCR gas-cooled loop has three compressors in series, any two of which are capable of maintaining design flow conditions.

In the CVTR pressurized-water loop two possible hazard conditions were considered; first, one of the two pumps might have been de-energized. The analysis indicated that the failure of one pump would increase the local boiling in the in-pile section, but the burnout flux would not be reached. If both pumps became de-energized, the pump coastdown would have matched the following empirical equation, which was determined by actual coastdown experiments:

$$1/Q = (8.7 \times 10^{-3})\ t + (1/Q_o) \quad ,$$

where Q is the flow rate in gpm at time t, and Q_o is the initial flow rate. Calculations indicated that a delay in the scram of up to 2.5 sec could possibly be tolerated without bulk boiling of the coolant or burn-out of the fuel rods. A flywheel was incorporated in the primary blower motor-generator set to maintain gas circulation for 1 min during the switchover from normal to emergency power.

Primary Containment System Failure

Leakage from in-pile loops can be classified in four categories: (1) leakage to the surroundings, (2) leakage to the loop secondary container, (3) leakage to the reactor containment structure, and (4) leakage to the reactor system. The first is by far the most serious and is usually minimized in in-pile loop design by double containment of the loop coolant. In the second and third cases, it is interesting to note that the exact location of the leak can be important in determining the seriousness of the hazard. For example, in the EGCR loops a large leak immediately downstream of the flowmeter would be the most serious, because the flowmeter would not immediately sense a flow rate low enough to scram the reactor. When the loop pressure decreased 30%, the reactor would scram, but there would be a time lag of as much as 2 1/2 sec before the scram, and thus a higher maximum temperature would exist in the test specimen than for a similar size leak elsewhere in the loop. The maximum temperature reached by the fuel specimen would depend on the amount of stored thermal energy. The secondary container surrounding the EGCR loop is sized so that it will contain an entire loop volume, and therefore the normally open cell vent line can be automatically closed in the case of loop rupture.

The fourth type of leakage, namely, leakage into the reactor system, is not as critical as the three types described above when the loop is operating in a reactor having a similar environment. For example, if the EGCR loops were operating with helium as the coolant, the pressure would equilibrate with the reactor gas pressure at slightly above 300 psia in such an accident, and no severe damage to the test specimen would occur.

In the HWCTR loops, the coolant is normally at a pressure 500 psi greater than the pressure in the reactor vessel. Protection of the system from an excessive differential pressure between the reactor and the loop is provided by positive and negative pressure rupture disks. In the event of a reactor scram, it would be possible for the seals to rupture if the pressure differential between the reactor and loop were not carefully controlled or limited. A transient analysis study has indicated that the necessary control can be achieved by limiting the gas volume in a loop surge tank to 55 gal for a constant bypass of 87.35% of loop coolant around the heat exchanger.

In the event of a high radiation level in the PRTR loop, the vent line will be automatically closed. If emergency cooling is being injected into the loop at the time, a 100-psi rupture disk is provided to permit blowdown into the reactor containment vessel.

Failure in the In-Pile Section

Mechanical failures inside the in-pile sections of most loops would be hazardous because they might result in blockage of coolant flow in the loop. In the EGCR loops, this would become particularly serious when the flow attemperator was in use if it affected the ability to bypass

part of the coolant around test specimens. A blockage at the test specimen could cause increased flow in the bypass circuit. Under this circumstance, the only protection would be the indication of a temperature rise of the thermocouples on the test specimen. To gain additional reliability in the EGCR loops, a second flow-measuring device was added directly above the sample to record flow in that branch of the circuit.

A hazard in pressurized-water loops is a vapor-lock condition caused by a high rate of heat input at the test section. Local boiling conditions were checked in the in-pile section of the CVTR loop. Table II-2 indicates the results for the fuel rod in the highest neutron flux zone.

Table II-2. LOCAL BOILING IN CVTR LOOP

Percentage of Normal Design Flow	Surface Temperature, °F	Temperature for Local Boiling, °F
50	605.5	605.3
75	606	605.7
100	604.4	605.7

No local boiling was expected to occur when the loop was operated at design flow. At 75% of rated flow, boiling would occur in the last 7 in. of the rod, and at 50% flow (equivalent to the loss of one pump) boiling would occur in the last 13 in. of the rod. The possibility of burnout was checked at the outlet end of the fuel rods, and the results are summarized below:

Percentage of Normal Flow	Ratio of Burnout Flux to Maximum Loop Flux
50	2.14
75	2.55
100	3.00

It is evident that even the failure of one pump (50% flow) would not have resulted in reaching a burnout flux condition in the test section.

The HWCTR boiling D_2O loop can experience a similar difficulty from somewhat different circumstances. In the case of a reactor scram, the pressure reduces at the rate of about 5 psi/sec. The lowering of pressure in the loop causes continued flashing in the suction line of the loop pump, probable vapor buildup in the pump, and the loss of coolant to the test assembly. To avoid these hazards, it is proposed to quench the D_2O stream and subcool the D_2O liquid in a quencher immediately downstream of the in-pile section. The quenching will be accomplished by the injection of cool D_2O.

The CVTR loop in-pile section was designed to use a series of baffles that would serve to provide a stagnant film of water that would prevent the pressure tube from overheating. Thermocouples were provided so that in the event of a baffle rupture the change in temperature in the stagnant-water columns would be detected in sufficient time to avoid an excessive temperature at the Zircaloy pressure tube.

Interaction with the Reactor

The results of interaction between the reactor and the loop can be twofold: the loop can affect the reactor or the reactor can affect the loop. In the HWCTR loop, for example, if a half rod falls from the center of the reactor core, the reactivity can increase by as much as 0.006 k_e and cause transient boiling in the fuel assembly in the liquid D_2O loop that might result in a pressure buildup sufficient to break the rupture disk discussed previously.

The CVTR pressurized-water loop was designed to operate in a reflector position of the WTR in a flux that would be approximately one-half the average core flux and with a fuel loading that would be about 20% less than the loading of one WTR cartridge. For this reason the reactivity effect on the WTR would have been negligible ($\sim$0.001 $\Delta k/k$). The only way to introduce reactivity would have been by physical displacement of the fuel to a position of higher worth. To prevent this, the in-pile pressure tube was restrained to a fixed radial position by tie rods attached to the reactor tank.

Interaction between the PW-19 liquid-metal loop and the reactor was investigated by analyzing the effect of a 0.3% step increase in the ETR reactivity with a subsequent normal reactor scram. It was conservatively calculated that the cladding temperature would reach 2153°F, which is considered safe, because the melting point of the cladding is in excess of 3000°F. (F. H. Neill)

ARGONNE TRANSIENT REACTOR TEST FACILITY

The function and capabilities of the Argonne Transient Reactor Test Facility (TREAT) and some of the initial experiments performed using the reactor were described previously.[28-31] The main uses for TREAT have been for fuel-element meltdown experiments and for studies of metal-water reactions during transients.[32-34]

TREAT is air cooled, has homogeneous urania-graphite fuel, and has a graphite-moderated and -reflected core with a central test facility. The design of the core is such that it has a large negative temperature coefficient of reactivity. The heat capacity of the graphite acts to limit the temperature of the TREAT core after the maximum design energy release of 1000 Mw-sec. Typically, the duration of the power surge in TREAT is 0.2 to 0.5 sec, during which time the specimen temperature rises to its maximum.[31] Generally, the temperature of the test specimen decreases to about 60% of the maximum in 20 sec. The shape of the power and temperature transients produced by TREAT are controlled by introducing a specified excess reactivity and allowing the negative temperature coefficient to control the transient, or by introducing the excess reactivity and "clipping" the power transient by control rod insertion. The axial flux or power gradient in TREAT is somewhat different from that which would occur in a fast reactor (in terms of fissions per cubic centimeter per second as a function of axial position), and provisions have been made for shielding the test element to produce the desired thermal flux pattern with respect to axial position.

Fuel-Element Meltdown Experiments

At the time this review was prepared, results of 29 series of meltdown experiments had been reported. Descriptions of these experiments are given in Table II-3. The types of fuel elements that have been tested under various transients are as follows: EBR-II Mark I pins with type 304 stainless steel, noibium, or tantalum cladding containing cast U–5% fission fuel, Fermi Core A elements consisting of U–10% Mo clad with zirconium, and bulk UO_2 pellets clad with type 304 stainless steel or tantalum.

The three basic types of transients referred to in Table II-3 (temperature-limited, clipped, and flat-topped) indicate various rates of heating and time at the peak temperature. The detailed results for each of the experiments shown in Table II-3 are too voluminous for presentation here. For the purposes of this review, it is of interest to observe the general behavior of the three basic types of fuel element when tested under transients that produced destruction of the fuel element.

The events that occur in the EBR-II Mark I element tests as the power input is increased are the following:

1. Voids appear in the sodium bond between the fuel alloy and the cladding because of vaporization of the sodium. This occurs when the cladding temperature exceeds about 800°C. (The sodium in the bond is, of course, somewhat hotter than this.)

2. The uranium-iron eutectic forms at the fuel-steel interface in the case of the stainless steel-clad EBR-II elements at cladding temperatures above about 960°C. In experiments with an axially shaped flux, this occurs at temperatures as low as approximately 800°C.

Table II-3. DESCRIPTION OF EXPERIMENTS PERFORMED IN TREAT

Series No.	Number of Experiments Performed	Type of Experiment
I	4	Preliminary temperature-limited transients on EBR-II Mark I elements, no cooling
II	6	Preliminary clipped transients on EBR-II Mark I elements, no cooling
III	9	Additional experiments as in I and II
IV	6	Temperature-terminated transients on bonded and unbonded EBR-II Mark I elements, no cooling
V	6	Special experiments using quartz container for element, no cooling
VI	9	Clipped transients on Fermi Core A fuel elements, no cooling
VII	6	Transients on tantalum- and niobium-clad EBR-II elements, no cooling
VIII	4	Preliminary flat-topped transients on EBR-II Mark I elements, no cooling
IX	3	High-energy release tests on EBR-II Mark I elements, no cooling
X	3	Slow heating, long-time experiments on EBR-II Mark I elements, no cooling
XI	4	Flat-topped transients on Fermi Core A elements, no cooling
XII	6	High-total-energy-input experiments on EBR-II Mark I elements, no cooling
XIII	4	High-total-energy-input experiments on niobium-clad EBR-II Mark I elements, no cooling
XIV		Initial experiments on EBR-II Mark I elements in stagnant sodium
XV	6	Flat-topped experiments on uncooled EBR-II Mark I elements, with longer time at peak power than in VIII
XVI	5	Flat-topped experiments on uncooled Fermi Core A elements
XVII	10	Experiments on uncooled EBR-II Mark I elements with "shaped" axial power distribution

Table II-3. (continued)

Series No.	Number of Experiments Performed	Type of Experiment
XVIII	4	First EBR-II Mark I elements tested in transparent facility in temperature-limited transients, no cooling
XIX	4	Second series on stagnant-sodium-cooled EBR-II Mark I elements
XX	2	Thermocouple-energy-release calibration experiments using EBR-II Mark I element with inside and outside thermocouples
XXI		Continuation of XVIII
XXII	4	First transients on UO_2 clad in type 304 stainless steel EBR-II tubes
XXIII	3	Experiments on EBR-II Mark I elements with pressurized sodium as bond
XXIV	5	Second series of experiments in transparent facility using two Fermi Core A elements, two stainless steel EBR-II elements, and one tantalum EBR-II element
XXV	4	Second series on UO_2 clad in stainless steel and tantalum tubes
XXVI	4	Experiments on EBR-II Mark I elements in transparent facility
XXVII	4	Additional experiments on EBR-II Mark I elements with axially shaped flux
XXVIII	5	Third series on UO_2 clad in stainless steel and tantalum tubes
XXIX	4	Experiments on uncooled cluster of seven EBR-II Mark I elements with axially shaped flux

3. Cladding penetration occurs, and the molten fuel alloy is ejected violently from the element in directions perpendicular to the axis of the fuel element. This occurs at cladding temperatures above about 1000°C. In the case of niobium- and tantalum-clad EBR-II elements, no damage occurs until the cladding temperature exceeds about 1400°C, at which time

the cladding ruptures and molten fuel is violently ejected from the element.

Failure of the stainless steel-clad bulk UO_2 fuel elements occurs when the cladding temperature exceeds about 1375°C. (The melting point of type 304 stainless steel is 1400°C.) It should be noted that these experiments were conducted on unirradiated oxide elements; thus no fission gases were present. If pressure stresses existed in the cladding because of fission-gas release from the fuel, failure of the oxide elements would be expected to be a somewhat more complicated process.

The Fermi Core A elements, consisting of U–10% Mo clad in zirconium, begin to warp during transients when the cladding temperature reaches about 1000°C. Failure of the cladding occurs at a temperature of about 1200°C. Failure of the element apparently occurs first by deformation and cracking of the zirconium cladding, and the result is somewhat less violent than in the case of the EBR-II elements.

Metal-Water Reaction Studies

The studies of metal-water reactions in TREAT are performed in a manner similar to that used in the meltdown experiments, except that the fuel element sample is surrounded by 200 cm^3 of water at 25°C in an autoclave. The autoclave is placed in a dummy fuel can and inserted into the central facility in TREAT. The transients are performed, and the extent of reaction of the water with the metal is computed from the amount of hydrogen produced based on the following assumed reactions:

$$2Al + 3H_2O \rightarrow Al_2O_3 + 3H_2$$
$$Zr + 2H_2O \rightarrow ZrO_2 + 2H_2$$
$$U + 2H_2O \rightarrow UO_2 + 2H_2$$

$$Fe + H_2O \rightarrow FeO + H_2$$
$$C + H_2O \rightarrow H_2 + CO$$

As can be inferred from the above, reactions of water with aluminum, Zircaloy-2, uranium and uranium alloys, stainless steel, and graphite have been studied. The fuels used, in addition to uranium, to produce sufficient fission heat for the required power transient have been mixed oxide pellets (81.5 wt % ZrO_2, 9.1 wt % CaO, 8.7 wt % U_3O_8, 0.7 wt % Al_2O_3), UO_2 pellets, UO_2-stainless steel and aluminum dispersions, and UC in graphite.

There have been seven experiments performed on bare 0.2-in.-diam uranium and U–5% Zr–1.5% Nb alloy pins and 11 on bare 0.064-in.-diam uranium wires. Ten additional experiments were performed on uranium clad in Zircaloy-2 with 3- and 15-mil-diam defects in the cladding. For the uranium wires, the extent of reaction for an integrated power of 216 cal/g of uranium was 0.4, 7.5, and 17.2% for reactor periods of 515, 267, and 96 msec, respectively. These results indicate the combined effects of the higher peak power for the shorter periods and the deviation from adiabatic heating of the wires. Data from correlation of the extent of reaction with integrated power for reactor periods of approximately 100 msec are shown in Table II-4.

The effect of cladding the uranium in defective Zircaloy-2 tubes was to increase the amount of fines produced, but the extent of reaction of the uranium with the water appeared unaffected for energy inputs up to 100 cal/g of uranium. The uranium alloy behaved in the same manner as the unalloyed uranium.

Table II-4. Uranium-Water Reactions for Reactor Period of 100 msec

Fission Energy Input, cal/g of U	U-H_2O Reaction, %	Chemical Energy Produced by Reaction, cal/g of U	Condition of Pin After Transient
50	0.4	2.4	Pins not melted (<50 cal/g)
100	2.4	14.0	Pins partially melted (50-100 cal/g)
150	5.0	30.0	Pins completely melted; globules and fine particles formed in transients >100 cal/g
200	8.9	53.0	
300	23.8	142.0	
450	50.0	298.0	

A summary of the results of other experiments is given in Table II-5. It can be seen that for the same energy input and reactor period the aluminum dispersion is more resistant to chemical reaction with water than the type 304 stainless steel. For the cases involving these cladding materials and mixed oxide fuel, aluminum and stainless steel behaved similarly, with up to 0.7% reaction at an energy input of 500 cal/g, whereas 15.5% of the Zircaloy-2 reacted at this energy input. It appears that the results for stainless steel-clad mixed oxide and UO_2 elements are anomalous, although the experimental data on each are quite self-consistent. The data on graphite fuels were obtained recently and should be considered preliminary.

It is apparent that the behavior of fuel elements under transients such as those produced in TREAT is quite complex and that extrapolations of data on either the meltdown or the metal-water reaction experiments should be made with care. Plans for the use of the TREAT facility in the near future involve experiments on clusters of fuel elements both in stagnant and flowing water and sodium. Two loops are planned for insertion

Table II-5. SUMMARY OF METAL–WATER REACTIONS

Type of Fuel Pin	Reaction	Reaction for a Period of about 100 msec, %				Threshold Energy for Destruction of Element, cal/g	Calculated Peak Adiabatic Central Temperature, °C
		At 200 cal/g	At 300 cal/g	At 400 cal/g	At 500 cal/g		
Zircaloy-2-clad mixed oxide	Zr–H_2O	<0.3	3.6	9.4	15.5	301	
Unclad 90 wt % type 304 stainless steel–10 wt % UO_2 cermet	Stainless steel–H_2O		4.2	8.1	12.0	395	2550
Type 304 stainless steel-clad mixed oxide	Stainless steel–H_2O	0	0	0.1	0.6		2300
Type 304 stainless steel-clad UO_2	Stainless steel–H_2O	1.2	5.4	11.7	19.0	174	2200
Aluminum-clad mixed oxide	Aluminum–H_2O		0.2	0.4	0.7	273	
Unclad 90% Al–10% U_3O_8 cermet	Aluminum–H_2O		1.3	2.9	4.5		
Unclad graphite–UC dispersion	Carbon–H_2O						≈2500[a]
Unclad graphite–UC dispersion partially hydrolized							≈1700

[a]During this transient, a 25% carbon–water reaction occurred.

in the reactor for these experiments. Experiments on preirradiated fuels are also planned. (J. R. Weir, Jr.)

SPERT PROGRAM STATUS REPORT

The goals, general aims, and methods of the SPERT (Special Power Excursion Reactor Test) program were reviewed in a previous issue of Nuclear Safety.[35] It is the aim of this review to extend the previous report in time to the end of 1961. The program of each SPERT facility is reviewed in turn.

SPERT-I

The SPERT-I facility consists of a small tank, open to the atmosphere, in which reactors of the open-pool type are tested. A test program was carried out in this facility using the ORNL BSR-II, a compact stainless steel core.[36] In this clean, cold reactor, significant statistical variations in the time elapsed between reactivity insertion and power surge were observed when no artificial source was present at the time of reactivity insertion.[37] Delay times in the range 0.1 to 1.0 sec were observed for excursions with periods as short as 3 msec. This implied that, in the absence of strong neutron sources, either internal from previous operation, or external, relatively long time intervals might be available for reactivity insertion mechanisms to act before the shutdown mechanisms, internal or external, could act. With this same core, a series of transients was undertaken both with and without the mechanical shutdown system in operation, and it was observed that over a range of reactor periods the mechanical system would prevent the reactor damage that would occur if only the inherent shutdown mechanism were brought into play; however, even with this fast mechanical shutdown system, which was especially designed to minimize the electronic and mechanical delay times, there existed

a range of excursions for which the mechanical system was ineffective, and these were the class of most severe excursions that could lead to major catastrophes.[38,39]

The same reactor was also used for a number of different measurements of the kinetic parameter ℓ/β_{eff}, using the excursion data, reactor noise analysis, reactor oscillator, static 1/v absorber, and pulsed-neutron methods.[38,40] The results obtained from all these very different techniques agreed within the error limits set for each.

Further work with SPERT-I has been aimed at learning more about the specific individual mechanisms that change reactivity in this type of reactor during transients. For this purpose capsule experiments were performed to obtain information on the effects of moderator expansion by transfer of heat from fuel plates and by fuel plate expansion and on the effects of moderator expulsion by boiling and by radiolytic gas formation.

Early work[38] demonstrated that moderator expulsion occurred to a sufficient extent to account for shutdown, but the data were inconclusive as to the relative importance of radiolytic gas and steam formation. The importance of boiling and its rapid onset with bubble formation was demonstrated by the use of a camera-and-periscope arrangement that permitted high-speed photography. The photographs showed that, in a 10-msec transient, bubble growth occurred in about 5 msec after the sudden onset of nucleate boiling.

An elaborate capsule has been used that includes pressure, displacement, and velocity transducers, as well as a sapphire-windowed observation port.[41] Tests with pure aluminum plates in the capsule showed no

observable trace of radiolytic gas formation for excursions as fast as 10 msec. Tests with fueled plates in the capsule were then performed,[41,42] and the onset of boiling was observed as a distinct break in the fuel-plate surface temperature curves. In some tests, boiling onset was postponed or suppressed by pressurizing the capsule up to 2400 psig. Up to the last date covered by this review (December 1961), the analysis of these tests had not been published.

Concurrent with the work described above, Wasserman[43] carried out an investigation of low-power, large-amplitude, sinusoidal reactivity perturbations using a reactivity oscillator capable of variable frequency. For large amplitudes, the "linear" assumption usually made is no longer valid, and the amplitude-independent transfer function must be replaced by an amplitude-dependent "describing function." Good agreement was achieved between the theoretical and observed values of the describing function for oscillations with a fundamental-mode amplitude of about 80% of the mean neutron level and a second-harmonic amplitude of about 25% of the neutron level. With these amplitudes the difference between the transfer function and the describing function at the lowest calculated frequency (where the difference would be expected to be largest) is about 15%.[38,41,43] In general, the agreement of the experimental results with the calculated values was quite good in the measured frequency range from about 2×10^{-3} to 20 cps. Such discrepancy as does exist in the low-frequency results is ascribable to the effects of inaccuracies in the Keepin-Wimmet delayed-neutron data used for the theoretical calculations.

Following completion of the work with plate-type cores of fully enriched fuel, the SPERT-I facility was used for excursion tests on cores

of 4% enriched UO_2 fuel rods.[44] These rods consisted of a 6-ft-long, 1/2-in.-o.d., 28-mil-wall, welded-seam, stainless steel tube containing 1600 g of 4% enriched UO_2 powder compressed to a density of 9.45 g/cm^3. During preliminary test runs in a plate-type core containing two UO_2 rods, one of the tubes split along a line defined by ten holes drilled through the steel wall for thermocouple installation and contaminated the tank with about 700 g of UO_2 powder. (This occurred during an 8.2-msec transient that reached a peak power density in the rod of about 50 kw/cm^3.) In subsequent tests with shorter periods and unpierced steel rods, no discernible distortion or splitting occurred.

The core with low-enrichment UO_2 fuel elements had a square lattice with a pitch of 0.663 in. Static tests showed a negative temperature coefficient ranging from 0.2 cents/°C at 20°C to -2.0 cents/°C at 80°C. A uniform void coefficient of 39% of the moderator volume (0.024 cents/cm^3) was also measured.[45] This accounted for most of the temperature coefficient, with an additional amount from Doppler broadening of the absorption resonances in the U^{238}. The core was shown to be undermoderated, with a negative reactivity effect for insertion of any single fuel pin into a previously water-filled core position.

Transient tests were then performed with the fuel pins unconfined except at the bottom grid plate.[44,46-48] For periods shorter than 100 msec, the burst behavior differed markedly from that of the fully enriched plate cores. In the intermediate region from 100 to 40 msec, three or more poorly defined power peaks were seen, whereas in the region shorter than 40 msec, a two-peak burst was observed. The explanation appears to lie in the existence of two shut-down mechanisms with different time

constants: the prompt Doppler effect and a slower moderator-density effect. There appears to be a definite mechanism for positive reactivity addition as a result of fuel-pin bowing, which, in this undermoderated core, increases reactivity by increasing the core size and the moderator-to-fuel ratio. The bowing is due to temperature gradients across the pin and not to pressure effects. The progress of the reactivity compensation during a transient is, first, the Doppler-effect reduction of reactivity in the amount of about -0.25 cents/°C, then, a reactivity increase as the bowing resulting from the temperature gradient occurs (this leads to a second power peak), and, finally, shutdown by moderator expulsion as a result of boiling at the pin surfaces when the heat finally reaches the cladding surface.

Experiments were also performed with a constrained core.[44,47] In this case the curve of peak power did not exhibit the multiple-peak shape ascribed to the bowing effect. The asymptotic behavior in peak power as a function of reciprocal period was the same in the restrained as in the unrestrained core at very low and very high values of the asymptotic period, but it differed in the intermediate region where the transition from one to the other dominant shutdown mode occurred.

Digital computer calculations were performed to obtain the transient temperature distribution in the fuel pins.[49] The heat-source time and space distribution was calculated in time steps, and appropriate temperature-dependent input values were used at each step for the conductivities and specific heats. The agreement with the experimental data obtained with thermocouples in the preliminary tests performed with the plate-type core was quite satisfactory.

SPERT-II

SPERT-II, a flexible facility for performing excursion tests on a variety of cores under various temperature, pressure, and flow conditions, was completed in January 1960.[37] The first criticality experiment employed aluminum-uranium 24-plate fuel elements and eight 17-plate control elements that were attached in pairs to four drives. The critical mass was 4.69 kg of U^{235}. The operating core was loaded to have 2 dollars excess reactivity under maximum design conditions of 375 psi and 400°F; this required 6.03 kg of U^{235}. Thereafter, a core was loaded that was designed to have a positive void coefficient region in the core center. For this purpose the center of the core was loaded with, effectively, eight elements of eight plates each, and it was surrounded with the 24-plate elements to make up the rest of the core. A positive void coefficient of 1.2×10^{-2} cents/cm^3, averaged over the eight-plate region, was attained. For the central four elements alone, the coefficient was 2.7×10^{-2} cents/cm^3.

A series of three cold, clean cores was then used to study the intrinsic (external source-free) neutron levels in aluminum-U^{235} reactors. For all three cores, a source intensity of about 0.36 neutrons per sec per gram of U^{235} was obtained.

Static measurements were then made with a core consisting of 12-plate fuel elements, and, among other measurements, a pressure coefficient of 0.05 cents/psi was obtained at 86°F, which became 0.04 cents/psi at 400°F. Most of this effect appeared to be due to vessel expansion rather than to water compression.

The SPERT-II tank was then cleaned and prepared for stagnant D_2O transient experiments. First, a compact D_2O core was loaded with seventy-two

12-plate fuel elements in close-packed configuration. This required 6.36 kg of U^{235} for criticality. Then, an "expanded" core was loaded in which each 22-plate fuel element was surrounded by six empty lattice positions; eight "empty" positions were loaded with tubular cadmium control rods. With this configuration only 3.08 kg of U^{235} was required for criticality. In this core, at a pressure of 260 psig, the temperature coefficient varied linearly from -2.0 to -4.4 cents/°F at 300°F.[41]

The value of the kinetic parameter ℓ/β_{eff} was measured with this core in a novel way by observing the statistical fluctuations in the counting rate of a neutron detector.[42] This method, developed by deHoffman,[50] requires only the observation of the variance-to-mean ratio of counts as a function of counting time at a single point in the core. In this way a value of 110 msec was obtained. Void coefficients in the fuel elements were also measured and found to have a value in the neighborhood of -0.02 cents/cm^3.

Excursion experiments were then carried out from an initial temperature of 20°C, at atmospheric pressure, without forced cooling.[45] The reactivities of the step insertions ranged from 40 cents to 3 dollars and produced periods from 10 sec down to 50 msec. In general the peak powers were higher than for SPERT-I (H_2O) reactors with the same reciprocal period. Also, after the initial burst, sustained power oscillations were observed that did not occur under similar initial conditions in H_2O cores but were like the oscillations observed when large amounts of reactivity were compensated by bulk steam formation. The experiments strongly indicated that steam formation and bulk boiling in the fuel elements are the important reactivity-compensating mechanisms in these expanded, D_2O-moderated reactors.

It is of interest that relatively large void fractions are required to compensate for the reactivity. For the 50-msec excursion, fully one third of the moderator volume inside the fuel elements had to be steam, since the bulk heating (i.e., interelement moderator heating) was too small to account for a significant amount of reactivity compensation. This large expulsion of moderator for short-period excursions led to large pressure differentials across the fuel elements, which led to some bowing of the fuel plates. It was observed in these experiments[46] that, as expected for long-lived systems, the curve of compensated reactivity at the time of peak power increased monotonically with the reciprocal period, α, whereas in short-lifetime reactors there is a minimum in the curve at about the value of α corresponding to prompt criticality.

These tests were then extended to include initial system pressures of 375 psig, although still initially at room temperature.[47] As would be expected, for long-period transients, where the boiling mechanism was not involved, the peak power versus α curves were the same as in the unpressurized transients; but, for shorter transients, the pressure delayed the onset of boiling and thus increased the peak power by about a factor of 1.5. The energy released, however, during the transient to peak power was increased by almost a factor of 2. Also, as expected, there was a domain of α in which boiling shutdown occurred at pressures under atmospheric pressure, whereas nonboiling shutdown occurred at pressures up to 375 psig. The rapid power undershoot and recovery following the primary peak observed at atmospheric pressure as a result of bubble growth and collapse was absent in the pressurized system. It was observed in the pressurized system that the transient pressure peak was strongly affected by the presence

or absence of an expansion volume; for example, the transient pressure peak was three to five times greater in the absence of an expansion volume.

The atmospheric-pressure transients were analyzed for evaluation of the kinetic parameter ℓ/β_{eff}. The resulting value, 100 ± 10 msec, agreed well with the value of 110 msec[49] obtained with the statistical method mentioned above.

SPERT-III

SPERT-III is a reactor facility for testing reactor systems of the pressurized- or boiling-water type up to pressures of 2500 psig and temperatures up to 650°F.[51] The system consists essentially of a reactor pressure vessel, a pressurizing tank, and two primary cooling loops with pumps capable of flow rates up to 20,000 gpm. The heat capacity of the two evaporation heat exchangers is 60 Mw for periods up to about 30 min. Like the other SPERT facilities, this one is located about 1/2 mile from the SPERT control building. The pressure vessel is intended to be safe for transient pressures and temperatures of 3500 psig and 750°F, respectively, it has an inside diameter of 48 in., and is 23 ft 9 in. in over-all height.

The first core installed in the tank consisted of stainless steel plate-type elements with an active core height of 36 in. The fuel was 93% enriched U^{235} in the form of UO_2 sintered with stainless steel powder.

Control is by means of four pairs of control-rod assemblies of the fuel-poison type. The fuel section is plate-type like the rest of the core, and the poison section is a hollow 3/16-in.-wall box made of B^{10}-loaded stainless steel. A cruciform transient rod fits into the center of the core between the four quadrants. Filler pieces shaped to fit the

cylindrical reactor skirt (tank liner) are provided to prevent excessive coolant flow around the core. These pieces are orificed to regulate coolant flow through them.

In March 1960 the first step transients were performed with SPERT-III from an initial power of 100 w at 30°C with natural-convection coolant flow.[38] As expected, the self-shutdown characteristics under these conditions were just like those of SPERT-I cores of similar design. The data obtained in these experiments serve as a base-line for evaluations of the effects of various system parameters on the burst characteristics.

The next series of tests evaluated the effect of water flow rates up to 18 fps (the maximum obtainable) on transients starting from room temperature at pressures up to 2500 psig.[42] It was observed that for periods greater than 100 msec, flow rates up to 18 fps prevented power peaks; the power merely rose monotonically to a maximum level that increased as the flow rate increased. For periods shorter than 50 msec, the initial power peak was almost independent of flow rate; however, the steady power level of the reactor after the burst was again approximately proportional to the flow rate. The pressure of the system, in the range 230 to 2500 psig, had essentially no effect on the burst shape in the range 50 to 20 msec.

A systematic study of the effect of system pressure on power excursions initiated at room temperature and with no forced coolant flow was then performed that covered the range of periods from 10 sec to 11 msec.[42] For power bursts at atmospheric pressure in which no boiling occurs before the power peak, the system pressure, up to the 2500 psig maximum attainable, has no effect on the transient, as was observed in

SPERT-II with D_2O. For shorter periods (below about 40 msec), the pressure increase raises the peak power by about 30%. Most of this increase is due to the first 50 psig of pressure, with very little change thereafter to 2500 psig. The mechanism of the effect is undoubtedly the delay of onset of boiling. Once the system pressure is higher than the saturation pressure at the temperature needed for nonboiling shutdown, further increases in system pressure have no further effect. This was indeed observed, since for any given period, a plot of peak power vs system pressure showed an increase of power with pressure, until, at the point where the saturation temperature became greater than the maximum fuel-plate surface temperature, the power curve leveled out with a sharp break.

For short-period excursions of about 11 msec, it was observed that, although the change in height of the initial burst was not great with pressure, the progress of the power profile after the peak was strongly affected. At low pressure there was a sharp, fast, power drop with an undershoot and an eventual rise in equilibrium power. At 2500 psig, however, the power remained higher and then decreased monotonically. This latter effect occurred only at the highest pressure and was associated with very poor heat transfer when the temperature at the fuel-plate surface exceeded the critical temperature of the water. Indeed, the temperature of the fuel plates was much higher and stayed high much longer after a burst at high pressure than at atmospheric pressure.

Theoretical analyses of the nonboiling reactivity compensation of SPERT-III transients which took into account only fuel-plate expansion and moderator heating were applied to these tests.[45] Comparison with

experimental data showed that only about one-half the experimental reactivity compensation was obtained from the calculations. As a check, similar analyses were made of the SPERT-I long-period (nonboiling) transients, with the same result. Other mechanisms, such as fuel-plate motion, heat transfer characteristics, radiolytic gas formation, or moderator heating by neutrons or gammas, may have to be invoked to account for the discrepancy, which remains unexplained.

During these tests, a small fission-break occurred, and the water was contaminated with short-lived fission products.[42] Examination of the core revealed significant blisters and ripples on some of the plates. In some instances the ripples were severe enough to reduce flow areas by more than 50%. The blistered elements were removed, and the tests were continued.

A test series with ramp reactivity insertion was then carried out over the pressure range available[45] with the core initially at room temperature. As previously observed in SPERT-I tests, the burst behavior was similar to that for step-inserted reactivity if the minimum period occurring during the ramp before the power peak was compared with the asymptotic period resulting from the step insertion. It was found that the peak power was relatively sensitive to the reactivity addition rate (a factor of 3 in ramp rate resulted in a factor of 5 increase in peak power) and relatively insensitive to initial reactor power (a factor of 10^6 in initial power caused a factor of 20 in peak power). The post-burst behavior was somewhat altered in ramp excursions, since reactivity was still being added, as compared with step-insertion transients. There was a larger power undershoot and a higher rate of recovery for the ramp

excursions. In these tests the ramp excursions were terminated shortly after the power peak occurred. No long-time stability tests with continued ramp reactivity insertions were included in the tests.

Next, the effects of initial system temperature and subcooling were investigated for step-transients.[46] At any initial temperature the amount of subcooling depends on the system pressure; that is, the boiling point. Initial temperatures up to 310°F and initial pressures up to 200 psig, both without forced cooling, were employed in tests at 20, 40, and 150 msec. Initial subcooling varied from 10 to 80°C. Later, the temperature and pressure limits were increased to 400°F and 2500 psig, respectively, and some tests with forced flow conditions were included.[47] The general conclusions may be stated as follows: Increased system temperature prior to the transient leads to decreased peak power, with the effect most pronounced for short periods. Increasing the initial system pressure (and hence the subcooling) for a fixed initial temperature has little effect on the peak power, for periods as short as 40 msec, but does result in slightly higher peaks for periods of about 20 msec. For tests in which boiling does not occur, the temperature rise is nearly independent of the initial temperature and depends only on the period. When boiling does occur, however, it is the dominant shutdown mode, and the peak temperature reached is then relatively unaffected by the initial temperature. As was observed before, the system pressure determines whether a given period test will attain boiling conditions or not.

Exploratory tests on the effects of coolant flow rates at high initial temperature have been performed.[49] Four tests were carried out: one at 200°F and 2500 psig, with a 14.4-fps flow velocity and a 24-msec period;

and three at 240°F and 200 psig, with an 18-fps flow velocity and periods of 200, 66, and 16 msec.

In contrast to the room-temperature experience reported above, the addition of flow reduced the peak power significantly. It also much reduced the peak fuel-plate temperature attained, which in turn led to a more rapid power drop, with undershoot and subsequent rise to a higher equilibrium value. The latter effect was also observed for room-temperature tests. This effect of reducing the power is somewhat surprising, since the reduced fuel-plate temperature should mean reduced moderator expansion, and therefore more power rise. No detailed analyses of these data had been performed, however, prior to the cutoff date of this review of the SPERT program (December 1961).

Conclusions

As a general conclusion, it may be stated that the reactivity compensating effect of void formation due to boiling is well understood and is the dominant effect when it occurs. The peak powers and fuel-plate temperatures can be understood logically from analysis of the onset and effect of boiling in all the reactors and parameter ranges investigated in the SPERT program.

In those transients in which boiling does not occur, however, because of the combination of system pressure and reactor period employed in the test, the effects of fuel plate expansion and moderator heating qualitatively explain the reactivity compensation observed, but quantitative agreement between calculation and experiment for this case appears still to be lacking. (E. G. Silver)

COMBUSTION OF REACTOR MATERIALS

The core of a nuclear reactor is made up of two or more materials that function as fuel, coolant, moderator, and structure. These reactor materials are frequently of such nature as to react exothermically with air, and thus the possibilities of such reactions must be fully appraised in analyses of accidents in which the conditions for the reactions could be created. In view of the use of such materials in existing and planned reactors, much pertinent information is being generated on graphite oxidation problems, combustion of reactor fuels, and the ignition of structural metals. Reports on these and other topics relating to the combustion of reactor materials are reviewed here.

Oxidation of Graphite

Intensive investigations of graphite oxidation have continued since the last review[52] because of the need to assess the hazards of loss of coolant from high-temperature gas-cooled reactors and to determine safe conditions for annealing air-cooled graphite reactors. Not only has there been continued measurement of the oxidation rate, as affected by many conditions, but the oxidation of graphite channels set up to simulate reactor coolant channels has also been measured.

The theory and mechanism of graphite oxidation have been reviewed by Ubbelohde and Lewis,[53] and the oxidation of graphite under conditions that might occur in gas-cooled reactors, as influenced by several variables, has been investigated by Dahl.[54] For the constant oxidation rate that follows an initial slow oxidation period, Dahl found the temperature dependence between 450 and 675°C to correspond to an activation energy

of 50 kcal, which is somewhat higher than the activation energy of 22 kcal reported by Prados (see ref. 53) as a composite value from a number of experimenters. Dahl also found that prior exposure at 550°C to a fast neutron (>0.18 Mev) dose of 4×10^{19} neutrons/cm^2·sec did not influence the reaction, in contrast with earlier studies of graphite exposed at lower temperatures. Although Dahl indicated in ref. 54 that the reaction was accelerated by exposure during oxidation to Co^{60} gamma radiation at a dose rate of 1×10^6 r/hr, subsequent experimentation has not borne out this result.* Variation of graphite specimen external-surface-to-volume ratios in the range from 8 to 20 cm^{-1} and gas flow rates from 0.2 to 5.0 scfh did not influence the oxidation rate. The increase in rate in oxygen over that in air agreed reasonably well with first-order dependence on oxygen pressure.

Graphite oxidation is known[52] to be catalyzed by inorganic impurities, and the variations in oxidation rate observed for different samples are usually attributed to this. Dahl[54] found that the oxidation rates of several types of reactor-grade graphite tested in air at 600°C varied from 4.29×10^{-3} hr^{-1} to 2.52×10^{-2} hr^{-1} and increased with increased impurity content, as measured by neutron absorption. Dahl's data on the oxidation rate are correlated with the impurity content in Table II-6. The types of graphite listed in Table II-6 are all reactor grade but were manufactured by different processes. The SP specimens are Spear Carbon Company graphite, while the remainder are National Carbon Company graphite. The delta in-hour data are a measure of the graphite cross section, with the variation being due to impurities. Although the chemical reactivity

*Personal communication, R. E. Dahl, June 1962.

Table II-6. OUT-OF-PILE OXIDATION RATES OF VARIOUS TYPES OF GRAPHITE AT 600°C IN AIR FLOWING AT 2.0 scfh AND IN-PILE DATA ON PURITY

Graphite Type	Oxidation Rate, hr^{-1}	Delta In-Hours, hr^{-1}
SP-21	0.0252	+0.027
TS-AGOT	0.0192	+0.180
SP-23	0.0187	+0.317
SP-10	0.0147	+0.671
EGCR	0.0133	+0.71
CSF	0.0052	+0.854
SP-7	0.00429	+1.10

of graphite can be influenced by a number of factors, such as type of coke, type of binder, particle size, gas permeability, etc., the direct correlation between reaction rate and purity may be seen. The purity actually determines the reactivity to a much greater extent than any of the other variables.

Lang and his co-workers[55] have combined weight-loss measurements with autoradiographic and spectrochemical studies of the distribution of impurities in graphite. The rates of oxidation of several types of graphite were found to be completely unrelated to such physical properties as density and porosity but strongly dependent on the content and distribution of impurities. A marked catalytic effect was observed to be due to the simultaneous presence of sodium and vanadium; and during oxidation, pits developed in the specimens at localized deposits containing both elements. Heating the graphite in a reducing atmosphere at 3000°C or in Freon-12 at 2500°C greatly reduced the level of catalytic impurities;[56] decreases were noted in both the rate of oxidation and the differences between the rates of oxidation of different types of graphite. The

initial rate of graphite oxidation in air was measured directly by an infrared determination of carbon monoxide and carbon dioxide in the product gas. At 620°C the rate was found to parallel the development of porosity. The same was true at 532°C for graphite purified by heating, as described above, but as-received samples reached a constant oxidation rate after a sharp increase that occurred during the first 0.1% weight loss. At both temperatures the predominant oxidation product of as-received graphite was carbon dioxide; purification effected a greater decrease in the rate of formation of the dioxide than of the monoxide.

The effects of various impregnation methods and subsequent heat treatments on oxidation of graphite in air at 550°C have been reported by Watt and Brown.[57] Liquid-phase furfuryl-alcohol impregnation increased the oxidation rate several fold, but the rate noted before impregnation could be restored by a heat treatment. Gas-phase impregnation with benzene at 750 or 850°C had little effect on the oxidation rate, and the resulting impregnated graphite could be heat treated to a slower oxidizing product. Pyrolytic graphite, of interest as a fuel coating rather than as a moderator, was found by Levy[58] to oxidize in air at a penetration rate much lower than for other types of graphite, although the rate greatly increased above 800°C.

Protection of Graphite. In the interest of reducing the hazard of reactor-graphite combustion, suppression of oxidation is being sought by coating the graphite, impregnating it with a retardant, or adding an inhibitor to the oxidizing gas. Graphite may be given a siliconized silicon-carbide coating for protection from oxidation. In a method described by Biram,[59] silicon powder is applied to the graphite surface, and firing

above the melting point of silicon produces a coating of SiC. Specimens of siliconized graphite from a number of manufacturers have been tested by Jackson[60] in flowing air at 1000°C after exposure to a fast-neutron (>0.18 Mev) dose of about 8×10^{20} neutrons/cm^2. Many of the specimens failed. Jackson concluded that for the coating to be successful the base graphite should have randomly oriented grains and should be as resistant as possible to high-temperature radiation damage. Glanville and Glinn[61] have reported a method of protection of graphite by impregnation with phosphorous pentoxide.

The inhibition of graphite oxidation by chlorine has been studied by Dahl.[62] He found the oxidation rate to be markedly reduced by small amounts of chlorine in moist or dry air in tests in the temperature range 550 to 750°C, in ozonized air at 200°C, and in air under gamma irradiation at 600 to 660°C. Graphite specimens that would ignite in air or oxygen at 730°C would not ignite up to at least 1050°C in oxygen containing about 2% chlorine. The addition of 1% chlorine to the oxygen quickly extinguished combustion of graphite at 1400°C. These results suggest that under comparable conditions gas-cooled reactors might be provided with means to introduce chlorine in order to control oxidation in the event of loss-of-coolant accidents. Of course, consideration of the use of this method would have to take into account the effect of chlorine on metals present in the reactor.

Dahl's data[62] on chlorine suppression were subsequently employed in analytical studies of the graphite oxidation that would result from the maximum credible accident in the Experimental Gas-Cooled Reactor being constructed for the AEC at Oak Ridge. These studies[63] indicated, however,

that the effect of the chlorine suppression was not sufficient to prevent runaway oxidation at the temperatures and for the air flow rates considered.

Combustion of Graphite Channels. The balance between oxidation and heat removal by air streams in graphite channels has been investigated extensively by Schweitzer and co-workers[64-67] in order to evaluate safe conditions for annealing air-cooled graphite reactors. For safe operation, the heat produced in the channel by reaction of the graphite with air must not exceed the quantity of heat removed by the flowing air. As the air passes through the channel, it increases in temperature and in content of combustible carbon monoxide, so it becomes a progressively poorer coolant. Thus, under some conditions, a point in the channel is reached where there is a balance between heat production and removal. Beyond this "equilibrium position," the temperature of the graphite must rise, with a concomitant increase in oxidation rate. The results of the measurements were summarized in an approximate empirical equation for the stable channel length, X_{eq}, in feet:

$$X_{eq} = 1.4 \frac{f}{D^2} - \frac{T}{8} + \frac{5 \times 10^5}{\bar{R}_{705}} + C \quad ,$$

where f is the air flow rate in scfm, D is the channel diameter in inches, T is the original uniform channel temperature, $\bar{R}_{705}$ (in $g/cm^2 \cdot sec$) is the average reactivity of the graphite at 705°C, and C is 85 under turbulent flow conditions and 86 under laminar flow conditions.

The "EGCR Burning Rig," a mock-up of an EGCR fuel channel, has been operated by Dahl.[68,69] In preliminary experiments[67] simulating only the moderator-coolant annulus, with the graphite heated to maintain adiabatic

conditions, air flow resulted in a steady temperature rise in the graphite, even at as low a temperature as 400°C. Below 600°C the rise did not exceed 0.5°C per minute, but above 700°C it became rapid. Up to 0.5% moisture in the air had a negligible effect. Prior oxidation of the graphite increased the rate of temperature rise, as expected. In experiments simulating the entire fuel channel,[69] a Globar heating element, programmed to simulate fission-product heating, took the place of a fuel element. Runaway oxidation was not observed as frequently as in the experiments with the annulus alone, but above 700°C a rapid temperature rise was always observed.

Combustion of Reactor Fuel Metals

Reactor fuel metals (uranium, plutonium, and thorium) have a strong thermodynamic potential for reaction with oxygen. Knowledge of the influence of conditions on the rates of these reactions, particularly the conditions where the reactions become very rapid, is thus important for assessing the hazards of reactors and associated operations, such as fuel fabrication. Previous reviews[70,71] have reported some of the conditions for ignition and propagation of combustion for these metals.

The oxidation of uranium above 300°C is so rapid that the heat of reaction, aided by the thermal insulation of the oxide layer, is able to maintain the uranium at temperatures well above the surroundings. This self-heating has been measured by Darras, Baque, and Leclercq[72] and by Isaacs and Wanklyn[73] by simultaneously recording the temperatures of the furnace and of the specimen being heated in flowing air. During rapid heating (200 to 600°C per hour), the temperature difference fluctuated

considerably, finally increasing sharply at 610°C, which was interpreted as an ignition temperature, although flames were not observed. Similar ignition was observed as self-heating raised the specimen temperature during prolonged heating at constant furnace temperatures above 400°C. With the furnace at a constant temperature in the range 370 to 420°C, the specimen temperature oscillated periodically, decreasing as the insulating oxide layer flaked off and increasing as a new layer grew. Similar oscillations were observed in the furnace-temperature range 650 to 710°C, although the oxide was more adherent. In the range 400 to 500°C, the oxidation rate decreased with increasing temperature; this has been confirmed[74] in experiments with the self-heating suppressed. The oxidation behavior of uranium alloyed with 1% molybdenum was similar to that of unalloyed uranium,[72] but 10% molybdenum in uranium led to formation of a protective oxide film and a greatly reduced oxidation rate.[73]

Leibowitz and Mishler[75] have found several halogenated hydrocarbons that decrease the fire-propagation rate and temperature of burning of uranium foils; however, some also decreased the ignition temperature. As little as 2% CH_3CHF_2 in the air prevented burning propagation. Schnizlein, Bingle, and Leibowitz[76] found that an electric discharge caused a marked increase in the rate of oxidation of uranium at 200°C with an oxygen partial pressure of 20 mm Hg. Bessonov and Vlasov[77] claim that circulation of oxygen has no effect on the oxidation rate of uranium and that circulation of air has a negligible effect above a pressure of 200 mm Hg, although they present no supporting data. Megaw and co-workers[78] found that the oxide largely left the uranium metal as it was formed during oxidation in air in the temperature range 400 to 1000°C. Rather large (1 kg) specimens of uranium were tested. During oxidation of irradiated specimens, the extent of radioiodine escape from the uranium paralleled the

extent of oxidation, and most of the iodine appeared to be adsorbed on the oxide. Tetenbaum and co-workers[79] have determined the particle-size dependence of the ignition temperature of uranium powder.

"Reactive" uranium carbide was found by Murbach[80] to ignite at 275°C in oxygen or 350°C in air. After ignition, it reacted rapidly until it was converted to a lower oxide (U_3O_7 or UO_2), and then it continued to oxidize at a slower rate until conversion to U_3O_8 was complete. According to Murbach, "The oxidation characteristics of uranium carbide are dependent on its past history. Freshly arc-melted uranium carbide oxidizes slowly, even at 500°C. 'Aged' material oxidizes at a much more rapid rate."

Ignition and Burning of Structural Metals

Some structural metals such as zirconium and magnesium also react with air. The oxygen pressures required to ignite zirconium and titanium at relatively low temperatures have been measured by Littman and his co-workers.[81-85] Both metals ignited when a freshly formed surface was exposed to oxygen at a sufficient pressure. For either metal, 50 psi was sufficient in dynamic tests with gas flowing past the specimen. In these tests, disk-shaped specimens were ruptured, with the gas confined on one side. Higher pressures were required under static conditions where ignition was obtained on breaking specimens in tension or on breaking glass ampoules containing specimens. The minimum oxygen pressure for titanium ignition in static tests was about 350 psi, independent of surface treatment, specimen form (rod or foil), and alloy composition (A-55, A-110AT, or 6Al-4V). The pressure required to ignite zirconium was more variable.

The minimum of 300 psi was obtained for foil with the oxide film removed either by etching or by dissolution in the metal by vacuum annealing. Similarly cleaned Zircaloy-2 ignited at 400 psi, while oxidized zirconium foil required 450 psi. Some zirconium-rod specimens that were not treated to remove the oxide ignited in as low as 500 psi of oxygen, while others failed to ignite in up to 800 psi of oxygen. Rods broken in torque rather than in tension failed to ignite in oxygen up to 2000 psi. The oxygen pressure required for ignition of either metal was greatly increased by dilution of the oxygen with helium or with steam. The pressure required to ignite titanium in static tests decreased with an increase in temperature, reaching 150 psi at 500°C and 75 psi at 1000°C.

Neither metal would ignite under water. Burning titanium, ignited in oxygen, was quenched in water. Similar quenching of burning zirconium competed with the reaction between zirconium and water. Either metal could be ignited by impact when in contact with liquid oxygen, but neither could be ignited by impacts up to 125 ft-lb in gaseous oxygen up to 2000 psi.

Magnesium, aluminum, iron, stainless steel, tantalum, niobium, and molybdenum would not ignite on rupture in oxygen at 2000 psi and 300°C. Commercial magnesium was found to ignite in dry air at 645°C and in moist air (1.8% water vapor) at 610°C on rapid heating by Darras, Baque, and Leclercq.[72] By prolonged heating at constant temperature, ignition was possible at 615°C in dry air and 585°C in moist air. Very nearly the same ignition temperatures were observed for magnesium alloyed with (1) 0.65% zirconium, (2) 0.9% zinc, and (3) 0.8% aluminum, 1% calcium, and 200 ppm beryllium.

The nature and rate of burning of several metals in oxygen and oxygen-nitrogen mixtures were found by Harrison and Yoffe[86] to depend on the physical properties of the metal and its oxide. The fairly volatile aluminum and magnesium specimens burned in the vapor phase, while molybdenum, which has a volatile oxide, burned at the metal surface. The formation of a molten mixed oxide-metal phase by iron and titanium led to burning at the surfaces of these liquids. Zirconium oxide, being refractory, usually formed a solid film on the metal. Several organic halogen compounds were found by Leibowitz and Mishler[75] to decrease the rate and temperature of burning of zirconium foils in air. Burning was stopped by 2% of either CF_3Br or CF_3Cl in the air.

Summary

New developments in the oxidation of graphite of interest in nuclear safety include inhibition by chlorine,[62] oxidation of simulated reactor channels,[64-69] acceleration by gamma radiation,[54] and the possibility of production of a low-porosity oxidation-resistant graphite.[57] The newer results are, in general, consistent with previous correlations and theories,[52,53] and they add to the general understanding of the process.

Progress continues in defining the ignition conditions and combustion behavior of structural and fuel materials. Of major reactor interest is the measurement[72,73] of the self-heating of oxidizing uranium and the establishment[81-85] of ignition limits for zirconium and titanium in compressed oxygen at room temperature. (Sigfried Peterson)

References

1. E. C. Miller et al., Identification of the Maximum Credible Loss-of-Pressure Accident from the Experimental Gas-Cooled Reactor (EGCR), Dec. 13, 1961, Oak Ridge National Laboratory (unpublished).

2. Saxton Nuclear Experimental Corporation, Applications to U. S. Atomic Energy Commission for Reactor Construction Permit and Operating License, Docket No. 50-146, Part B: Preliminary Hazards Summary Report.

3. H. Mason, Selection and Application of Materials for the PWR Reactor Plant, USAEC Report WAPD-PWR-971, Westinghouse Electric Corporation, July 1957.

4. Summary of Shipboard Failures of High Pressure Piping 1948-56, Merchant Ships, Newport News Shipbuilding and Drydock Company, CVA (N)-1001.

5. H. B. Ketchum, A Simple Method for Calculating the Maximum Size of a Ductile Rupture in Pressurized Systems, USAEC Report WAPD-TM-56, Westinghouse Electric Corporation, July 1957.

6. Pacific Gas and Electric Company Preliminary Hazards Summary Report, Humboldt Bay Power Plant Unit No. 3, Docket 50-133, April 15, 1959.

7. J. Landoni, Differential Pressure Across the Core Following a Reactor Coolant System Rupture, Experimental Gas-Cooled Reactor, USAEC Report Allis-Chalmers Study No. 225, August 14, 1959.

8. J. Landoni, Loss of Pressure Accident, Hot-Leg Double-Ended Rupture (Blower Behavior Considered), Experimental Gas-Cooled Reactor, USAEC Report Allis-Chalmers Study IV-303-1, June 11, 1960.

9. K. Shure, Fission Product Decay Energy, Bettis Technical Revue, WAPD-BT-24, Westinghouse Electric Corporation, December 1961.

10. P. L. Walker, Jr., Frank Rusinko, Jr., and L. G. Austin, Gas Reactions of Carbon, Advances in Catalysis, Vol. XI, pp. 133–221, Academic Press, New York, 1959.

11. Graphite Oxidation, Nuclear Safety, 2(4): 8–13 (June 1961).

12. J. W. Prados, Estimation of Reaction and Heat Release Rates for Graphite Oxidation, USAEC Report CF-60-10-131, Oak Ridge National Laboratory, October 19, 1960.

13. M. H. Fontana, Status Report on Oxidation Analysis for the EGCR, unpublished report, Oak Ridge National Laboratory, June 1961.

14. B. Lewis and G. von Elbe, pp. 75–93 and 579–86 in Combustion, Flames, and Explosions of Gases, Academic Press, New York, 1951.

15. J. H. Perry (ed.), pp. 1582–88 in Chemical Engineers' Handbook, 3rd ed., McGraw-Hill, New York, 1950.

16. W. B. Cottrell et al., Fission Product Release from UO_2, USAEC Report ORNL-2935, Oak Ridge National Laboratory, September 13, 1960.

17. J. Belle (ed.), Uranium Dioxide: Properties and Nuclear Applications, Chapter 9, U. S. Government Printing Office, Washington, D. C., 1961.

18. W. B. Lewis, Behavior of Fission Gases in UO_2 Fuel, Canadian Report DL-45, Chalk River, Ontario, November 1961.

19. G. W. Parker, G. E. Creek, and W. J. Martin, Fission Product Release from UO_2 by High Temperature Diffusion and Melting in Helium and Air, USAEC Report CF-60-12-14, Oak Ridge National Laboratory, February 14, 1961.

20. Reactor Loop Experiment Hazards Evaluations, Nuclear Safety, 3(1): 31–36 (September 1961).

21. F. H. Neill and C. Michelson, EGCR Experimental Loops Preliminary Design Report, USAEC Report ORNL-TM-134, Oak Ridge National Laboratory, March 27, 1962.

22. Heavy-Water Moderated Power Reactors Progress Report for August, 1959, USAEC Report DP-415, E. I. Du Pont Company, October 1959.

23. Heavy-Water Moderated Power Reactors Progress Report for June, 1960, USAEC Report DP-515, E. I. Du Pont Company, October 1960.

24. Heavy-Water Moderated Power Reactors Progress Report for November, 1959, USAEC Report DP-445, E. I. Du Pont Company, December 1959.

25. C. Dishman, Hazard Analysis CVTR In-Pile Loop Experiments, USAEC Report CVNA-56, Carolinas-Virginia Nuclear Power Associates, Inc., May 1960.

26. D. Vassallo, Forced Convection Liquid Metal In-Pile Loop Hazards Evaluation, Part I, USAEC Report TID-12271.

27. N. G. Wittenbrock, Plutonium Recycle Test Reactor Final Safeguards Analysis, Supplement 4, Gas-Cooled Loop Analysis, USAEC Report HW-61236, General Electric Company, March 1962.

28. G. A. Freund et al., TREAT: A Pulsed Graphite-Moderated Reactor for Kinetic Experiments, Proceedings of the Second United Nations International Conference on the Peaceful Uses of Atomic Energy, Geneva, 1958, Vol. 10, p. 461, United Nations, New York, 1958.

29. Reactor Accidents, Nuclear Safety, 1(4): 32–35 (1960).

30. Argonne Transient Reactor Test Facility (TREAT), Nuclear Safety, 2(1): 26–27 (1960).

31. E. S. Sowa, First TREAT Results – Meltdown Tests of EBR-2 Fuel, Nucleonics, 18(6): 122–124 (June 1960).

32. Argonne National Laboratory Reactor Development Program Progress Reports: USAEC Reports ANL-6215, August 1960; ANL-6234, September 1960; ANL-6253, October 1960; ANL-6269, November 1960; ANL-6295, December 1960; ANL-6328, February 1961; ANL-6343, March 1961; ANL-6355, April 1961; ANL-6374, May 1961; ANL-6387, June 1961; ANL-6399, July 1961; ANL-6409, August 1961; ANL-6433, September 1961; ANL-6473, November 1961; ANL-6485, December 1961; ANL-6509, January 1962; ANL-6525, February 1962; ANL-6544, March 1962; ANL-6565, April 1962.

33. R. C. Liimatainen et al., Studies of Metal-Water Reactions at High Temperatures, USAEC Report ANL-6250, Argonne National Laboratory, January 1962.

34. C. E. Dickerman et al., Studies of Fast Reactor Fuel Element Behavior under Transient Heating to Failure, USAEC Report ANL-6334, Argonne National Laboratory, August 1961.

35. J. C. Haire, Jr., A Summary Description of the SPERT Experimental Program, Nuclear Safety, 2(3): 15–22 (March 1961).

36. E. G. Silver and J. Lewin, Safeguard Report for a Stainless Steel Research Reactor for the BSF (BSR-II), USAEC Report ORNL-2470, Oak Ridge National Laboratory, 1958.

37. Quarterly Technical Report, SPERT Project, Jan., Feb., March 1960, USAEC Report IDO-16617, Idaho Operations Office, March 31, 1961.

38. Quarterly Technical Report, SPERT Project, April, May, June 1960, USAEC Report IDO-16640, Idaho Operations Office, April 7, 1961.

39. F. L. Bentzen, The Merits of Inherent Shutdown vs Mechanical Shutdown of a Plate-Type, Water-Moderated and Reflected Reactor in a Runaway Condition, USAEC Report IDO-16722, Idaho Operations Office, November 3, 1961.

40. A. H. Spano, Perturbation Measurement of ℓ/β_{eff} Using a 1/v Absorber, USAEC Report IDO-16638, Idaho Operations Office, March 3, 1961.

41. Quarterly Technical Report, SPERT Project, July, Aug., Sep. 1960, USAEC Report IDO-16677, Idaho Operations Office, May 10, 1961.

42. Quarterly Technical Report, SPERT Project, Oct., Nov., Dec. 1960, USAEC Report IDO-16687, Idaho Operations Office, June 1, 1961.

43. A. A. Wasserman, Contributors to Two Problems in Space—Independent Nuclear-Reactor Dynamics, USAEC Report IDO-16755, Idaho Operations Office, March 30, 1962.

44. A. H. Spano et al., Self-Limiting Power Excursion Tests of a Water-Moderated Low-Enrichment UO_2 Core in SPERT-I, USAEC Report IDO-16751, Idaho Operations Office, February 28, 1962.

45. Quarterly Technical Report, SPERT Project, Jan., Feb., March 1961, USAEC Report IDO-16693, Idaho Operations Office, June 30, 1961.

46. Quarterly Technical Report, SPERT Project, April, May, June 1961, USAEC Report IDO-16716, Idaho Operations Office, September 15, 1961.

47. Quarterly Technical Report, SPERT Project, July, Aug., Sept., 1961, USAEC Report IDO-16726, Idaho Operations Office, December 15, 1961.

48. W. K. Ergen, Preliminary Analysis of the Kinetic Behavior of a 4%-Enriched UO_2 Reactor in SPERT-I, unpublished report, Oak Ridge National Laboratory, September 29, 1961.

49. Quarterly Technical Report, SPERT Project, Oct., Nov., Dec. 1961, USAEC Report IDO-16750, Idaho Operations Office, March 15, 1962.

50. F. deHoffman, Intensity Fluctuations of a Neutron Chain Reactor, USAEC Report MDDC-382, 1946.

51. R. E. Heffner and T. R. Wilson, SPERT-III Reactor Facility, USAEC Report IDO-16721, Idaho Operations Office, October 25, 1961.

52. Graphite Oxidation, Nuclear Safety, 2(4): 8–13 (June 1961).

53. A. R. Ubbelohde and F. A. Lewis, Chapter IX, Chemical Transformation of Graphite to Volatile Products, pp. 157–176 in Graphite and Its Crystal Compounds, Oxford University Press, London, 1960.

54. R. E. Dahl, Oxidation of Graphite Under High-Temperature Reactor Conditions, USAEC Report HW-68493, Hanford Atomic Products Operation, July 1961.

55. F. M. Lang, P. Magnier, S. May, and G. Pinte, J. chim. phys., 58(1): 47–52 (1961).

56. F. M. Lang, S. Keraudy, C. Koch, and P. Magnier, J. chim. phys., 58(1): 53–60 (1961).

57. W. Watt and A. R. G. Brown, Oxidation of Impregnated Graphite, Nuclear Graphite OEEC Dragon Project Symposium, 1959, Report NP-11221 (1961), pp. 237–247.

58. M. Levy, Oxidation of Pyrolytic Graphite in Air Between 1250° and 1850°F, Ind. Eng. Chem. Prod. Research and Dev., 1(1): 19–23 (March 1962).

59. J. G. S. Biram (to English Electric Co.), Improvements in and Relating to Protection of Graphite Bodies Against High Temperature Oxidation, British Patent 866,818, May 1961.

60. J. L. Jackson, The Effect of Irradiation on Siliconized-Silicon Carbide Coatings for Graphite, USAEC Report HW-68494, Hanford Atomic Products Operation, February 1961.

61. T. Glanville and J. Glinn, Improvements in or Relating to the Protective Treatment of Graphite, British Patent 876,091, August 1961.

62. R. E. Dahl, Evaluation of Chlorine Inhibition of Graphite Oxidation as a Gas-Cooled Reactor Safeguard, USAEC Report HW-67255, Hanford Atomic Products Operation, April 1961.

63. J. O. Kolb and W. B. Cottrell, Effectiveness of Chlorine Suppression, pp. 10–13 in Gas-Cooled Reactor Program Quarterly Progress Report for Period Ending March 31, 1962, USAEC Report ORNL-3302, Oak Ridge National Laboratory, July 1962.

64. D. G. Schweitzer, G. C. Hrabak, and R. M. Singer, Oxidation and Heat Transfer Studies in Graphite Channels, I. The Effect of Air Flow Rate on the $C-O_2$ and $CO-O_2$ Reactions, Nuclear Sci. and Eng., 12(1): 39–45 (January 1962).

65. D. G. Schweitzer and D. H. Gurinsky, Oxidation and Heat Transfer Studies in Graphite Channels, II. Thermal Changes with Time and Distance in Air-Cooled Graphite Channels, Nuclear Sci. and Eng., 12(1): 46–50 (January 1962).

66. D. G. Schweitzer and R. M. Singer, Oxidation and Heat Transfer Studies in Graphite Channels, III. The Chemical Reactivity of BNL Graphite and Its Effect on the Length of Channel Cooled by Air, Nuclear Sci. and Eng., 12(1): 51–58 (January 1962).

67. D. G. Schweitzer, Oxidation and Heat Transfer Studies in Graphite Channels, IV. Combined Effect of Temperature, Flow Rate, Diameter, and Chemical Reactivity on the Length of Channel Cooled by Air, Nuclear Sci. and Eng., 12(1): 59–62 (January 1962).

68. R. E. Dahl, Experimental Evaluation of the Combustion Hazard to the Experimental Gas-Cooled Reactor, Preliminary Burning Rig Experiments, USAEC Report HW-67792, November 1961.

69. R. E. Dahl, Final Report, Experimental Evaluation of the Combustion Hazard to the Experimental Gas-Cooled Reactor, USAEC Report HW-71182, Hanford Atomic Products Operation (to be published).

70. Oxidation of Reactor Metals, Nuclear Safety, 1(4): 20–22 (June 1960).

71. Pyrophoricity of Uranium and Zirconium, Nuclear Safety, 2(2): 17–19 (December 1960).

72. R. Darras, P. Baque, and D. Leclercq, Combustibility of Magnesium and Uranium Heated in Different Gaseous Media, French Atomic Energy Commission Report NP-9715, July 1959; to be available in English as USAEC Report AEC-tr-4836.

73. J. W. Isaacs and J. N. Wanklyn, The Reaction of Uranium with Air at High Temperatures, British Atomic Energy Authority Report AERE-R-3559, December 1960. This report carries the restriction: "This document is intended for publication in a journal, and is made available on the understanding that extracts or references will not be published prior to publication of the original, without the consent of the author."

74. L. Baker, J. D. Bingle, G. Klepac, and R. Koonz, Isothermal Oxidation of Uranium at High Temperature, pp. 160–162 in Argonne National Laboratory Chemical Engineering Division Summary Report July, August, September 1961, USAEC Report ANL-6413, Argonne National Laboratory.

75. L. Leibowitz and L. W. Mishler, Burning Propagation and Ignition Studies – The Effect of Halogenated Hydrocarbons, pp. 162–168 in Argonne National Laboratory Chemical Engineering Division Summary Report July, August, September 1961, USAEC Report NAL-6413, Argonne National Laboratory.

76. J. G. Schnizlein, J. D. Bingle, and L. Leibowitz, The Effect of Electric Discharge on the Oxidation Kinetics of Uranium, J. Electrochem. Soc., 108(12): 1166–7 (December 1961).

77. A. F. Bessonov and V. G. Vlasov, On the Mechanism of Oxidation of Metallic Uranium, Fiz. Metall. Metallov., 12(3): 403–408 (September 1961).

78. W. J. Megaw, R. C. Chadwick, A. C. Wells, and J. E. Bridges, The Oxidation and Release of Iodine-131 from Uranium Slugs Oxidizing in Air and Carbon Dioxide, Reactor Science and Technology, J. Nuclear Energy, pts. A and B, 15: 176–84 (1961).

79. M. Tetenbaum, R. Wagner, L. W. Mishler, and J. G. Schnizlein, Uranium and Uranium Carbide Ignition Studies, Trans. Am. Nuclear Soc., 4(1): 89–90 (June 1961).

80. E. W. Murbach, The Oxidation of "Reactive" Uranium Carbide, USAEC Report NAA-SR-6331, Atomics International, July 1961.

81. F. E. Littman and F. M. Church, Reactions of Titanium with Water and Aqueous Solutions, Quarterly Report No. 2, USAEC Report AECU-3582, Stanford Research Institute, June 1958.

82. F. E. Littman and F. M. Church, Reactions of Metals with Oxygen and Steam, USAEC Report AECU-4092, February 1959.

83. F. E. Littman and F. M. Church, A Study of Spontaneous Ignition of Metals, Final Report, April 1, 1959–July 30, 1960, USAEC Report SRIA-29, August 1960.

84. F. E. Littman, F. M. Church, and E. M. Kinderman, A Study of Metal Ignitions, I. The Spontaneous Ignition of Titanium, J. Less Common Metals, 3: 367–78 (1961).

85. F. E. Littman, F. M. Church, and E. M. Kinderman, A Study of Metal Ignitions, II. The Spontaneous Ignition of Zirconium, J. Less Common Metals, 3: 379–97 (1961).

86. P. L. Harrison and A. D. Yoffe, The Burning of Metals, Proc. Roy. Soc. (London), Series A, 261: 357–370 (May 1961).

III. CONTROL AND INSTRUMENTATION

THE DESIGN OF SAFETY SYSTEMS FOR NUCLEAR REACTORS

J. E. Binns*

Editors Note: The editors of Nuclear Safety believe the nuclear industry needs to explore and develop criteria for the design and construction of reactor safety systems. In addition, we believe that this paper, based on experience and philosophy, is a step in the direction of developing such criteria. Agreement on every point raised by Mr. Binns is not expected and should not occur in a field as new as reactor safety systems. The editors hope that this article will stimulate further thought and discussion among the designers of reactor safety systems, whom we wish to remind that each design expresses a particular safety system philosophy, whether stated or unstated as criteria.

Much attention has been devoted to the analysis of reactor safety requirements and the design of reactor safety systems. Considerable concern has been expressed for the standardization of equipment. In this paper the writer, while renouncing any attempt to standardize equipment, has tried to clarify his own "philosophy" of reactor safety, distilled from many years of involvement in reactor operations, and to lay down a few guide lines for the consideration of the designer.

Reactor Incidents

In a nuclear reactor plant, management will be concerned with the prevention of accidents of all kinds, which, in addition to the types common to other industries, will include radiation accidents. These may be

---

*J. E. Binns, who retired from the nuclear instrumentation and controls field in 1961, was Group Leader of the Reactor Instrument Group at Brookhaven National Laboratory for approximately 15 years, starting in 1946. Mr. Binns received the B.S. degree from Case Institute of Technology in 1934 and later attended Columbia University. He served as a project engineer for the Sperry Gyroscope Company, Inc., from 1941 to 1943 and as a research scientist in the Substitute Alloy-Material Labs at Columbia University.

the result of equipment failure or human failure in the handling of the products and byproducts of the reactor, or they may be so-called "incidents."

An incident is the result of something that has gone wrong in the basic processes of the reactor, with consequent damage to the reactor and more or less wide-spread danger to plant personnel and even to the surrounding populace. The management will concern itself not only with incident prevention but also with incident control to limit the damage and the danger — but this is another subject.

Incident Prevention

Reactor incidents may be prevented in three ways:

1. By not permitting the basic reactor processes to approach an unsafe condition.

2. By a prompt and drastic reduction of power whenever the processes do approach an unsafe condition.

3. By designing the basic processes so that it will be difficult or impossible for unsafe conditions to develop.

The designer of a new reactor will always strive for inherent safety by method 3 if this is compatible with other design aims; he will not be disposed to sacrifice these other aims if the same degree of safety can be obtained by method 2. Method 1 is implemented not only by good design of the reactor and its normal operating controls, but by good operating practice, with all that the term implies for organization, procedure, training, and maintenance. Method 2 is accomplished by means of the safety system, the subject of this article. Most practical reactor designs will be found to employ all three methods.

Continuity of Operation

One of the goals of reactor operation is to run the reactor without interruption of the planned schedule; but, where a safety system is installed, interruptions are possible as a result of (1) accidental approach of the reactor processes to an unsafe condition, with resulting automatic emergency reduction of power, and (2) accidental automatic reduction of power because of a failure of the safety system.

If an ideal reactor could be designed whose processes could not possibily become unsafe, there would be no need for a safety system, and therefore both causes of possible interruptions would be removed. The operation of the reactor would be perfectly free of the danger of an incident and perfectly free of interruptions resulting from the fear of an incident. In the absence of such an ideal reactor, the designer will have to select a safety system that will meet the requirements both of safety and of continuity of operation.

How Much Safety and Continuity?

In order to make such a selection, the designer must draw on past experience in the operation of similar reactors, if available, as well as on general principles. Given a reactor, complete with equipment for normal and emergency control, the operating management must decide what will be the normal operating level and the trip level.

The trip level will be a compromise between high productivity and high risk of damage or incident on the one hand and low productivity and low risk on the other hand. In principle, if the risk can be considered one of the operating costs and expressed in dollars per hour, and if the

over-all operating cost and the value of the product can both be determined as functions of trip level, then the correct trip level will be the one which gives the highest product value per dollar of operating cost.

It is assumed here that the operating level bears a fixed relation to the trip level. This is not necessarily true. In fact, for each trip setting, there is only one most economical operating level, which is a compromise between the high cost of accidental shutdowns when operation is close to the trip level and low product value when operation is far below the trip level. It is therefore necessary to compare the net product values that correspond to the most economical operating levels for a range of trip levels and select the highest one.

It should be recognized that the treatment of the risk of a major incident as an operating cost is difficult, if not impossible, to justify. In a new industry such as the nuclear industry, damage resulting from an incident, even where calculable, is poorly understood by the general public. This makes it very difficult to put a dollar value on such damage. Even if the cost of an incident could be expressed in dollars, the probability of its occurrence would be extremely difficult to estimate with any precision. Therefore extreme measures must be used to reduce the probability of an incident. The difficulty of knowing when the probability has been reduced sufficiently is due to factors such as:

1. The tendency of the individual to discount risks which are of an extremely low order of magnitude, even those which careful analysis would reject as unacceptable. There is a tendency unconsciously and selfishly to equate a number such as "once in ten lifetimes" to "virtually never," when, upon sober reflection, such a thought would appear to be indefensible.

2. The mistake of estimating probabilities on the basis of insufficient experience. If a certain event has not occurred during a ten-year period, a strong but false sense of security is likely to prevail, even though all might agree that such an event could not be tolerated more often than once in a thousand years.

3. The real difficulty of getting significant experience on events of very low probability.

4. The difficulty of calculating even relative risks which involve variable and unknown factors, especially human factors. It would be nice to provide the operators with a meter which could tell them "You are now operating at a risk of once in 10^4 years" or even "You are now operating at a risk ten times that of yesterday." This is not feasible. The more human factors enter into the risk, the less feasible it becomes.

Safety System Failures

There are just two ways in which a safety system can fail:

1. Unsafely, in a way that renders it incapable of taking appropriate action should such action become necessary. This will be referred to as a failure of the First Kind.

2. Safely, by taking the same action as the result of the failure as would be taken as the result of an unsafe process condition and thus interrupting operation. This will be referred to as a failure of the Second Kind.

There can be analogous failures of the individual channels which comprise the safety system, although these would not necessarily lead to an interruption of operation. These too will be referred to as failures of the First and Second Kinds.

Safety Through Redundancy

In reactors where the consequences of an incident would be serious, a principle is used which has been called redundancy. In place of a single safety channel for each kind of information, two or more independent channels are installed. By the use of n channels, the chance of a failure of the First Kind will be reduced from p (for a single channel) to p^n.

It might seem that by use of redundancy it would be easy to make an incident virtually impossible — but beware! The work "independent" points to may pitfalls. Are such channels really independent? What element have they in common, which failing, can cause a simultaneous failure of the First Kind in all channels? A few such things are the following:

1. Design. No amount of redundant channels can prevent failures of the First Kind which result from the fallibility of the designers. One obvious fault of the design itself that would cause all channels to fail simultaneously would be the failure to include essential information in the data which are fed into the safety channels. Another would be the failure to design into the safety channels the necessary information relative to the kinetics of the plant. Still another would be the failure to recognize common elements which are unavoidable and for which special provision must be made. An example of such an element is a circuit element or mechanical element such as a relay or a wire through which all information must funnel in order eventually to actuate the safety control elements in the reactor. Such a common element can be tolerated only if its only possible failures are "safe," that is, failures of the Second Kind. Another example is the reactor structure, which, if sufficiently damaged, as by earthquake or explosion, could prevent the functioning of

all control elements. In reactors built on sites where there is an earthquake hazard, premonitory seismic information is sometimes used as a scram signal to anticipate such damage. Fluid control elements have also been used.

2. Operating policy, from the highest national authority down to the management of the individual plant. In spite of safe design, in the absence of a strong, specific, over-all policy on safety matters, unsafe changes can be too easily authorized. While it is true that a reactor is always operated on the basis of a calculated risk, the acceptable risk must be stable and not subject to the state of mind of one or a few individuals.

3. Operating organization, including maintenance organization. Simultaneous failure of all channels can result from human failures such as a mistake in calibration; a mistake in setting the trip point; a failure to post the authorized trip point; a failure to make operability tests, especially after making changes; doing work on all channels of one kind during a shutdown when the operability of the channels can be verified only by starting up the reactor; making unauthorized changes in construction or adjustment; disabling safety channels without authorization; a mistake in an authorized procedure for disabling of a safety channel. Such failures can be minimized by establishing clear lines of authority and responsibility; preparing comprehensive, clearly-written, up-to-date procedures; indoctrinating, training, and discipling personnel; and adequate exercise of important procedures for all concerned.

In addition, such human failures can be minimized by making the safety instrumentation an active rather than a dormant part of the plant;

by designing for minimum maintenance, especially minimum shutdown maintenance; by designing for complete surveillance of the safety instrumentation by the operating crew; and by designing so that the disabling of safety channels can be outlawed from the operating procedure.

Safety Through Failure-to-Safety

Through design, a safety system may be made safer, that is, freer from failures of the First Kind by use of reliable components, conservatively applied, and use of components in such a way that if they fail, the failure will be of the Second Kind rather than of the First Kind. This is known as failure-to-safety.

In connection with a given component, the amount of effort that it is worthwhile to expend in order to make it fail safe will depend on the probability of its failing. This effort will also be limited by the law of diminishing returns, the designer bearing in mind that complete failure-to-safety is, for practical purposes, unattainable.

Safety Through Testing

The purpose of the testing of a safety channel is to uncover latent faults of the First Kind, due both to equipment and to personnel, such as those listed above under the heading "Safety Through Redundancy." Testing may be manual, manual and automatic, or, conceivably, completely automatic.

A completely thorough test of a safety channel would begin with an actual and deliberate rise of the reactor process variable to the trip point and would end with actual safety action, such as a scram. It would test the channel for adequate speed of response. It would also include

an observation of the trip point, a comparison of the trip point with the authorized and posted value, a verification of the accuracy of the instrument used to measure the trip point, and the reporting and recording of the results of the test.

Coupled with the test must be a course of action, either procedural or automatic, which is consistent with the result of the test. If the test uncovers a fault of the First Kind, operation should not continue until the fault is cleared either by replacement, repair, or adjustment. In a redundancy-coincidence system (see below), operation may be safely continued only after deliberately tripping the channel which contains the fault. It is preferable, where possible, to make the course of action automatic. This means that as soon as the test discovers a fault, the channel is automatically tripped, so that effectively all faults of the First Kind are converted to faults of the Second Kind. Such automatic action would, however, be practical only in the case of automatic testing. In case a fault of the First Kind is found by manual testing, or indeed whenever the operability of a safety channel is in doubt, the only consistent course of action is to deliberately trip the channel.

How Much Testing?

The need for some testing is incontrovertible. It remains to decide in each case:

1. Should the testing take place manually or automatically?
2. How often should the tests occur?
3. How much of each channel should be included in the test?
4. To what extent is simulation of signals permissible?

Item 1 will be discussed under the heading "Relation of Safety System to Operators." Item 2 will be answered in a way which depends on the answer to item 1. With automatic testing it is feasible to make the tests much more frequently than with manual testing. Also, the application of the coincidence principle (see below) has an important bearing on the frequency of testing. Without the use of coincidence, the actual tripping of a channel on test is feasible only at the time of a scheduled shutdown. Even in a coincidence system, the tripping of a channel on test results in a higher probability of an accidental scram. The higher the frequency of the tests and the longer the duration of the tests, the greater the probability of a scram.

In answer to items 3 and 4, there is a temptation to state, offhand, that the complete safety channel should be tested and that no simulated signals are permissible. This comes near to asking for the impossible. If a safety system were subjected to a test whose thoroughness was beyond any possible question, it would be necessary deliberately to produce a set of process conditions which, if unchanged, would cause an incident and to verify that the safety system took appropriate action to prevent such an incident. Such a test is patently ridiculous, however, since the purpose of the test is to prevent incidents which might occur as the result of latent faults of the First Kind, and the test in the very act of uncovering a fault of the First Kind would cause an incident.

It is evident therefore that any useful test must depend not on observation alone but also on simulation coupled with inductive reasoning. Such a test will therefore be subject to errors of reasoning. In order to have any confidence in the test, this reasoning must be simple,

straightforward, the product of several minds and much reflection, and, consequently, arrived at during the design of the test rather than during its performance. The following example will serve to show how pitfalls can exist in even very simple procedures of this sort.

Consider the case of a simple safety circuit that is supposedly set to scram at 100 Mw, this being the setting previously decided on as the highest safe setting. A test is desired which will prove that the scram will occur when the reactor power has risen to 100 Mw. It is not operationally feasible actually to raise the power to 100 Mw, and therefore it is decided to simulate such a power electrically by means of a signal generator. The ion-chamber current flows through a meter which at operating levels has been calibrated in terms of reactor power. A test current is then superimposed on the chamber current and is increased until the meter reads 100 Mw, at which time it is noted that the scram takes place. From this it is inferred that a scram would occur if the reactor power actually rose to 100 Mw.

The fallacy of this reasoning lies in the extrapolation of the power calibration. Unless the trip point is quite close to the operating point, it is quite possible that on actual power rise the scram would occur far above the 100-Mw level, <u>or even not at all</u>. This results because a linear relationship exists between the power (or neutron flux) and the chamber current only over a limited range. Above this range the rate of current rise becomes less and less. At still higher powers, saturation occurs, and the chamber current becomes constant, yielding no information about further power increases.

Continuity Through Coincidence

In reactors where the consequences of a failure of the Second Kind are important, a principle is used which has been called coincidence. This requires the use of a number n of independent redundant channels, all carrying the same kind of information and connected so that no safety action will be taken unless at least m of these channels trip simultaneously. The result of such a connection is to increase the chance of a failure of the First Kind from p^n to p^{n-m+1} and to decrease the chance of a failure of the Second Kind from P to P^m, where P is the chance of an accidental trip in one of the channels. Numerical coefficients have been omitted as being insignificant factors as compared with p and P.

By use of a sufficient number of channels, any required degree of continuity may be attained, while retaining the required degree of safety, provided the channels are truly independent. This is a proviso that it is difficult to fulfill. They will not be truly independent if there exists even one element common to all channels. A familiar example of such an element is the public utility power supply from which the equipment in all channels is energized. No matter how many channels are used, the coincidence connection will not prevent a scram when the power fails, since all channels will trip on power failure. It should be noted, however, that in the case of a research reactor which depends on the same power supply for cooling, this particular shortcoming is of little moment, since loss of cooling calls for a shutdown anyway. In the case of a power reactor, the desirability of providing independent means for deriving instrument power from the reactor itself should be examined. The required number of such independent power supplies would equal the greatest number

of redundant channels connected in coincidence. While channels which carry identical information must be powered from different supplies, channels which carry different information may be powered from the same supply.

A scrutiny of the system to discover common elements that are subject to failures of the Second Kind will reveal the extent to which the coincidence principle can be profitably applied. In addition to increased continuity of operation, the use of coincidence offers other important benefits which result in increased safety:

1. The possibility of doing virtually all maintenance work during operation. This not only eases the maintenance problem on reactors which have little scheduled downtime but reduces the danger that the reactor will be started up with some channels inoperative because of a mistake that was made during shutdown maintenance.

2. The feasibility of enforcing an iron-clad rule that any safety channel which has been disturbed during a shutdown in any way which renders its operability incapable of being tested during shutdown must be <u>diliberately tripped</u> until its operability is proved during operation.

3. The removal of all valid excuses for disabling of safety channels — a dangerous practice which complicates operation and violates the principle that the safety system must <u>never</u> be changed as a result of "on the spot" decisions.

Practical Safety Systems

Typical of the kinds of <u>safety information</u> which can be used are the following: reactor power, reactor period, fuel temperature, coolant temperature, rate of temperature rise, rate of coolant flow, readiness of

rod scram equipment, decision of operator or others to shut down, and so forth. What items of safety information to incorporate into the safety system will have to be decided by a study of the reactor processes.

The number and varieties of safety action selected for the emergency control of a given reactor will depend on the importance of continuity of operation in relation to the costs of initial construction and maintenance. Some of the less drastic kinds of action cause only partial interruptions. The simplest, but most drastic action is the scram, that is, the rapid actuation of all safety control elements to reduce the power to its lowest level (shutdown). Other types of safety action are variously described as stop, reverse, slow rundown, fast rundown, setback, runback, and the like, whose definitions vary with local usage.

The simplest safety system is one which consists of a single channel of each kind of safety information and which takes only one kind of action, the scram. Such a safety system may be adequate for a reactor in which the consequences of an incident are not too serious and where continuity of operation is not too important.

The use of a "two out of three" system represents a tremendous step forward in both safety and continuity. This is the simplest practical application of the redundancy and coincidence principles. Without its use, the reactor can hardly be operated without resorting to the disabling of safety channels, which fact alone is sufficient justification.

Relation of Safety System to Operators

A safety system may be regarded as a robot operator that is completely independent of the human operators and which does not interfere in the

operation until, on the basis of process information which it continuously accepts and instructions that have been designed into it, it takes some type of safety action. This is, however, as ideal state of affairs which it is difficult to realize in practice.

One of the areas in which the ideal of independence of the operators is frequently not realized is that of logic and decision. While enough logic ought to be designed into the safety system to take care of all contingencies, in many cases it has been left to the operators to reason and decide under what circumstances certain parts of the system are to be operative. Devices are often provided by means of which the operators can disable these parts. The reasoning of the operators is, to be sure, supplemented by rules of operation, but in spite of these rules mistakes occur which result in loss of safety and loss of continuity of operation. There is actually little excuse for such a deficiency if, in the early stages of the safety system design, it is kept in mind that the requirement for minimum on-the-spot decisions is a very important one.

There is another respect in which the safety system cannot be completely independent of the operators. While it may be independent of the persons in a certain part of the operating organization, it cannot be independent of all human intelligence. Even if a "black box" could be designed and built which would continue indefinitely to work infallibly according to the decisions made by the design intelligence, the fallibility of that intelligence would still have to be reckoned with. Since there can never be assurance that the design is perfect, or even adequate, the safety system will always depend on human intelligence in that its design will be changed when this is considered necessary. Even worse,

any practical device will itself be fallible and will require human maintenance for checking and repair.

To what extent should the operators to be involved in the checking and repair of the safety system? The answer "as little as possible" is a safe but impractical one, for there is no theoretical limit. The practical limit will have to be decided on the merits of each case. It is not the purpose here to set up such limits but simply to present some pertinent thoughts.

1. The use of automation in the checking and repair of the safety system should follow about the same principles with regard to man-machine relationship as any other automation. Let the machine perform the drudgery, and depend on the man's intelligence wherever this contributes to job satisfaction and is economically sound and operationally safe.

2. Tests to detect faults of the First Kind are usually very important. They should be frequent, tireless, and unvarying in adherence to instructions. When a fault is discovered, the prescribed course of action should be followed to the letter, no matter how infrequently such course of action is called for. Since faults of the First Kind are by their nature required to be infrequent, the operators will soon tire of making tests which "never" show anything wrong. Since corrective action is very seldom called for, the operators will remember their instructions imperfectly. All this seems to argue for the machine.

3. Not all safety channels have equal importance. This should be considered when deciding whether to use automation in testing.

4. The posting of trip points can hardly be done by a machine. The same applies to calibration. A machine could calibrate itself, but only by comparison with another machine, which in turn would have to be calibrated.

The safety system should not only be relied on for more consistent reasoning than can be expected from the operators but also for swifter decisions and prompter action. To this end, it should make the best possible use of all available information. Take, for instance, the protection of the reactor against a dangerous rise of temperature in its fuel elements. The safety system should initiate a safety action in time to stop the rise before it has gone to dangerous levels. To do this it must have built into it a knowledge of the inherent delay in the scram equipment and in the reactor's nuclear processes, as well as access to and utilization of information on every process variable that is a factor in determining fuel temperature, and information on the operability of the means for taking safety action. It must also be capable of prediction through the use of rate information, etc.

The Ideal Safety System

In summary, it may be stated that the requirements for the ideal safety system are:

1. It should be a "black box" which monitors the operation of the reactor with respect to safe values of certain process variables (e.g., fuel temperature) by (a) continuously computing the answers to the question: "If at this instant, a safety action of type A_1, A_2, ..., A_R, or A_L were initiated, what would be the maximum future values of process variables V_1, V_2, ... and V_L?" and by (b) initiating safety action of type A_R the instant that any one such predicted value passes its set point.

2. It should have access to all operating data that pertain to reactor safety.

3. It should have designed into it all information pertaining to the use of such operating data in the safety control of the reactor. Examples of such information would be: trip points for each variable, logic for redundancy-coincidence, logic needed to take into account the other process variables when deciding whether a given process variable has entered the unsafe range, and information on the nuclear and thermal kinetics of the reactor, as well as the delay times in the actuation of the safety control elements.

4. It should include as many kinds of safety action as are necessary in view of the required continuity of operation.

5. It should include no devices for disabling part of the system, and it must be designed so that it will never be necessary to improvise such devices.

6. System-wide failures of the Second Kind should have a probability of occurence that is acceptable in relation to the requirements for continuity of operation. For various reactors, this could range all the way from a moderate probability to virtual impossibility.

7. System-wide failures of the First Kind should have a very low probability of occurence. For most reactors they should be virtually impossible.

8. In order to reduce failures of the First Kind to a minimum, the safety system should be designed for minimum maintenance, especially the kind which must be done while the reactor is shut down.

9. In order to reduce failures of the First Kind to a minimum, the safety system should be made an active part of the plant equipment, in the sense that the operators are continually aware of its relation to

the operation and continually cognizant of its operability as a result of their own responsibility for its checking and maintenance.

EXPERIENCE WITH NRX AND NRU SAFETY SYSTEMS

The NRX and NRU reactors employ safety systems that utilize the principles of coincidence and redundancy.[1,2] In these reactor safety systems, three separate trip lines terminate in a two-out-of-three circuit which requires that at least two of the three trip lines must indicate an unsafe condition to release the safety devices. This use of coincidence allows the entire safety system to be tested, except for the actual release of the shutdown mechanisms, without interferring with normal operation of the plant. In order to prevent a reactor shutdown, only one instrument channel can be under test at any given time; thus, the channels are tested in sequence until all have been checked. To test a given instrument channel, an unsafe condition that can be sensed only by the channel in question is simulated, and the output of the associated trip line is examined to determine whether a trip occurs. In addition to allowing testing, the use of coincidence allows maintenance to be carried out on any single instrument channel while the reactor is in operation. It should be noted that cutting out any channel for maintenance should produce a trip signal of the associated trip line.

A safety system can produce an undesired reactor shutdown as the result of a safe failure, a test, or of being overhauled. The requirements of coincidence will almost certainly reduce the frequency of these undesired shutdowns. The safety system can also fail to produce a desired reactor shutdown because it has become disabled by an unsafe failure. Calculations by Siddall[1] indicate that the probability of a failure of the safety system to protect the reactor can be reduced greatly by the use of a two-out-of-three system rather than a one-out-of-two system.

The amount of calculated reduction is, however, a very strong function of the time interval that an unsafe failure is postulated to exist. In fact, all the benefits of the two-out-of-three system are derived from the reduction in this time interval. Thus adequate maintenance, which is dependent on adequate testing, is essential in the two-out-of-three system in order to attain high reliability by reducing the average duration of unsafe failures. As pointed out by Lennox, Pearson, and Tunnicliffe,[3] satisfactory operation of these systems depends on both the designer and operator. The designer must produce equipment reliable in concept and detail; the operator must ensure that it remains reliable, but the design must allow the operator to carry out this responsibility.

Effect of Sensor Location

An interesting comparison between the component failure rates in the NRX and NRU has been drawn.[4] There were many fewer failures in the NRX power-sensing and rate-sensing amplifiers than in the similar equipment in the NRU. The cause has been attributed to the difference in the ion chamber locations; while the NRX chambers were grouped together, the NRU chambers were distributed around the reactor. The output currents of the NRX chambers were almost identical, but the control rod configuration caused the NRU chambers and their associated amplifiers to have differences in their currents. Although the usual regular tests of the safety systems indicated few failures in either the NRX or NRU, any amplifier in the NRU system which disagreed with the other amplifiers during normal operation was often suspected of failure, and it was removed from service and taken to the shop for standard maintenance. A major factor in the

better performance figures of the NRX appears to have been caused by the excessive handling of the NRU equipment.

The chambers in the NRU have now been grouped together.[3] Although regrouping the NRU chambers appears to have solved one difficulty, the reviewer believes that a single failure outside the safety system can adversely affect all the chambers simultaneously to a much greater degree when they are grouped together than when they are distributed around the core. An example of such an adverse condition is the increase in local shielding introduced by some sort of foreign body brought near the grouped chambers. As indicated in the reports, there is no basic reason that the output signals of sensors of a given parameter must be identical in a coincident and redundant safety system.[3,4] Difficulties from variations between these signals could arise because the normal operating point is very near the safety system trip point and a rise to the trip level in one channel occurs while another channel is being tested or is cut out for maintenance.

Shutdowns Caused by Safety System Failures

The causes of reactor shutdowns produced by the safety systems have been placed in four categories:[3,4]

1. Operational errors, such as having two channels under test simultaneously, which should probably be charged to design errors if the error is easy for the operator to make.

2. Other safety considerations, such as the unequal ion-chamber currents in the NRU that shut down the reactor if one channel reached the trip level while another trip line was being tested or was cut out for maintenance.

3. Lack of complete independence of the three trip lines, which allowed single faults to affect more than one channel.

4. True coincidence faults.

Four instances of a reactor shutdown resulting from safety system actions were enumerated.[3] In the first two instances, the shutdowns were caused by intermittent faults that reappeared in one trip line while another trip line was undergoing maintenance. These instances are examples of true coincidental failures in the safety system. As stated in the AECL report,[3] these were faults in a single channel which recurred at a rate far in excess of the fault rate a designer would predict in estimating the failure rate by means of simple probability calculations. Before the third and fourth instances are discussed, it should be noted that in both the NRX and NRU, the ion chambers and their associated amplifiers carry out the dual functions of regulation and protection; thus, common elements are used for both control and safety.[3,4] The actual causes of these two instances of reactor shutdown are not completely clear to the reviewer, but the information presented indicates that the safety actions were prompted by power level changes initiated by the control portion of the instrumentation. It appears that the safety portion of the instrumentation behaved as it was designed to; therefore, these shutdowns were actually the result of control system actions rather than safety system failures.

The reviewer suggests that utilizing common elements for both control and safety generally results in a less reliable safety system, since a failure of a common element can produce an unsafe act of the control system and, at the same time, this same failure can prevent the affected

instrumentation of the safety system from taking the necessary safety action. An example of such a failure would be the loss of signal from an ion-chamber channel used for both control and safety. Circuits in the NRX and NRU intercompare the signals of the ion-chamber channels and automatically actuate the associated trip line of any channel in significant disagreement with the other channels.[3,4] This alleviates the reliability reduction to some extent, but it also complicates the circuits with additional monitoring instrumentation.

Reliability and Tests

The reports on the NRX and NRU state that reliability should not depend upon the routine adjustment of the instrumentation and that sudden complete failures of an instrument are more desirable than failures resulting from slowly changing instrument parameters.[3,4] A sudden complete failure leaves no doubt as to operability. Concern over the probability of a fault common to all channels is expressed, and the statement is made that physical and electrical separation of the channels seems to be the only way to improve this situation. Physical separation will increase the tendency for disagreement between channels, but the reports also state that fault finding should not rely on maintaining close agreement.

The determination of the reliability of safety systems, such as those in the NRU and NRX, will require adequate but simple tests.[3,4] The following is quoted directly from the Canadian report:[3]

> "Tests can fail if they are not properly designed. An example of poorly designed tests concerned a radiation monitor that passed its routine tests for months. The test was the simplest possible, a radioactive source was brought to the detector to ensure that the alarm rang at the correct level. However, when one day a real situation arose in which the radiation level reached

> the alarm level, no alarm was given. The test routine did not specify how quickly the radiation level should increase and, for convenience, the test source was always brought quickly to the detector. The output rose rapidly and the contacting-meter type alarm was shocked into working. When the real incident occured, the rate-of-rise of the radiation level was much more gradual, and the contacting meter failed to make proper contact."

The need for adequate test is further implied by Binns (see the preceeding article, pp. 163-181), who points out the fallacy of a test which attempts to determine whether the reactor will be scrammed by high neutron flux by superimposing an additional current on an ion chamber. The fallacy here lies in the assumption that the ion-chamber current will always be proportional to the neutron flux, when in fact, the chamber may saturate and the current may never rise to the scram setting, even when the neutron flux rises to values much higher than the scram level. The HTRE-3 incident confirms this fallacy.[5] A means to obviate the extrapolation of instrumentation performance has been described by Siddall, in which the sensor itself is made to receive an unsafe change in the variable being detected, although the reactor continues to operate normally.[2] In the case of an ion chamber, the test could be carried out by increasing the neutron flux at the chamber by removing a shield that is normally in place between the chamber and reactor.

Many designers attempt to attain safety by the use of devices which are called "fail-safe." Although it is comforting to know that a certain antipicated failure will be of such a nature as to produce an effect which trips one channel of a two-out-of-three safety system, it must be recognized that a designer can never be certain that all failures will be of this type. Therefore, this reviewer thoroughly agrees with those who feel that the real concern in the design of coincident safety systems

should be to provide a test that detects all failures, rather than to design systems which fail in only certain predictable ways.[3] (C. S. Walker)

References

1. E. Siddall, Reliable Reactor Protection, Nucleonics, 15(6): 124–129 (June 1957).

2. E. Siddall, Built-In Testing in Process Instrumentation, pp. 179–194 in Nuclear Process Instrumentation and Controls Conference, USAEC Report ORNL-2695, Oak Ridge National Laboratory, April 22, 1960.

3. C. G. Lennox, A. Pearson, and P. R. Tunnicliffe, Regulation and Protective System Design for Nuclear Reactors, Canadian Report AECL-1495, April 1962.

4. C. G. Lennox and A. Pearson, Our Changing Views on Reactor Instrumentation, IRE Trans. on Nuclear Sci., NS-8(4): 155–164 (October 1961).

5. HTRE-3 Excursion, Nuclear Safety, 1(2): 57–59 (December 1959).

IV. PLANT SAFETY FEATURES

RADIOACTIVE PLANT MAINTENANCE

Certain hazards are inherent in the maintenance of any industrial plant because it may involve disruption of services, modifications to operating procedures, and other requirements for taking a system or equipment out of service. The familiar procedures of tagging electrical circuits, valves, and controls; switching to standby equipment; and other precautions are used in virtually all plants to minimize these hazards. It is common practice in a nuclear plant to locate nonradioactive auxiliary equipment outside the containment shell or biological shield to permit routine maintenance with the least possible disruption of plant operation.

Replacement or repair of components and modifications to systems involving direct, semidirect, or remote operations in the presence of radiation or contamination differentiate nuclear from normal plant maintenance. Three primary concerns are personnel protection, prevention or control of the release and spread of activity, and preservation of system integrity.

Maintenance operations to be performed on radioactive portions of the plant should be thoroughly planned in the original design of the system or facility. Unforeseen occurrences requiring corrective action or modifications that are conceived after the original system has gone into operation can be accommodated if sufficient flexibility was provided in the design.

General Plant Maintenance

There are many similarities in the maintenance of nuclear and more conventional plants. The problem of achieving the utmost in reliability from central-station steam plants exists whether they are fossil fueled or nuclear fueled.[1] Since 100% spare capacity for maximum reliability is

rarely economically feasible, standby capacity is usually provided only for critical equipment, but special attention to design features in certain areas can contribute much to reliability.

Preventive maintenance is recommended, with all vital equipment being properly serviced on a regular schedule and thoroughly inspected by men capable of recognizing incipient trouble. Proper control of maintenance, spare parts, and maintenance materials and equipment is important. Good equipment accessibility and proper labeling of service lines will help assure attention by operators and maintenance crews and will prevent inadvertent misoperation. Close cooperation between the maintenance and operating crews is essential. "The authorization of maintenance work which would impair reliability ever so remotely should be reserved to the plant superintendent."[1]

A three-part maintenance system used at Hanford Atomic Products Operation has resulted in reductions of 11% in unscheduled work and 70% in overtime, improved maintenance-operating group relations, and in a reduced backlog. "Procedures were based on the premise that the individual craftsman could be developed to think and act in an analytical manner. He must not be just a pair of hands waiting for instructions."[2] A written procedure describes in detail the area and equipment for which a particular craftsman is responsible, functions which he must handle as routine, special functions to be performed under instructions from his foreman, and the method of reporting unusual occurrences. Over a period of time, the craftsman becomes an "expert" in his area; he is able to forestall many unscheduled shutdowns by corrective action; and he is actively aware of the hazards peculiar to the equipment within his responsibility.

The foreman and a planning and scheduling specialist prepare weekly and daily schedules of maintenance work to inform operating groups, radiation control groups, and craftsman of work to be performed. A preventive maintenance card file is kept on each piece of equipment, giving its description, maintenance procedure, schedule, and history. Maintenance cards are issued to the responsible craftsman for execution as a routine function.

In a nuclear plant, particularly a radiochemical plant, a choice of maintenance philosophy ranging from completely remote to direct maintenance must be made.[3] Some factors that influence this choice are feasibility of decontamination, economics of providing spare equipment, importance of downtime, and protection of personnel and equipment. These and other factors have been examined, and a comparative tabulation of direct maintenance plants and experiences with various types of maintenance has been made[3] to guide design decisions. The maintenance philosophy at various plants is summarized in Table IV-1.

An area that should not be overlooked is the maintenance or reclamation of expensive contaminated equipment. This usually requires special equipment and facilities for decontamination and waste disposal. A building complex at AERE, Harwell, has facilities for baling and compressing dry wastes, incinerating combustible material, concentrating liquid wastes, and packing materials in drums for burial or disposal at sea.[4] Where necessary, this work is carried out in sealed areas, entered only in air-supplied, protective plastic suits. Similar areas are provided with a variety of decontaminating equipment for reclamation and repair of salvable items.

There are other maintenance problems peculiar to nuclear plants that are not necessarily the result of the presence of radioactive materials;

Table IV-1 MAINTENANCE IN RADIOCHEMICAL PLANTS

Plant Location and Name	Year in Operation	Present Status	Process	Maintenance Philosophy	Production Rate
Oak Ridge National Laboratory					
Building 3503	1950	Standby	Interium 23	Contact	100 kg of Th per day
Building 3019	1951	Dismantled	Purex	Contact	50 kg of U per day
	1956	Standby	Thorex	Contact	200 kg of Th per day
	1957	Operating	Volatility	Contact	10 kg of U^{235} per batch
Building 3505 (Metal Recovery)	1952	Standby	Purex	Contact	500 kg of U per day
FPDL	1958	Operating	Fission-product recovery	Contact	Variable
Building 4507	1962	Operating	Purex, ion-exchange	Contact	10 kg of U per day
Dounreay					
DMTR	1957	Operating	TBP	Contact	>75 kg of U per year
DFR	1959	Operating	TBP	Contact	
Marcoule	1958	Operating	TBP	Contact	Classified
Cherbourg	Being constructed		TBP	Contact	Less than Marcoule
Eurochemic	Being constructed		Purex	Contact	350 kg of U per day
Italian					
Allis-Chalmers Corp. (AE)	In study phase		ThO_2-UO_2	Contact	1.5 kg per day
Vitro Corp. (AE), highly enriched	In study phase		Amine solvent	Contact	Unknown

Table IV-1 (Continued)

Plant Location and Name	Year in Operation	Present Status	Process	Maintenance Philosophy	Production Rate
Oak Ridge National Laboratory, HRT	1957	Standby	Solids separation from H_2SO_4	Direct and underwater	90 gal per hr
Norway, Jener	1961	Operating	TBP	Contact	3 to 10 tons per year
Chalk River					
"Trigly"	1949	Dismantled	Trigly-hexone-TTA	Contact	Unknown
Uranium recovery	1952	Dismantled	TBP	Contact	200 lb of U per day
Anion exchange	1955	Standby	Anion exchange	Contact	100 lb of U per day
TBP pilot plant	Unknown	Dismantled	TBP	Contact	25 lb of U per day
W. R. Grace and Company, Davison Chemical Division	In design		Chop-leach, Darex, Purex, Thorex	Contact and Remote	1 ton per day
Japan	In design		Purex	Contact	1 ton per day
India	Being constructed		Purex	Contact	1 ton per day
DuPont, DP-566	In study phase		Purex Purex Purex	Remote Contact Remote	10 tons per day 10 tons per day 1 ton per day
Oak Ridge National Laboratory					
Multipurpose	In study phase		Multiple	Remote	6 tons per day
Project Hope	In study phase		TBP	Contact	5.5 kg of U^{233} per day
Purex	In study phase		Purex	Contact	3 tons per day
AEC reference plant	In study phase		Multiple	Contact	1 ton per day
ICPP, Small Plant Design	In study phase		Mechanical head-end, Purex	Contact	67.6 kg per day

for example, the maintenance of insulation on containment structures which, because of the area and expense involved, require continuous preventive maintenance rather than periodic replacement.[5] To reduce personnel exposure, a photographic sampling technique and equipment have been developed for determination of the condition of the insulation. From this knowledge, an economic study can determine the need for replacement or repair.

Radioactive Maintenance Experiences at HRE-2

The Homogeneous Reactor Experiment No. 2 at the Oak Ridge National Laboratory provided an opportunity for examining maintenance functions planned during the reactor design, as well as some ingenious solutions to unforeseen problems. Papers not reviewed here describe the planning, development, and testing of various tools and devices for semidirect underwater maintenance and the successful employment of these techniques.[6,7]

The reactor cell was initially flooded with water during remote maintenance operations to provide bulk shielding for personnel. Later, to avoid flooding the cell a portable shielding device was developed[8,9] that provided personnel shielding for performing certain operations without water shielding. This device consisted of sliding steel shields fitted with viewing windows, lights, and plugs through which various tools were used.

Successful as these maintenance operations were, the appearance of two holes in the core of the HRE-2 brought an urgent need for a program of unanticipated maintenance. These operations, phases of which have been reported or summarized in several publications, consisted of[10-14] viewing, photographing, and measuring within the core and blanket regions; modifying the system by reversal of flow and removal of diffuser screens from the

core; patching the holes; and a variety of miscellaneous operations. It should be noted that all operations had to be carried out through either a 3 1/2-in. blanket vessel opening or a 2 1/8-in. core vessel opening from the top of the biological shield more than 17 ft above the core centerline. Many special tools and techniques were developed to perform these difficult tasks.

Viewing devices for visual and photographic observation included[15] optical and tilting mirror periscopes and folding-arm viewers, some of which contained integral light sources; a periscope-tong retrieving tool; an omniscope that provides a 180° field of view (with accessory sheaths to provide contamination protection, lighting, and angle viewing); a special small television camera for use in the high-radiation field, positioned with articulated manipulators[16] (success of simpler and less expensive viewing equipment made the use of this device unnecessary); and external light-source viewing device consisting of a 15X spotting scope, a right-angle mirror, and a zirconium oxide arc light with collimators; and a Questar telescope.

Tools for loosening diffuser screens from the core wall and cutting them for removal included[17,18] a milling machine powered by an air motor, sector hole saws, a powered reamer, and an underwater electric-arc-cutting manipulator. A modification of this electric-arc cutter was successfully employed to cut up the Zircaloy core tank for sampling after completion of HRE-2 runs.[19] The versatility and adaptability of the cutter should make it attractive for other nuclear maintenance applications.

Tools for replicating, preparing, and patching the holes included[20,21] an air-motor-driven, manipulator-mounted, rotary wire brush; a hole-impression device consisting of an electrically heated, tapered, thermoplastic

block with a manipulating device, and an air cylinder to position it in the hole; a specimen-retrieving hole saw; a tapered reamer; and patch-placement tools to position, install, and tighten the contoured patches that were held with toggle bolts. Miscellaneous tools were devised to[22,23] manipulate, suspend, and position loosened diffuser screens; locate, retrieve, and remove various corrosion specimens, screen sections, and other debris; obtain diffuser-screen and scale-deposit specimens; and to perform various other functions.

These tools and devices are described and illustrated in much greater detail in the references, and in many cases complete operating procedures are given. The size of some of these devices made it possible to simultaneously insert the torch manipulator with its argon supply hose and screen pickup hook, an auxiliary pickup tool, a light conduit for illumination, and the omniscope and sheath for viewing, all within the confines of the 2 1/8 in. flange opening.

Several points are particularly significant in the philosophy of the HRE-2 core maintenance. First, all tools, techniques, and procedures were thoroughly tested and demonstrated in a full scale mockup that simulated as closely as possible the actual conditions in the reactor. Materials were screened for compatibility with the reactor system in case any portion was irretrievably lost. No device was inserted in the reactor until it was shown that there was virtually no possibility that it could damage, hang up, or otherwise contribute to the difficulties in the core and blanket vessel.

Second, in addition to the intensive testing, two or more techniques were investigated, developed, and the tooling tested for nearly all

operations. The most promising method was tried first, with alternatives as standby.

Third, by careful personnel control, ventilation control, monitoring, and rigorous observation of proved procedures for withdrawal of highly contaminated objects from the reactor, the difficult series of operations was carried out without a single incident of personnel overexposure and very few problems of contamination spread.

MSRE Maintenance Development

Maintenance planning for the Molten Salt Reactor Experiment, which is now being constructed at the Oak Ridge National Laboratory, began more than four years ago. This homogeneous type of reactor will require maintenance of pumps, valves, heat exchangers, and other equipment which has been in contact with the circulating fuel. A completely remote maintenance philosophy was adopted in the original concept, which required that all component replacement work be done with special manipulators while viewing with television.

In one of the earliest tests, a pump was set up in a hot cell to evaluate a mechanical-arm manipulator as a maintenance tool, to determine the extent of special fixtures and tools needed, to establish maintenance criteria, and to determine the feasibility of closed-circuit television viewing.[24] The pump was specially modified to permit simultaneous disconnecting of all service lines and to render certain other functions more easily performed, and a procedure was developed for removal of the pump impeller shaft, bearings, and seals. An inexperienced operator was able to follow the procedure and to perform the task. The test demonstrated the worth of

modifications to facilitate manipulator maintenance and the need for a viewing and lighting system which provided, or could be substituted for, depth perception.

Primarily because of the expense of the completely remote maintenance system, the original MSRE concept was modified to include a semidirect maintenance system[25] similar to that employed at the HRE-2.[8,9] This gives the operator a choice of the system to be used, depending upon the magnitude and type of work to be performed, and provides the safety of a spare.

Removable modular shielding blocks with a metal sealing membrane sandwiched between will provide access for work in the reactor cell. After removing three upper and two lower shielding plugs, a portable work shield consisting of horizontal steel or lead slides, roller mounted on tracks and motor driven for remote opening and closing, will be installed. The slides will have vertical holes for windows, viewing devices, lights, and tools. There will be careful control of air movement. Operations will be directed from a maintenance control room designed for personnel protection.

Concurrent with the development of maintenance techniques has been a program for the development of suitable flanged pipe joints for a fused salt system. These joints must be compatible with the fuel, be capable of being parted and remade through shielding, and must not leak in excess of 1×10^{-7} cm^3/sec of helium before, during, or after thermal cycling.

Three types of flanges were tested initially.[26] The first consisted of a frozen-seal mechanical joint, or freeze flange. An oversized flange was used with a metal ring joint near the outer edge. A narrow gap between the flange faces within the seal ring filled with molten salt which froze because of thermal conduction. These flanges performed successfully, and

the ease of their use indicated that they were potentially suited to remote manipulation.

The second joint tested was an indented seal joint. The replacement of gaskets required upon reassembly was found to be quite difficult in most cases. A cast-seal joint was unsatisfactory because of difficulties in disassembly after testing and leakage upon reassembly in subsequent larger scale tests. A modified freeze-flange joint, with the flanges joined by split clamping rings pressed on hydraulically, was ultimately selected and developed for use in the MSRE.[27,28]

Small pipe disconnects for auxiliary lines were also required that were to perform properly at 500 psi and 1200°F with a leak rate of less than 1×10^{-6} standard cm^3/sec of helium and to withstand radiation up to 1×10^{10} rads. This high radiation field eliminated from consideration all commercially available disconnects containing either plastic or elastomer seals. It was desirable to make provision for a leak-check test connection in the disconnects. Similar work on the Experimental Gas-Cooled Reactor Project and a Canadian study on mechanical seals and joints was reviewed. Commercially available seals employing bellows and metallic O-ring gaskets presented an alignment problem requiring a "two-arm" manipulator or special gasket retention. Metallic insert gaskets required replacement upon disconnecting the joint, and cold welding during prolonged high-temperature runs could occur and damage the flange facings.

Designs for two types of flanged joints were developed.[29] One is a tongue-and-groove type of joint with a metallic insert gasket retained in the groove of the flange on the component to be replaced. Compression for this joint is provided by a pair of externally retained and guided clamping-

ring segments. This joint provides a geometry that permits leak testing of the space between an inner and outer sealing surface. The second disconnect was an angle type in which a spherical male seat fit a conical female seating surface. This type of joint incorporates a spring-loaded ball check valve in the disconnect but does not provide the double sealing surface required for a leak check connection. Both these disconnect types were successfully tested.[30]

The change in the original maintenance philosophy to include semidirect operations made it no longer necessary to depend entirely on a one-handed manipulator. It was therefore possible to use less expensive, modified ring-joint flanges that incorporated an integral ring; and the emphasis of the developmental program was changed to concentrate on manifolding in order to reduce the number of individual disconnects to be made or broken in the reactor cell.

A manifold was developed that permitted six spring-loaded individual connections to be made or broken simultaneously using a single bolt at the centerline to load the assembly.[31] The individual connections have conical female seats that receive conical male inserts. The sealing principal is that of elastically deforming the male inserts as they are loaded into the more massive female inserts. The blocks of the manifold bear against each other before plastic deformation can occur. Thermal-cycling tests have demonstrated that with proper selection of materials, these joints will provide the low leakage rates required in reactor service. It is possible to relap the permanently mounted female parts in the cell if necessary and replace the male parts with the system components. The outstanding disadvantage of conical seal units for reactor application is that they are

not readily adaptable to leak detection. These connectors will be used on air- and leak-detection monitor lines of the reactor.[26]

An additional manifold type of disconnect was developed that consisted of a pair of flanges with a ring-joint seal at the periphery and individual Flexitallic gaskets for each of four 1/2-in. lines.[32,33] This disconnect is most useful where small amounts of interline leakage can be tolerated, but leakage to the outside is unacceptable.

Other newly developed disconnects for special applications in the reactor are a joint that permits initial installation with all-welded construction, with provision for future field cutting and reassembly as a mechanical ring joint, and a tapered braze joint.[34,35]

Maintenance Planning and Experiences at Other Installations

Predicting activity levels that will be encountered in a particular maintenance operation in order that proper shielding for personnel protection may be provided is a difficult problem. Where the activity levels expected and the magnitude of the job are sufficient to warrant it, an advance study of the conditions that will predominate can be valuable.

A study for predicting the dose rates from the SRE calandria core after five years of operation at 20 Mw gives the method of calculation.[36] The major contributors of activity are manganese, chromium, iron, and cobalt. The sum of the calculated dose rates was 2.6×10^5 equivalent gamma curies. The direct dose rate 16 ft from the calandria core is estimated at 1.8×10^3 r/hr initially, but it is reduced by a factor of 2.5 at 10 hr after shutdown. The rate of decay slows thereafter because of the Co^{60} contribution. The scattered dose rate at a distance of 10 ft

from the edge of the empty core tank with the calandria at the bottom is estimated at 11 r/hr. This would be reduced to 1 mr/hr with kerosene 200 cm above the top of the calandria. The design of a mobile shielded container or shadow shield to follow the crane during removal to a storage facility is recommended.

More often than not, in planning for the maintenance of a radioactive system or component, several alternatives must be evaluated before a definite procedure can be established. For example, in removing an SRE main primary pump, about 700 lb of sodium is expected to cling to it. A study was therefore performed to determine the best method of sodium removal from the pump and to recommend facilities and equipment necessary for repairs and maintenance on the pump.[37] The methods of sodium removal investigated were steam cleaning, alcohol cleaning, and liquid ammonia dissolution. The final step in any process is a water soak.

A variation of steam cleaning using a moist inert gas was determined to be the most promising, and a cleaning procedure for the pump was developed. This consisted of draining the sodium, thawing the pump freeze seal, heating and pressurizing the pump case with helium to return as much sodium as possible to the system; pulling the pump into a shielded cask, positioning it for draining the sodium, and melting the sodium; admitting a mixture of steam and dry nitrogen until conclusion of the reaction with the remaining sodium; soaking in water for 8 hr and draining and drying. The pump is then transferred to a manipulator cell for further maintenance work.

Maintenance planning programs have been carried out for other systems, such as the Liquid Metal Fuel Reactor.[38] Development and testing of viewing

and maintenance equipment were carried out in a simulated reactor plant canyon. A floor grid pattern and wall markings were used to orient operators viewing with television. Tests were made on equipment, and background painting and lighting were used to improve picture quality. Two closed-circuit television systems were used to provide viewing in more than one plane. The best viewing required lighting in excess of 150-ft candles and painting with highly reflective nonglare paints.

A mobile vehicle was developed that consisted of a modified fork-lift truck with a manipulator arm mounted in place of lifting forks. Truck and manipulator motions were remotely controlled from one operating console. Lifting booms were provided to assist the mechanical arm. The entire vehicle could pass through an 8-ft door. A remotely controlled electric tractor was also modified to study material-handling problems.

Radio, sonic, and closed-loop induction control systems were investigated to eliminate cables from vehicles to the control room. Radio and sonic control systems were found to have severe limitations. The induction system afforded freedom from outside interference, low cost, no licensing problem, the proper number of control functions, and adaptability to any type of vehicle. The bulk of the equipment can be located in the control room, and that which is located at the vehicle is small in size and power consumption.

A series of tasks were performed to determine the capabilities and limitations of the manipulator vehicle. Aural monitoring from a transmitter or microphones was found to be essential. Certain functional shortcomings were observed; such as, the lack of two-handed operational ability, limited mechanical arm capacity, restrictions which the vehicle height

would impose on a reactor plant layout, and insufficient linear motion and forward reach of the mechanical arm. These limitations prompted the conceptual design of a more versatile vehicle with reduced height, two arms with increased capacity, increased manipulator and hoist reach, hydraulic power, induction command control, and dual-channel transmitted television viewing.

Experience at the Vallecitos Boiling-Water Reactor has also demonstrated the effectiveness of proper planning in permitting tedious and difficult maintenance functions or modifications to be safely carried out.[39] The VBWR was shut down in late 1959 for an extensive modification to permit carrying out a high-power-density fuel-development program. Modification work consisted of the removal of the old core structure and recirculation piping, the installation of new piping, valves, pumps, instruments, and other equipment, and the installation of the new core structure in the reactor vessel. Hot components were removed from the reactor vessel to a storage pool in the reactor building, using only distance for shielding. These were subsequently cut up and transferred to another storage area in disposal drums. After removal of hot components and piping, local areas were decontaminated and cleaned where new attachments would be made. Contractor personnel installed the new components with little difficulty. "The experience gained in this project demonstrates that modification work in a nuclear power plant need not be appreciably more difficult than in a fossil-fired steam plant, provided some procedures and techniques are planned and developed in advance."[39]

Two bibliographies have been compiled that present further information on maintenance and maintenance equipment.[40-41] (D. M. Shepherd)

REACTOR COOLANT CLEANUP

From the standpoint of reactor safety, it is desirable to maintain the coolant contamination at a low level to reduce the radioactivity of reactor components that must be directly maintained, to reduce coolant radioactivity so that coolant release to the atmosphere does not create a hazard, to reduce the effects of nuclear poisons, to maintain constant thermal properties of the coolant, and to prevent reactor component deterioration by particulate erosion and chemical attack. The following reviews cover the subject of reactor coolant cleanup for the two major types of coolant: gas and water.

Gas-Cooled Reactors

Gases have been used as primary coolants for nuclear reactors from the beginning of nuclear reactor technology; for example, the early air-cooled research reactors. No attempt is made here to consider the factors influencing the choice of a specific gas coolant for a reactor application, but a brief survey of coolant types is of interest. The relatively low-temperature research reactors or isotope-production reactors utilize once-through air as the coolant; the higher temperature plutonium-production reactors and the Calder Hall-type power reactors use CO_2 as the primary coolant;[42,43] and the more-advanced, high-temperature, gas-cooled power reactors will utilize helium as the primary coolant.[44-54] There is also speculation on the use of hydrogen rather than helium as the primary coolant for advanced power reactors.[55,56]

Coolant contamination may be classified into three groups: (1) particulate matter, (2) radioactive gases, and (3) nonradioactive gases.

Particulate contamination results from corrosion or erosion of various reactor components and fission products released from ruptured or unclad fuel elements. Radioactive gaseous contamination results from gaseous fission-product release from ruptured or unclad fuel elements. Nonradioactive gaseous contamination results from (1) outgassing of reactor components, such as reactor core graphite; (2) in-leakage, such as steam from steam generators; and (3) chemical reaction of the coolant or coolant impurities with reactor components. Several previous articles in Nuclear Safety[57-60] that were concerned with the general problem of the removal of contaminants from gases give additional specific information on the problems of gaseous coolant decontamination.

Operating Philosophy. Before considering methods of coolant purification, it is necessary to consider the part of current reactor operating philosophy that affects the design and operation of the purification system. The following are some of the major points:

1. The system must be capable of continuous operation.
2. Loss of sensible heat from the coolant must be at a low level.
3. The system must have mechanical simplicity.
4. The pressure loss must be small.

As a result of requirement (1) any batch operation must be duplicated so that continuous operation will be maintained, and requirement (2) dictates that any low-temperature processing step should be on a small coolant side stream rather than on the full coolant flow. Requirement (3) tends to favor systems with fixed beds of solids rather than circulating fluids, and requirement (4) limits use of high-pressure-drop techniques, such as thermal-diffusion-separation processes.

Particulate Matter Removal. Particulate contamination can be of two types: (1) material that is solid at both high and low temperatures and (2) material that is solid only at low temperatures. In-line, full-flow, absolute filters fabricated from a ceramic material are frequently used as high-temperature filters in primary coolant channels.[42,61,62] Multiple units are used to ensure continuous operation.

Removal of particles that are solid only at low temperatures is best done in a small side stream of the coolant system in conjunction with other low-temperature operations. Filtration appears to be the most straightforward method for removal.

Other methods for removing particulate matter that have been used or suggested are cyclone separation[42] and large-particle seeding followed by filtration.[63]

Removal of Radioactive Gaseous Contamination. The radioactive gaseous contaminants of most interest are iodine, krypton, and xenon. Several methods for removing these contaminants from gas streams have been demonstrated.

Iodine can be removed by chemical reaction with aqueous solutions[64] or silver metal[65] and by sorption on a solid sorbant, such as activated charcoal or Linde molecular sieves.[66-70] Since it is desirable not to use aqueous systems that give aqueous wastes and high water content in the gas, use of a silver reactor or a solid sorbant appears to be the best approach. Operating methods will further dictate which of these methods to use. A detailed review of recent developments in the removal of radioiodine from gases appears in the following review (pp. 218–226).

Various methods have been used to maintain the nobel gases, krypton and xenon, at low levels in gaseous coolants. They have been vented to the atmosphere and diluted by coolant makeup,[71] removed by solvent extraction techniques,[72] removed by a solid sorbant,[73,74] and removed by cold trapping.[75] The most satisfactory way to remove krypton and xenon from a flowing gas stream has been demonstrated to be by sorption on fixed beds of solid sorbants. It has been shown that various types of charcoal, silica gel, activated alumina, and several Linde molecular sieves can be used for krypton and xenon removal, although activated charcoal appears to be the most effective sorbant. The sorption isotherms of all these sorbants follow the usual temperature dependence.

A fixed-bed sorber may be used in two ways. A sufficient amount of sorbant may be used so that the krypton and xenon are delayed in the bed relative to the flowing gas stream, and time is thus allowed for radioactive decay of the fission-product gases to other species; or a sorbant bed of sufficient size may be used to sorb and hold up a predetermined amount of fission-product gases. The delay traps can be used on a continuous basis while the holdup traps must be used as multiple units with alternate sorption and desorption of the traps. In general, the delay traps are larger but simpler to operate. Use of very low temperatures (liquid nitrogen) may be necessary for the holdup traps.

Other methods suggested for removal of krypton and xenon are sorption on circulating solids that are removed by filtration,[76] use of a diffusion-separation cell,[48] and electrostatic ion separation.[77]

Removal of Nonradioactive Gaseous Contamination. If the reactor coolant is reasonably inexpensive and abundant (i.e., air or CO_2) and

if radioactive contamination is very low (as in the case of a plant that uses clad fuel), probably the best method of maintaining low contamination levels in the coolant is dilution with fresh coolant while exhausting a fraction of the contaminated coolant. This type of treatment is common with air- or CO_2-cooled reactors with clad fuel.

For reactors that utilize expensive, less-abundant coolants, such as helium, or where gross radioactive contamination may be present in the coolant because of the use of unclad fuel, removal of the nonradioactive gaseous contaminants must be considered. At present, helium is the only coolant in this category, therefore, the rest of the discussion on this topic is directed toward consideration of the removal of nonradioactive gaseous contamination from helium.

The major nonradioactive gaseous contaminants expected are water, hydrogen, oxides of carbon, and traces of hydrocarbons.[61,78] If there is exposed graphite in the reactor core, it is very important to maintain low levels of CO_2 and H_2O contamination to reduce the core loss of graphite from the reactions[79]

$$C + CO_2 \rightarrow 2CO$$

and

$$C + H_2O \rightarrow H_2 + CO \quad .$$

Contamination levels that are acceptable range from 1.8 wt % CO_2 for the relatively low-temperature (1050°F) Experimental Gas Cooled Reactor (EGCR)[78] to <100 ppm CO or H_2 for the higher temperature Pebble Bed Reactor (PBR) and the High-Temperature Gas-Cooled Reactor (HTGCR).[61,80]

A workable purification scheme appears to be a two-step process in which all of the oxidizable gases are oxidized to CO_2 and H_2O and then the H_2O and CO_2 are removed by a sorption or cold-trapping process. It has also been suggested that all contaminants be removed by low-temperature sorption on charcoal.[81]

It has been proposed that H_2, CO, and hydrocarbons be oxidized either in a fixed-bed catalyst or in a fixed bed of an inorganic oxide, such as CuO. Both processes have been shown to be usuable;[82-85] however, catalytic oxidation appears to be more suitable where high-concentrations (>1000 ppm) are expected and the addition of oxygen to the gas stream is not critical, whereas fixed-bed CuO oxidation appears best for oxidation of contaminants at low levels (<100 ppm), since the oxygen-addition problem does not exist.

The H_2O and CO_2 may be removed from a flowing gas stream either separately or together. The H_2O can be removed by cold-trapping or by sorption on a number of solid desiccants, such as silica gel or Linde molecular sieves. The CO_2 may also be removed by cold-trapping, reaction with an aqueous solution, or sorption on solid sorbants.

Simultaneous removal of H_2O and CO_2 may be achieved by cosorption on a solid sorbant or by cold-trapping. Cosorption by Type 5-A Linde molecular sieves has been shown to be feasible, and an experimental program for investigating this process is in progress.[86]

Water-Cooled Reactors

Two previous reviews[87,88] discussed the buildup of activity in the primary system of water-cooled reactors. In the operation of water-cooled

reactors, radioactive nuclides are released to the primary coolant by several different mechanisms:[89] (1) activation of corrosion products and corrosion of activated atoms in the fuel cladding, (2) activation of impurities in the water and on the fuel cladding, (3) recoil of atoms for the fuel cladding, (4) leakage through cladding defects, and (5) activation of oxygen in the water. Provisions are made for purification of the water to minimize crud deposition on fuel tubes, prevent excessive buildup of radioactivity in the system, remove corrosion-producing substances, and reduce radiolytic decomposition of the water by removing ionic impurities.[90]

Pressurized-Water Reactors. In some areas, chemically treated raw water may be used as the coolant in once-through systems.[91,92] Such systems are desirable economically but limited because of site availability. Most pressurized-water reactors utilize primary and secondary systems with heat exchangers and cooling towers. The primary cooling loop is usually a closed system, and the water is recirculated through the reactor and the heat exchangers. The buildup of activity in such a closed loop[93] can be kept to a minimum by application of a side stream or bypass purification system. All pressurized-water reactors now in operation or being designed employ a bypass purification system to maintain high purity of the water.[94] The most commonly used method for removing impurities from the water is demineralization or deionization. Deionization[95] consists of the removal of cationic or anionic impurities, and is usually accomplished in a two-stage ion-exchange process. Although ion exchange applies only to ions (colloidal and true solutions) and nonelectrolytes cannot be removed,[96] a demineralizer serves as a

very efficient filter,[94] and, in reactor systems, the resin functions largely as a conventional filter.[90]

Other purification means, including evaporation, hydrocloning, and centrifugation, have been examined but discarded on the basis of high cost.[88] While some reactors, such as the Oak Ridge Research Reactor,[91] use separate fixed-bed columns of cation- and anion-exchange resins in series, most existing reactors employ a single mixed-bed demineralizer. The first pressurized-water reactors used strongly acidic cations resin in the hydrogen form and strongly basic anion resin in the hydroxyl form, the (H^+, OH^-) cycle.[97,98] Some new reactors, such as the N.S. Savannah reactor,[99] utilize this cycle because it is the most effective for removal of mixed fission products from relatively pure water.[90]

The use of the (H^+, OH^-) cycle will also avoid the formation of tritium[100] from the $Li^6(n,\alpha)H^3$ reaction encountered when a (Li^+, OH^-) cycle is employed. The advocates of base-form ion exchange,[98,101] that is, (Li^+, OH^-), (K^+, OH^-), or (NH_4^+, OH^-) cycles, claim that control of the coolant pH at 9.5 to 10.5 affords beneficial effects in exerting more effective control over the insoluble corrosion products than is possible by simple demineralization and filtration of a portion of the coolant. Thus, the relative inability to control the insoluble material in the coolant system becomes of less concern because the concentration of particulate corrosion products in the coolant is markedly reduced by the use of a strong base.

Although equipment variations, in addition to those mentioned above, exist in the different bypass purification systems, they are basically similar. Some systems, like that at Shippingport,[102] employ a high-

pressure bypass system, while others, such as the SM-1(APPR),[94] N.S. Savannah,[103] and Yankee,[90] employ low-pressure bypass purification. Coolant additives that may affect the operation of the purification system also vary. For example, some reactors utilize a soluble boric-acid neutron poison that is removed by the demineralizers.[104] This necessitates premature replacement of these units or requires a special ion-exchange boron-depoisoning system.[90] Since the presence of oxygen in the coolant results in increased corrosion, hydrazine[100] or other reducing additives are injected into many systems on startup and an excess of hydrogen[100,101,105] is maintained in the coolant during operation to control the oxygen concentration. Oxygen can also be controlled by a deoxygenating ion-exchange resin.[106]

Boiling-Water Reactors. The operating experience obtained with the EBWR purification system [107-109] offers possibly the best example of coolant cleanup technology in a boiling-water reactor system. The EBWR system is maintained at a neutral pH. Makeup water is passed through a mixed-bed ion exchanger and then into a deaerating condenser to control the dissolved oxygen content. The purification or cleanup loop for the reactor water during operation is composed of two side-stream, mixed-bed, ion-exchange demineralizers; one is held in standby while the other is in operation. Water is taken from the bottom of the reactor, cooled, filtered, passed through the demineralizer, filtered again, and pumped back to the reactor. The entire operation is performed at reactor pressure. The water quality is maintained at better than 0.5 micromho. Two resin columns have been changed since operation began late in 1956. Each change was after experiments with boric-acid control.

The radiation levels in the EBWR plant during the period it has been in operation are lower than the most optimistic predictions. The general background activity in the plant is less than 5 mr/hr. None of the operators has recorded measurable exposures to radiation during plant operation or in routine maintenance. Similar experience in the VBWR indicates that turbine personnel receive radiation doses of less than 30 mr per week in the normal performance of their duties. During operation at 20 Mw, radiation levels in the turbine building of the VBWR are 6 mr/hr or less, except in the immediate vicinity of the condensers and the high-pressure end of the turbine. At these points, the levels rise as high as 15 mr/hr. Contact levels as high as 100 mr/hr are measured on the air ejector. High water purity resulting from the use of deionizers contributes to the low residual activity levels.[107] A review of activity levels throughout the various operating reactors[108] has shown a maximum radiation level in the vicinity of the ion-exchange columns of 10 r/hr through a 1/2-in.-thick steel vessel wall in the EBWR, but the level decreases rapidly upon shutdown.

Coolant cleanup in a boiling-water reactor system is thus similar to that employed in pressurized-water reactor systems. Some minor equipment variations exist in the various purification systems, as in the case of the pressurized-water system. The VBWR system is similar to the EBWR system but uses a sodium-zeolite water softener in place of a mixed-bed demineralizer for makeup water and employs a condensate-demineralizer system in addition to the normal cleanup system. The ALPR utilizes a separate cation-exchange precolumn ahead of the mixed-bed demineralizer in the purification loop. The Dresden Nuclear Power Station, the largest

all-nuclear power plant in the United States, has three water-treatment systems to supply and maintain high-purity reactor-system water, a makeup water system, a reactor cleanup system, and a condensate-demineralizer system. All three systems employ mixed-bed, ion-exchange demineralizers and are operated similar to the other boiling-water reactor systems described above.

Heavy-Water-Cooled Reactors. By deuterizing ion-exchange resins,[110] it is possible to install demineralizers for purification maintenance of heavy-water-moderated and -cooled reactors.[111-113] As with light-water-cooled reactors, the maintenance of heavy water of high purity in the primary cooling loop with demineralizers has the following advantages:[114] removal of induced radioactive products, removal of low dissolved solids to prevent scale buildup on heat transfer surfaces, and maintenance of pH at or near neutral conditions to reduce corrosion. (C. D. Scott, R. R. Holcomb)

REMOVAL OF RADIOIODINE FROM GASES

The removal of radioiodine from gases has been the subject of prior reviews in Nuclear Safety[115] that covered the removal of radioiodine from gases by activated charcoal and by silver-plated metal mesh primarily from air at room temperature, the removal of radioiodine from air-steam mixtures, and the efficiency of a variety of iodine adsorbers. The control of radioiodine continues to be a problem of major importance, however, in the design and siting of nuclear reactors. Because of its volatility, radioiodine can be released from nuclear fuel under certain conditions and because of its biological characteristics, radioiodine has been assigned a very low maximum permissible concentration.

As the technology for removing radioiodine from gases in reactors matures, there is a trend toward testing the effects of special conditions on the efficiency of iodine adsorbers. The recent literature includes investigation of the effects of iodine concentration, gas velocity, temperature, and presence of impurities on the efficiency of iodine removal from air, helium, and carbon dioxide by activated charcoal, silver-plated copper mesh, and many other materials.

Removal from Air at Room Temperature

Bancroft, Watson, and Hewitt[116] have reported an extensive series of tests on several materials in air at room temperature at various iodine concentrations and gas velocities. The effect of drenching with water was also investigated and pressure-drop measurements were made. Charcoal was the most efficient of the materials tested. A 2-in.-thick bed of 8-35 mesh activated charcoal yielded efficiencies greater than 99.9% at an air

velocity of 60 fpm. One test at 240 fpm gave identical results. Two values of iodine concentration were used, 10^{-7} and 3.6 mg/m^3, with no difference in efficiency being observed. Drenching the charcoal with water reduced the efficiency to 99.0%.

Silvered copper mesh and copper mesh gave lower iodine-collecting efficiencies than charcoal but were investigated because of their lower resistance to air flow. Copper mesh performed erratically, showing efficiencies from 15 to 99.8% and averaging 50% for thirty-four 6-hr tests with 4- to 4.5-in.-thick beds, air velocities of 60 and 300 fpm, and iodine concentrations of 10^{-7} to 134 mg/m^3. Efforts to identify the source of erratic behavior of the copper collectors met with little success. Copper surface treatment, packing density, iodine concentration, and face velocity of the air were considered as variables in this investigation. Etched copper gave the best results, but it did not give consistent ones. It was concluded that copper is not a suitable collector for iodine because of its erratic behavior.

Silvered copper mesh gave efficiencies generally higher than 99.9% for room-temperature air flowing at velocities as high as 300 fpm through 4- to 5-in.-deep beds with a density of 18 to 60 lb/ft^3. The lowest efficiency measured was 96% and the average was 98.7%. There was no consistent effect of iodine concentration on efficiency over the range 10^{-7} to 13 mg/m^3. No effect of packing density on efficiency was noted. There was no significant effect of air velocity over the range 60 to 480 fpm. No definite effect of iodine loading on collector efficiency was noticed up to an iodine loading of 0.1% of the weight of the silverd-copper-mesh collector. One collector was exposed to 3×10^{-6} ft^3 from the laboratory over a one-month period, after which it showed an efficiency of 97%, which

was not greatly different from the efficiency observed before exposure. In another test, 400 g of H_2S was introduced at a constant rate during a 1-hr period. The iodine removal efficiency was temporarily reduced to 90%, but it rose to 99.2% the following day. The efficiency of silvered copper mesh was reduced from 96 to 94% by water spraying. It was concluded that silvered copper mesh exhibited an efficiency high enough to justify its use where pressure drop is an important consideration.

Charcoal-loaded filter paper exhibited an efficiency that changed from 98.8% initially to 70% after 2 1/2 hr. In another test a layer of fine charcoal dust sandwiched between layers of Fiberglas net gave efficiencies of 99.7 to 99.9% at iodine concentrations of 10^{-7} and 14 mg/m^3. Coke gave an efficiency of 99.5% initially at 10^{-7} mg/m^3, but at 0.8 mg/m^3 iodine penetrated the adsorber and continued to be released by the coke as air flow continued.

Billard, Chevalier, and Prädel[117] have investigated the efficiency of activated coconut charcoal for the removal of radioiodine from air at room temperature as a function of iodine concentration, air velocity, and thickness of charcoal bed. They found the efficiency to be independent of iodine concentration over the range 2×10^{-6} to 2×10^{-3} mg/m^3. Efficiencies as high as 99.999% were observed for thicknesses of 1 in. of charcoal at velocities of 2 1/2 to 12 fpm. The logarithm of the fraction of iodine penetrating the adsorber decreased linearly with the thickness of the adsorber, as expected, up to 1/2 in. At greater depths, a decrease in incremental efficiency was taken as evidence for the existence of a form of iodine presumed to be adsorbed on particles in suspension in air. This effect had been reported previously.[115] The fraction of iodine

penetrating the adsorber was found to be proportional to the velocity of air over the range 2 to 200 fpm when the complex composition of the iodine was ignored. When corrections were made for the influence of the iodine presumed to be adsorbed on particles, it was found that the fraction of iodine vapor penetrating the adsorber was independent of velocity at about 2 fpm, but at velocities greater than 10 fpm the log of the penetration increased linearly with velocity up to 200 fpm.

Rosinski[118] has performed tests on various adsorbers with nonradioactive iodine at concentrations much greater than would be expected in a nuclear reactor gas stream. Partial pressures of 0.2 to 45.5 mm Hg (1.5×10^3 to 3.4×10^5 mg/m^3) were used. An adsorber unit consisting of silver-plated copper mesh was tested and the iodine was removed from the silvered surfaces by using a solution of ammonia and sodium thiosulfate. Initial efficiencies close to 100% were observed, but after repeated washing with the ammonia—sodium thiosulfate solution the efficiency dropped to 20%. Examination showed that the silver and copper had dissolved in the solutions used for cleaning. Similar tests on a charcoal adsorber consisting of a 1 1/8-in. thickness of 12/30 mesh bituminous charcoal yielded an efficiency greater than 99.8%. Removal of the large quantity of iodine adsorbed was accomplished by using a carbon tetrachloride solution and by passing hot air through the charcoal, but the removal was difficult. It was recommended that this method not be used for nondestructive tests of adsorber units intended for service in a reactor offgas system.

Tests were conducted to evaluate the possibility of using Freon to simulate iodine in tests on adsorbers. A correlation was found between the capacity of different grades of charcoal for adsorbing iodine and Freon.

It was recommended that additional investigation of this possibility be carried out making use of the Freon penetration time to characterize the quality of a charcoal adsorber.

Iodine-adsorption tests were run using sodium thiosulfate compound, barium sulfate, and charcoal impregnated with sodium thiosulfate. Moderate efficiencies were observed, but these materials were considered to be of only casual interest because of their undesirable physical properties. Charcoal impregnated with sodium thiosulfate exhibited a lower capacity for iodine adsorption than unimpregnated charcoal in static adsorption tests.

Kitani and Ezure[119] have investigated the adsorption of radioiodine from air by molecular sieve 5A. Air-carrying radioiodine at a partial pressure of 0.3 mm Hg (2.2×10^3 mg/m^3) was passed through a 6-in.-deep column of Linde molecular sieve 5A at a linear velocity of 0.5 fpm. After 25 min the iodine had penetrated 2 in. with the adsorber at 160°C and only 1 in. with the adsorber at room temperature. When air containing water at 50% relative humidity (23°C) was used, the radioiodine penetrated the adsorber in less than 10 min. Static adsorption tests were also conducted with similar results. It was concluded that molecular sieve 5A could be used for removing radioiodine from air, but only under suitably dry conditions.

Removal from Steam-Air Mixtures

In accidents in which radioiodine is released from nuclear reactors, there may be simultaneous release of steam. Thus it is necessary to determine the efficiency of adsorbers for removing radioiodine from mixtures

of steam and air at temperatures close to 100°C. Adams and Browning[120] have measured the efficiency of the charcoal adsorbers used in the auxiliary ventilation system of the N.S. Savannah. At 98 to 100°C, 4.5 to 5 fpm gas velocity, 80 to 90% steam saturation, and 2×10^{-2} to 7×10^{-2} mg/m^3 iodine concentration for 12- and 24-hr periods, the iodine-removal efficiency was 99.85 ± 0.1% for the charcoal adsorbers, which consisted of 1 1/8-in. thicknesses of bituminous-base activated charcoal. In-place tests were conducted on board the ship at room temperature using elemental iodine labeled with I^{131} tracer. The efficiency was found to be greater than 99.99%, indicating that the charcoal adsorber, as installed, was capable of the iodine-removal efficiency observed in laboratory tests. A similar in-place test conducted on the main ventilation system, which contains a silvered-copper-mesh adsorber, yielded an iodine-removal efficiency of 95%.

Watson, Bancroft, and Hoelke[121] have attacked the problem of removing iodine from mixtures of steam and air by spraying cold water into the steam mixture. The distribution ratio of iodine between air and water was approximately 10^{-4} immediately after dousing. Equilibrium with a volatile form of iodine sorbable on charcoal was achieved within 5 min. With this technique, it was practical to reduce the concentration of iodine in the gas by a factor of 1000 by successive injections of cold water.

Removal from CO_2 at High Temperatures

Maintaining safe conditions, as well as facilitating maintenance in a gas-cooled reactor, requires minimization of the amount of radioactive contamination in the gas stream. Board and Davies[122] have investigated methods of removal of iodine from CO_2 at temperatures up to 200°C. In these experiments, various adsorbers were tested in 12-in.-deep beds at

gas velocities of 50 to 250 fpm and iodine concentrations of 10 to 100 mg/m^3 for a duration of 25 min. Activated charcoal was shown to have an efficiency at 50 fpm of 99.99%, which was not impaired by increasing the temperature from 18 to 200°C or by the presence of water vapor in the gas. At 250 fpm the efficiency appeared to decrease to 99.95%. Copper turnings and activated alumina had lower adsorption efficiencies, the efficiency of both materials being 99.8% at room temperature. Activated alumina was tested at 200°C, where its efficiency was 99.5%. The distribution of activity in this latter experiment suggested that significant transport of the iodine had occurred after initial adsorption at 200°C. It was concluded that activated charcoal is superior to either copper turnings or activated alumina at 200°C in CO_2.

Smith and Crawley[123] have also investigated the effectiveness of various adsorbers in CO_2 at high temperatures at velocities of 150 to 500 fpm and iodine concentrations of 10 to 100 mg/m^3. Tests run on a 4-in.-thick bed of activated charcoal at 170 fpm at 200 and 400°C for 1 hr gave efficiencies of 99.99%. Copper mesh 3/4 in. deep showed an efficiency of 99% at 95°C, 99.6% at 400°C, and 97.7% at 450°C. Sintered bronze disks 0.04 in. thick showed efficiencies of 30 to 60%. Copper mesh showed an efficiency of 50 to 99% over the temperature range 30 to 450°C. The efficiency of copper mesh was significantly reduced by water vapor or air mixed with the carbon dioxide. Silvered copper 3 in. deep showed efficiencies as high as 99.7%, with an efficiency of at least 98% over the range 90 to 400°C. At room temperature the efficiency was only 92%. Water vapor and air at 300°C reduced the efficiency to 80 and 70%, respectively. The efficiency dropped to 95% at a face velocity of 500 fpm

at temperatures of 30 and 300°C. It was concluded that silvered copper mesh, while not as efficient as activated charcoal, was superior to the other adsorbents studied.

Andrews, Emerson, and Hudswell[124] have investigated the adsorption of iodine by a number of solids in an atmosphere of carbon dioxide. Radioiodine was released from an irradiated uranium wire by heating in a CO_2 stream which was then passed at 1 fpm through the adsorbers to be tested for periods that appeared to be in the range of 1 hr. Activated charcoal, magnesium carbonate, and coke, the most efficient materials tested, showed efficiencies greater than 99% over the range 25 to 500°C. Silver-plated copper and unplated copper showed efficiencies of 98.5 to 97%, respectively, up to 400°C.

Removal from Helium at High Temperatures

Watkins, Busch, and Zumwalt[125] have investigated the effectiveness of activated charcoal with and without metallic coatings for removing radioiodine from helium in the temperature range 450 to 620°C. Based on tests at a helium velocity of 0.7 fpm and an iodine concentration of approximately 28 mg/m^3, the holdup time predicted for an 11-in.-deep adsorber was 5 to 16 days for bituminous-base charcoal and 50 to 150 days for coconut-based charcoal at temperatures of 450 and 540°C. Charcoal coated with metallic silver gave results equivalent to a holdup of greater than 200 days in an 11-in.-deep adsorber at 450°C, 60 to 70 days holdup at 540°C, and 8 days at 620°C.

Adams and Browning[126] performed tests under similar conditions. Efficiencies ranging from 16 to 97.6% were obtained using a bed of charcoal 0.25 in. thick through which helium containing 10 mg of iodine per cubic

meter of helium was passed at 13 to 110 fpm for 150 to 200 hr at 320°C. Under the same conditions, a special charcoal containing salts of silver, copper, and chromium (Whetlerite ASC) exhibited an efficiency exceeding 99.99%. This charcoal, designed for use in gas masks, exhibits this high efficiency up to 550°C when used in a 4-in. depth.

Form of Iodine

The behavior of radioiodine depends on whether it exists as a true vapor, as a compound, or in a form adsorbed on particulate materials, as has been noted by a number of workers in the field (refs. 115–117 and 121–123). Browning and Ackley[127] have developed a method for characterizing the form of radioactive materials in gases. The diffusion-coefficient spectrum of the radioactive material is determined by measuring the distribution of radioactivity along the wall of a channel that carries the gas under laminar flow conditions. The method is applicable for particulate material ranging from 10 Å in diameter up to 1 micron in diameter and also for radioiodine vapor. (W. E. Browning, Jr.)

References

1. J. M. Totten, How Reliable is Your Plant?, Power Engineering, 64(11): 68–69 (November 1960).

2. M. G. Petersen, Maintenance Problems Increase When Working Around Radioactive Equipment, Mill & Factory, 67(2): 108–111 (August 1960).

3. J. C. Bresee and J. T. Long, Design Philosophy for Direct-Maintenance Radiochemical Processing Plants, 1962 Nuclear Congress, Preprint No. 80, Engineers Joint Council, New York, 1962.

4. Equipment Reclamation at AERE, Nuclear Engineering, 7(69): 73–74 (February 1962).

5. H. H. Norden, Plan for Maintenance of Insulation on Containment Structures, Power Engineering, 65(2): 37–38 (February 1961), and 65(4): 39–41 (April 1961).

6. S. E. Beall and R. W. Jurgensen, Direct Maintenance Practices for the Homogeneous Reactor Test, USAEC Report ORNL CF-58-4-101, Oak Ridge National Laboratory, April 1958.

7. J. S. Culver, D. M. Shepherd, and C. W. Collins, Inspection and Maintenance Experience with HRE-2, USAEC Report ORNL CF-58-12-154, Oak Ridge National Laboratory, December 1958.

8. P. P. Holz, Dry Maintenance Facility for the HRT, USAEC Report ORNL CF-60-10-85, Oak Ridge National Laboratory, October 1960.

9. J. P. Jarvis, Use of the Dry Maintenance Facility for HRT Maintenance, USAEC Report ORNL TM-354, Oak Ridge National Laboratory, May 1962.

10. Damage to and Repair of the HRE-2 Core Tank, Power Engineering, 65(2): 34–36 (February 1961).

11. H. C. Claiborne, Leak in the Homogeneous Reactor Test Core Tank, Nuclear Safety, 1(1): 15–16 (September 1959).

12. R. B. Briggs, Holes in HRE-2 Core Tank, Nuclear Safety, 2(1): 99–102 (September 1960).

13. E. C. Hise and I. Spiewak, Repair of the HRE-2 Core, Nucleonics, 19(3): 100, 102–103 (March 1961).

14. Homogeneous Reactor Program Quarterly Progress Report for Period Ending July 31, 1960, USAEC Report ORNL 3004, pp. 1–7, Oak Ridge National Laboratory, October 1960.

15. J. S. Culver, Viewing Equipment for Use in the HRT Core and Blanket Vessels, USAEC Report ORNL-2886, Oak Ridge National Laboratory, March 1960.

16. P. P. Holz, Miniature TV Camera Manipulator, USAEC Report ORNL CF-59-11-129, Oak Ridge National Laboratory, November 1959.

17. R. Blumberg, Design and Development of Tools to Cut Loose the Diffuser Screens and Resize the Access Flange in the HRT Core Vessel, USAEC Report ORNL CF-59-11-124, Oak Ridge National Laboratory, November 1959.

18. P. P. Holz, Underwater Electric Arc Cutting Manipulator for HRT Screen Removal, USAEC Report ORNL CF-59-11-130, Oak Ridge National Laboratory, November 1959.

19. P. P. Holz, Electric Torch Cut Up of the HRE-2 Core, USAEC Report ORNL-TM-175, Oak Ridge National Laboratory, in preparation.

20. E. C. Hise, Modification and Repair of the HRE-2 Core Vessel, Proceedings of the Eight Conference on Hot Laboratories and Equipment, 1960, Book 2, pp. 464–474, USAEC Report TID-7599, 1960.

21. B. D. Draper and E. C. Hise, Remote Maintenance Procedure Report, USAEC Report ORNL CF-59-11-128, Oak Ridge National Laboratory, November 1959.

22. P. P. Holz, Some Miscellaneous Maintenance Tools Used to Manipulate Loose Objects in the HRT Core, USAEC Report ORNL CF-59-11-123, Oak Ridge National Laboratory, November 1959.

23. P. P. Holz, Additional Miscellaneous Tools Used in the HRT Core, USAEC Report ORNL CF-60-9-103, Oak Ridge National Laboratory, September 1960.

24. W. B. McDonald, C. K. McGlothlan, and E. Storto, Remote Maintenance Experimental Work on a Reactor System Pump, USAEC Report ORNL CF-58-4-93, Oak Ridge National Laboratory, April 1958.

25. E. C. Hise, MSRE Maintenance Proposal, USAEC Report ORNL CF-60-9-84, Oak Ridge National Laboratory, September 1960.

26. W. B. McDonald, E. Storto, and A. S. Olson, Screening Tests of Mechanical Pipe Joints for a Fused Salt Reactor System, USAEC Report ORNL CF-58-8-33, Oak Ridge National Laboratory, August 1958.

27. P. P. Holz and J. P. Jarvis, Oak Ridge National Laboratory, Personal Communication to D. M. Shepherd, Oak Ridge National Laboratory.

28. P. P. Holz, Ring Joint Spring Clamp Disconnect, USAEC Report ORNL CF-61-7-92, Oak Ridge National Laboratory, July 1961.

29. P. P. Holz, Status of Small Pipe Disconnects for MSRE Auxiliary Lines, USAEC Report ORNL CF-60-9-102, Oak Ridge National Laboratory, September 1960.

30. P. P. Holz, Interim Report — Status of Small Pipe and Tube Disconnects for MSRE Auxiliary Lines, USAEC Report ORNL CF-61-2-58, Oak Ridge National Laboratory, February 1961.

31. P. P. Holz, Development of a Six-Station Manifold Cone-Seat Disconnect, USAEC Report ORNL CF-61-5-117, Oak Ridge National Laboratory, May 1961.

32. Molten Salt Reactor Program Progress Report for Period from March 1 to August 31, 1961, USAEC Report ORNL-3215, pp. 64–5, Oak Ridge National Laboratory, January 1962.

33. P. P. Holz, Combination Ring-Joint Flexitallic Disconnect, Oak Ridge National Laboratory, unpublished data.

34. Molten Salt Reactor Program Semiannual Progress Report for Period Ending February 28, 1962, USAEC Report ORNL-3282, pp. 45 and 51, Oak Ridge National Laboratory, July 1962.

35. E. C. Hise, Oak Ridge National Laboratory, unpublished data.

36. W. P. Kunkel, Radiological Hazards of Calandria Core Removal, USAEC Report NAA-SR Memo 3654, Atomics International Division of North American Aviation, March 1959.

37. H. Strahl and H. Chapman, Maintenance Procedure for SRE Main Primary Sodium Pump, USAEC Report NAA-SR Memo 2201, Atomics International Division of North American Aviation, October 1957.

38. W. H. Maynard, Liquid Metal Fuel Reactor Experiment, Research and Development of Remote Maintenance, Final Report, USAEC Report BAW-1184, Babcock & Wilcox Company, March 1960.

39. J. B. Violette, Radioactive Maintenance Experiences at VBWR, Trans. Am. Nuclear Soc., 4(2): 200–1 (November 1961).

40. H. D. Raleigh, Compiler, Remote-Control Equipment, A Literature Search, USAEC Report TID-3549, March 1960. Contains 149 related references with approximately 16 directly pertinent to nuclear maintenance; includes catalogs and earlier bibliographies.

41. B. D. Draper, Compiler, Bibliography on Maintenance, Maintenance Equipment, and Closures, USAEC Report ORNL CF-57-11-44, Oak Ridge National Laboratory, November 1957. Contains 80 pertinent references.

42. Calder Operation School Manual, British Report NP-6545, United Kingdom Atomic Energy Authority, Industrial Group, Calder Works, Calder Bridge, Cumb, England (Official Use Only)..

43. A. Herreng, Ertaud, and Pasquet, Description Des Réacteurs G2-G3, French Report CEA-952 (1958).

44. The Staff of ORNL, The ORNL Gas Cooled Reactor, USAEC Report ORNL-2500, Parts I, II, and III, Oak Ridge National Laboratory, 1958.

45. MGCR Staff, Evaluation of Coolants and Moderators for the Maritime Gas-Cooled Reactor (MGCR), USAEC Report GA-570, General Dynamics Corp., 1958.

46. Kaiser Engineers and Nuclear Products-ERCO, Gas Cooled Power Reactor Preliminary Design, 30,000 KW Prototype, Partially Enriched Uranium Nuclear Power Plant, USAEC Report IDO-24027 (1959).

47. W. B. Cottrell, C. M. Copenhaver, H. N. Culver, M. H. Fontana, V. J. Kelleghan, and G. Samuels, The HGCR-1, The Design Study of a Nuclear Power Station Employing a High-Temperature Gas-Cooled Reactor with Graphite UO_2 Fuel Elements, USAEC Report ORNL-2653, Oak Ridge National Laboratory, 1959

48. The Pebble Bed Reactor Program, Quarterly Progress Report for Jan. 1, 1960 through March 31, 1960, USAEC Report NYO-9067, Sanderson and Porter, New York, 1960.

49. A. P. Fraas et al., Design Study of a Pebble-Bed Reactor Power Plant, USAEC Report ORNL CF-60-12-5, rev., Oak Ridge National Laboratory, 1961.

50. Oak Ridge National Laboratory Staff, Conceptual Design of the Pebble-Bed Reactor Experiment, USAEC Report ORNL-TM-201, Oak Ridge National Laboratory, May 17, 1962.

51. The Dragon HTGR Project, A Preliminary Design Study, Atomic World, 10(5): 178–179, 185 (May 1959).

52. U. S. Designs Gas-Cooled Reactors, Nucleonics, 16(8): 118–121 (August 1958).

53. R. P. Hammond, W. R. Wykoff, H. M. Busey, J. D. Rogers, F. P. Durham, and K. R. Chapman, Turret – A Test of Unclad Fuel, Nucleonics, 17(12): 106–109 (December 1959).

54. J. S. Burkett, The Dragon Reactor Project After Three Years, Nuclear Power, 7(75): 61–63 (July 1962).

55. D. Bradley, Hydrogen as a Power Reactor Coolant, Nucleonics, 18(7): 84–86, 88 (July 1960).

56. C. Michelson, A. W. Culp, and F. H. Neill, Preliminary Design of a Hydrogen-Cooled In-Pile Loop for the EGCR, USAEC Report ORNL-TM-108, Oak Ridge National Laboratory, July 12, 1962.

57. High-Temperature Fission-Product Traps, Nuclear Safety, 2(2): 39–42 (December 1960).

58. Removal of Fission-Product Activity from Gases, Nuclear Safety, 1(3): 40–46 (March 1960).

59. Removal of Fission-Product Activity from Gases, Nuclear Safety, 1(4): 47–53 (June 1960).

60. Removal of Radioiodine from Reactor Gases, Nuclear Safety, 2(3): 35–39 (March 1961).

61. C. D. Scott and J. C. Suddath, The Helium Purification System for the Proposed 800 MWT Pebble Bed Reactor, USAEC Report ORNL-CF-60-12-2, Oak Ridge National Laboratory, 1960.

62. I. A. Mossop, Filtration of the Gaseous Effluent of an Air-Cooled Reactor, British Chem. Eng., 5: 420–426 (June 1960).

63. J. A. Lane, L. L. Bennett, H. N. Culver, L. J. King, J. P. Sanders, J. L. Scott, and W. E. Unger, A Study of Problems Associated with Release of Fission Products from Ceramic Fuels in Gas-Cooled Reactors, USAEC Report ORNL-2851, Oak Ridge National Laboratory, 1959.

64. R. F. Taylor, Absorption of Iodine Vapour by Aqueous Solutions, British Report AERE CE/R 2469 (1958).

65. R. McNabney and A. M. Lyon, The Removal of Iodine from Gas Streams by Reaction with Silver in Packed Towers, USAEC Report ARSC-28 (Del.), Air Reduction Sales Co., Research Labs, 1959.

66. J. W. Finnigan, R. E. Peterson, H. W. Lefevre, J. W. Culvahouse, and W. J. Friesen, Removal of Iodine Vapor from Gas Stream by Sorption on Charcoal, USAEC Report HW-26113, Hanford Works, 1952.

67. R. E. Adams and W. E. Browning, Proposed Method for Removal of Radio-Iodine from Experimental Off-Gas System of the ORR, USAEC Report ORNL-CF-58-5-59, Oak Ridge National Laboratory, 1958.

68. E. E. Anderson, G. L. Wessman, and L. R. Zumwalt, Iodine Adsorption by Activated Charcoal at Low Partial Pressures, USAEC Report GA-1709, General Atomic (1960).

69. J. Board and M. W. Davies, Aerosol Problems of Nuclear Reactors — The Removal of Radio-Iodine from Reactor Coolant Gas, British Report AERO/CONF/7 (1960).

70. M. A. Wahlgren and W. W. Meinke, Molecular Sieves Absorb Iodine-131 from Air, Nucleonics, 15(9): 156–160 (September 1957).

71. J. R. LaPointe and R. D. Brown, Radioactive Material Control, Ind. and Eng. Chem., 50(7): 980–986 (July 1958).

72. M. Steinberg and B. Manowitz, Recovery of Fission Product Noble Gases, Ind. and Eng. Chem., 51(1): 47–50 (January 1959).

73. R. D. Ackley and W. E. Browning, Jr., Equilibrium Adsorption of Krypton and Xenon on Activated Carbon and Line Molecular Sieves, USAEC Report ORNL-CF-61-2-32, Oak Ridge National Laboratory, 1961.

74. W. E. Browning, R. E. Adams, and R. D. Ackley, Removal of Fission Product Gases from Reactor Off-Gas Streams by Adsorption, Paper presented at ANS Meeting, Detroit, Michigan, Dec. 10, 1958, also USAEC Report ORNL-CF-59-6-47, Oak Ridge National Laboratory, 1959.

75. K. Hintermann, Decontamination of Gases from Nuclear Reactors, Neve Technik, 1(1): 5–12 (1959).

76. K. H. Quasebarth, H. M. Parker, and A. R. Kuhlthau, Concerning Several Methods for the Removal of Fission Products from a Gas Cooled Reactor, USAEC Report NYO-2708, Sanderson and Porter, 1960.

77. Wing Pon, Final Report on Helium Contaminant Removal Feasibility Study, USAEC Report TID-12821, Tracerlab, Inc., 1960.

78. F. A. Anderson, Proposed Helium Purification System for the Experimental Gas-Cooled Reactor (EGCR), USAEC Report ORNL-2819, Oak Ridge National Laboratory, 1959.

79. J. E. Antill and K. A. Peakall, Removal of Graphite by Gaseous Impurities in the HTGCR, British Report AERE M/M 201 (1958).

80. J. E. Antill and K. A. Peakall, Coolant Purity in the HTGCR, British Report AERE-R-3070 (1959).

81. I. Spiewak, Visits July and August 1960 to KEMA, Arnhem, The Netherlands; and to Admiralty Research Laboratory, Bristol Siddeley Ltd., and A.E.R.E. in England, unpublished report, Oak Ridge National Laboratory, 1960.

82. R. E. MacPherson and A. M. Smith, Operation of the EGCR Purification System Prototype, USAEC Report ORNL-CF-61-4-6, Oak Ridge National Laboratory, 1961.

83. C. D. Scott, Evaluation of the EGCR Catalytic Oxidizer for Oxidation of Hydrogen, Carbon Monoxide, and Methane, USAEC Report ORNL-TM-61, Oak Ridge National Laboratory, 1961.

84. C. D. Scott, Kinetics of the Catalyzed Oxidation of Hydrogen, Carbon Monoxide, and Methane by Oxygen in a Flowing Stream of Helium, USAEC Report ORNL-3043, Oak Ridge National Laboratory, 1960.

85. C. D. Scott, The Rate of Reaction of Hydrogen from Hydrogen-Helium Streams with Fixed Beds of Copper Oxide, USAEC Report ORNL-3292, Oak Ridge National Laboratory, July 23, 1962.

86. F. L. Culler, K. B. Brown, J. C. Bresee, R. E. Blanco, D. E. Ferguson, H. E. Goeller, M. E. Whatley, Chemical Technology Division Annual Progress Report for Period Ending June 30, 1962, USAEC Report ORNL-3314, Oak Ridge National Laboratory (in press).

87. Activity Build-up, Nuclear Safety, 1(1): 31–32 (September 1959).

88. E. G. Bohlmann, Activity Build-up in Pressurized Water Reactor Systems, Nuclear Safety, 3(2): 20–22 (December 1961).

89. H. N. Culver, Cooling Water and Demineralizer Activities in NMSR, USAEC Report ORNL CF-58-5-83, Oak Ridge National Laboratory, May 1958.

90. N. Michael and M. Bell, Evaluation of Ion Exchange Resins for Use in the Yankee Reactor, USAEC Report YAEC-115, Westinghouse Electric Corporation, July 1959.

91. J. C. Ward, Radioactivity of Nuclear Reactor Cooling Fluids (Thesis), USAEC Report ORNL-3152, Oak Ridge National Laboratory, September 20, 1961.

92. A. L. Biladeau, Re-use of Cooling Water in an Atomic Energy Commission Installation, Ind. Eng. Chem., 48(12): 2159–2161 (December 1956).

93. D. M. Wroughton and P. Cohen, Radioactivity Levels in Pressurized Water Reactor System, USAEC Report WAPD-T-715, Westinghouse Electric Corporation, 1958.

94. A. L. Medin (ed.), Literature Survey for Activity Build-up on Reactor Primary System Components, USAEC Report APAE-25, Alco Products, Inc., January 15, 1958.

95. C. Calmon and T. R. E. Kressman (eds.), Ion Exchangers in Organic and Biochemistry, Interscience Publishers, Inc., New York, 1957.

96. R. Kunin, Ion Exchange Resins, 2nd. ed., John Wiley and Sons., Inc., New York, 1958.

97. W. T. Lindsay, Jr., and C. S. Abrams, Ion Exchange Removal of Fission Products from High Purity Water, USAEC Report WAPD-PWR-CP-2636, Westinghouse Electric Corporation, no date.

98. G. P. Simon, C. S. Abrams, and W. T. Lindsay, Jr., The Performance of Base-Form Ion Exchangers for pH Control and Removal of Radioisotopes from a Pressurized Water Reactor System, USAEC Report WAPD-TM-215, Westinghouse Electric Corporation, July 1960.

99. Final System Design Specification for Primary Loop Purification System and Final Equipment Specification for Demineralizer, The Babcock & Wilcox Co., Lynchburg, Virginia.

100. Bettis Technical Review, One Year of Operating Experience at Shippingport, USAEC Report WAPD-BT-12, Westinghouse Electric Corporation, April 1959.

101. B. de La Morinerie, Water Treatment and Safety in Nuclear Plants, Rass. Intern. Elettron, Nucl., 6°, Rome, 1959, Atti. Congr. Sci. Sez. Nucl., 2, Pt. 2, 413–429 (1959) (in French).

102. The Shippingport Pressurized Water Reactor, Addison-Wesley Publishing Co., Inc., Reading, Massachusetts, 1958.

103. Nuclear Merchant Ship Reactor – Determination of the Purification Rate for Normal Operation, BAW-1015 (rev.) Babcock & Wilcox Company, Lynchburg, Va., June 1958.

104. J. K. Dawson and G. Long, Chemistry of Nuclear Power, George Newnes Limited, London, 1959.

105. R. L. Witzke, A Pressurized Water Reactor Plant, pp. 39–43 in Proceedings of the Conference on Peaceful Uses of Atomic Energy, Tokyo, Japan, May 13–17, 1957, Japan Atomic Industrial Forum, Inc., Tokyo, 1957.

106. A. L. Boch, Maritime Reactor Project Annual Progress Report for Period Ending November 30, 1958, USAEC Report ORNL-2657, Oak Ridge National Laboratory, January 1959, p. 16.

107. A. W. Kramer, Boiling Water Reactors, Addison-Wesley Publishing Co., Inc., Reading, Massachusetts, 1958.

108. J. K. Pickard, F. H. Warren, W. W. Lowe, and S. McLain (eds.), Power Reactor Technology, D. Van Nostrand Co., Inc., Princeton, N. J., 1961.

109. H. R. McK. Hyder (ed.), Progress in Nuclear Energy, Series II, Reactors, Vol. 2, Pergamon Press, New York, 1961.

110. Chemical Engineering Division Summary Report for April, May, and June 1949, USAEC Report ANL-4329 (Del.), Argonne National Laboratory, p. 57.

111. W. A. Rodger and P. Fineman, Liquid Waste Treatment and Disposal, pp. 484–511 in Reactor Handbook, 2nd ed., Vol. II, Fuel Reprocessing, Interscience Publishers, Inc., New York, 1961.

112. H. M. Parker and L. H. McEwen, Status of Plutonium Recycle Studies at the Hanford Laboratories, Proceedings of the Conference on Small and Medium Power Reactors, Vienna, 1960, Vol. II, pp. 35–55, International Atomic Energy Agency, Vienna, Austria, 1961.

113. W. H. McCorkle, Heavy Water in Nuclear Reactors, Nucleonics, 11(5): 21–25 (May 1953).

114. Elizabeth W. Baumann, Minature Purification Progress Report, USAEC Report DP-678, Savannah River Laboratory, February 1962.

115. Removal of Fission-Product Activity from Gases, Nuclear Safety, 1(3): 40–46 (March 1960); Removal of Radioiodine from Gases, Nuclear Safety, 2(3): 35–38 (March 1961).

116. A. R. Bancroft, L. C. Watson, and R. Hewitt, Tests on Collectors to Remove Iodine from Ventilation Air, Atomic Energy of Canada Limited Report CRCE-981 (October 31, 1961).

117. F. Billard, G. Chevalier, and J. Pradel, Commissariat a l'Energie Atomique, Fontenay-aux-Roses, France, Personal communication; paper delivered at Health Physics Society Meeting, June 11–14, 1962, Chicago, Illinois.

118. J. Rosinski, Scavenging of Radioactive Particulate Matter and Aerosols in Connection with Nuclear Reactor Operation, Armour Research Foundation Report ARF-3184-14 (Jan. 31, 1962); also issued as USAEC Report TID-15305.

119. S. Kitani and H. Ezure, Adsorption of Radioactive Iodine Vapor in Air Streams on Molecular Sieves 5A, J. Atomic Energy Soc., Japan, 3: 787–791 (October 1961).

120. R. E. Adams and W. E. Browning, Jr., Iodine Filter Testing on Maritime Reactor Program, p. 15 in USAEC Report ORNL-3321, Oak Ridge National Laboratory, June 1962.

121. L. C. Watson, A. R. Bancroft, and C. W. Hoelke, Iodine Containment by Dousing in NPD-II, Atomic Energy of Canada Limited Report CRCE-979 (AECL-1130) (October 27, 1960).

122. J. Board and M. W. Davies, General Electric Company and UKAEA, Harwell, Paper delivered at Conference on Aerosol Problems of Nuclear Reactors, Harwell, England (December 7–8, 1960).

123. J. F. W. Smith and R. H. A. Crawley, English Electric Company and UKAEA, Harwell, Paper delivered at Conference on Aerosol Problems of Nuclear Reactors, Harwell, England (December 7–8, 1960); Also Nuclear Eng., 6: 428–430 (October 1961).

124. R. B. Andrews, V. J. Emerson, and F. Hudswell, Sorption of Iodine by Solids, Chemistry Division, UKAEA, Harwell Paper delivered at Conference on Aerosol Problems of Nuclear Reactors, Harwell, England (December 7–8, 1960).

125. R. M. Watkins, D. D. Busch, and L. R. Zumwalt, High Temperature Fission Product Trap Study for Gas-Cooled Reactors, Trans. Am. Nuclear Soc., 4(1): 66 (June 1961).

126. R. E. Adams and W. E. Browning, Jr., Removal of Radioiodine Vapor from Gases at Elevated Temperatures, Trans. Am. Nuclear Soc., 5(1): 259 (June 1962); also paper delivered at Seventh AEC Air Cleaning Seminar, Brookhaven National Laboratory, October 10–12, 1961, to be issued as USAEC-TID report.

127. W. E. Browning, Jr. and R. D. Ackley, Characterization of Gas-Borne Radioactive Materials by a Diffusion Cell Technique, Trans. Am. Nuclear Soc., 5(1): 258 (June 1962).

V. CONSEQUENCES OF ACTIVITY RELEASE

THE AREA WITHIN GROUND-LEVEL ISOPLETHS

F. A. Gifford, Jr.
U.S. Weather Bureau

The total radioactive dosage to a population has frequently been identified as an important aspect of the potential hazard associated with reactor accidents. Gomberg[1] and Cottrell et al.,[2] for example, have calculated such total population dosages in reactor safety analyses. The importance of the total population dosage was recognized in connection with the recently published reactor site criteria guides[3] (see also DiNunno et al.[4]). It is evident that a reasonably simple means for computing this quantity would be very useful.

The total population dosage is equal to the product of people times radioactive dosage, summed over the population, with appropriate high- and low-dosage cutoffs taken into account. In order to expedite computation of this quantity it is evidently necessary to be able to calculate the area inside ground-level isodose contours; that is, the intersection between the surface formed by a given air concentration or dosage value and the ground. A number of recent papers have dealt with this subject.

Based on ground-level air-concentration isopleths computed by means of the generalized Gaussian dispersion model described previously in Nuclear Safety,[5] Hilsmeier and Gifford[6] recently computed the area enclosed by a range of concentration values, χ_E, as a function of Pasquill's[7] diffusion types A through F. The result is displayed in Fig. V-1. These curves can be used directly to estimate the area inside a given concentration isopleth. Application of the diffusion types was discussed in a previous issue of Nuclear Safety.[8]

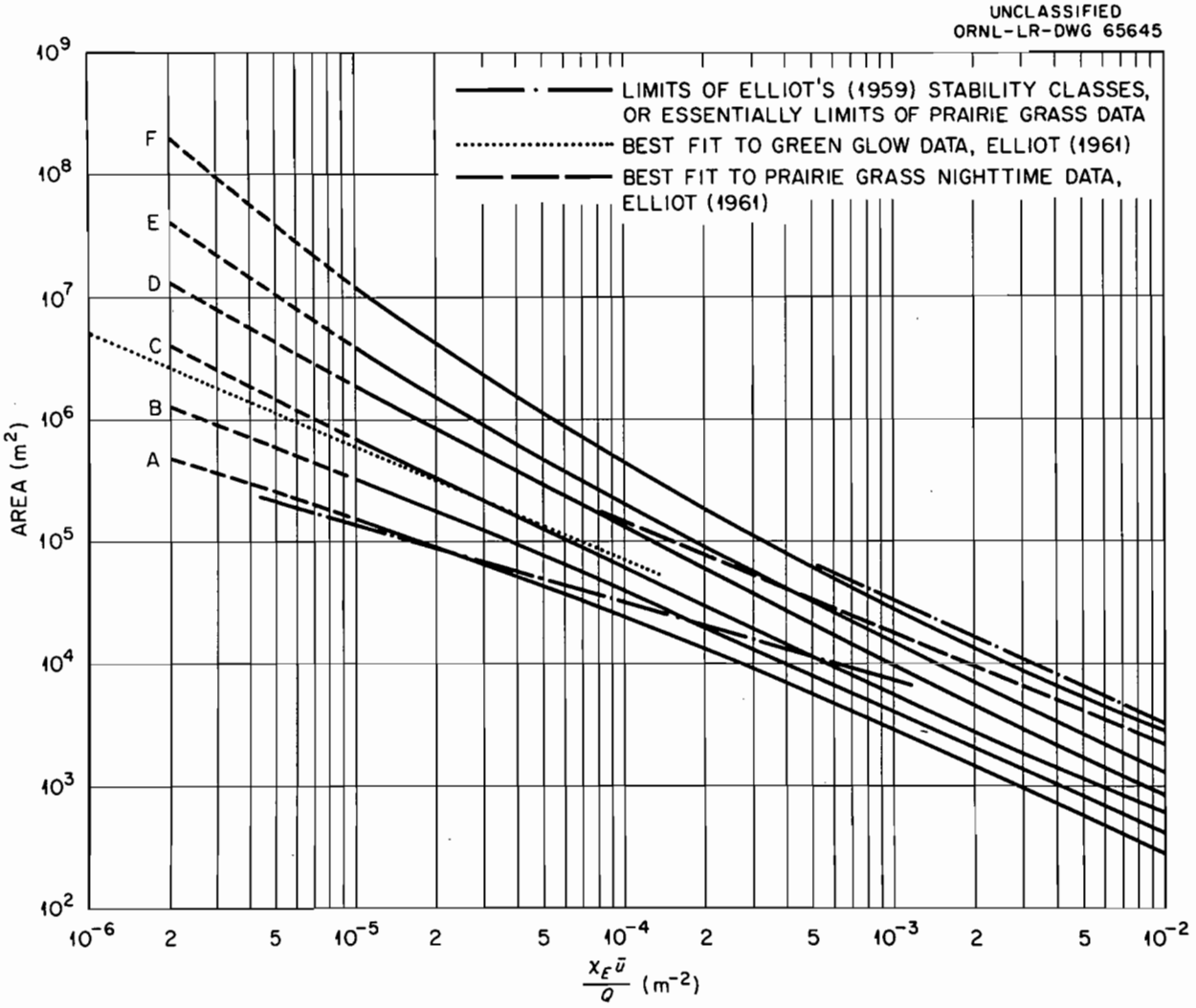

Fig. V-1. Area, m^2, Within Ground-Level Concentration Isopleth as a Function of Pasquill's Diffusion Types A Through F Compared with Some Experimental Values. (Note: E = constant, g or c per m^3, for steady, ground level source of strength Q, g or c per sec, and mean wind $\bar{u}$, m/sec.

Recent observational studies of atmospheric dispersion, the Prairie Grass and Greenglow projects, have been analyzed from the standpoint of area-dosage isopleths by Elliott.[9,10] The Prairie Grass data covered a wide range of atmospheric stability conditions, as described previously in Nuclear Safety,[11] that essentially corresponded to Pasquill's types A (unstable, light wind) through F (very stable). The Greenglow data were obtained under moderately stable conditions and extended to great distances (16 miles). The sources were near ground level during each of the experimental series. Best fit lines to these data are indicated in Fig. V-1. The Greenglow data appear to fit type C, that is, the near neutral curve rather than one corresponding to more stable conditions. The reason for this is not known.

An extensive numerical computation of areas within concentration isopleths, based on Sutton's dispersion model, was undertaken by Rosinski[12] and a concise nomographic presentation of these results has been given by Gifford.[13] Rosinski's computation allowed for the effect of varying ground deposition rates. A similar computation was performed by Velez,[14] who included the effects of varying source height and radioactive decay of mixed fission products.

Nishiwaka[15] also used Sutton's model to estimate concentration isopleth areas. In addition, he has provided several useful approximations to the isopleth area based on the areas of equivalent ellipses. These formulas, which give the area, A, within a concentration isopleth, χ_E, for a surface level source, are:

$$A_1 \cong \frac{(2\pi)^{1/2}}{(2-n)} C_y \, e^{-[2-(n/2)]/(2-n)} \, \gamma^{2-(n/2)} \quad , \qquad (1)$$

$$A_2 \cong \frac{\pi}{2} C_y \, e^{-1/2} \, \gamma^{2-(n/2)} \quad , \tag{2}$$

$$A_3 \cong \frac{\pi}{4} 2^{n/2} \, C'_\gamma \, (\ln 2)^{1/2} \, \gamma^{2-(n/2)} \quad , \tag{3}$$

where

$$\gamma = \left(\frac{2Q}{X_E \bar{u} \pi C_y C_z} \right)^{n-2} \quad , \tag{4}$$

and C_y, C_z, and n are the usual Sutton dispersion parameters (see ref. 11), and Q is source strength, in quantity units (i.e., grams or curies) per second. The error of these useful approximations is $\leq 6\%$, for A_1 and $\leq 3\%$ for A_2 and A_3, relative to the area values that follow from the exact formula.

ESTIMATION OF MPC VALUES FOR MIXTURES OF RADIONUCLIDES

Although the recommendations of the ICRP[16] and the NCRP[17] list maximum permissible concentrations (MPC) for some 240 radionuclides in air or in water, the practicing health physicist will often find it necessary to recalculate or to adjust these values in accordance with the exposure situation. Such adjustments are necessary because the primary standard of radiation protection is a limit on dose (maximum permissible dose or MPD) delivered to body tissues, while the MPC is only a derived standard designed to achieve the MPD under certain conditions. As the exposure conditions change, a change in the MPC may be necessary.

One of the most common adjustments of MPC values required is that which corrects for simultaneous exposure to several sources of radiation, whether external sources or a variety of radionuclides in air, food, or water are in question. The publications indicated in refs. 18-25 are concerned with this problem and illustrate some of the different approaches. Within the rationale of MPC estimation, the procedure of adjustment is basically a very simple and logical consequence of the assumptions made in estimating MPC values. The complexities arise from the great variety of factors that may require consideration and from data which are, in many cases, not adequate.

The $(MPC)_w$, for example, represents a level of water contamination which if consumed by an "average" or "standard" adult during 50 years of adult life will result in a quarterly dose to a designated organ of reference that does not exceed a recommended limit. More specifically, the assumptions may be indicated as follows:

1. Assumptions concerning the individual:

(a) a "standard" adult;

(b) specified intakes per day of water, air, or food;

(c) a radiation worker who will continue this work for 50 years.

2. Assumptions concerning the environment:

(a) a constant level of exposure during a 50-year period;

(b) only one radionuclide and one route of ingestion considered; for example, Sr^{90} in drinking water;

(c) the contaminants are precisely known in chemical form and in quantity.

Subject to these limitations, it is desired to estimate an (MPC) from a given source, or vector, which will effectively limit the quarterly dose to a designated organ, for example, the skeleton, to R rems. It is realized that individuals differ in physique and habits, that the data are insufficient, and that even under the above conditions there will be a spread of dose values actually received. Perhaps this may be taken into account in the choice of R or in other ways. However, exposure situations usually encountered will fail to satisfy all the above assumptions; thus adjustment is required.

Assumptions Concerning the Individual

The publications listed as refs. 18–25 are concerned with specific problems such as discharge of various radionuclides into a river or ocean or exposure to mixed fission products following a reactor accident. In these situations the concern is usually with a general population group rather than with occupational workers. Thus the MPC for the various radionuclides must be adjusted for differing characteristics of members of

the group at risk and occupational workers, or the so-called "standard man." These adjustments will correspond somewhat to the three assumptions listed under item 1 above.

Various categories of individuals, and even specific individuals, in the population have been given different basic dose limits (MPD's) according to the recommendations of the ICRP, the NCRP, and the Federal Radiation Council (FRC). [The recommendations of the latter, when signed by the President, are binding on federal agencies. To date the FRC has only defined radiation protection guides (RPG) and radiation daily intake guides (RIG) for certain cases.] For example, the ICRP has recommended different basic dose limits for a population group living near a controlled area (e.g., an atomic energy plant) and for the population at large. The FRC has recommended a different annual dose (RPG) for the child's thyroid than would be required for the adult thyroid in the case of population exposure. Thus, the individual or group under consideration must be specified before the MPC can be estimated. A critical organ also must be specified before the MPC can be determined. In principle all organs and tissues are to be considered in turn, but in practice some knowledge of the radionuclides present in significant amounts and their metabolism will suffice to eliminate many of the cases. A more precise specification of a "significant amount" will be developed below.

When the type of individual, the organ of reference, and the MPD have been selected, a particular contaminant is considered. In principle the chemical form of this element should be known, since this may affect the metabolism. Although the published MPC values[16,17] refer only to "soluble" and "insoluble" forms, ref.16 lists the various factors used

to define uptake, and thus the MPC can be adjusted on a continuous scale when the relevant data for establishing the degree of uptake by the organ are available.

If the individual is a child or has some habits or characteristics that differ markedly from those of the standard man, an allowance for this can be made. In the case of children, organ weights and intake of air, food, or water often require an adjustment of the MPC. The most drastic such adjustment has been in the case of I^{131}, because the size of an infant's thyroid is only one-tenth that of the adult; thus an adjustment factor of 1/10 is required for the MPC. Moreover, the FRC has recommended that the RPG for the child's thyroid is 1/20 of the occupational RPG, since there is some evidence suggesting that the assumption that the thyroid is more radioresistant than other tissues may be unwarranted in the case of children. This factor of 1/20 used to obtain an RPG for the child's thyroid results in a scale factor of 1/20 on the MPC, making a total reduction factor of 1/200. Since the RIG or MPC will be computed for an "average" child, the factor is further reduced to 1/600 to allow for individual variation.

Assumptions Concerning the Environment

From considerations such as the above, an MPC for the individual for a particular contaminant can be derived or obtained by adjustment. This MPC is still only relevant to the one contaminant and vector carrying it, for example, Sr^{90} in milk, and for the organ of reference selected.

The exposure situation must also be considered and may enforce further adjustments. The exposure level is usually not constant and may, in fact,

represent a transient situation. While most MPC calculations are based on assumption 2(a), this may not be in accord with the facts. A radionuclide of short radioactive half-life, or one which is quickly eliminated from the body, will produce dose fluctuations in the tissues which follow the level of contamination with a certain time lag. These fluctuations need not be considered if they are short compared with a quarter (3 months) or a year, since these are periods over which the guides permit doses to be averaged.

In the case of a single short-term exposure, such as might result from a reactor accident, and where the probability of a repetition is considered to be remote, the MPC can be used to obtain an estimate of total dose, accumulated over 50 years, resulting from the short-term intake of material. This relation seems to have been first noted by Duhamel and Lavie[19] and states that a daily intake of a radionuclide at the MPC level delivers a total dose during the succeeding 50 years that amounts to a daily dose at the level of the MPD. This dose may be distributed throughout the 40-year period if the half-life is long or it may be delivered quickly if the half-life is short.

Exact Determination of MPC of Mixtures

When MPC values for the relevant radionuclides and vectors are at hand, there remains the matter of combining these to obtain an estimate of the degree of exposure from all the sources present. Each such MPC represents a level of intake that would deliver an MPD, in rem per year or per quarter, to the critical organ. Within limits of the permissible levels, this dose will be proportional to the level of daily intake.

To phrase this more specifically and quantitatively, suppose that an $(MPC)_v^x$ is a concentration level of radionuclide x in a vector v (air, water, milk, cheese, etc.); that is, the concentration of radionuclide x at the level of $(MPC)_v^x$ in vector v results in attaining the MPD in the chosen organ of reference. This may be represented symbolically by the relation $(MPC)_v^x \sim MPD$. Then, if C_v^x is the observed concentration of radionuclide x in vector v, by proportionality $C_v^x \sim [C_v^x/(MPC)_v^x] \times MPD$. Summing this expression over all vectors v and radionuclides x that are involved gives the total dose delivered to the organ of reference. This dose, in rem, is then

$$MPD \times \sum_{x,v} \left[\frac{C_v^x}{(MPC)_v^x} \right] ,$$

and for this to be within the guide specification, the defining relation must be met:

$$\sum_{x,v} \left[\frac{C_v^x}{(MPC)_v^x} \right] \leq 1 \quad . \tag{1}$$

The FRC has chosen to list its guides on levels of contamination in the form of daily intakes. In many ways this is an attractive approach, which, in practice, is equivalent to determining an MPC. The amount of intake permitted per day involves all the considerations necessary to establish an MPC for a given vector. Because a daily intake of b μc/day is found admissible for intake via drinking water, it does not follow that b μc/day is admissible if the vector is air, or milk, etc. Thus, the same factors must be considered to the same degree of precision

in the one case as in the other. However, whenever intake levels of the food, air, or water are available, it is a simpler matter to convert from one to the other. This must be done if relation (1) is to be used by a federal agency, since the guides[18] given by the FRC in its Report No. 2 for Sr^{89}, Sr^{90}, I^{131}, and Ra^{226} are only given in terms of a daily intake.

Approximate Methods

The treatment cited above is theoretically precise but may demand extensive derivation of MPC values to suit the particular case precisely. It is possible to introduce a variety of simplifications which can be used and yet be sure that the estimate is substantially correct or does not permit an excessive dose.

1. Radionuclides not present in "significant amounts" may be neglected. The above discussion makes it quite clear what the interpretation of the phrase "significant amount" must be. If the presence of radionuclide x in vector v is neglected, the dose, in rem, to the organ of reference is underestimated by the amount:

$$\left[\frac{C_v^x}{(MPC)_v^x}\right] \times MPD \quad .$$

To be considered as insignificant, the fraction

$$\frac{C_v^x}{(MPC)_v^x} \ll 1 \quad ,$$

since this is the fraction of the MPD that is neglected.

2. A second simplification is to consider only one unspecified organ as the organ of reference and to use, in place of the $(MPC)_v^x$ for a specific

organ, the smallest MPC value obtained for all organs or tissues. Thus Eq. 1 need not be recomputed for many body organs. Moreover, refs. 16 and 17 give these lowest MPC values so that they can be obtained readily. To establish that this practice "is on the safe side," consider that $(MPC)_v^x$ is the correct MPC for the organ of reference, σ, that was chosen, but another organ of reference, σ^*, results in a smaller MPC, for example, $(MPC)_v^{x*}$. Then the concentration level $(MPC)_v^{x*}$ results in less dose than the MPD to organ σ, since otherwise $(MPC)_v^{x*}$ would not be less than $(MPC)_v^x$. In fact, the replacement of $(MPC)_v^x$ by $(MPC)_v^{x*}$ in Eq. (1) is equivalent to overestimating the dose to the organ corresponding to this term by the factor $(MPC)_v^x/(MPC)_v^{x*}$. This is usually not critical; therefore, in using such equations, the organ of reference often is not specified. The various criteria in refs. 21 and 22 are based on this approach. On the other hand, refs. 23 and 24 use the more precise method of estimating for several organs of reference.

3. A more drastic simplification can be achieved, but again at the price of some loss of precision in relation (1); that is, the simplified relation might be more restrictive than absolutely necessary if the precise evaluation were used. There may be good reason to know that only certain radionuclides x can be involved, and the smallest of these relevant MPC values can be denoted by m. If each more precise $(MPC)_v^x$ is replaced by m, the effect is to increase the left member of Eq. (1). Thus if

$$\sum_{x,v} C_v^x \leq m \quad ,$$

the more precise relation (1) will also be satisfied. The expression:

$$\sum_{x,v} C_v^x$$

may be termed the total activity per unit volume (the unit of volume normally used in methods 1 and 2 is milliliters), and, while it may present practical difficulties of measurement, it can be a very useful rough check. In a case such as that indicated above, where certain materials are excluded and a single value m is known not to exceed any of the relevant MPC values, the simplification becomes great. It is no longer necessary to measure the concentrations of the various radionuclides separately but only to get an estimate of the total activity. Such a value m is termed an "MPC for unidentified radionuclides," but this phrase is at best cryptic, if not misleading.

In the precise sense, it is truly not an MPC for most of the radionuclides concerned, but it is a number which exceeds none of those MPC values. Thus it can be used with safety in relation (1), but it goes without saying that precision suffers, and the simplified relation may be much more restrictive than is strictly necessary. Yet this loss of precision may be warranted by the saving of time or money involved in making a more precise analysis. Such an oversimplified evaluation may be all that can be obtained, particularly in emergency situations where time is of the essence and only scanty data may be available. Reference 25 discusses the principle involved here and points out some errors and alternatives to the formulation of such MPC's for unidentified radionuclides. From the principles involved, it is clear that each health physicist can survey his area of responsibility, decide what radionuclides

can be ruled out as not likely to occur, and arrive at his own choice of m. Thus, there is no one value that is "best" for all operations.

4. As an alternative to the determination of even approximately conservative values by adjusting the individual MPC values, it is possible to simply begin with whatever assumptions are in accord with the actual situation. Thus the paper of Greitz,[20] in estimating the dose to the GI tract from mixed fission products, chooses to ignore the actual elements present and bases the estimation on a postulated initial β,γ activity and the well-known decay law of $T^{-1.2}$ for such activity. Here, as in most such cases, it is necessary to obtain or assume a variety of factors representing the environmental or biological facts that are relevant. Examples include such questions as whether weathering will effect the more rapid removal of some nuclides and change the law of decay, what degree of absorption through the GI tract mixed fission products might have shown, and whether preferential absorption might change the decay law for the contents of the GI tract. In some cases plausible answers to such questions may be obtained or inferred, but usually the procedure is as detailed as the consideration of individual radionuclides would be. (W. S. Snyder and Mary R. Ford)

SELECTION OF SAMPLES FOR AREA MONITORING

Throughout the history of the nuclear industry there has been increasing emphasis on environmental sampling. Since the early 1940's when such sampling first began, the criteria for acceptable amounts of radioactive contamination in the environment have been repeatedly lowered. During the same period, the number of sources of radioactivity release and the variety of potential contaminants have increased greatly. Furthermore, as a result of publicity concerning fallout from weapons tests, the general public has become increasingly sensitive to the question of radioactivity in the environment. Because of this increasing concern by the public and by regulatory groups, because of the greater variety and higher probability of contamination, and because of the decreasing control level, the health physicists and the public health officials now face a serious dilemma. In order to characterize the contamination levels in the environment, a great many samples are needed; however, the economic and logistic problems of sample collection and analysis and the time required to interpret the data set practical limitations on the number of samples which can be utilized. It is the purpose of this review to summarize some of the factors affecting the selection of samples for area monitoring and to note some of the steps required to ensure adequate coverage.

The importance of obtaining a representative sample cannot be overemphasized. Similarly, it is important to maintain a flexible program that is capable of adaption to new conditions. Although precise rules cannot be stated for selecting suitable samples, the following general factors are important in the establishment of a sampling program:

1. Motivation for the program — legal, health, operation, or research.

2. Local environmental conditions — background radioactivity, location of populated areas, agricultural practices, topography, meteorological conditions, and the size of the area to be monitored.
3. Type of samples collected — gaseous or liquid waste effluents, environmental samples, feeds, and foods.
4. Requirements of speed and accuracy.

Motivation

Before beginning an environmental sampling program, the question of what information is desired from the samples should be answered. In general, sampling programs are designed to achieve one or more of the following objectives:

1. To provide legal data and to meet requirements of federal and state regulations regarding conditions resulting from plant operations.
2. To determine the source of contamination problems.
3. To provide quantitative information for initiation of remedial action.
4. To access the improvement achieved by polution control measures (or deterioration resulting from lack of adequate contol).
5. To provide research and development data related to the improvement of the monitoring program.

Prior to the establishment of the Federal Radiation Council (FRC), the regulatory bodies gave little attention to criteria required for surveillance of the environment. The advisory groups, the International Commission on Radiological Protection (ICRP), and the National Committee on Radiation Protection (NCRP), published maximum permissible concentrations (MPC) of radioactive contamination in air and water but gave no

specific guidance with respect to foods or other environmental materials.[26,27] General comments of the ICRP relative to environmental and food contamination are given in the 1959 Report of Committee II.

> "Members of the population at large may be exposed to radiation that cannot be related to any specific controlled area; e.g. exposure from environmental contamination and widely distributed radiation sources such as wrist watches, TV-sets and various applications of radioactive materials to be expected as a result of future expansion in the atomic energy field. As such exposure is not easily controlled, it will be impossible to ensure that a recommended maximum permissible individual dose is not exceeded in any single case. Where large numbers are involved, it will not be possible to examine the habits of every individual. A reasonable procedure would be to study a sample of the group involved and to set the environmental level so that no individual in the sample receives any excessive exposure. There will always remain the possibility that someone of grossly different habits from those in the observed sample may receive higher dose than the maximum in the sample."
>
> . . . . . .
>
> "Surveys prior to use of controlled areas
>
> "In those instances where the operations in a controlled area may disturb or alter significantly the environment with respect to radiation hazards, adequate surveys should be made of the radioactivity of the air, soil, and water prior to the start of operations. This will provide a base line from which to judge the adequacy of radiation controls within the area.
>
> "During and after installation, appropriate radiation surveys shall be made to ensure that the pertinent recommendations will be complied with when routine operations commence. Routine operations shall be deferred until such compliance is assured.
>
> "When additional operations are planned in the area, a thorough survey should be made of the background radiation prior to the start of the new operations. This will aid in the identification of the operation responsible for any increase of the background radiation or the contamination in the area."
>
> . . . . . .
>
> "The $(MPC)_w$ values listed here may be applied to foods, but to use the $(MPC)_w$ for the 168 hr week without correction amounts to assuming that 2200 g of the individual's food, i.e. substantially all his food, is contaminated at this level and that this situation will persist for 50 years, or until equilibrium is reached in the body. Obviously, a correction factor to take account of the intake is needed, but to naively use the ratio of

> 2200 g to the gram intake of a particular food, e.g. butter, per day as correction factor amounts to assuming no other foods or beverages are contaminated. Again, the total situation must be considered and great judgment must be used in making such corrections."

The first staff report of the FRC introduced the term "Radiation Protection Guide (RPG)" and described an operational technique defining a "suitable sample" of the exposed population to be used where individual whole body doses are not known.[28,29]

> "Radiation Protection Guide (RPG) is the radiation dose which should not be exceeded without careful consideration of the reasons for doing so; every effort should be made to encourage the maintenance of radiation doses as far below this guide as practicable."[28]
>
> . . . . . .
>
> "...a 'suitable sample' of the exposed population [is one] in which the [radiation protection] guide for the average exposure of the sample should be one-third the RPG for individual members of the group."[29]

The first FRC report[28] also introduced the term "Radioactivity Concentration Guide," but FRC Report No. 2 does not use the term except to indicate that agencies "...may find the term ... useful in some of their programs."[29] FRC Report No. 2 went much further than previous groups in discussing control of environmental radioactivity:

> "The objective of the control of population exposure from radionuclides occurring in the environment is to assure that appropriate RPG's are not exceeded. This control is accomplished in general either by restrictions on the entry of radioactive materials into the environment or through measures designed to limit the intake of such materials by members of the population. The most direct means of evaluating the effectiveness of control measures is the determination of the amount of radioactive material in the bodies of the members of exposed population groups. Although the determination of such body burdens may at times be indicated, in routine practice potential exposures will generally be assessed on the basis of either one or a combination of two general approaches: (1) calculations based upon known amounts of radioactive material released to the environment, and assumptions as to the fraction of this material reaching exposed population groups, or (2) environmental measurements of the amount of radioactive material in various environmental media.

> "Both of these general approaches involve the calculation or determination of actual or potential concentration of radioactive material in air, water or food. As stated above, controls should be based upon an evaluation of population exposure with respect to the RPG. For this purpose, the average total daily intake of radioactive materials by exposed population groups, averaged over periods of the order of a year, constitutes an appropriate criterion."

FRC Report No. 2 suggests a graded approach for monitoring radionuclides "involving three ranges of transient rates of daily intake applicable to different degrees or kinds of actions."[29]

> "A suggested graded system of action is outlined below. For each of the three ranges of transient rates of daily intake, specific values for which are given in the sections devoted to the specific radionuclides, the general type of action appropriate for the range is outlined."

The ranges of transient rates of intake for four specific radionuclides (Ra^{226}, I^{131}, Sr^{90}, Sr^{89}) were established for the guidance of Federal agencies by approval of the President.[30]

Local Environmental Conditions

There has been much discussion on the relative merits and the planning of preoperational monitoring of environmental background contamination.[31-34] A recent paper presents the opinion of one operator of a large nuclear plant regarding the value of his preoperational survey on the basis of ten years monitoring experience during operation.[35]

> "A wide diversity of opinion exists in the United States and abroad on the requirement, purpose, and form of a survey for environmental radioactivity prior to the operation of a nuclear facility. Generally, the literature on this topic reflects the views of individuals or groups who were planning or just beginning a preoperational survey, and those who have never been involved in this type of survey. This paper gives the view of an operator of a large nuclear plant who conducted an extensive environmental survey in 1951. Over 6000 samples were collected and analyzed prior to the commencement of the Plant operation. On the tenth anniversary of this survey, its deficiencies and

> its usefulness were assessed. Experience indicates that the pre-operational survey contributed substantially to the effectiveness of the present environmental monitoring program at the Savannah River Plant."

The selection of specific types and numbers of samples for establishing background levels of contamination should follow the same pattern as that which is expected to control the future monitoring program. For example, in addition to local sampling sites, many installations employ remote sampling stations to provide a continuing baseline for evaluating ambient background conditions, as indicated in Tabe V-1, which was adapted from the work of Whipple.[32]

In the selection of specific sampling stations, consideration is given to areas in which the "heaviest" deposition or "average" conditions are expected to occur, to areas involving sensitive industries, and to populated areas. Land and water use are controlling factors in placement of sampling locations. Agricultural practices, such as use of contaminated stream water for crop irrigation, or the proximity of grazing lands, may require collection of related samples. Similarly, the use of streams for recreation, for public water supply, and for commercial purposes (fishing, photographic film production, etc.) also strongly influences the number of continuous sampling stations and the frequency of spot sampling.

Local topographical features will determine the location and the flow patterns of streams and will influence, and at times control, the conditions for meteorological dispersion of airborne radioactive materials. The complexity of predicting the location and the dilution of airborne pollutant clouds requires the aid of a competent meteorologist in the initial selection of appropriate sampling sites. Use of gaseous effluent

Table V-1. SUGGESTED SAMPLING LOCATIONS FOR PREOPERATIONAL SURVEY FOR A POWER REACTOR

Media	Type of Sample	Sampling Method	Number of Collecting Locations[a]				
			On Site	½ to 5 Miles	Beyond 5 Miles	Beyond Plant[b] Influence	Total
Air	Fallout and rainout	Collecting trays	10	50	50	10	120
	Particulates	Filter, integrating[c]	2	4	6[d]	2	14
	Particulates	Filter, continuous					
	β-γ radiation	Counter, or ion chamber, continuous[e]	2	2	2[d]	1	7
	γ radiation	Counter, or ion chamber, continuous					
	Meteorologic[f]	Continuous	1	1	1	0	3
Surface water	Water	Proportional	1	2[g]	2[g]	1	6
	Water	Spot					
	Mud and silt	Spot					
	Fish	Spot	2	6	6	2	16
	Plants	Spot					
	Bivalves	Spot					
	Algae and plankton	Spot					
Ground water	Water	Proportional	1	2[h]	2[h]	0	5
	Water	Spot	3	4[i]	6[i]	3	16
Sewage	Water and solids	Spot	1	2	2	1	6
Land	Soil	Spot					
	Plants	Spot	3	8	8	4	23
	Animals[j]	Spot					

[a]All quantities are to be taken as ±50%.

[b]To provide a background reference after the plant is in operation.

[c]Continuous collection, read-out of average at 1 to 7 day intervals.

[d]One or more of these stations might be mobile.

[e]Continuous collection, read-out of average at 3 to 12 hour intervals (radiation monitors at 30 to 60 min).

[f]Meteorological variables: wind speed, wind direction, temperature, and precipitation.

[g]At first point of use.

[h]At representative wells used for drinking water.

[i]At all other wells used for drinking water.

[j]Including cows' milk, if any.

release data and meteorological measurements for estimating environmental deposition can provide additional help in the monitoring of routine and accidental releases of radioactive materials. A recent series of articles in Nuclear Safety presents a comprehensive review of techniques that may be used for estimating dispersion and deposition in the environment.[36-38]

Type of Samples Collected

The type and distribution of monitoring samples is mainly determined by the considerations noted above, the availability of samples, and the nature of the source material. The number and frequency of samples is also influenced by the type of sample, which may be collected at the point of release, during transport to the environment, at the point of deposition, in the food chain, or after ingestion by animals or humans.

There continues to be a great diversity of opinion on the types and the numbers of samples to be collected. At present the situation is much the same as described by one author in 1957: "standards of good practice have yet to be evolved."[32] Table V-1 represents one man's estimates of the number, the types of samples, and distribution of sampling locations needed around a nuclear power reactor facility. An example of the application of the philosophy reflected by Table V-1 is given in a report describing the preoperational environmental survey of the Enrico Fermi Reactor.[39]

Requirements of Speed and Accuracy

The dual objectives of speed in recognizing cases requiring immediate remedial action and of adequately representing long-term trends in gross area average conditions are not easily met with the same series of sample

type, frequency, and number. In many cases these objectives are approached separately by using what have been called "hysterical" and "historical" sampling procedures.

The requirement for speed usually is met by collecting samples from a limited number of locations on a very frequent schedule. Although this sampling method imposes a sacrifice of accuracy in representing either average or peak transient contamination levels, if the sampling net includes all the major points of release, monitoring experience can aid in correlating the results of the short-term release data with expected long-term buildup in the environment. It is in this application that the meteorologist can be of considerable assistance in advancing a routine surveillance program.

In the monitoring of long-term trends, freedom from requirements of rapid readout permits the collection of samples from a large number of locations. Thus, samples providing integrated averages of environmental conditions in a great many spots can be used to approximate gross area average contamination levels. However, time is an inflexible limitation in many monitoring situations. For example, in monitoring for I^{131}, the 8-day half-life restricts the time over which a sample may be integrated without incurring considerable error. Information on this error is given in Table V-2.

Summary

The problem of specifying a minimum adequate number of samples for monitoring a given situation is by no means a simple one. There is no easy, clearcut path to optimum sampling. Many groups begin by collecting

Table V-2 ERROR IN ASSUMING CONSTANT "AVERAGE" I^{131} CONCENTRATION DURING SAMPLING PERIOD[a]

I^{131} Sampling Period	Error (%) If All I^{131} on the Sample Had Been Collected at:	
	Beginning of Sampling Period	End of Sampling Period
1 day	-4.3[b]	+4.4[c]
1 week	-27	33
1 month	-79	181

[a]Note that the total range from maximum overestimate to maximum underestimate is 0.693 × (sampling time ÷ half-life) × 100, for any radionuclide where only radioactive decay is involved.

[b]Minus indicates underestimate.

[c]Plus indicates overestimate.

more samples than they can handle efficiently and then "optimize" the program by cutting back to a managable schedule within their budget and manpower limitations. Any attempt to plan a monitoring system on a rational basis must cut across many disciplines and, at any early stage, should include assistance from qualified professionals in various fields, including biology, health physics, meteorology, and reactor and chemical technology. In the final analysis, however, the selection of samples for environmental monitoring probably will be governed by factors of time, economy, and manpower. (B. R. Fish and H. H. Abee)

ENVIRONMENTAL CONTAMINATION AROUND NUCLEAR FACILITIES

The potential danger of radioactive materials to people living in the vicinity of nuclear reactors and fuel-processing plants has been recognized since the beginning of atomic-energy development. The realization of the danger, plus the need for secrecy in the early work, resulted in the acquisition of large exclusion areas around atomic-energy facilities. Consequently, except under extreme accident conditions, occupational exposure to plant personnel, rather than exposure of the public, is the major safety consideration. Fortunately, accidents have been few in number. The most notable was the 1957 Windscale fire and the most recent was the SL-1 incident,[40] which is still undergoing investigation. The need for an extensive reactor safety program to evaluate the extent of this danger, especially to people living near large power-producing reactors, has been discussed by Leverett.[41] Research on this subject is in progress in this country and abroad.

The nuclear facilities reviewed here are considered to be those sites having reactors large enough to produce significant quantities of fission products or those having processing equipment for used reactor fuels. This definition excludes from consideration a number of plants that handle only alpha-active materials, such as uranium, plutonium, and polonium. This distinction is made because, although such plants are certainly not free of hazards, the public, in general, could be much more affected by the beta- and gamma-emitters produced in reactors. This review also excludes small reactors operated for research or teaching purposes, mainly at universities. Some of these reactors produce small

quantities of radioactive effluents, but the amounts are not sufficient to be considered a major hazard.

Environmental Surveys

The principal source of information on environmental contamination around nuclear facilities directly under the control of the Atomic Energy Commission is the monthly journal Radiological Health Data issued by the U. S. Department of Health, Education, and Welfare, Division of Radiological Health, Public Health Service. Environmental contamination data from 18 Atomic Energy Commission installations are reported semiannually. The data are summarized in an easily understandable form, with sampling locations shown, and each issue usually contains, for reference, a table of applicable MPC values for various isotopes in air and water. Anyone desiring more detailed information of this type can usually find it in summary reports issued by the various installations.

The findings of nearly all the environmental surveys are so nearly uniform in regard to airborne contamination that there is no need to consider the reports individually. The introductory statement of the summary of a recent Hanford report[42] can be applied to the results of most of the studies at other sites with only the name changed. This reads, "An evaluation of results obtained from the Hanford environmental surveillance program for 1961 indicates that most of the environmental radiation exposure for the majority of persons in the neighborhood of Hanford project was due to natural sources and world-wide fallout rather than to Hanford operations." This report also indicates that the principal Hanford source of environmental exposure is the neutron-induced radionuclides present in reactor cooling water discharged to the Columbia

River. While few of the other sites have this particular problem, most of them do contribute significant quantities of radioactive materials to nearby streams. Storage tanks and basins are used to allow decay of short-lived activities, and the release rates to the streams are carefully controlled to keep the concentration of the biologically significant materials well below permissible limits. The stream-monitoring data simply indicate the effectiveness of the control measures being employed at the various sites. A recent quarterly report[43] contains data on the K^{40} content of Ohio River water, in addition to the usual alpha and beta activity figures.

Stack Monitoring

The above-mentioned low levels of airborne contamination around reactor sites do not, of course, indicate the absence of significant releases of radioactive gaseous and airborne particulate materials to the atmosphere. The data merely show that atmospheric dilution has reduced the concentration of these materials to a fraction of the permissible values before the released gases reach the monitoring stations, which are usually located outside the reactor site or near its perimeter. Quantitative information on the amounts of radioactive materials being discharged to the atmosphere can only be obtained from stack and duct monitoring data. All installations producing significant quantities of airborne radioactive effluents have stack and duct monitoring programs of varying degrees of effectiveness, but the data obtained and the information on sampling and measuring methods employed are apparently not readily obtainable even by workers in this field. Such information is

usually contained in reports not authorized for external distribution, possibly on the assumption that the quantities of radioactive materials being discharged would be frightening to the average person who did not have the background necessary for the proper interpretation of the data. Granting that there is no obvious need for the general public to have access to such information, it would still seem to be desirable to provide better means of interchange of information among the various sites having stack monitoring programs than exists at present. Some reports on monitoring techniques were reviewed in a previous issue of Nuclear Safety.[44]

Monitoring Programs of AEC Reactor License Holders

Some information on gaseous effluent monitoring and control practices at several reactor sites was obtained by the Division of Licensing and Regulation of the Atomic Energy Commission. A questionnaire sent to all nuclear reactor licencees had the following objectives, as stated in the cover letter:[45] to evaluate (1) the capability and accuracy of instruments used to measure selected radionuclides in gaseous effluents, (2) the possibility that significant concentrations of other nuclides may escape detection, and (3) the accuracy of the determination of the character and quantities of nuclides actually released. The replies to this questionnaire are presently available only in the Public Document Room of the Atomic Energy Commission headquarters building in Germantown, Maryland. The answers from six of the larger licensed reactor operators are summarized in Table V-3.

Many of the questionnaire replies indicated the existence of rather elaborate equipment for monitoring the small amounts of radioactive gases

Table V-3. ANSWERS TO AEC QUESTIONNAIRE ON GASEOUS EFFLUENTS

Question	GE – Test Reactor	GE – Vallecitos Boiling Water	Battelle Research Reactor	Yankee Reactor	Dresden	Westinghouse Test Reactor
Location of release points	Stack, 95 ft high	Stack, 70 ft high	4 stacks, 41 ft high, about 1200 ft from boundary	Vent stack, 149 ft high; incinerator stack, 36 ft high; both 1/2 mi from boundary	Stack, 300 ft high; 1/2 mi from boundary	Stack, 100 ft high, 1565 ft from boundary; coolant system vent discharge, 265 ft high, 1475 ft from boundary
Sources of effluents	Loop vents and containment cubicles; reactor vents and pool; experimental capsules and beam ports	Turbine air ejectors; pit coolers; loop offgas; miscellaneous	Various reactor experiments	Main coolant system	Turbine air ejectors and sealing gland exhausters; ventilating air	Ventilation air, process waste vent, and primary coolant system
Range and average values	Radioactive gases, ~8.5–21.2 μc/sec	Radioactive gases, 10–400 μc/sec; average 40 μc/sec	10^{-13} to 2×10^{-7} μc/ml	Waste disposal system, Xe^{133}, 10^{-6} to 10^{-5} μc/cm^3	Short-lived activity, 0.2–1.25 μc/ft^3, average 0.80; fission products, 0.13–1.3 μc/ft^3, average 0.55	Average activity of head tank vent discharge, 1.3×10^{-2} μc/cm^3
Provision for reduction of effluent concentration	Dilution	Dilution and decay	Filtration, dilution, and decay	Dilution and decay	Dilution plus 5-min holdup for decay	Filtration and dilution
Provision for storage of effluent	None	10-min holdup in large pipe for air-ejector gases; tank for SADE loop gas	Cooled, activated charcoal traps; 70 and 85 ft^3 holdup tanks	90-day storage in waste gas drums with 720 scf capacity at 60 psig	None	None
Monitoring points and instruments	Main exhaust duct, ionization chamber; stack, 20 ft above base-particulate filter and gas detector	Air ejector system and stack-ionization chamber; stack, β-sensitive Kanne ionization chamber	Monitoring performed at each experiment rather than at stacks	Air ejector and incinerator stack, beta-sensitive scintillation detector; primary vent stack includes Westinghouse FN207A stack gas detector	Air ejector and 2 sampling points with scintillation detectors; stack and scintillation detector	Exhaust from containment building, hot cell, and stack with particulate matter and gas β-sensitive monitors; head tank with Kanne ionization chamber
Unseen components	A^{37}, A^{39}, H^3	H^3	Possibly β-emitters	None mentioned	β- and α-emitters	None, but response to α-emitters is not calibrated
Total activity released, 4-1-60–3-31-61	525 curies, noble gases	80 curies, radioactive gases	0.85 curies radioactive gases	1.544 mc	1.8×10^3 curies of N^{13}; 2.4×10^3 curies of fission gases	73,760 curies
Isotope identity	Xe^{133} (42%); A^{41} (40%); Xe^{135} (15%); Kr^{85m} (3%); Kr^{85}, Kr^{88}, Xe^{133m}, Xe^{135m} in trace quantities	Xe^{138}, Kr^{87}, Kr^{88}, Kr^{85m}, Xe^{135}, and Xe^{133} = 80% of total; Kr^{83m}, Xe^{133m}, Xe^{131m} and Kr^{85} = <3%	Xe^{133} (670 mc); Xe^{135} (39 mc); Kr^{85m} (17 mc); Kr^{87} (1.3 mc); Kr^{88} (0.4 mc); A^{41} (114 mc)	Xe^{133}, Xe^{135}, Kr^{85}, and A^{41}	N^{13}, Xe^{133}, Xe^{135}, Kr^{85m}, Kr^{88}, Kr^{87}, and Xe^{138}	A^{41}, Kr^{85m}, Kr^{87}, Kr^{89}, Xe^{133}, Xe^{135}, and Xe^{138}
Variation of release rates	Xe^{133}, ±20%; A^{41}, +50%; Xe^{135}, ±5%; Kr^{85m}, ±5%		~1 to 10 mc/day	Irregular releases, <12 hr long; <200 hr total	Essentially steady release rate	Head tank vent maximum discharge, 1.25×10^{-2} curies/sec
Inadvertent releases	None	None	None	One, 2.6 ft^3 of gas containing 600 mc	None	One, fuel rupture released 261 curies of mixed fission products

produced. Information in the replies that may be useful, especially to those contemplating installing monitoring equipment, include data on the sensitivity of instruments employed for measuring the concentration of different gaseous and particulate activities, descriptions of alarms and control systems used in conjunction with the monitoring instruments, and maintenance experience with various instruments.

Monitoring equipment described by most licencees was supplied by various instrument manufacturers. Several mentioned use of moving filter-tape devices for the collection of particulate matter, which is certainly prefereable to the practice of changing particulate filters once a week, as reported by one operator. A gas detector reported in use at the Westinghouse Test Reactor before its permanent shutdown seems worthy of mention. It consists of a spherical chamber, 1 ft in diameter, coated on the inside with a beta-sensitive phosphor. A condensing lens focuses light from the phosphor on a photomultiplier tube. The sensitivity of the gas monitor for beta emitters is reported to be 4×10^{-8} $\mu c/cm^3$, while the sensitivity of the moving-tape particulate monitor that preceds the gas monitor is said to be 1×10^{-8} $\mu c/cm^3$ for beta emitters.

In addition to the information mentioned above, these questionnaire answers describe activity release points, including height above ground and distance from site boundary, sources of activity, range and average concentration of isotopes, provisions for reduction in concentration or removal of airborne radioactive materials, offsite monitoring, and amount of gaseous radioactive effluent discharged during the 12 months ending March 31, 1961. Monitoring instruments employed at several reactor sites did not furnish data on the range and average concentration of specific

isotopes. In some cases a distinction was made between short-lived activation products, such as A^{41} and N^{13}, and fission-product gases. Some reactor operators obviously could not supply a satisfactory answer to the question that pertained to the possibility of discharge of undetected activities, such as alpha and soft beta emitters. Very few sites have adequate monitoring programs for these types of airborne effluents. In some cases, occasional efforts to detect such activities were reported, while others simply discounted the likelihood for such releases on the basis of the nature of their sources.

The amounts of radioactive gases discharged during the 12-month report period showed a very wide range, from 1.544 millicuries (Yankee) to 73,760 curies (Westinghouse Test Reactor); but, in all cases, the actual stack gas concentrations were below allowable limits. Offsite monitoring activities were quite limited except at the General Electric Company Test Reactor, which reported 15 monitoring stations equipped with 0- to 10-mr ionization chambers, and the statement was made that 20 to 30 stations within a 5-mile radius of the site were planned as part of a program to relate total Vallecitos stack discharges to site perimeter limits. Reduction of particulate and gaseous discharge concentrations was effected in most cases by filtration and dilution. Limited use of gas holdup facilities to allow decay of short-lived activities was reported.

Contamination Around Fuel Processing Plants

Although much effort is being expended to develop methods for long-term storage of waste fission products, little information has been published recently on contamination around fuel-processing plants in

this country. A recent British publication,[46] however, discusses the problem of contamination resulting from the disposal of low-level liquid wastes from the Windscale plant in the ocean adjacent to the plant. It was found that the factor controlling the permissible rate of discharge of such waste material was the uptake of Ru^{106} by a species of seaweed consumed by people at a maximum rate of 2 1/2 oz per day. During the period 1959 to 1960, the effluent discharged contained an average total activity of about 8500 curies per month, but the introduction of a new treatment method in 1961 reduced the rate to about 5000 curies per month, and further processing improvements are expected to reduce the amount of activity released still further, in spite of a large increase in the amount of fuel to be processed.

A recently published bibliography[47] covers some reports of interest to workers concerned with environmental contamination around fuel-processing plants.

Summary

Data on airborne particulate and gaseous activities reported in Radiological Health Data indicate that the various AEC sites are having no particular difficulty in meeting the established limits for this type of radioactive contamination. Similar data obtained in stream-monitoring programs indicate that control methods being applied to aqueous waste discharges are likewise quite effective. Data on actual discharge rates for airborne effluents are not readily available, but some information of this type was obtained by the Division of Licensing and Regulation of the USAEC and can be obtained by interested parties. More general

dissemination of information on sampling and monitoring practices seems very desirable. Disposal of sizable quantities of low-level wastes in the ocean was reported to be routinely accomplished at the Windscale fuel-processing plant without exceeding personnel exposure limits. (C. J. Barton)

OPERATING PRACTICES IN CONTAMINATED CLOTHING LAUNDRIES

Most sites that handle radioactive materials have special laundries for protective clothing and other reusable items, such as towels, that may become contaminated. By the use of good safety and radiation protection practices, these laundries have accumulated many years of satisfactory operation. Good practices that are common to all sites include:

1. Protective clothing for operating personnel, including, in most cases, respirators for use in operations such as washer loading.

2. Constant air-sampling monitors.

3. Routine surveys for surface and personnel contamination.

4. Disposal of highly contaminated items by packaging and burial and segregation of wash batches below this level by type and extent of contamination.

5. Exhaust of drier air to atmosphere through a lint separator.

6. Monitoring of clean items for activity within established limits before permitting reuse.

7. Routine sampling of the waste water discharged.

The specific practices at Hanford, Chalk River, the National Reactor Testing Station, Savannah River, and the Oak Ridge National Laboratory are reviewed here to show the variations in details while following the common practices listed above. The prime differences are (1) the criteria for handling procedures, (2) the activity limits for reuse, and (3) the waste-water sampling and disposal methods. Each site operates successfully with its reported ground rules.

Hanford

Primary control is accomplished at Hanford[48] by surveying individual items and filled laundry bags prior to shipment to the laundry. The handling procedure is determined by the type and extent of contamination, as indicated in Table V-4. The special-handling bags are processed separately from the normally handled material to prevent cross contamination.

Table V-4. HANFORD HANDLING PROCEDURES EMPLOYED FOR VARIOUS CONTAMINATION LEVELS

Handling Procedure	Contamination		
	β-γ, mrad/hr	α from U only	Pu α, dis/min
Burial	>500		>20,000
Special	50–500	All levels	500–20,000
Normal	<50		<500

The activity limits for clothing that may be reused after washing and drying are given below:

Type of Contamination	Release Limit
Fission products, β-γ	1000 counts/min per 100 cm^2
Uranium, β-γ	3000 counts/min per 100 cm^2
Plutonium, α	1000 dis/min per 100 cm^2
Uranium not in equilibrium with its decay products, α	2000 dis/min per 100 cm^2 for rubbers and 1000 dis/min per 100 cm^2 for all other items

Any item not passing the release limit is rewashed. Any item still above the limit after three washes is discarded.

All waste water is discharged via a ditch to a low point on the ground surface, where it is allowed to evaporate or seep into the ground. Access to the ditch and the pond, or low point, is restricted by signs

and, in some locations, by chain barriers. Waste water in the ditch is sampled weekly. The average activities for the past year have been 7×10^{-9} and 1.4×10^{-7} μc/ml of alpha and beta, respectively.

Chalk River

At the Chalk River[49] laundry, large clothing items are individually monitored in a fume hood by passage through a slot viewed by a pair of 0- to 40,000-counts/min Geiger tubes. Bags of small items are monitored with a portable Geiger tube. The monitoring divides the material into batches according to the six categories listed in Table V-5.

Table V-5. CATEGORIES, ACTIVITY LEVELS, AND QUANTITIES OF CONTAMINATED CLOTHING LAUNDERED AT CHALK RIVER

Category	Activity, counts/min	Batches	Water Waste Activity, μc/liter
Disposal (burial)	>200,000	<1%	
Alpha	Not monitored	1 per month	
Offscale	40,000–200,000	1 per 10 days	
High	5000–40,000	3 per week	1.3
Low	500–5000	2 to 3 per day	0.08
Clean	0–500	2 to 3 per day	0.03

The dried clothes are passed through a slot viewed by a pair of 0- to 5000-counts/min Geiger tubes. All items, except laboratory coats and coveralls, must have no detectable activity before reuse. Laboratory coats may have up to 500 counts/min and coveralls up to 5000 counts/min, with any spot reading above 500 marked with a circle of green dye.

The laundry waste water, averaging 0.1 μc/liter, is normally discharged to the river via a 50-gal sampling surge tank. A special pit is available[50] for disposal of any unusually active waste, that is, a waste which could cause the maximum permissible concentration of activity in the river to be exceeded.

National Reactor Testing Station

Laundering is limited at the National Reactor Testing Station[51] to items contaminated to less than 500 mrad/hr with β-γ activity. The reuse limit is about 1 μc of β-γ activity per garment. Waste water is drained to a sewer system. Daily samples revealed a mean concentration for the year 1961 of 5.7×10^{-4} μc/ml. In the sewage plant, activity is partially removed by settling and by biological action. Solid wastes from the sewage plant are disposed of in a burial ground and the liquid effluent goes to a subsurface drain field.

Savannah River

Protective clothing contaminated to greater than 20,000 dis/min of α or 12 mrad/hr at 2 in. with β-γ activity are packaged and buried.[52] All items are monitored and bagged by the user, and the bags are monitored by Health Physics before being sent to the laundry. Separate wash lines handle clothing possibly contaminated with plutonium, neptunium, or fission products and clothing used in uranium handling and reactor facilities.

Reuse limits for washed and dried clothing are 1000 α dis/min per 100 cm^2 and 1500 β-γ counts/min per 100 cm^2. Waste water is sampled in a hold tank, and if the activity is below 100 α and 100,000 β-γ dis/min/ml, it is transferred to a seepage basin. More highly contaminated wastes,

which occur infrequently, are evaporated and the distillates are sent to the seepage basin and the residues to a waste storage tank.

Oak Ridge National Laboratory

All items contaminated above 50 mrad/hr, except plastic air suits, are buried.[53] Reuse of washed items is limited to those reading less than 0.75 β-γ mrad per 100 in.^{2} with no detectable α activity. Plastic air suits may be washed if they have up to 100 mrad/hr of activity; they are "hung on the line" to dry.

The waste water is discharged directly into White Oak Creek, which empties into the Clinch River. Routine checks on the activity content of the discharge to the creek reveal less than 1/10 of the MPC_w for contained contamination. The laundry operation costs less than 9¢/lb of material washed.

Summary

Each site reviewed follows all seven of the good safety and radiation practices cited. In operation at the different sites there is considerable variation in the contaminated material handling procedures, the reuse criteria, and the waste water disposal methods. A summary of these differences is presented in Table V-6. It is concluded that a laundry for contaminated clothing can be a safe operation. The discard of highly contaminated items before washing is a major feature of the procedure. (F. E. Harrington)

Table V-6. SUMMARY OF CRITERIA FOR CLOTHING CONTAMINATION AND WASTE WATER DISPOSAL LEVELS AT VARIOUS SITES

Site	Criteria for Contaminated Material Handling Procedure	Criteria for Reuse	Waste Water Disposal
Hanford	<500 mrad/hr β-γ, <2000 dis/min α; monitored before shipment to laundry	1000–3000 counts/min per 100 cm^2 of β-γ depending upon source; 1000–2000 dis/min per 100 cm^2 of α depending on source	Ground seepage
Chalk River	<200,000 counts/min β-γ; monitored at laundry	No detectable activity except on laboratory coats and coveralls	River via monitoring-diversion tank
NRTS	<500 mrad β-γ	~1 μc of β-γ per garment	Subsurface drain field via sewage plant
Savannah River	20,000 α dis/min or 12 β-γ mrad/hr at 2 in.	<1000 α dis/min per 100 cm^2 <1500 β-γ counts/min per 100 cm^2	Ground seepage via monitoring-diversion tank
ORNL	<50 β-γ mrad/hr	<0.75 β-γ mrad/hr per 100 $in.^2$; no detectable α	River

RUTHENIUM: A SPECIAL SAFETY PROBLEM

The possibility of volatilizing ruthenium as RuO_4 from an acid solution in the presence of a strong oxidizing agent during the chemical processing of irradiated fuel elements must be evaluated in hazards analyses. Ruthenium can be discharged from the cell ventilation or offgas system in the form of fine radioactive particles of RuO_2, which represent a serious contamination hazard because of the long half-life of Ru^{106}. The seriousness of the hazard is emphasized by the ease with which ruthenium moves through soil.

Amounts of Ruthenium Radioactivity Formed in Fission

The consequences of a ruthenium activity release can be best appreciated by noting the amounts of Ru^{103} ($T_{1/2}$ = 40 d) and Ru^{106} ($T_{1/2}$ = 1.0 y) present in a typical fission-product mixture. The relative amounts of the longer lived fission-product activities, as calculated from the data of Bruce,[54] for an irradiation time of 50 days and for various cooling times of up to 500 days are presented in Table V-7. The long-lived fission products Cs^{137} ($T_{1/2}$ = 30 y) and Sr^{90} ($T_{1/2}$ = 28 y), which are present in equal curie amounts in a typical fission-product mixture, were taken as unity to form the basis for comparison in Table V-7. Since cesium does not volatilize or precipitate readily from an aqueous solution of fission-product activities, it has been found in practice that one analysis for the Cs^{137} activity and one analysis of some other prominent fission-product activity (usually Ce^{144}) can be used in conjunction with this table to determine the age of the waste and to give an accurate picture of the fission-product composition of the waste. The values predicted

Table V-7. RATIO OF FISSION PRODUCTS TO Cs^{137} FOR VARIOUS COOLING TIMES AFTER 50 DAYS OF IRRADIATION

Isotope	Ratio of Fission Products to Cs^{137} for Indicated Cooling Times														
	25 days	50 days	75 days	100* days	125 days	150 days	175 days	200* days	225 days	250 days	300* days	350 days	400* days	450 days	500* days
Ce^{141}	109.8	60.9	36.5	21.5	12.7	8.2	4.65	2.75	1.62	0.98					
Ru^{103}	54.6	34.1	21.9	14.6	8.8	6.1	3.72	2.46	1.62	1.03					
Sr^{89}	82.9	37.6	39.9	29.4	21.1	15.2	11.0	8.12	5.90	4.18	2.22	1.14	0.61		
Y^{91}	92.7	68.3	53.7	39.2	29.4	22.0	16.6	12.8	9.35	7.37	4.05	2.35	1.29	0.74	
Zr^{95}	97.6	73.1	54.6	43.1	31.8	24.5	18.6	14.8	11.1	7.62	4.74	2.82	1.86	0.93	0.56
Nb^{95}	73.2	75.1	72.7	61.7	53.9	44.1	34.8	29.5	22.1	17.3	11.1	6.25	3.87	2.23	1.37
Ce^{144}	31.7	30.2	27.6	26.9	24.5	23.3	22.0	20.7	19.4	18.4	16.5	14.3	12.9	11.2	9.96
Ru^{106}	1.6	1.5	1.46	1.42	1.35	1.27	1.22	1.17	1.11	1.06	0.96	0.86	0.81	0.74	0.68
Pm^{147}	4.5	4.4	4.4	4.3	4.26	4.16	4.02	3.98	3.94	3.88	3.75	3.61	3.47	3.46	3.3

*Cs^{137} corrected for decay each 100 days.

for the other fission-product activities based on the Ce^{144}-to-Cs^{137} ratio are in good agreement with values determined experimentally.

As an example, it can be calculated that 3400 curies of Cs^{137} are formed per 1000 kg of fuel irradiated to a level of 1000 Mwd/MT. Table V-7 shows that in waste 150 days old, there would be 3400 × 23.3 = 79,200 curies of Ce^{144} associated with the 3400 curies of Cs^{137} activity. In addition, there would be 3400 × 6.1 or 20,500 curies of Ru^{103} and 4300 curies of Ru^{106}. At an age of 250 days, there would be 3600 curies of Ru^{103} and 3600 curies of Ru^{106}. These figures indicate that the volatility of ruthenium activity can be a major concern, even for relatively long-cooled fission-product wastes.

Further, the fission yield[54] of Ru^{106} from plutonium fission is greater by a factor of 12 than the fission yield of Ru^{106} from U^{235} fission (4.7% from Pu^{239} as compared with 0.38% from U^{235}). Hence, the factors for Ru^{106} in Table V-7 should be multiplied by 12 if plutonium fission has occurred. This increased amount of Ru^{106} activity can represent a potential hazard when such wastes are discharged to the ground,[55] since it has been observed that a substantial portion of Ru^{106} moves through the soil.

Chemical Properties of RuO_4

Volatilized ruthenium is most likely to be in the form of ruthenium tetroxide (RuO_4), the general properties of which have been documented.[56] In addition, the radiochemistry of ruthenium has been reviewed by Wyatt and Richard,[57] and there is extensive coverage of the literature of ruthenium chemistry in Nuclear Science Abstracts under the subject heading ruthenium.

Ruthenium tetroxide is an orange liquid that is readily soluble in water. It has about the same vapor pressure as water and is readily volatilized from acid solution by oxidizing one of the lower oxidation states of ruthenium with a strong oxidizing agent, such as $KMnO_4$, $NaBiO_5$, ozone, periodic acid, persulfate, bromate, or ceric ion. It reacts explosively with organic material and reacts rapidly with all metal surfaces to form finely divided RuO_2 particles.

Spent fuel rods are usually dissolved in nitric acid. A slight excess of $KMnO_4$ is maintained in the acid uranyl fuel solution, and Ru^{106} is removed by volatilization as RuO_4.[58] Within 5 to 10 min at 60°C, 70 to 80% of the ruthenium is volatilized into the offgas system. The use of excess $KMnO_4$ to volatilize ruthenium as RuO_4 was dropped shortly after a serious emission of ruthenium activity from the stacks at Hanford. This incident is discussed below in greater detail.

The oxidation of cerious (III) ion to ceric (IV) ion with sodium bromate, potassium permanganate, or persulfate is used to enable separation of cerium from the other rare earths. This will cause volatilization of RuO_4, if precautions have not been taken to remove ruthenium previously. Hydrogen peroxide, which accumulates as a radiation decomposition product in aqueous solution, has a protective effect in preventing the volatilization of ruthenium as the tetroxide. On boiling down hot strong nitric acid solutions containing ruthenium, however, it has been found beneficial to have reducing agents present, such as ferrous sulfamate or organic decomposition products. In nitric acid dissolution of hydrogen precipitates containing ruthenium, the addition of a small amount of reducing agent, such as hydrazine (0.05 M), is beneficial in maintaining a reduced form of ruthenium that is nonvolatile.

Incidents Involving the Volatility of RuO_4

(material submitted for declassification)

A release of about 3 curies of Ru^{106} in 1959 from a stack at the Oak Ridge National Laboratory has been reported.[62] The incident occurred shortly after replacement of a blower in the offgas system. Ruthenium, which had accumulated as RuO_2 in the metal offgas system, was loosened and discharged from the stack in the form of particulates when the high-speed blower was put into operation. The exact operation resulting in the volatilization of RuO_4 could not be determined, but because of the incident caustic scrubbers were installed on all offgas lines to individual buildings where there existed a possibility of ruthenium volatilization.

In both the and the ORNL incidents, reactivity of RuO_4 with metallic surfaces was the fundamental cause. In volatilizing RuO_4 in stainless steel equipment, the ruthenium material balance is generally very poor,[63] since it is found that 30 to 97% of the volatile ruthenium deposits on the walls as RuO_2. Many fine particles of RuO_2 are formed[64] that spread throughout the offgas system. Decontamination of the equipment is difficult because of inaccessibility, and since Ru^{106} has a half-life of one year, it can continue to be a potential hazard for years after it has been deposited in an offgas system.

Conclusions

The characteristics of chemical systems should be examined so that proper steps can be taken to reduce gaseous releases of ruthenium. Oxidizing agents favor the volatilization of RuO_4, while reducing agents keep ruthenium in a nonvolatile form.

Ruthenium should not be allowed to accumulate in offgas systems. If ruthenium activity is detected, the offgas system should be flushed with a weak caustic solution containing an oxidizing agent, such as potassium permanganate (0.5 N NaOH and 0.01 M oxidizing agent) or persulfate in order to remove any RuO_2 deposits.

Caustic scrubber solutions should be analyzed periodically for ruthenium activity. The presence of ruthenium activity in scrubber solutions is a danger sign that suggests alteration of the chemical procedures. (S. J. Rimshaw)

References

1. H. J. Gomberg, A Quantitative Approach to Evaluation of Risk in Locating a Power Reactor on a Given Site, Proceedings of the Second United Nations International Conference on the Peaceful Uses of Atomic Energy, Geneva, 1958, Vol. 11, pp. 57–65, United Nations, New York, 1958.

2. W. B. Cottrell et al., Environmental Analysis of N. S. SAVANNAH Operation at Camden, USAEC Report ORNL-2867, Rev. 1, Oak Ridge National Laboratory, January 24, 1961.

3. Code of Federal Regulations, Title 10, Part 100, Reactor Site Criteria; see also Federal Register, pp. 3509-3511, April 12, 1962.

4. J. J. DiNunno et al., Calculation of Distance Factors for Power and Test Reactor Sites, USAEC Report TID-14844, March 23, 1962.

5. F. A. Gifford, Jr., Atmospheric Dispersion Calculations Using the Generalized Gaussian Plume Model, Nuclear Safety, 2(2): 56–59 (December 1960).

6. W. F. Hilsmeier and F. A. Gifford, Jr., Graphs for Estimating Atmospheric Dispersion, USAEC Report ORO-545, July 1962.

7. F. Pasquill, The Estimation of the Dispersion of Windborne Material, The Meteorological Magazine, 90: 33–49 (1961).

8. F. A. Gifford, Jr., Use of Routine Meteorological Observations for Estimating Atmospheric Dispersion, Nuclear Safety, 2(4): 47–51 (June 1961).

9. W. P. Elliott, The Areas Within Concentration Isopleths Downwind of Continuous Point Source, Int. J. of Air Poll., 2: 115–126 (1959).

10. W. P. Elliott and P. W. Nickola, The Estimation of Areas Within Isopleths of Dosage Downwind of a Point Source, American Ind. Hyg. Assoc. J., 22: 238–244 (August 1961).

11. F. A. Gifford, Jr., Atmospheric Dispersion, Nuclear Safety, 1(3): 56–62 (March 1960).

12. J. Rosinski, Theoretical Dissertation of Diffusion and Deposition of Radio-Particulate Matter in Connection with Nuclear Powered Ships, Armour Research Foundation Report No. 1, ARF Project C119, 1958.

13. F. A. Gifford, Jr., Alignment Charts for Shape Parameters of Atmospheric Diffusion and Deposition Patterns, USAEC Report ORO-176, September 1958.

14. C. Vélez, Effect of the Height of the Source of Fission Products from a Small or Medium Power Reactor, Proceedings of the Conference on Small and Medium Power Reactors, Vienna, 1960, Vol. II, pp. 95–107, International Atomic Energy Agency, Vienna, Austria, 1961.

15. Y. Nishiwaka, On the Method of Estimation of the Population Dose, Population, and Surface Area Covered by the Diffusion of Radioactive Clouds, J. At. Energy Soc. Jap., 1(1): 1–23 (1959) (Translated as AEC-tr-4463).

16. Report of Committee II on Permissible Dose for Internal Radiation, International Committee on Radiological Protection Publication 2, Pergamon Press, London, 1959.

17. Maximum Permissible Body Burdens and Maximum Permissible Concentrations of Radionuclides in Air and Water for Occupational Exposure, NBS Handbook 69, National Bureau of Standards, U. S. Department of Commerce, June 5, 1959.

18. Background Material for Development of Radiation Protection Standards, Federal Radiation Council, Report No. 2, U. S. Government Printing Office, Washington, September 1961.

19. F. Duhamel and J. M. Lavie, Comment établir des Regles Pratiques pour Éviter la Contamination, Health Physics in Nuclear Installations, Risø Symposium, May 25–28, 1959, pp. 317–336, OEEC, ENEA, OECE, and the Danish AEC, 1959.

20. U. Greitz, Doses to the Gastrointestinal Tract from Ingestion of Fission Products in Drinking Water or Food, to be published in Health Physics.

21. W. G. Marley, Radioisotope Waste Disposal, Atom, 14: 23–29 (December 1957).

22. J. A. Williams and P. C. Davidge, Effluent at Windscale and the Effect of the Civil Power Programme, Atom, 68: 123–139 (June 1962).

23. D. L. Summers and M. C. Gaske, Maximum Permissible Activity (MPA) for Fission Products in Air and Water, Health Physics, 4(3/4): 289–292 (April 1961).

24. S. A. Beach, Calculations of the Maximum Permissible Concentrations in Air and Water of Certain Fission Product Mixtures, United Kingdom Atomic Energy Authority report AHSB(RP)R7, 1961.

25. H. Wyker, Some Remarks on the Maximum Permissible Concentration of Unidentified Radionuclides in Water and Related Disposal Formulae, Health Physics, 4(3/4): 309–311 (April 1961).

26. Report of Committee II on Permissible Dose for Internal Radiation, International Commission on Radiological Protection Publication 2, Pergamon Press, London, 1959.

27. Maximum Permissible Body Burdens and Maximum Permissible Concentrations of Radionuclides in Air and in Water for Occupational Exposure, NBS Handbook 69, National Bureau of Standards, U. S. Department of Commerce, June 5, 1959.

28. Background Material for Development of Radiation Protection Standards, Federal Radiation Council, Report No. 1, May 13, 1960.

29. Background Material for Development of Radiation Protection Standards, Federal Radiation Council, Report No. 2, September 1961.

30. Federal Radiation Council, Radiation Protection Guidance for Federal Agencies, Federal Register, pp. 9057–9058, September 26, 1961.

31. H. Blatz and A. Edelmann, Are Surveys Necessary?, Nucleonics, 17(1): 57 (January 1959).

32. G. H. Whipple, Pre-Operational Environmental Survey for a Power Reactor, American Industrial Hygiene Assoc. Quarterly, 18(4): 315–318 (December 1957).

33. C. A. Pelletier, Environmental Survey for Nuclear Facilities, Nucleonics, 17(1): 56, 58–59 (January 1959).

34. P. J. Barry, Planning an Environmental Survey for a Nuclear Power Plant, J. of the Air Pollution Control Assoc., 11(1): 14 (January 1961).

35. W. C. Reinig, The 1951 Preoperational Environmental Survey for the Savannah River Plant – in Retrospect, Abstract of Paper presented at the Health Physics Society Meeting, Chicago, Illinois, June 11–14, 1962. (Paper No. 36).

36. F. A. Gifford, Jr., Atmospheric Dispersion, Nuclear Safety, 1(3): 56–62 (March 1960).

37. F. A. Gifford, Jr., Atmospheric Dispersion Calculations Using the Generalized Gaussian Plume Model, Nuclear Safety, 2(2): 56–59 (December 1960).

38. F. A. Gifford, Jr., Use of Routine Meteorological Observations for Estimating Atmospheric Dispersion, Nuclear Safety, 2(4): 47–51 (June 1961).

39. J. V. Nehemias and G. H. Whipple, The Pre-Operational Environmental Survey for the Enrico Fermi Reactor – 1958, American Industrial Hygiene Assoc. Journal, 21(2): 144–150 (April 1960).

40. The SL-1 Accident, Nuclear Safety, 3(3): 64–74 (March 1962).

41. M. C. Leverett, Reactors, Sites and Safety, Nuclear News, 4(9): 15–20 (September 1961); see also, Nuclear Safety, 3(2): 1–4 (December 1961).

42. Evaluation of Radiological Conditions in the Vicinity of Hanford for 1961, USAEC Report HW-71999, General Electric Co., March 1, 1962.

43. Environmental Radiation Monitoring, Quarterly Report, First Quarter Jan.–Mar. 1962, USAEC Report TID-15632, Duquesne Light Company Shippingport Atomic Power Station.

44. Seventh AEC Air Cleaning Conference, Nuclear Safety, 3(3): 41–44 (March 1962).

45. R. Lowenstein, Acting Director of Licensing and Regulation, June 6, 1961.

46. J. A. Williams and P. C. Davidge, Effluent at Windscale and The Effect of the Civil Power Programme, J. Brit. Nuclear Energy Soc., 1(1): 14–27 (January 1962).

47. T. F. Connolly, Bibliography on Nuclear Reactor Fuel Reprocessing and Waste Disposal, Volume 4, Hazards and Protection, USAEC Report ORNL-2971, Oak Ridge National Laboratory, July 30, 1962.

48. C. E. Linderoth and G. A. Little, Contamination Control at the Hanford Laundry, USAEC Report HW-73654, General Electric Company, May 11, 1962.

49. W. R. Bush, Radioactive Hazards in the Project Laundry, letter to W. B. Cottrell dated June 5, 1962.

50. C. A. Mawson et al., Waste Management and Monitoring at Chalk River, Canadian Report CRL-59, November 1959.

51. B. L. Schmalz, Waste Disposal at the NRTS Laundry — General Description, letter to W. B. Cottrell, June 11, 1962.

52. H. L. Butler and C. M. Patterson, Laundering of Protective Clothing at the Savannah River Plant, USAEC Report DPSPU-62-30-20, E. I. du Pont de Nemours & Co., June 1962.

53. Personal Conversation, W. D. Buchanan and O. H. Sharp, July 1962.

54. F. R. Bruce et al. (eds.), Progress in Nuclear Energy, series III, Process Chemistry, McGraw Hill, New York, 1956.

55. K. E. Cowser, Potential Hazard of Ruthenium in the ORNL Waste-Pit System, USAEC Report ORNL CF-60-3-93, Oak Ridge National Laboratory, March 11, 1960.

56. Gmelins Handbuck der Anorganischen Chemie (8th ed.), System No. 63, Ruthenium, Verlag Chemie, Berline, 1938.

57. E. I. Wyatt and R. R. Rickard, The Radiochemistry of Ruthenium, Nuclear Science Series, No. 30, pt. 29, National Research Council, Washington, 1961.

58. D. G. Karraker and S. G. Parker, Evaluation of the "Reverse Strike" Head-end Procedure, USAEC Report DP-259, Savannah River Laboratory, December 1957.

59. (submitted for declassification)

60. (submitted for declassification)

61. H. G. Hicks et al., Laboratory Demonstration of Redox Feed Head-End Treatment. Ruthenium Volatilization and Manganese Dioxide Scavenging, declassified USAEC Report HW-22076, Hanford Atomic Products Operation, July 15, 1951.

62. Activity Releases at Oak Ridge National Laboratory, Nuclear Safety, 1(4): 83–88 (June 1960).

63. R. C. Feber et al., Large Scale Ozone Volatilization of Ruthenium, USAEC Report KAPL-367, Knolls Atomic Power Laboratory, Schenectady, New York, July 11, 1950.

64. W. E. Gill and D. E. Wisehart, A Study of Certain Properties of Ruthenium Compounds Found in the Redox Process, USAEC Report HW-32175, Hanford Atomic Products Operation, Richland, Washington, June 23, 1954.

VI. CURRENT EVENTS

SM-1 PRESSURIZED-WATER REACTOR OPERATING EXPERIENCE

J. M. Coombe*

Editors Note: This article is one of a series of articles describing the operating experience of particular reactors from the standpoint of reactor safety. It was prepared at the request of the editor by Mr. Coombe formerly of the Alco staff. No comprehensive survey of the operating experience of the SM-1 (formerly APPR-1) pressurized-water reactor has been published heretofore. The main sources of information for this reactor are the Hazards Summary Report of the Army Package Power Reactor SM-1, Task XVII[1] and subsequent hazards reports relating to changes to the reactor system.[2-12]

The objectives of the SM-1 were to prove the design of this type of reactor as a useful military power plant; to provide construction, operating, and cost data as a basis for planning similar plants in remote areas; and to provide a facility for training military crews to operate nuclear power plants in remote areas. It has been used at its site at Ft. Belvoir, Virginia, within the bounds of the Engineering Research and Development Laboratory, as the training reactor for the U. S. Army's pressurized-water reactor program. The system has also been used as a means of producing power and as a developmental and experimental device for acquiring information concerning the design of fuel elements, absorber sections, and various other reactor components.

---

*Mr. John Coombe received an undergraduate degree in physics from Washington and Jefferson College. After graduation he joined the General Electric Company physics program and subsequently the X-Ray Department and the Small Aircraft Engine Department, concurrently attending the graduate program in physics at Northeastern University. He then transferred to Technical Operations, Inc., where he was involved in the study of protection from fallout radiation. He then worked for Alco Products, Inc., where he was Head, Shielding and Hazards Unit, concurrently studying in physics and nuclear engineering in the graduate physics program at Union College. He is presently employed in the Astronuclear Laboratory of Westinghouse Corporation, and he is working on the NERVA project.

The SM-1 is a 10-Mw(t) pressurized-water reactor that has a net electrical output of 1925 kw. The fuel elements are plate-type UO_2–stainless steel dispersions with stainless steel cladding; they contain burnable poison in the form of boron in the fuel dispersion. The original control-rod absorber sections consisted of boron enriched in the B^{10} isotope in an iron dispersion with stainless steel cladding. These boron control rods were replaced at two-thirds core life with europium control rods.

The reactor operates at a pressure of 1200 psi with an outlet temperature of 450°F at full power. There are two primary coolant pumps in parallel, and either pump can provide the primary system flow rate of 3860 gpm. The water flows from the reactor to a steam generator, where the heat is transferred to a secondary (steam) system, and then returns to the reactor through the primary circulating pump. This entire primary loop is installed inside a vapor container 32 ft in diameter and 64 ft high. This enclosure can contain the energy released from the total steam inventory that would be generated on a postulated flashing of the primary and secondary system water volume when the amount of heat stored in these volumes was at its maximum.

Operating History

After construction in April 1957, the SM-1 was operated under an AEC contract by Alco Products, Inc.[13,14] Plant operation has since been assumed by the U. S. Army.

The SM-1 core 1 released 16.5 Mwyr of energy from the time of criticality on April 8, 1957, to April 28, 1960. The core was then rearranged

and some fuel elements with more uranium per were inserted. Core 1 then released an additional 1.6 Mwyr of energy before it was shut down on April 11, 1961 for core changeover. At the time of shutdown, core 1 still had available an estimated 1.1 Mwyr of energy. A summary report of physics measurements on the SM-1 core 1 is available in the literature.[15] Core 2 was installed in the SM-1 on June 2, 1961, and has since operated successfully. During this entire period, no significant operating time has been lost because of any drastic failure of the system itself. A number of malfunctions have occurred, however, which could have had serious consequences if they had not been discovered and corrected early. The serious malfunctions that could have compromised the safety of the plant are discussed in the following sections.

System Malfunctions

The core operated about 10.5 Mwyr before the vessel cover was removed and the core examined.[16] The examination was made because of concern that developed as a result of tests conducted at the Oak Ridge National Laboratory on the behavior of boron-iron absorbers. The physical examination disclosed that the cladding of the boron absorbers on four shim rods was severely cracked in the high-burnup region of these absorbers, even though no difficulty had ever been experienced in scramming the SM-1 reactor. The cracks were caused by the pressure of the helium gas formed in the following reaction:

$$ {}_5B^{10} + {}_0n^1 \rightarrow {}_5B^{11} \rightarrow {}_3Li^7 + {}_2He^4 \quad . $$

Because of the deterioration of the boron-iron control rods, europium

dispersed as Eu_2O in stainless steel and clad with stainless steel was used to replace five boron absorber sections of the control (shim) rods, even though no difficulty had been experienced in the scram movement.

When the vessel head was removed, two adjacent vessel head studs were found to be broken. A serious incident could have resulted if additional studs had failed. The breaks in the studs were determined to have been the result of stress-corrosion cracking. The original heat treatment for these type 410 stainless steel studs consisted of the following: (1) heat to 1750 to 1800°F, (2) hold 1/2 hr at temperature, (3) oil quench, (4) temper at 1000°F for 3 hr, (5) temper to 262 Brinell (26 1/2 R_c) hardness. An examination of the studs in the SM-1 after the failures indicated that the hardness ranged from 18 to 41 R_c.[17] A set of spare studs was tempered at 235 Brinell and installed in the SM-1 as replacement for the original studs.

During a subsequent rearrangement of the fuel elements, four control rod end caps were damaged as a result of improper cap-removal procedures.[18] Cap removal procedures were modified and expaned in order to preclude recurrences of such damage.

Other system malfunctions included a failure of the seat in the pressurizer relief valve that resulted in loss of water from the primary system. No difficulty was experienced in maintaining the water level above the core, however. Water lost from the system collects in the rod-drive pit and from that point is pumped to the waste storage tank. After the necessary holdup period, the water is then pumped to the river. The pressurizer relief valve was replaced with a flanged valve with a renewable seat that can be tested externally with air. The blowdown valve performance

has been erratic, and difficulty has been experienced in measuring the blowdown flow rate.

There have been numerous other malfunctions that have been successfully dealt with, such as a control-rod seal failure.[19] The short-time operation of the startup channels, because of the general radiation deterioration of the startup channel cable and detector, has been a continual source of concern. A lifting device, which is not yet operational, has now been installed on one of the two startup channels at the SM-1 to lift the detector out of the high neutron and gamma flux area after startup. It has recently been determined, however, that increasing the operating voltage to a true optimum resolved the problem of rapid detector failure. A pressurized leak test of the SM-1 vapor container has recently been accomplished. A few leakage paths were discovered and repaired, but complete analysis of the test results has not been completed.

Radiation Levels

There have been no over exposures associated with SM-1 reactor operation, and extreme caution has been exercised in keeping the radiation exposures of the operating personnel to a minimum. The highest exposures occurred during monitored equipment changes in the plant, and it was the health physicist doing the monitoring who was exposed. The highest exposure in the history of the SM-1 was caused by a radiographic source during construction of the plant.

The fission-product activities found in the SM-1 coolant during its operation have been minimal. The maximum coolant activity has been determined[20] to be between 0.6 and 0.8 $\mu c/cm^3$. Distributed long-lived fission products do not significantly contribute to after-shutdown radiation

levels, except in isolated locations in the primary system that serve as crud traps, such as the steam generator, where radiation dose rates approaching 1 to 5 r/hr on contact are experienced. After a series of radiation measurements in the rod-drive pit, it was believed that activation of the rod-drive components was taking place to a significant degree that could limit maintenance time. A later investigation indicated, however, that this was not the case and that the bottom control rod drives in this system were available for maintenance.

Failed Fuel Element

A prototype tubular fuel element that was installed for research and development studies failed in the SM-1 reactor. The first indication that was used for action was the fact that the primary coolant gross iodine activity had increased to more than 20 times the normal full power activity of 7.5×10^5 dpm/ml. A series of flux-tilting experiments was then conducted in order to determine which one of the fuel elements had failed.[21] This is a generally inaccurate operation in that only the quadrant of the core in which the failed fuel element is located is indicated; on the other hand, sampling the primary water expeditiously located the failed element.

The failed fuel element was replaced in the SM-1 core with a standard SM-1 element. A redesigned tubular fuel element of the same type as the failed one has since been supplied and is at present operating successfully in the SM-1 core. The defect of the original fuel element was a pinhole that permitted waterlogging of the element. The possibility of this occurring in the redesigned fuel element of this type was minimized.

The standard fuel elements have evidenced no failures to date other than cladding cracks that have released minor amounts of fission fragments. A test element (SM-2B) that was suspected to have been damaged was removed and transported to the Oak Ridge National Laboratory for examination. A hot cell examination at ORNL indicated that the suspected failure was only a series of superficial scuff marks on the surface of the side plates of the fuel element. This test element has subsequently been returned to the SM-1 facility. It was placed in the core in May 1962 for further operation. Other test elements in the core at the present time are operating successfully. These test elements consist in part of a graduated boron rod supplied by ORNL and two packages of material test elements. These material test elements contain reactor vessel material and are receiving integrated flux doses for subsequent examination of their nil ductility transition temperature by the Naval Research Laboratory in conjunction with the Army's pressurized-water reactor support and development program. A silver-cadmium-indium absorber section was fabricated and approved for insertion in the SM-1 core. It was inserted in May 1962.

ABNORMAL EVENTS IN THE OPERATION OF THE AE-6, WATER BOILER RESEARCH REACTOR

On December 20, 1958, and on March 25, 1959, two separate and independent incidents occurred in connection with the operation, by Atomics International, of the AE-6 Water Boiler Reactor at Santa Susana, California. The first incident was a power excursion to 4.5 kw, about twice the normal power level. The excursion was not accompanied by any activity release, and no abnormal radiation exposures to personnel were incurred. The second incident was a release of fission-product activity during a pumpdown of the gas system with the reactor shut down. Airborne contamination was spread within the building and on the personnel involved. No serious overexposure to radiation occurred and essentially no radioactive material was ingested or inhaled. Although both incidents were minor in terms of after effects, each pointed out certain deficiencies in the system and its operation that were subsequently corrected. They are reviewed here because of their interest to those concerned with nuclear safety.

Description of Reactor

The AE-6 is an aqueous-solution-fueled reactor designed to operate at a thermal power level of 2 kw at approximately room temperature and subatmospheric pressure. The reactor was originally built and operated by North American Aviation, Inc., at Downey, California, as the Water Boiler Neutron Source (WBNS) in 1952. The system was moved to Santa Susana and extensively modified in 1956 for operation as the AE-6. The major modifications included[22] (1) replacement of the core with one containing provisions for cooling the fuel solution and for expansion or overflow of

solution from the core, (2) provision of a refrigerated-water cooling system, (3) addition of a recombiner for the radiolysis products of water (this unit also serves to catch, and return to the core, the overflow mentioned in 1), (4) modification of the instrumentation, and (5) additional biological shielding.

The present system uses as fuel a solution of uranyl sulfate, fully enriched in U^{235}, in normal water. The spherical core (12 in. in diameter) is surrounded by a reflector of horizontally placed 4- by 4-in. graphite stringers which fill a 5-ft-diam by 5.5-ft-high steel tank. The four control rods (two safety rods and one coarse and one fine shim rod) operate in the reflector region.

The operating temperature of 70°F, or less, is maintained by circulating refrigerated water, entering at 40°F, through a coil immersed in the fuel solution in the core. Recombination of radiolytic gases is effected on the surface of plantinized alumina catalyst pellets in an electrically heated recombiner that is connected to the core vessel by a 2-in.-diam pipe. Gas transport from the core to the recombiner is by natural convection induced by condensation of the recombined water vapor on cooling coils in the recombiner. The operating pressure of the reactor depends on the power level but is limited to a maximum of 20 cm Hg absolute. The pressure at zero power with no unrecombined gas present is about 4 cm Hg absolute. The principal use of the reactor is as a neutron source for physics experiments by staff members of Atomics International.

Power Excursion

On December 20, 1958, as the power of the AE-6 was being leveled off at 2 kw, a transient occurred that raised the power in a period of

approximately 7 sec. The reactor was manually scrammed when the power reached 4.5 kw, which was less than the power for an instrument-initiated scram. After the occurrence, an investigation was carried out for determining the cause of the transient and for establishing methods of preventing future similar transients. The results of the investigation have been reported in detail.[23]

Cause of the Excursion. The investigation, which included analysis of a sample of the fuel, revealed that some of the uranium had precipitated as uranyl peroxide. It was therefore concluded that a resuspension of some of the settled precipitate was responsible for the excursion.

The critical control-rod position was not recorded on the day of the excursion because steady-state operation had not been reached. The last-recorded critical position (several days earlier) indicated, however, an available excess reactivity of only 0.12% δk/k, compared with 0.33% just after the last previous fuel change. Since burnup and fission-product poisons were low, this change indicated a significant loss of reactivity, probably from precipitation of fuel. Attempts to make the reactor critical several days after the transient were unsuccessful, indicating that futher precipitation had occurred, probably during the transient.

Some peroxide is always present in an aqueous homogeneous reactor because H_2O_2 is one of the intermediate products in the radiolytic decomposition of water. The peroxide decomposition rate is usually high enough, however, to prevent the concentration buildup required to precipitate uranyl peroxide. In general, the requirements for peroxide precipitation are high power and low temperature. Since the power density in AE-6 is not high, the low (70°F) operating temperature of the reactor

probably contributed most to the production of unstable conditions. The precipitation in AE-6 appears to have been a very slow process, suggesting that the reactor was only rarely operated under unstable conditions but that normal operation was very close to the limit of stability.

Remedial Actions. Since uranyl peroxide decomposes readily at elevated temperatures, the precipitate in AE-6 was dissolved by warming and agitating the contents of the core vessel. Warm water was circulated through the cooling coil in the core to raise the temperature, and a helium sparge was used for agitation. The minimum stable fuel temperature can be significantly reduced by the use of additives that accelerate the peroxide decomposition rate. One such material is ferrous iron, and a quantity of ferrous sulfate was added to the fuel solution. These treatments were successful in decomposing all the precipitate and recovering the "lost" reactivity.

As a precaution against future incidents associated with fuel precipitation, the iron concentration in the fuel is maintained at about 200 ppm, and daily measurements are made of the available excess reactivity. A permanent system has been installed to permit heat treatment of the core in the event that reactivity losses are detected. In addition, a multipoint recorder has been installed to provide a continuous record of the core temperatures as a check against operating at abnormally low temperatures.

Activity Release

The activity release[24] that occurred on March 25, 1959, was in connection with a relatively nonroutine operation while the reactor was shut

down. About 4 hr prior to the release, the reactor was raised to a power level thought to be 2 kw. (It was learned later that, because of a faulty instrument, the power was actually about 4 kw.) The system pressure began to rise immediately, however, because of failure of the recombiner to recombine all the radiolytic gas, and, after about 1 min, the reactor was automatically scrammed by the pressure signal. The recombiner failed to reduce the pressure satisfactorily after the shutdown, so it was decided to pump out the reactor system to obtain a sufficiently low pressure for power operation. Although the normal procedure required that at least 12 hr elapse after the last operation of the reactor before evacuation of the system, the process was started after only 4 hr in an effort to meet the run schedule.

The system evacuation* was accomplished with the aid of one or more evacuated tanks connected sequentially to a manifold that had other connections to the reactor, a vacuum pump, and a manometer. (Access to this equipment required the removal of part of the biological shield.) After connecting a tank, the tank and the associated piping (up to the valves at the reactor system) were further evacuated. The vacuum pump was then isolated and turned off (normally). Gas from the reactor system was then drawn into the tank until the desired pressure was obtained. A final tank was used to remove residual gases from the manifold.

On the occasion in question, the entire operation was hampered by a high level of radiation (5 r/hr 6 in. from the recombiner) in the work area because of the short time that had elapsed since the reactor shutdown.

---

*This description refers to the system and procedure that were in use at the time of the incident. Both have since been changed.

Continuous radiation monitors were not used in the immediate work area, however, and the air activity was not monitored. The nearest radiation monitor was on a wall of the reactor room more than 15 ft away, and it was partly shielded from the work area.

During the pumpdown operation, the vacuum pump was inadvertently left running, although valved off, while the reactor and vacuum tank were interconnected. It was noted that the reactor system pressure went lower than had been expected with the use of only a single vacuum tank, but the significance of this fact was not appreciated until later.

The existence of radioactive contamination was not discovered until the pumpdown operation was complete and the reactor shielding was being replaced. At that time contamination was found on the four persons involved and in the reactor room. Most of the activity was short-lived and the personnel and equipment were decontaminated without much difficulty. Subsequent tests and analyses showed that no significant amount of activity had been ingested or inhaled by the personnel, and no overexposure had been incurred.

Causes of the Release. Equipment checks after the release showed heavy contamination of the vacuum pump oil with short-lived activity. This led to the conclusion that the valve isolating the pump had leaked and that the pump had spread the activity. The leaking valve also accounted for the unusually low pressure that was achieved in the pumpdown. Although the combination of leaving the pump running and the leaky valve were directly responsible for the activity release, a number of other factors contributed to the incident.

1. The failure to wait the prescribed 12 hr before starting the pumpdown left an abnormally large amount of activity available for release.

2. The lack of adequate monitoring equipment prevented the detection of the release at an earlier stage.

3. The fact that the recombiner failed to reduce the system pressure made the entire sequence possible by providing the need to evacuate the system.

4. The apparent haste with which the operation was performed, because of time schedule and radiation level, probably also contributed to the incident.

Remedial Measures. A number of changes in equipment and procedures have been made which will help to prevent the recurrence of this type of activity release. Most of the changes were made as a direct result of this incident, but at least one, the replacement of the recombiner, had only an indirect bearing on the release. The directly related changes are mentioned in the report of the incident.[24] Additional detailed information, including actual procedures and equipment changes, is presented in the operating manual[25] and safeguards summary,[26] both of which were issued later. The following list summarizes the changes.

1. The pumpdown system was modified so that the discharge of the vacuum pump is collected in a pre-evacuated tank.

2. A delay time of at least 15 hr between reactor operation and system pumpdown had been adopted.

3. The radiation level 6 in. from the recombiner must be less than 300 mr/hr before a pumpdown operation is started.

4. Personnel carrying out the pumpdown are required to wear protective clothing.

5. Adequate radiation and air monitoring must be in operation during the pumpdown.

6. A detailed written procedure was adopted for use in the operation.

7. The recombiner was replaced by a unit that can be heated to a higher temperature and thus ensure dryness of the catalyst and better recombination performance to reduce the frequence of pumpdowns. (J. R. Engel)

BOOK REVIEW: NUCLEAR POWER SAFETY ECONOMICS

Nuclear Power Safety Economics, Saul J. Harris; Pilot Books, 1961; $3.00.

The stated purpose of the book is to present an analysis of health and safety costs associated with the design, construction, and operation of nuclear power plants. Such an analysis, it is hoped, will point the way toward methods of reducing power costs without sacrificing safety. Unfortunately, because of the transient nature of nuclear power economics and an inadequate understanding of nuclear power technology by the author, the analysis falls far short of achieving its objective.

The book is divided into 16 chapters, the first four of which are aimed at providing background information and defining the problem of radiation protection. Some benefit from this introductory material might be derived by one completely unfamiliar with the technical aspects of nuclear power production; however, much of the discussion is highly inaccurate and misleading. Uninformed readers, for example, will be mislead by the statements on page 7 that "any configuration which results in reactivity less than 1.000 dollar is considered subcritical" and "any reactivity above 1.000 is excess and can be used to perform useful work." Such statements, though amazing, can be easily corrected; therefore, these do not in themselves impair the main purpose of the introductory chapters. A more serious criticism that can be applied is that the author never clearly defines what the problem of safety versus economic power really is. Briefly stated, the primary problem that confronts reactor designers is a lack of knowledge of the number of successive physical barriers and protective devices that must be utilized to prevent the accidental release

of radioactive material and the economic consequences of removing those that are unessential. Having once defined the problem, the author should then have described the physical barriers (i.e., fuel cladding, primary system piping, reactor shield, and containment vessel) and the protective devices. This would naturally lead to the analysis of costs of individual safety measures to provide an indication of their influence on over-all power costs.

The second area of information covered in the book by Chapters V through XI deals with the engineering considerations for safety. For this section the author draws heavily on two reports published by Westinghouse, "Description of the Shippingport Atomic Power Station," WAPD-PWR-970, and "PWR Hazards Summary Report," WAPD-SC-541. Thus, the treatment is limited to a single reactor system and a plant design that represents an early stage of nuclear power technology. No attempt is made to show how the results might be more generally applied, and therefore the usefulness of the information is open to question. Rather than describing a specific reactor, it would have been better had the author discussed reactor design and safety in more general terms. For example, Chapter V, Core and Fuel Element Design, might preferably have reviewed factors such as type of fuel, degree of burnup, temperature, cladding material, cladding thickness, etc., which affect both the ability of the fuel to retain fission products and the performance of the system. Such a general treatment of the safety and economics of fuel elements and core designs would provide a better insight to the question of how much effect the design has on cost.

The last five chapters cover the subject of power reactor economics and attempt to show what portion of nuclear power costs can be attributed

to reactor safety considerations. The point is well made that a significant fraction of nuclear plant costs arises from the need to protect people from radiation. What is lacking here is a differentiation of safety measures which might conceivably be eliminated or minimized as a means of reducing costs from those vital to the safe operation of the system. For example, elimination of cladding is suggested by the author as one of the possible means of minimizing health and safety costs, yet no mention is made of the possible impact of such a design change on the behavior, performance, and costs of the resulting nuclear power system. Similarly, continuous fission-product removal and disposal are pointed out as a possible approach to economic power without alerting the reader to the pros and cons of such a mode of operation.

By bringing to light the importance of recognizing the economic significance of health and safety factors early in the design of nuclear plants, the author provides a valuable service for the nuclear power industry. A refinement and expansion of this theme along the lines suggested does, however, appear to be in order. (J. A. Lane)

CHANGES IN LICENSING REGULATIONS

AEC rules and regulations, as found in Title 10, Code of Federal Regulations, Chapter 1, are frequently amended. Among those now being considered for change are Part 9, Public Records; Part 30, Licensing of By-Product Material; and Part 50, Licensing of Production and Utilization Facilities. The various amendments along with Part 150, Transfer of Regulatory Authority, are discussed below.

Part 9, Public Records

The AEC received a favorable comment from an AFL-CIO staff committee on an amendment to Part 9 proposed on January 26, 1962.[27] The amendment would provide that notices to licensees of alleged violations and correspondence between the AEC and licensees concerning alleged violations be made public.[28,29] The AFL-CIO felt that the changes would be in the interest of labor and the general public. They also favored coverage by Part 9 of utilities that participate in the power reactor demonstration program.

Part 30, Licensing of By-Product Material

Comments continued to be received by the AEC on a proposed amendment to Part 30 that was published in the Federal Register of January 18, 1962.[27,28,30-32] The amendment would exempt from licensing certain radioisotopes for medical use. There was general agreement with the intent of the proposal; that is, the promotion of wider use of the radioisotopes. Over one-half of those commenting, however, continued to be opposed to the amendment. It was felt that the average medical practitioner

had no special training in the application of radioisotopes. Much of the opposition came from those in the medical profession.

Part 50, Licensing of Production and Utilization Facilities

On June 9, 1962, an amendment to Part 50 that would clarify the extent to which reactor licensees may make changes in the design or operation of their facilities and conduct tests and experiments was published in the Federal Register.[33] It became effective 30 days after publication.

The amendment included an Appendix A designed to provide guidance to licensees and applicants. The appendix contains a list of items typical of those the AEC would generally expect to be covered by technical specifications in operating licenses.

The AEC, in conjunction with adoption of the amendment, delegated appropriate authority to the staff to determine whether proposed changes, tests, or experiments involve significant hazards considerations not described or implied in the hazards summary report. The staff was also granted authority to approve changes that are not required to be submitted to the ACRS and to public hearing.

Part 150, Transfer of Regulatory Authority

An agreement between the State of Mississippi and the AEC transferring regulatory authority to the state went into effect on July 1, 1962.[34] The agreement was similar to those previously signed with Kentucky and California.[28] It covered authority with respect to rule making and licensing and regulation of radioisotopes, source materials, and small quantities of fissionable materials.

At the same time that the Mississippi agreement was announced, the AEC replied to the AFL-CIO concerning their objections to the agreement. The Union objection, filed with the AEC on May 4, was based on the alleged poor record of Mississippi in worker safety.[35] The AEC, in its reply, indicated that it was satisfied with the adequacy of the State program and that the technical personnel of the State radiation group have adequate background and training to meet the AEC criteria.

(J. R. Buchanan)

ACTION ON REACTOR PROJECTS BY LICENSING AND REGULATING BODIES

The AEC is required by the Atomic Energy Act of 1954 to protect the health and safety of the public from undue hazards relative to the operation of nuclear facilities. Regulations that are followed to ensure that this responsibility is fulfilled while furthering the simultaneous responsibility for developing the use of nuclear energy are published in the Code of Federal Regulations. Title 10 of the Code requires the AEC to make certain specific findings regarding the safety of the public before issuing either a construction permit or an operating license for a facility. It also requires authorization for changes in facility equipment or operation that contain an element of hazard not previously reviewed or approved. The license application record of various power reactors is reported in Table VI-1. Recent actions and activities relative to specific reactors are described below.

Big Rock Point Reactor (Docket 50-155)

The ACRS on June 30, 1962, expressed the opinion that the Big Rock Point boiling-water reactor could undertake its proposed initial operation up to a maximum power level of 157 Mw(t) without undue risk to the health and safety of the public.[36] Included in the proposal was an amendment to the license application that would permit maximum heat flux limits of the reactor to be increased from 460,000 to 510,000 Btu/hr·ft^2. This would increase the maximum fuel rod power from 13.6 to 16.6 kw/ft. Fuel assembly irradiation in a test reactor indicated that the increases were acceptable. The amendment would also permit the core size to be increased later from an initial size of 56 fuel bundles to 78. The maximum power level limit would remain at 157 Mw(t).

Table VI-1. CALENDAR OF LEGAL STEPS IN LICENSING U. S. POWER REACTORS

REACTOR INFORMATION					CONSTRUCTION PERMIT					OPERATING LICENSE				CURRENT STATUS
CODE NO.	NAME OWNER AND OPERATOR LOCATION	REACTOR TYPE	AUTHORIZED POWER		ACRS APPROVAL	HEARING EXAMINER APPROVAL	CONSTRUCTION PERMIT		ACTUAL OR SCHEDULED COMPLETION DATE	ACRS APPROVAL	HEARING EXAMINER APPROVAL	AUTHORIZATION TO OPERATE		
			Mwt	Mwe			NO.	DATE				NO.	DATE	
50-155	**BIG ROCK POINT** Consumers Power Co. Charlevoix County, Michigan	Boiling Water	157	47.8	Mar. 1960	May 1960			1962					Under construction
	BODEGA BAY Pacific Gas & Electric Co. Bodega Bay, Calif.	Boiling Water		324					1965					
PP-4	**BONUS** USAEC Puerto Rico Water Resources Authority Rincon, Puerto Rico	Boiling Water Nuclear Superheat	50	16.3	Mar. 1960	June 1960	Not Required		Sept. 1962			Not Required		Final hazards summary report filed in Feb. 1962
None	**BORAX-V** USAEC Argonne National Laboratory NRTS, Idaho	Experimental Boiling Water, Nuclear Superheat	35.7	2.7			Not Required					Not Required		Achieved criticality in Feb. 1962
50-144	**CVTR** Carolinas-Virginia Nuclear Power Associates Parr, South Carolina	Pressurized D_2O Moderator and Coolant	60.5	17	Dec. 1959	Apr. 1960	CPPR-7	5-4-60	Dec. 1962					Plant to be ready for fuel loading in late 1962
50-10	**DRESDEN** Commonwealth Edison Co. Grundy County, Illinois	Boiling Water	630	192 gr 180 net			CPPR-2	5-4-56	Sept.1959	May 1959	Sept. 1959 May 1961	DPR-2	9-26-59 11-16-59 6-2-60 10-14-60 6-9-61	Initially critical Oct. 1959
PP-1	**ELK RIVER** USAEC Elk River Rural Cooperative Power Association Elk River, Minnesota	Boiling Water Thorium Converter	58.2	22	Aug. 1959	Dec. 1959	Not Required		Jan. 1962					Pressure-vessel defects are under investigation
None	**EBWR** USAEC Argonne National Laboratory Argonne, Illinois	Experimental Boiling Water	100	4.5			Not Required					Not Required		Operating since Dec. 1956
None	**EBR-II** USAEC Argonne National Laboratory NRTS, Idaho	Experimental Breeder Fast Neutron Spectrum Sodium Cooled	62.5	16.5			Not Required					Not Required		Startup planned in 1962
None	**EGCR** USAEC Tennessee Valley Authority Oak Ridge, Tennessee	Experimental Graphite Moderated Helium Cooled	84.3	22.3	May 1959		Not Required		Dec. 1962			Not Required		Under construction
F-16	**FERMI** Power Reactor Development Co. Detroit Edison Co. Monroe County, Michigan	Fast Neutron Spectrum Plutonium Breeder Sodium Cooled	200	60			CPPR-4	8-4-56 12-10-58 5-26-59	Sept. 1962					Precritical testing is under way
PP-3	**HALLAM** USAEC Consumers Public Power District Hallam, Nebraska	Graphite Moderated Sodium Cooled	240	76	July 1959 Feb. 1960	June 1960	Not Required		July 1962	Feb. 1962				ACRS approved operation up to 15 per cent of full power

Table VI-1 (continued)

50-133	HUMBOLDT BAY Pacific Gas & Electric Co. Buhne Point, California	Boiling Water	163	48.5	June 1960 July 1960	Oct. 1960	CPPR-10	11-9-60	Aug. 1962	Apr. 1962				Provisional ACRS operating approval given
50-3	INDIAN POINT (CETR) Consolidated Edison Co. of New York Buchanan, New York	Pressurized Water Thorium Converter	585	275 gr 255 net		Final Design June 1961	CPPR-1	5-4-56	Apr. 1962	Nov. 1961	Feb. 1962		Mar. 1962	Planning startup
	LA CROSSE USAEC Dairyland Power Cooperative Genoa, Wisconsin	Boiling Water	165	50					1965					Under design
None	N. S. SAVANNAH USAEC States Marine Lines Constructed at Camden, New Jersey	Pressurized Water	69	22,000 shp			Not Required		Dec. 1961	Dec. 1960	June 1961	Not Required		Criticality achieved in Dec. 1961, full power in Apr. 1962
50-130	PATHFINDER Northern States Power Co. Sioux Falls, South Dakota	Boiling Water Nuclear Superheat	203	66	Feb. 1960	Apr. 1960	CPPR-8	5-12-60	Apr. 1962					Initial criticality tentatively scheduled for Nov. 1962
50-171	PEACH BOTTOM Philadelphia Electric Co. York County, Pennsylvania	High Temperature Unclad Fuel Graphite Moderated Gas Cooled	117	40	Nov. 1961	Feb. 1962		2-23-62	Mar. to Dec. 1964					Under construction
PP-2	PIQUA OMR USAEC (Reactor) City of Piqua Municipal Power Commission Piqua, Ohio	Organic Cooled and Moderated	45.5	11.4	July 1959	Jan. 1960	Not Required		Oct. 1961	May 1961				Provisional operating authorization hearing early in 1962
None	PWR USAEC Duquesne Light Co. Shippingport, Pennsylvania	Pressurized Water	231	68 gr 60 net	Jan. 1954		Not Required		Nov. 1957	Nov. 1957		Not Required		Operating since Dec. 1957
50-146	SAXTON Saxton Nuclear Experimental Corporation Berks County, Pennsylvania	Pressurized Water	20	3.2	Sept. 1959	Jan. 1960	CPPR-6	2-11-60	Jan. 1962	July 1961	Oct. 1961	DPR-4	11-15-61	ACRS approved startup program including operation up to full power. Initial license is provisional.
None	SRE USAEC Atomics International & Southern California Edison Santa Susana, California	Graphite Moderated Sodium Cooled	20	6			Not Required					Not Required		Operating since Apr. 1957
50-18	VBWR General Electric Co. Alameda County, California	Test Reactor Boiling Water	50	5			CPPR-3	5-14-56				DPR-1	8-31-57	Operating since Sept. 1957
50-183	VESR General Electric Co. Alameda County, California	Light Water Moderated, Separate Steam Superheater	12.5		May 1961	July 1961		8-10-61	Apr. 1962 to Feb. 1963					Under construction
50-29	YANKEE (YAEC) Yankee Atomic Electric Co. Rowe, Massachusetts	Pressurized Water	485	141	Sept. 1957		CPPR-5	11-4-57	July 1960	Feb. 1960 May 1960 June 1960	April 1960 July 1960 June 1961	DPR-3	7-9-60 7-29-60 6-23-61	Operating since Aug. 1960

Consumers Power Company, the reactor owner, also reported to the ACRS on the manufacturing test program for the control rod drives. During the program certain repeated abnormal scram tests were found to be capable of causing damage to an internal tube. While the deficiency was not expected to occur during normal use, it did require certain structural modifications in the drive. Tests on the modified drive indicated that the design changes were acceptable.

An earlier report of the ACRS on May 12, 1962, discussed the reactor shutdown margin in terms of control rod positions. A shutdown margin of 0.3% $\delta k/k$ with the rod of greatest reactivity worth fully withdrawn was requested.[37] The applicant was also asked to be able to demonstrate at all times, either by experiments or calculations, that this criterion is being met. It was the belief of the ACRS that "it should be demonstrably possible to shut down any reactor at any time in core life with the most important control rod fully withdrawn and in any normally achievable condition."

On July 10, at a public hearing in Germantown, the AEC recommended that a provisional 18-month license be issued to Consumers Power Company.[38] At the request of the applicant it was recommended that the initial power operation (for a 6- to 8-week period) not exceed 1 Mw(t). The AEC staff pointed out that this provision did not really deal with safety and that its relation was to the indemnity in case of an accident. The applicant showed that it would save sufficient money to warrant the provision by only carrying the amount of insurance appropriate to the 1-Mw(t) power level during low-power testing.

Carolinas Virginia Tube Reactor (Docket 50-144)

The AEC on May 29, 1962, requested further information on some 55 points concerning the operating license application of the heavy-water-moderated Carolinas Virginia tube reactor.[39] The request was acknowledged by resubmitting revised technical specifications for the reactor on July 11.[40] The AEC scheduled a public hearing for August 28 to consider issuance of the license.[41]

The ACRS on July 5 expressed the opinion that the reactor can be operated up to a power level of 44.3 Mw(t) as proposed without undue hazard to the health and safety of the public. The ACRS commented as follows:[42]

> "The reactor is of unusual design principally because it incorporates heavy water, as both coolant and moderator, and U-shaped zircaloy-4 pressure tubes. The applicant has indicated that degradation of D_2O by H_2O will result in a gradual transition of the negative temperature and void coefficient of reactivity in a positive direction. This does not appear to be a safety problem, since the applicant has stated that no H_2O supplies will be accessible to the D_2O system except in the heat exchanger, since the system should be unusually leak tight and operated always at a higher pressure than the secondary H_2O system, and since the applicant has stated that he will replace the D_2O when it becomes 2% degraded.
>
> "The applicant intends to utilize some control rods whose absorber sections are composed principally of boron stainless steel. A group of these rods will be subjected to a relatively high integrated neutron flux. The applicant has submitted evidence indicating that the predicted radiation damage should not significantly affect this material. This information, coupled with the applicant's stated intent to examine these rods periodically and well before any problems could develope, causes the Committee to believe that use of this material will not result in any significant hazard.
>
> "The applicant has presented extensive information on the expected performance of zircaloy-4 under the proposed conditions. The Committee believes that no safety problem should arise from the use of this material.

"The planned procedures for the dry loading of the core and subsequent introduction of D_2O do not appear to create a hazard."

Dresden Reactor (Docket 50-10)

On July 5, 1962, the ACRS reported on Commonwealth Edison Company's request to make changes in the technical specifications for the boiling-water Dresden reactor.[43] The changes were requested so that the reactor power output would not be restricted to less than authorized due to fuel burnup.[44] The ACRS felt that the maximum power limit could satisfactorily be increased from 630 to 700 Mw(t) but that the heat flux for the several types of fuel should be limited to certain lower values than the applicant had requested. They question the advisability of taking very large experimental steps in a reactor which is primarily devoted to demonstrating power operation. The ACRS suggested that the Big Rock Point boiling-water reactor will be operated primarily as a research and development facility for testing the possibilities of high specific power operation, thereby making it unnecessary to use the Dresden reactor for this purpose.

The AEC scheduled a public hearing for August 8 to consider issuance of a license amendment to cover the specification changes proposed by Commonwealth Edison.[43] On July 5 Edison changed its request to agree with the recommendations of the ACRS.[40]

In February 1962 Edison advised the AEC that some employees were refusing to sign their certificates of exposure as required by the AEC.[44] After consideration of the matter and consultation with the union (IBEW Local No. 1460) involved, the AEC on June 7 advised Edison of their

conclusions.[45,46] They felt that the Company was not complying with Part 20 of the Code of Federal Regulations relative to the radiation certificates required on Form AEC-4 (or an alternate clear and legible record). In order to comply with Part 20, the AEC felt that in the future Edison should be quite specific about any exemption they seek and should submit a certification to the effect that:[46]

> "... the information contained in the submitted forms (or alternative records) is correct and complete to the best of your knowledge and belief; and the individual employees covered by the submitted Forms (or alternative records) were given an opportunity to sign the Forms (or alternative records) and refused to do so; and to the best of your knowledge and belief such refual on the part of the employees was not based on objectives to the correctness and completeness of the information contained in [parts] of the Forms (or alternative records); and copies of the forms (or alternative records) and your certification have been furnished to the individual employees."

Edison, on July 20, agreed to sign the indemnity agreement for the Dresden reactor.[40] They had earlier objected on the grounds that they were reluctant to execute an agreement containing a provision that would allow the AEC to unilaterally withdraw protection.[36] The AEC explained that they could not contract away "the right of Congress to legislate or the Commission to adopt appropriate rules, regulations or orders in the future."[47] It was also pointed out that the licensee did not waive its right to object to changes in its indemnity agreement. Fourteen other companies have executed indemnity agreements containing the disputed provision.

Elk River Reactor (Docket 115-1)

The ACRS on May 26, 1962, expressed the opinion that the 58-Mw(t) boiling-water Elk River reactor can be operated without undue risk to

the health and safety of the public provided certain restrictions on the pressure vessel are met. The restrictions are:[48]

> "It is understood that initial pressurization of the vessel will not be undertaken below the NDT + 60°F; that there will be yearly NDT temperature determinations made on representative irradiation surveillance specimens to establish NDT shifts; that thermal sleeves are being installed on the 8" nozzles; that heating and cooling will be limited to a rate not to exceed 2.5°F/minute; that the reactor will be shut down immediately if a vessel leak is detected and operations will be suspended pending determination of its cause and severity. In addition, inspections of significant internal areas should be made at intervals of about one year. Details should be worked out with the Regulatory Staff. Furthermore, the 8" feed-water nozzles, the 10" steam nozzles, and the 16" forced circulation nozzles should be modified by grinding to a suitable radius and then reclad. An indication of primary vessel leakage should be provided in the reactor control room.
>
> "In addition to the foregoing restrictions, the Committee believes that use of this pressure vessel should be limited to a period of five years, or until it has been subjected to approximately 250 pressure-temperature cycles, whichever occurs first. The intent of this is to limit the number of pressure-temperature cycles experienced by the reactor vessel in its operating life."

Chairman Glen T. Seaborg on May 26 wrote the ACRS and requested clarification of the Committee's recommendations on the use of the pressure vessel.[48] The main point in question was whether the Committee meant "to rule out at this time any further evaluation of the pressure vessel for continued operation at the end of the five-year or 250 pressure-temperature cycle period."

On June 29, the ACRS responded as follows:[42]

> "The Committee's opinion was based on the uncertain fabrication history and inadequate inspection of this vessel during the fabrication, together with the discovery of several defects during early nonnuclear tests. In addition, difficulties of in-place inspection even before operation appear to make it doubtful that shut-down of the reactor and evaluation of the vessel after five years of operation will provide adequate assurance as to the safety of the vessel. If during the five-year period new

information which would permit a critical evaluation of the vessel is developed, it might be possible to re-examine the situation.

"In the light of present knowledge, however, it was the opinion of the Committee that the life of the vessel should be that indicated in our letter of May 26, 1962. The intent of the letter was to point out that the use of this vessel should be limited. If the Commission intends to operate the reactor for more than the recommended period, it would be prudent to be prepared to provide a new vessel at the end of that time. The suggested period provides adequate lead time for the design and construction of a new vessel while permitting full operation of the power plant in the interim."

During June, the Licensing and Regulatory Division identified ten specific items concerning the pressure vessel which required further attention before the Division could recommend the issuance of an operating authorization.[49] Technical specifications for the proposed reactor operation were also yet to be submitted to the AEC.

Enrico Fermi Atomic Power Plant (Docket 50-16)

Power Reactor Development Company on June 11, 1962, reported that the nonnuclear testing, alteration, and repair work on the 200-Mw(t) Enrico Fermi fast-breeder reactor was proceeding on schedule.[46] It is anticipated that the reactor will be completed and ready for fuel loading by the end of 1962.

On July 16, the AEC advised that more information was needed on several reactor components. It also anticipated that proposed technical specifications and errata and addenda to the Hazards Summary Report would be submitted in the near future by the Company.[47]

Hallam Reactor (Docket 115-3)

A public hearing was held on May 17, 1962, to consider issuance of an authorization for operation of the 240-Mw(t) sodium-cooled Hallam reactor up to 15% of total power while conducting wet critical experiments.[44] At that time hot sodium tests were in progress so that the results could not be reported.[50] The hearing was scheduled to be reconvened, first on June 8, and later on July 17 so that the test results could be presented.

Humboldt Bay Reactor (Docket 50-133)

A public hearing was held on July 19, 1962, to consider issuance of an 18-month provisional operating license for the 163-Mw(t) boiling-water Humboldt Bay reactor.[51] Technical specifications were offered with the approval of both the Pacific Gas and Electric Company and the AEC Regulatory Staff. The present application would cover operation up to an electrical power of about 50 Mw. After experience is gained and operating data analyzed, the Company will apply for permission to operate up to 70 Mw(e), if this action seems proper.

Indian Point Reactor (Docket 50-3)

The Indian Point Reactor achieved criticality on August 2, 1962.[52] Consolidated Edison Company of New York, Inc., had received authorization on May 16 to load the first core of the pressurized-water reactor and proceed gradually to a steady-state power level of 585 Mw(t).[45] Prior to this, on April 30, the Company submitted to the AEC 15 various corrections made to operating procedures and equipment.[53] These various items were declared not to involve unreviewed safety question or changes in the technical specifications.

On June 20 the Company requested authorization to change the technical specification minimum for the standby and start interlocks of the log count rate nuclear instruments to match experience at the reactor.[36] The AEC authorized the change on June 26.[49]

La Crosse Reactor (Docket)

Contracts for the 165-Mw(t) boiling-water La Crosse reactor were signed in early June 1962 by the AEC with the Dairyland Power Cooperative, La Crosse, Wisconsin, and the Allis-Chalmers Manufacturing Company, Nuclear Power Department, Washington, D. C.[54] In May, the Congressional Joint Committee on Atomic Energy held hearings on the program.[55] The Committee's purpose was to consider the financing arrangements between the Rural Electrification Administration and the AEC.

Pathfinder Reactor (Docket 50-130)

On June 18, 1962, the AEC granted Northern States Power Company a requested extension of the latest completion date for its 203-Mw(t) boiling-water Pathfinder reactor from July 1, 1962, to June 30, 1963.[36,56] Continued difficulty with superheater fuel fabrication necessitated the postponement. Recent investigations cast doubt on the suitability of 300 series stainless steel in a nuclear superheater environment. Pathfinder had planned to use type 316L stainless steel as cladding for its superheater fuel.

Northern States on June 12 submitted amendment No. 10 to its application for an operating license.[36] The amendment outlined three progressive phases of operation to full power. Though the plant completion date has been extended, the Company still hopes to reach initial criticality in December 1962.

Peach Bottom Reactor (Docket 50-171)

The Fish and Wildlife Service of the U.S. Department of Interior on June 20, 1962, filed a letter with the AEC concerning effects of the 117-Mw(t) high-temperature gas-cooled Peach Bottom reactor on commercial fisheries. It was concluded:[36]

> "... that the operation of ... [the reactor] ... will not adversely affect the availability or utilization of fishery organisms of the lower Susquehanna River or the Chesapeake Bay."

Piqua Nuclear Power Facility (Docket 115-2)

A public hearing was held on June 7, 1962, to consider issuance of a one-year provisional operating authorization for the 45.5-Mw(t) organic-cooled and -moderated Piqua reactor.[50] Witnesses from both North American Aviation and the AEC Regulatory Staff gave favorable testimony. Later in the month Hearing Examiner Samuel J. Jensch recommended issuance of the authorization.[57]

Plum Brook (NASA) Reactor (Docket 50-30)

A further public hearing was held on June 19, 1962, on the 60-Mw(t) light-water-cooled and -moderated Plum Brook research and testing reactor.[58] The first hearing was held on May 22 to consider authorization to operate the reactor up to full power.[44] The hearing was reopened so that evidence could be presented on a low-power pool-type reactor which is located about 100 ft from the Plum Brook reactor.

Saxton Reactor (Docket 50-146)

The ACRS on May 12, 1962, expressed the opinion that the Phase I program of the 20-Mw(t) pressurized-water Saxton reactor could be conducted

without undue risk to the health and safety of the public.[59] The program has two major objectives: (1) to investigate the use of boric acid in solution as a neutron poison for chemical shim and (2) to investigate operation at specific powers of up to 16 kw/ft of fuel rod. The ACRS also approved reduction of the minimum steady-state burnout safety factors from 2.4 to 2.2. It was emphasized that the reactor was intended primarily for experimental studies and the production of power was only incidental.

A public hearing was held on July 24 to consider amendment of the reactor provisional license to authorize the Phase I program.[60] Favorable testimony was given by representatives of the Saxton Nuclear Experimental Corporation, the Westinghouse Corporation, and the AEC Regulatory Staff. Saxton requested that the program-authorized power be lowered from 23.5 to 20 Mw because the higher power would require additional insurance premium expense.

Vallecitos Boiling-Water Reactor (Docket 50-18)

The General Electric Company on April 30, 1962, advised the AEC that a new set of control rods was being fabricated for the 50-Mw(t) Vallecitos boiling-water reactor.[45] The new rods were being made entirely of 300 series austenitic stainless steel, except for the poison plates, guide rollers, and axles for the rollers, which will be of stainless containing 2% natural boron, Haynes Stellite No. 3, and Haynes 25 alloy, respectively. The old rods were made of boron containing stainless steel and had shown some cracks.[61] The new rods were expected to eliminate deficiencies of the old rods and also eliminate the required periodic control rod examinations.

Yankee Reactor (Docket 50-29)

Yankee Atomic Electric Company on June 4, 1962, applied for a license amendment to authorize operation of the pressurized-water Yankee reactor with cores that essentially duplicate the initial core and at power levels up to 540 Mw(t).[46] Operation up to a power level of 485 Mw(t) was authorized with Core 1. Yankee proposed that the following protective features and precautions be adopted:

> "A third safety injection pump with higher head characteristic than the two existing safety injection pumps.
>
> "Automatic, low pressure actuation of three charging pumps.
>
> "Reactor scram on loss of a single main coolant pump.
>
> "Reactor scram on low neutron flux.
>
> "Scram set points closer to normal operating conditions.
>
> "Elimination of automatic rod withdrawal.
>
> "Rod withdrawal at power limited to a maximum of three inches in any eight-hour period.
>
> "With the addition of these protective features, the analyses show that, even with the worst measured power distributions, no accident or transient, except loss of coolant, will result in fuel temperatures high enough to damage the fuel. Even in the loss of coolant accident, the proper functioning of the safety injection system, no clad melting will take place and damage to the fuel will be limited to possible distortion of a very small percentage of the fuel rods."

Yankee requested that the matter be scheduled for review by the ACRS and for a public hearing at the earliest practicable dates.

Nuclear Merchant Ship N.S. SAVANNAH

The ACRS on July 27, 1962 reported favorably on a proposed interim plan of operation for the N.S. SAVANNAH during the period up to and

including entry of the ship into the Port of Galveston, Texas, early in the winter of 1962–63.[62] Among the committee comments were the following:

> "Except for the containment leakage rate, the performance history to date appears to be in accordance with design expectations. No serious operational problems have arisen. The Committee recognizes that the NS SAVANNAH is the first ship of its kind and in many ways is a pioneering effort.
>
> "The AEC–Maritime Joint Group has been able to develop a plan and a set of interim factors of analysis for port entry for the initial phases of the operation. The proposed interim factors of analysis appear to be basically consistent with those utilized to judge other reactor installations. The ship is mobile and, even if the reactor is inoperative, the ship may be moved by available non-nuclear auxiliary power or towed away by properly equipped tugs.
>
> . . . . . .
>
> "The double containment, with halogen- and particulate-removal systems, provides engineered safety additional to that present in most other reactors and is considered in the interim factors of analysis. In full, advantage is to be taken of this additional safety, requirements must be established and enforced to protect the integrity of the double containment. In particular, the early detection and plugging of leaks, the continuing efficiency checks of the halogen and particulate filters, and strict control of entry to the containment become very important.
>
> "The Committee recognizes that the continuing analysis of each port situation is a very difficult task. It therefore believes that the effort made by the AEC–Maritime Joint Group to develop interim port entry analysis factors has been a necessary one. It is our understanding that each port report and decision up to and including Galveston will be reviewed and approved by the Regulatory Staff.
>
> "It is clear that, during its initial operations, the NS SAVANNAH will be the object of much public attention; and its primary purpose will be that of exhibition. It will, therefore, attract large crowds of visitors. In view of the fact that the ship is a prototype, and knowledge that comes from experience remains to be acquired, the ACRS recommends that, during the period up to and including the Galveston port entry, the reactor be shut down and depressurized after berthing in a port if visitors are to be invited aboard in large numbers.
>
> "In summary, the Committee notes the following points:
>
> (a) the interim port analysis factors are in general agreement with site criteria for other reactors;

(b) the availability of auxiliary power will be frequently checked and the ship mobility will always be positively assured;

(c) the containment leakage including halogen and particulate removal filters will be monitored frequently;

(d) the power history of the reactor will be controlled before port entry;

(e) to date the ship has encountered favorable operating experience."

On August 1 the Licensing and Regulating Division of the AEC approved the interim plan. Commission approval followed on August 3.[63] Final approval required only that the reactor be shut down and depressurized prior to visitation by large numbers of visitors in the first two port visits. The Maritime Administration-Atomic Energy Commission Joint Group will be allowed to submit procedures for control of large numbers of visitors in subsequent ports with the reactor in operation on the basis of experience gained during the initial ports visits. (J. R. Buchanan)

SAFEGUARDS REPORTS AND SELECTED READING

Recently issued safeguards reports and selected literature pertaining to hazards of reactors are cited below for reference. Because of the similarity of many reactors (in particular, research reactors), this list is not intended to be all inclusive.

Hazards and Safeguards Reports

1. J. Metera, On the Course and Cause of the Reactor Damage at Windscale, USAEC Report AEC-tr-4145, 1958.

2. Heinz H. Cappel, Hazards Summary Report for the Walter Reed Army Medical Center Nuclear Research Reactor, USAEC Report AI-3739, Atomics International, May 6, 1959.

3. K. C. Ruzich and W. J. Sturm, eds., Hazard Summary Report for the Argonne AGN-201 Reactor, USAEC Report ANL-6510, Argonne National Laboratory, February 1962.

4. L. D. Stephenson, Hazards Report for the SM-1 Core II with the Silver-Cadmium-Indium Control Rod Absorber Section, USAEC Report APAE-84, Addendum VI, Alco Products, Inc., March 15, 1962.

5. C. W. Like, D. L. Gilliland, and R. E. Baker, Hazards Summary Report for SUSIE Reactor, USAEC Report APEX-459, General Electric Co., February 3, 1959.

6. John Funderburg, Spectral Shift Control Reactor, Basic Physics Program — Exponential Experiment — Hazard Evaluation, USAEC Report BAW-1215 and Suppl. 1, Babcock and Wilcox Co., December 1960.

7. Enrico Fermi Atomic Power Plant Revised License Application, Part B, Volume 7, Technical Information and Hazards Summary Report, USAEC Report NP-11526, 1961.

Operations Report

1. Carolinas Virginia Nuclear Power Associates, Inc., CVTR Project Monthly Progress Report, March 1962, USAEC Report WCAP-4123, Westinghouse Electric Corporation.

References

1. S. S. Rosen, Hazards Summary Report for the APPR-1 (SM-1) Task XVII, USAEC Report APAE-2, Alco Products, Inc., rev. 1, May 1960.

2. J. R. Coombe, Hazards Summary Report for the SM-1 Core Temperature and Flow Instrumentation (Task XIV), USAEC Report APAE-79, Alco Products, Inc., March 30, 1961.

3. J. R. Coombe, Hazards Report for the SM-1 Core II with Special Components, USAEC Report APAE-84, Alco Products, Inc., March 30, 1961.

4. J. G. Gallagher, Hazards Report for the SM-1 Core II Without Special Components, USAEC Report APAE-84, Add. 1, Alco Products, Inc., April 1961.

5. J. F. Scoles and J. R. Coombe, Hazards Report for the PM-1M-2 Element in SM-1 Core II, USAEC Report APAE-84, Add. II, Alco Products, Inc., September 1961.

6. J. R. Coombe, Hazards Report for the BF_3 Withdrawal Mechanism in the SM-1, USAEC Report APAE-2, Alco Products, Inc., Rev. 1, Suppl. 1, October 1961.

7. J. R. Coombe, Hazards Report for the SM-1 Core II Without the SM-1 Core I High Burnup Elements and with the PM-1M-2 Element, USAEC Report APAE-84, Add. III, Alco Products, Inc., October 1961.

8. J. R. Coombe, Hazards Report for SM-1 Core II with SM-1 Core I High Burnup Elements Replaced with SM-1 Core I Spare Element, October 1961.

9. J. R. Coombe, Hazards Report for SM-1 Core Temperature and Flow Instrumentation (Task XIV) Covering Special Test Procedures, USAEC Report APAE-49, Suppl. 2, Alco Products, Inc., March 1961.

10. D. L. Pomeroy, Hazards Report for Step Transient Loading Test on the SM-1 (Task XII), USAEC Report APAE-109, Alco Products, Inc., February 1962.

11. J. Gallagher, Hazards Report for the SM-1 Core II Without the SM-2B Element, USAEC Report APAE-84, Add. V, Alco Products, Inc., February 1962

12. L. D. Stephenson, Hazards Report for the SM-1 Core II with the Silver-Cadmium-Indium Control Rod Absorber Section, USAEC Report APAE-84, Add. VI, Alco Products, Inc., March 1962.

13. J. L. Meem, Initial Operation and Testing of the Army Package Power Reactor APPR-1, USAEC Report APAE-18, Alco Products, Inc., August 1957.

14. H. L. Weinberg and J. K. Leslie, Six Month Operating Contract Report, USAEC Report APAE-28, Alco Products, Inc., April 1958.

15. S. H. Weiss, Summary Report of Physics Measurements on SM-1 Core I, USAEC Report APAE-96, Alco Products, Inc., February 1962.

16. B. J. Byrne et al., SM-1 Reactor Core Inspection at 2/3 Core Life, USAEC Report APAE-55, Alco Products, Inc., January 1960.

17. D. Reale, SM-1 Reactor Vessel Closure Stud Investigation, USAEC Report APAE-110, Alco Products, Inc., March 1962.

18. G. W. Knighton, Repair of Damaged SM-1 Control Rod End Caps, Report OSB-6.

19. G. W. Knighton, Preliminary Investigation of SM-1 Control Rod Seal Failure, Report OSB-15, April 1961.

20. C. A. Bergmann and J. F. Cox, Fission Product Levels in the SM-1 Coolant, Paper Presented at Joint Conferences on Nuclear Reactor Chemistry and Analytical Chemistry in Nuclear Reactor Technology; Gatlinburg, Tenn., October 10–12, 1961.

21. Capt. R. A. Purple and Lt. J. R. Mullaly, Defective Fuel Element Detection at the SM-1 Nuclear Power Plant, Report OSB-12.

22. V. A. Swanson et al., Construction and Operation of the AE-6 Water Boiler Reactor, USAEC Report NAA-SR-1920, North American Aviation, Inc., August 15, 1957.

23. G. L. Blackshaw, Report on the Power Transient Occurring in the AE-6 Water Boiler Reactor and Steps Taken to Return the Reactor to Normal Operation, USAEC Report NAA-SR-Memo-3756, North American Aviation, Inc., April 15, 1959.

24. G. L. Blackshaw, Release of Fission Gases from the AE-6 Reactor on March 25, 1959, USAEC Report NAA-SR-Memo-3757, North American Aviation, Inc., April 15, 1959.

25. E. A. Moore, Jr., Operating Manual for the AE-6 Reactor, USAEC Report NAA-SR-Memo-5395, North American Aviation, Inc., June 23, 1960.

26. G. L. Blackshaw and C. H. Skeen, Safeguards Summary for the AE-6 Reactor, USAEC Report NAA-SR-5499, North American Aviation, Inc., March 15, 1961.

27. Comment on a Proposed AEC Regulation Amendment, Atomic Energy Clearing House, 8(20): 12–16 (May 14, 1962).

28. Changes in Licensing Regulations, Nuclear Safety, 3(4): 96–99 (September 1962).

29. Changes in Licensing Regulations, Nuclear Safety, 4(1): 12–16 (May 14, 1962).

30. Further Comments on AEC's Proposed Regulation Amendment, Atomic Energy Clearing House, 8(19): 22–29 (May 7, 1962).

31. Among Resolutions Adopted Last Month, Atomic Energy Clearing House, 8(19): 6–8 (May 7, 1962).

32. Following Below are Some of the Further Comments, Atomic Energy Clearing House, 8(23): 18–21 (June 4, 1962).

33. AEC Has Amended Its Regulations, Atomic Energy Clearing House, 8(24): 11–12 (June 10, 1962).

34. The Third Agreement Transferring Regulatory Authority, Atomic Energy Clearing House, 8(21): 4–7 (May 21, 1962).

35. Either Rejection, Without Prejudice, Atomic Energy Clearing House, 8(20): 5–6 (May 14, 1962).

36. Facility Licensing, Atomic Energy Clearing House, 8(28): 14–18 (July 9, 1962).

37. Letter from F. A. Gifford, Jr., to Hon. Glenn T. Seaborg, May 12, 1962, Subject: Report on Consumers Power Company – Big Rock Point Plant, available at AEC Public Document Room.

38. A Provisional 18 Month License, Atomic Energy Clearing House, 8(29): 13–15 (July 16, 1962).

39. Facility Licensing, Atomic Energy Clearing House, 8(24): 12–14 (June 10, 1962).

40. Facility Licensing, Atomic Energy Clearing House, 8(31): 8–13 (July 30, 1962).

41. A Public Hearing Has Been Set, Atomic Energy Clearing House, 8(31): 5–6 (July 30, 1962).

42. Following Below are Advisory Committee on Reactor Safeguards, Atomic Energy Clearing House, 8(29): 20–21 (July 16, 1962).

43. A Public Hearing Has Been Set, Atomic Energy Clearing House, 8(29): 2 (July 16, 1962).

44. Action on Reactor Projects by Licensing and Regulatory Bodies, Nuclear Safety, 4(1): ____ (September 1962).

45. Facility Licensing, Atomic Energy Clearing House, 8(22): 12–15 (May 28, 1962).

46. Facility Licensing, Atomic Energy Clearing House, 8(25): 7–11 (June 18, 1962).

47. Facility Licensing, Atomic Energy Clearing House, 8(30): 5–10 (July 23, 1962).

48. A Report on the Pressure Vessel, Atomic Energy Clearing House, 8(24): 10–11 (June 10, 1962).

49. Facility Licensing, Atomic Energy Clearing House, 8(29): 15–17 (July 16, 1962).

50. Reactor Hearing Before the AEC, Atomic Energy Clearing House, 8(24): 3 (June 10, 1962).

51. Hearing on an 18-Month Provisional Operating License, Atomic Energy Clearing House, 8(30): 33 (July 23, 1962).

52. The Indian Point Plant, Atomic Energy Clearing House, 8(32): 26 (August 6, 1962).

53. Facility Licensing, Atomic Energy Clearing House, 8(20): 7–10 (May 14, 1962).

54. Contracts for the La Crosse Boiling Water Reactor Plants, Atomic Energy Clearing House, 8(24): 9–10 (June 10, 1962).

55. A Second Hearing on the Dairyland, Atomic Energy Clearing House, 8(22): 6–12 (May 28, 1962).

56. Facility Licensing, Atomic Energy Clearing House, 8(23): 10–11 (June 4, 1962).

57. Issuance of a Provisional Operating Authorization, Atomic Energy Clearing House, 8(27): 1 (July 2, 1962).

58. A Further Public Hearing, Atomic Energy Clearing House, 8(25): 3 (June 18, 1962).

59. Advisory Committee on Reactor Safeguards Reports, Atomic Energy Clearing House, 8(21): 9–11 (May 21, 1962).

60. Amendment of the Provisional License, Atomic Energy Clearing House, 8(31): 31–32 (July 30, 1962).

61. Action on Reactor Projects by Licensing and Regulatory Bodies, Nuclear Safety, 3(2): 77–83 (December 1961).

62. Letter from ACRS Chairman, F. A. Gifford, Jr., to Hon. G. T. Seaborg, July 27, 1962, subject: N.S. SAVANNAH, available at AEC Public Document Room.

63. G. T. Seaborg et al., Memorandum and Authorization, In the Matter of N.S. SAVANNAH, August 3, 1962, available at AEC Public Document Room.

Internal Distribution

1. C. G. Bell
2. F. T. Binford
3. J. R. Buchanan
4-5. W. B. Cottrell
6. E. E. Gross
7. C. E. Guthrie
8. W. L. Harwell (K-25)
9. W. H. Jordan
10. W. de Laguna
11. H. G. MacPherson
12-16. E. J. Murphy
17. A. W. Savolainen
18. M. J. Skinner
19. J. A. Swartout
20. C. S. Walker
21. A. M. Weinberg
22-27. Laboratory Records Department
28. Laboratory Records Department, RC

External Distribution

29-30. R. Anderson, Patent Branch, AEC, Washington
31. H. A. Blair, University of Rochester, Rochester, N.Y.
32. B. F. Boardman, Phillips Petroleum Co., Idaho Falls, Idaho
33-34. E. T. Bond, OTIE, Oak Ridge
35. T. S. Chapman, Dow Rocky Flats, Denver, Colorado
36. B. J. Colley, TISE, Oak Ridge
37. F. E. Croxton, Goodyear Atomic Corporation, Portsmouth, Ohio
38. James Dodd, Babcock & Wilcox, Lynchburg, Virginia
39. W. E. Dreeszen, Ames Laboratory
40. K. A. Dunbar, Chicago Operations Office
41. W. E. Elliott, Patent Group, Livermore, California
42. E. E. Hall, Office of Ind. Dev., Washington, D.C.
43. C. D. Harrington, Mallinckrodt Chemical Works, St. Charles, Mo.
44-53. T. W. Hazard, Jr., Office of Technical Information, Washington, D.C.
54. Henry Heyman, Los Alamos Scientific Laboratory
55. D. W. King, Albuquerque Patent Group
56. S. Lawroski, Argonne National Laboratory
57. G. H. Lee, Chicago Patent Group, Lemont, Illinois
58. Max Linn, Sandia Corporation, Albuquerque, New Mexico
59. F. R. Long, Atomics International, Canoga Park, California
60. S. Marshall, National Lead Company of Ohio, Mt. Healthy Station, Cincinnati, Ohio
61. W. A. Minkler, Bettis Atomic Power Laboratory
62. J. W. Morris, Savannah River Laboratory, Du Pont, Aiken, South Carolina
63. J. C. Nevenzel, University of California, Los Angeles, California
64. H. S. Potter, New York Patent Group, Brookhaven National Laboratory
65. Dennis Puleston, TID, Brookhaven National Laboratory
66. Helen Redmen, Los Alamos Scientific Laboratory
67. F. A. Robertson, Savannah River Patent Group, Augusta, Georgia

68. H. M. Roth, ORO
69. H. W. Russell, Battelle Memorial Institute, Columbus, Ohio
70. E. M. Simmons, Battelle Memorial Institute, Columbus, Ohio
71. Delia F. Vroman, Knolls Atomic Power Laboratory
72. R. K. Wakerling, Lawrence Radiation Laboratory, Berkeley, California
73. W. K. Woods, Hanford Atomic Products, Richland, Washington
74. H. D. Young, Argonne National Laboratory
75. W. H. Zinn, General Nuclear Engineering Corporation
76-90. DTIE, AEC