ORNL
MASTER COPY

106

OAK RIDGE NATIONAL LABORATORY
operated by
UNION CARBIDE CORPORATION
for the
U.S. ATOMIC ENERGY COMMISSION

ORNL-TM-361

74

DEVELOPMENT OF A GENERAL METHOD OF EXPLICIT SOLUTION TO THE NUCLIDE CHAIN EQUATIONS FOR DIGITAL MACHINE CALCULATIONS

D. R. Vondy

NOTICE

This document contains information of a preliminary nature and was prepared primarily for internal use at the Oak Ridge National Laboratory. It is subject to revision or correction and therefore does not represent a final report. The information is not to be abstracted, reprinted or otherwise given public dissemination without the approval of the ORNL patent branch, Legal and Information Control Department.

LEGAL NOTICE

This report was prepared as an account of Government sponsored work. Neither the United States, nor the Commission, nor any person acting on behalf of the Commission:

A. Makes any warranty or representation, expressed or implied, with respect to the accuracy, completeness, or usefulness of the information contained in this report, or that the use of any information, apparatus, method, or process disclosed in this report may not infringe privately owned rights; or

B. Assumes any liabilities with respect to the use of, or for damages resulting from the use of any information, apparatus, method, or process disclosed in this report.

As used in the above, "person acting on behalf of the Commission" includes any employee or contractor of the Commission, or employee of such contractor, to the extent that such employee or contractor of the Commission, or employee of such contractor prepares, disseminates, or provides access to, any information pursuant to his employment or contract with the Commission, or his employment with such contractor.

ORNL-TM-361

Contract No. W-7405-eng-26

DEVELOPMENT OF A GENERAL METHOD OF EXPLICIT SOLUTION TO THE NUCLIDE CHAIN EQUATIONS FOR DIGITAL MACHINE CALCULATIONS

D. R. Vondy

DATE ISSUED

OCT 17 1962

OAK RIDGE NATIONAL LABORATORY
Oak Ridge, Tennessee
operated by
UNION CARBIDE CORPORATION
for the
U. S. ATOMIC ENERGY COMMISSION

TABLE OF CONTENTS

CHAPTER		PAGE
I.	INTRODUCTION	1
II.	THE NUCLIDE CHAIN EQUATION	3
III.	SOLUTION OF THE NUCLIDE CHAIN EQUATIONS	7
IV.	STUDY OF MACHINE CALCULATIONS	16
V.	RESULTS OF CALCULATIONS	28
VI.	SUMMARY AND CONCLUSIONS	50
	Summary	50
	Conclusions	50
BIBLIOGRAPHY		51
APPENDIXES		55
A.	THE MACHINE PROGRAM FOR SOLUTION OF THE NUCLIDE CHAIN EQUATIONS	56
B.	SAMPLE MACHINE PROBLEM	65
C.	CIRCULATING FLOW	70
D.	EQUATIONS FOR CORRELATION OF CONCENTRATION-DEPENDENT RESONANCE INTEGRALS	82
E.	IDENTIFICATION OF SYMBOLS	83

ABSTRACT

A practical, general procedure was developed for digital machine calculation of nuclide concentration behavior with time. This involved an explicit solution to the nuclide chain equations in a form most suitable for calculation with a limited number of significant figures. The procedure was programmed for the IBM-7090 with provision made for interlocking chains; limitations were examined by solution of a number of example problems. Study of the results indicated that the calculation is practical for application to reactor depletion problems and to other problems which can be represented by the equations.

ACKNOWLEDGMENT

The author thanks Dr. P. F. Pasqua for his suggestions, Mr. T. B. Fowler for his recommendations regarding machine programming and Dr. P. R. Kasten for his interest which contributed to this work. Mr. Fowler and Dr. Kasten are employed at the Oak Ridge National Laboratory.

Facilities at the Oak Ridge National Laboratory were used in this study through the courtesy of Union Carbide Nuclear Company, the operating company, and the United States Government.

This material was submitted to the University of Tennessee as a thesis in partial fulfillment of the requirements for the Degree Master of Science in Nuclear Engineering.

LIST OF TABLES

TABLE PAGE

I. Values of Terms in the Explicit Nuclide Equation for a Twelve Nuclide Chain 20

II. Comparison of Single Precision Results Based on Program Developed and Double Precision Results 24

III. Effect of the Value of the Scale Factor on Calculated Nuclide Concentrations 25

IV. Point Nuclide Concentrations at the End of Ten Day's Operation as Determined with Several Different Time Increments 32

V. Concentrations of Important Fission Products in the HFIR Estimated for Shutdown and Subsequent Operation . . 36

VI. Relative Reactivity of the High-Flux-Isotope-Reactor as a Function of Operating Time Followed by Shutdown and Subsequent Operation 38

VII. Samarium Burn-out from a Partially Depleted Core: Estimated Reactivity with Time 40

VIII. Dependence of Fuel Concentration Behavior on Fast to Thermal Flux Ratio in a Convertor Reactor 42

IX. Approximate Dependence of Reactivity on Flux Ratio in a Convertor Reactor 43

X. Formation of PB-207 from Decay of U-235 and Related Results 45

XI. Calculated Time Dependent Concentrations for a

TABLE PAGE

Fictitious Chemical Process 49

XII. Sample Problem Input Data Listed from IBM Cards 66

XIII. Sample Problem Machine Edit of Results 67

LIST OF FIGURES

FIGURE PAGE

1. Californium Production in the High-Flux-Isotope-Reactor 34
2. Dependence of Califorium Production on the Ratio of Fast to Thermal Neutron Fluxes 35
3. The Actinium Series 44
4. Flow Diagram and Associated First Order Rate Equations for a Continuous Process of Successive Chemical Reactions 47
5. Nucy Code Input Form 59

CHAPTER I

INTRODUCTION

The object of this study was to establish a general procedure for digital machine calculations of nuclide concentration behavior with time when exposed to a neutron flux, to examine the feasibility of wide application of this procedure, and to establish limitations of the procedure.

The long-term behavior of nuclear reactors must be studied if practical and economical facilities are to be built. Of major importance in reactor time behavior are concentrations of nuclides as obtained through the coupled chain equations. Accumulation of fission products, production of fissionable nuclides from fertile material, depletion of fuel and control rods, and burnable poison behavior all help to determine the operating life of a particular reactor loading. Because of this, the time behavior of a critical reactor represents a complex problem. It is necessary to separate into successive steps the calculations of neutron accounting and the calculation of the time behavior of nuclide concentrations in most situations of interest (3,5).[1]

The practice which was previously followed in machine calculations of nuclide time behavior considered specific nuclide chains. Information describing particular chains was made an integral part of the machine programs (3,5). The amount of data which must be prepared for any specific calculation is thereby minimized, but limitations are then placed on the generality of the calculations which may be made.

---

[1]Numbers in parenthesis refer to similar numbers in bibliography.

In this study a general, explicit solution was obtained to the coupled nuclide chain equations in a form desirable for machine calculations. Also a machine program was established which permits contributions from several nuclide chains to be summed.

The calculation was pointed toward the nuclide concentrations at a space point in a reactor during exposure to two-energy-group neutron fluxes. Concentrations of these nuclides were determined after successive intervals of time as described by the coupled, nuclide concentration, time dependent chain equations. A number of calculations were made to establish limitations of the method of calculation. Some attention was given to application of this method of calculation to situations where materials circulate in a loop external to the reactor and a discussion on this topic is presented in Appendix C.

CHAPTER II

THE NUCLIDE CHAIN EQUATION

Disintegration of a specific nucleus (or neutron capture by a nucleus in a given neutron flux field) is independent of past history, but is subject to statistical fluctuations. Considering a relatively large number of atoms, however, the statistical fluctuations need not be considered, and the rate of disintegration would be proportional to the number of atoms present. Schweidler showed in 1905, with a statistical approach, that the law of decay is exponential, in agreement with results of earlier experiments by E. Rutherford (6).

Considering p to be the probability per unit time for a particular atom to disintegrate in all possible ways and assuming that p is not dependent on past history nor present circumstances, then over a short time interval $\Delta\theta$, $p = \lambda\Delta\theta$, where λ is a characteristic proportionality constant. The probability that the atom has not disintegrated during this time interval is $1 - \lambda\Delta\theta$ and following n intervals this probably is $(1-\lambda\Delta\theta)^n$. Further, the probability that the atom has not disintegrated in time $t = n\Delta\theta$ is the limit as $\Delta\theta \to 0$, $n \to \infty$, of $(1-\lambda\Delta\theta)^n$. If a large number of radioactive atoms of one species is considered, then the concentration as a function of the initial concentration with no mass transport is given by:

$$N(t) = \lim_{n\to\infty} N(o)(1-\lambda t/n)^n = N(o)e^{-\lambda t}. \tag{2.1}$$

This result for a stationary process may be expressed in the following rate equation:

$$\frac{dN_i(\theta)}{d\theta} = -\lambda_i N_i(\theta). \tag{2.2}$$

The rate of formation from decay of a precursor species is $\lambda_{i-1}N_{i-1}(\theta)$, and so for a nuclide which has a decay source and a sink, the rate equation becomes:

$$\frac{dN_i(\theta)}{d\theta} = -\lambda_i N_i(\theta) + \lambda_{i-1}N_{i-1}(\theta). \tag{2.3}$$

Capture of a neutron by a precursor causes formation at the rate:

$$\int_E \phi(E,\theta)\sigma_{c,j}(E)N_j(\theta)dE,$$

where $\phi(E,\theta)dE$ is the neutron flux in energy interval dE about E to which the nuclide j is exposed and $\sigma_{c,j}(E)$ is the microscopic capture cross section. Defining

$$\sigma_c\phi(\theta) = \int_E \phi(E,\theta)\sigma_c(E)dE,$$

the formation rate of the product nuclide is given by $\sigma_{c,j}\phi(\theta)N_j(\theta)$. Similarly, neutron absorption causes a loss whose rate is given by $\sigma_{a,i}\phi(\theta)N_i(\theta)$.

Splitting of a nucleus by fission forms nuclei of lower atomic weight. The rate of production of a product nuclide i from fission of nuclide k for a yield fraction of $y_{i,k}$ is given by:

$$\int_E \phi(E,\theta)\sigma_{f,k}(E)N_k(\theta)y_{i,k}(E)dE$$

where $\sigma_{f,k}(E)$ is the microscopic fission cross section of nuclide k. Defining

$$\sigma_f\phi(\theta)y_i = \int_E \phi(E,\theta)\sigma_f(E)y_i(E)dE,$$

then the rate of formation of the yield product is given by $\sigma_{f,k}\phi(\theta)$ x $y_{i,k}N_k(\theta)$.

Summing contributions, the rate equation becomes:

$$\frac{dN_i(\theta)}{d\theta} = -\left[\lambda + \sigma_{a,i}\phi(\theta)\right] N_i(\theta) + \sum_n \lambda_n N_n(\theta)$$

$$+\sum_j \sigma_{c,j}\phi(\theta)N_j(\theta) + \sum_k \sigma_{f,k}\phi(\theta)\, y_{i,k}N_k(\theta). \tag{2.4}$$

This equation may be written in a condensed form as follows:

$$\frac{dN_i(\theta)}{d\theta} = -q_i(\theta)N_i(\theta) + \sum_k Y_{i,k}(\theta) + \sum_j S_j(\theta)N_j(\theta), \qquad (2.5)$$

where $N_i(\theta)$ is the concentration of the ith nuclide at time θ,

$N_j(\theta)$ is the concentration of precursor j at time θ,

$q_i(\theta)$ is the loss term associated with nuclide i,

$S_j(\theta)$ is the source term associated with nuclide j,

$Y_{i,k}(\theta)$ is a yield rate term associated with fission of nuclide k.

The expressions above have been developed with the assumption that the atoms in question experience no mass transport. To consider a situation of flow into and out of a control volume, $V(\theta)$, in which there is complete mixing, a mass balance may be made for each nuclide of the system:

Accumulation = Gains - Losses;

$$\frac{d\left[V(\theta)N_i(\theta)\right]}{d\theta} = V(\theta)\sum_j S_j(\theta)N_j(\theta) + \text{rate of feed of } N_i$$

$$+ V(\theta)\sum_k Y_{i,k}(\theta) - V(\theta)q_i(\theta)N(\theta) - \text{rate of removal of } N_i. \qquad (2.6)$$

For the simple situation of fixed volume, $V(\theta)$ constant, the rates of removal and addition are given by the flow rate times the applicable concentration of nuclide i in the flow stream. The control volume may be at one space location or one associated with a flow stream.

In a situation where there is significant diffusive and/or convective transport, account should be taken of such loss or gain. One method of gross accounting for loss of fission products through diffusion is to consider that the rate of loss is a function of the concentration distribution. For a particular situation, the appropriate transport equations

can be used to determine effective values of $\lambda_i(\theta)$ which take into account both decay and transport effects. This aspect is not pursued herein.

Comparing equations (2.5) and (2.6), it is seen that equation (2.5) may be interpreted to represent conditions in a circulating fuel reactor under certain circumstances. This situation is examined in Appendix C.

For one energy group flux analysis it is convenient to consider the product of the flux times the time as an independent variable. This approach is not practical for more than one group analysis.

CHAPTER III

SOLUTION OF THE NUCLIDE CHAIN EQUATIONS

I. GENERAL DISCUSSION

It is usual that the power level of a reactor is to be maintained constant. As fuel nuclides are consumed the neutron flux must be increased to effect the desired fission rate. The actual situation will be approximated here by assuming that yield rate of fission products is constant with time and further assuming that the neutron flux is constant over a specific time interval. With these assumptions the nuclide chain equation is simplified since many of the terms will not have a time dependence, and the equation becomes:

$$\frac{d\left[N_i(\theta)\right]}{d\theta} = \sum_j S_j N_j(\theta) + Y_i - q_i N_i(\theta), \tag{3.1}$$

$$\text{where } Y_i = \sum_k Y_{i,k}.$$

Although the assumption of constant yield rate is in general consistent with a constant power level, the assumption of constant flux level is not. The length of time interval over which a constant flux level can be assumed without appreciable error depends upon the particular situation. The higher the rate of depletion the shorter the time interval should be. In one study (4) it was found that the accuracy of calculated nuclide concentrations (short chain fission products) was accurate within 0.1% for a $\Delta\theta$ of 1 hour and within 2% for a $\Delta\theta$ of 2 hours. For reactivity lifetime calculations, time intervals of 5 days have been used with satisfactory results (8).

An explicit solution to a differential equation is generally considered better than a finite-difference solution due to the inherent limitations associated with the latter. A detailed study is given below of the explicit method of solution followed by remarks about finite difference solutions.

II. EXPLICIT SOLUTION OF THE EQUATIONS

An explicit solution to the coupled chain equations for pure decay considering that only the first nuclide of the chain has an initial concentration, was obtained by Bateman in 1910 (1). The equation and corresponding solution are:

$$\frac{d\left[N_i(\theta)\right]}{d\theta} = \lambda_{i-1}N_{i-1}(\theta) - \lambda_i N_i(\theta),$$

$$N_i(0) = 0, \; i>1;$$

$$N_i(t) = \lambda_1\lambda_2 \cdots\cdots \lambda_{i-1}N_1(0)\sum_{j=1}^{i}\frac{e^{-\lambda_j t}}{\prod_{k\neq j}(\lambda_k-\lambda_j)} . \tag{3.2}$$

Extending this to the general situation considered here, except limited to one chain and no yield, the following equation is of interest:

$$\frac{d}{d\theta}\left[N_i(\theta)\right] = S_{i-1}N_{i-1}(\theta) - q_i N_i(\theta).$$

The solution can be written in the form:

$$N_i(t) = \sum_{k=1}^{i}\left\{N_k(o)\left[\sum_{j=k}^{i} e^{-q_j t}\prod_{n=k}^{i}\frac{S_{n-1}}{(q_n-q_j)}\right]\right\}, \tag{3.3}$$

where $S_{n-1} = 1$ when $n = k$; $q_n-q_j = 1$ when $n = j$.

This result was obtained by Bateman in 1910 (1) by Laplace transform techniques for the case of pure decay, although it was not expressed in condensed form.

Equation (3.3) was programmed by Lietzke and Claiborne (9). They found that digital machine calculations limited to eight significant figures resulted in erroneous results if long nuclide chains were considered; more significant figures were required to avoid error and they made provisions for this by special calculations involving 20 significant figures. These special calculations increased calculation time significantly.

In resolving short nuclide chains, Bookston (3) and later Breslauer and Karricker (4) obtained more accurate answers by arranging terms in a manner different from that shown in equation (3.3). The expressions for specific short chains used by others are extended in this study to a general solution, as illustrated below. Consider only the first nuclide of a chain to have a non-zero initial concentration; then

$$N_i(t) = e^{-q_i t}\int_0^t S_{i-1}N_{i-1}(\theta)e^{q_i\theta}\,d\theta,\ i>1;$$

$$N_1(t) = N_1(0)e^{-q_1 t},$$

$$N_2(t) = \int_0^t S_1N_1(0)e^{-q_2 t}e^{(q_2-q_1)\theta}\,d\theta,$$

$$N_2(t) = S_1N_1(0)\left(\frac{e^{-q_1 t}-e^{-q_2 t}}{q_2-q_1}\right),$$

$$N_3(t) = \int_0^t S_1S_2N_1(0)e^{-q_3 t}\left(\frac{e^{(q_3-q_1)\theta}-e^{(q_3-q_2)\theta}}{q_2-q_1}\right)d\theta,$$

$$N_3(t) = S_1S_2\,\frac{N_1(0)}{q_2-q_1}\left[\frac{e^{-q_1 t}-e^{-q_3 t}}{q_3-q_1} - \frac{e^{-q_2 t}-e^{-q_3 t}}{q_3-q_2}\right],$$

$$N_i(t) = N_1(0)\sum_{j=1}^{i-1}\left(\frac{e^{-q_j t}-e^{-q_i t}}{q_i-q_j}\right)\left[S_j\prod_{\substack{n=k\\ n\neq j}}^{i-1}\frac{S_n}{(q_n-q_j)}\right].$$

Accounting for the initial concentration of each nuclide in the chain, the general solution is given by:

$$N_i(\tau+t) = N_i(\tau)e^{-q_i t} + \sum_{k=1}^{i-1}\left\{N_k(\tau)\sum_{j=k}^{i-1}\left(\frac{e^{-q_j t}-e^{-q_i t}}{q_i-q_j}\right) \times \left[S_j \prod_{\substack{n=k \\ n\neq j}}^{i-1} \frac{S_n}{q_n-q_j}\right]\right\}. \tag{3.4}$$

For machine calculations limited to a particular number of significant figures, the form of equation (3.4) is superior to that of equation (3.3). There will be fewer significant figures lost in usual calculations if an accurate determination is made of the difference in exponential terms. This aspect is discussed further in Chapter IV.

For the situation of fission yield of the first member in a chain with only decay characteristics associated with other members of the chain, the appropriate equations are:

$$\frac{d}{d\theta}\left[N_i(\theta)\right] = \lambda_{i-1}N_{i-1}(\theta) - \lambda_i N_i(\theta), \; i>1;$$

$$\frac{d}{d\theta}\left[N_1(\theta)\right] = Y_1 - \lambda_1 N_i(\theta).$$

The general solution to these equations can be written as (2):

$$N_i(t) = \lambda_1\lambda_2 \cdot \cdot \cdot \lambda_{i-1}Y_1\sum_{j=1}^{i}\frac{(1-e^{-q_j t})}{\lambda_j \prod_{\substack{k=1 \\ k\neq j}}^{i}(\lambda_k-\lambda_j)}. \tag{3.5}$$

Extending this solution to the more general situation corresponding to a constant fission yield rate for each nuclide along a chain gives:

$$N_i(t) = \left(\frac{1-e^{-q_i t}}{q_i}\right)\left\{Y_i + \sum_{k=1}^{i-1} Y_k\left[\prod_{n=k}^{i-1}\left(\frac{S_n}{q_n}\right)\right]\right\}$$
$$-\sum_{k=1}^{i-1}\left\{Y_k\sum_{j=k}^{i-1}\left(\frac{e^{-q_j t}-e^{-q_i t}}{q_i - q_j}\right)\left[\frac{S_j}{q_j}\prod_{\substack{n=k\\ n\neq j}}^{i-1}\frac{S_n}{q_n-q_j}\right]\right\} . \qquad (3.6)$$

The contribution to a nuclide concentration from fission yield of members in the chain given by equation (3.6) must be added to other contributions given by equation (3.4). Equation (3.6) may be written in many forms some of which will produce more accurate results than others; however, the form given was selected because it is similar to that of equation (3.4) and common terms need be evaluated only once. Fission-product chains of the most interest are short and extreme accuracy is not deemed necessary. This has proven to be a correct assumption for practical situations investigated.

Equations (3.4) and (3.6) formed the basis for calculations made in this study.

Nuclide contributions from fission yield and individual precursors are additive and may be calculated separately. Indeed, contributions following several different chain routes may be calculated separately and cumulated. This approach can be shown to be valid by considering a general situation. Let $N(\theta)$ be the concentration of some nuclide in question, where $N(\theta)$ is the sum of several concentrations to be considered individually; thus, $N(\theta)$ is written as:

$$N(\theta) = \sum_{i=1}^{n} N_i(\theta). \qquad (3.7a)$$

Consideration of two precursors and a direct fission yield as

separate contributors to $N(\theta)$ leads to the following expressions:

$$\frac{dN_1(\theta)}{d\theta} = -qN_1(\theta) + S_1M_1(\theta),$$

$$\frac{dN_2(\theta)}{d\theta} = -qN_2(\theta) + S_2M_2(\theta), \text{ and}$$

$$\frac{dN_3(\theta)}{d\theta} = -qN_3(\theta) + Y(\theta). \tag{3.7b}$$

Here q is the usual loss term, S_1 and S_2 source terms, M_1 and M_2 precursor concentrations and Y the yield rate. Adding these three equations gives the general expression applicable to this situation:

$$\frac{dN(\theta)}{d\theta} = \sum_{i=1}^{3} \frac{dN_i(\theta)}{d\theta} = -qN(\theta) + S_1M_1(\theta) + S_2M_2(\theta) + Y(\theta). \tag{3.7c}$$

Thus, Eq. (3.7c) is linear and may be separated into parts.

For illustration, it may be assumed that concentrations of the precursors and yield rate are not time dependent. Assuming the initial concentration of N_i is zero, integration of the three separate equations of (3.7b) above yields the results given below for a time interval t:

$$N_1(t) = \frac{S_1M_1}{q}(1-e^{-qt}),$$

$$N_2(t) = \frac{S_2M_2}{q}(1-e^{-qt}),$$

$$N_3(t) = \frac{Y}{q}(1-e^{-qt}).$$

Summing these results gives the explicit solution:

$$N(t) = \sum_{i=1}^{3} N_i(t) = \left(\frac{S_1M_1}{q} + \frac{S_2M_2}{q} + \frac{Y}{q}\right)(1-e^{-qt}).$$

For a complete solution it is necessary to add a term due to the initial concentration of the nuclide in question:

$$N(t) = N(0)e^{-qt} + \left(\frac{S_1M_1}{q} + \frac{S_2M_2}{q} + \frac{Y}{q}\right)(1-e^{-qt}). \tag{3.8}$$

The same result would be obtained by considering the general equation for this case. Thus, individual contributions from several sources may be calculated separately and results cumulated. This simple approach may be used to resolve problems involving several nuclide chains containing common nuclides. Provision was made in the machine program for resolution of complex chains by this technique.

III. FINITE DIFFERENCE SOLUTION OF THE DIFFERENTIAL EQUATIONS

In the simplest finite difference form equation (3.1) becomes:

$$\Delta N_i(\theta) = \left[\sum_j S_j N_j(\theta) + Y_i - q_i N_i(\theta)\right] \Delta\theta. \tag{3.9}$$

In a calculation this equation is solved for the nuclide concentrations as a function of time beginning with the first nuclide in a chain and proceeding in order through the chain. To obtain concentrations at time t after zero time, t is divided into short intervals, $\Delta\theta = t/m$ where m is an integer. Values of $N_i(\theta)$ are approximated by values at the start of intervals plus corrective terms, thus:

$$N_i(\theta) \approx N_i(0) + \sum_{n=1}^{m} \left(\frac{\Delta N_i(\theta)}{\Delta\theta_n}\right) \Delta\theta_n.$$

Values of precursors may be averaged over the interval $\Delta\theta$:

$$\bar{N}_j\ (\theta,\ \theta+\Delta\theta) \approx \frac{1}{2}\left[N_j(\theta) + N_j(\theta + \Delta\theta)\right].$$

Also, more elaborate approximations could be made.

Using the above approach, an accurate solution is obtained provided $\Delta\theta$ is sufficiently small. One way of establishing this condition is to

compare results obtained using different times for $\Delta\theta$. If the difference in the two concentrations relative to the final value is greater than a specified convergence ϵ, $\Delta\theta$ is reduced and the calculation repeated until the following condition is satisfied:

$$\left| \frac{N(t)_{\Delta\theta} - N(t)_{m\Delta\theta}}{N(t)_{\Delta\theta}} \right| < \epsilon, \quad m > 1.$$

This method of calculation is the simplest of the three methods although many calculations are involved when small time increments are used. A particular advantage of the method is that concentrations of successive nuclides in a chain are obtained directly from precursor concentrations without considering other nuclides in the chain.

A suitable value of $\Delta\theta$ depends on the particular problem. In one reactor calculation involving only short nuclide chains (up to 5 nuclides) a value for $\Delta\theta$ of 5 days was found to be satisfactory (8). If specific nuclide chains are to be considered, simplification is possible, particularly if only principal effects are considered. For example, xenon effects may be adequately studied with a two nuclide chain although more nuclides are involved; here, consideration of direct yield of I^{135} and Xe^{135} from fission, decay of I^{135} to Xe^{135}, and loss of Xe^{135} by neutron capture and decay usually describes the situation adequately.

IV. FINITE DIFFERENCE SOLUTION OF THE INTEGRAL EQUATIONS

Equation (3.1) also may be put into the integral form:

$$N_i(t) = N_i(0)e^{-q_i t} + \int_0^t \left[\sum_j S_j N_j(\theta) + \sum_k Y_{i,k} \right] e^{q_i(\theta - t)} d\theta. \qquad (3.10)$$

It is necessary to accurately approximate the integral. Several finite difference forms can be used, one of which is:

$$N_i(t) = N_i(0)e^{-q_i t} + \sum_{n=1}^{m} \left[\sum_j S_j N_j(\theta) + \sum_k Y_{i,k}\right]\left(\frac{t}{m}\right) e^{q_i t(\frac{n}{m} - \frac{1}{2m} - 1)} \tag{3.11}$$

Since powers of e used must be evaluated many times it appears impractical to use this approach; rather, use of the explicit solution appears preferable.

CHAPTER IV

STUDY OF MACHINE CALCULATIONS

I. GENERAL DISCUSSION

The IBM-7090 machine (13, 14) available to Oak Ridge National Laboratory has a core storage of 32,768 words (fast memory) and ten data tapes of $2x10^6$ word capacity. A program now in use which contains certain instructions for handling production runs, reduces the effective core storage to about 32,000 words; also, a typical program uses available library routines which further reduce the practical storage to about 29,000 words. Calculations are normally made in floating point mode--each word consists of a number and the exponent of ten associated with the number. Thus 2731.8 might be stored as 2.7318 with the exponent +3.

Each machine word consists of 36 binary bits. In representing a number, 27 binary bits are used to represent digits, 8 bits for the exponent digits and one bit for the sign of the exponent. The range of numbers which may be handled is $2^{-128} \leq x \leq 2^{+127}$ or approximately $10^{-38} \leq x \leq 10^{+38}$. Significance of numbers is limited to approximately 8 decimal figures.

Of particular importance here is the number of significant figures carried along in a calculation. If numbers are limited in significance, subtraction of one number from another can lead to results which have low significance. For example, using 8 significant figures, the subtraction of $e^{-.01}$ from unity leaves only 6 significant figures, while $1-e^{-.0001}$ gives an answer having only 4 significant figures.

A "double-precision" mode of calculation is available and can be used to increase the number of significant figures carried along. In this mode two storage words are used for a number and one for the exponent of 10. The significant decimal figures are increased to approximately 20 and the limitation on the exponent of ten is increased to 2^{33}. (Use of one complete storage word for a number and one for the exponent of 10 increases the significant decimal figures only to 10.) Experience with this mode of calculation has shown that the calculating time for solutions involving exponentials is increased by a factor of more than 10 over that associated with the normal mode; thus, general use of the double precision mode is not economical if better methods are available.

Programming the IBM-7090 is usually done in Fortran language. Instructions to the machine for a procedure of calculation are written in a simple manner; algebraic equations are written as such. These Fortran instructions are compiled by the machine into a binary program in machine language which may be used thereafter along with data for calculations. Compiling an elaborate program (without subroutines) requires about 5 minutes machine time.

II. THE PROGRAM

A machine program was written and compiled based on the explicit solution of the nuclide chain equations. The program is based on equations (3.4) and (3.6) and provision is made for cumulation of contributions along more than one nuclide chain route. This program was developed to facilitate the calculation of nuclide concentration changes during reactor fuel exposure. A discussion of the calculation follows.

Given initial nuclide concentrations and fast neutron and thermal neutron flux levels, microscopic fission and neutron capture cross sections are calculated with account taken of the dependence of the resonance integrals on nuclide concentrations (see Appendix D). From a description of nuclide chains and decay constants, loss terms are calculated. Nuclide concentrations are established at the end of each of a specified number of time intervals. Neutron flux levels can be adjusted (by option) to maintain constant fission rate at the beginning of each time step. Following reactor shutdown, nuclide concentrations are calculated for a specified number of time steps considering zero flux level to establish after-shutdown behavior. The calculation gives the nuclide behavior at a point in a reactor, thus approximating the actual situation if effective flux levels are used. The time interval may be changed during a calculation and also the neutron flux levels. Concentrations of several nuclides may be adjusted during a calculation to maintain initial neutron multiplication. Nuclides circulating in a loop external to the reactor core may be considered by an approximation discussed in Appendix C. Reactor operation following a period of shutdown also may be considered.

The program was written in a form which permits adaptation for use as a subroutine program in multi-region reactor-depletion codes.

III. LIMITATIONS IN MACHINE PROGRAM

Equation (3.4) under study contains the sums of the products of two terms:

$$\sum_{j=k}^{i-1} \left[\frac{e^{-q_j t} - e^{-q_i t}}{q_i - q_j} \right] \left[S_j \prod_{\substack{n=k \\ n \neq j}}^{i-1} \left(\frac{S_n}{q_n - q_j} \right) \right].$$

If nuclide i is stable, this reduces to:

$$\sum_{j=k}^{i-1} [A][B] \equiv \sum_{j=k}^{i-1} \left[\frac{1-e^{-q_j t}}{q_j}\right] \left[S_j \prod_{\substack{n=k \\ n\neq j}}^{i-1} \left(\frac{S_n}{q_n - q_j}\right)\right] . \tag{4.1}$$

Here [A] and [B] correspond to the bracketed terms in the right hand expression. Terms [A] and [B] were evaluated for a 12 nuclide chain of interest (pure decay process, with $t = 3.156 \times 10^7$, i.e., one year). The results of hand calculations are shown in Table 1. The values for [A] are well within machine range. Three of the numbers for [B] are out of machine range, i.e., $<10^{-38}$, and would be set to zero; setting these three values of [B] to zero would not alter the sum because the terms make an insignificant contribution.

Two limitations of the calculation are illustrated in this example. First, the term [B] tends to be a small number. Second, loss of significance may be a problem. The product terms ([A] x [B]) for j=1 and j=3 have the same absolute value but opposite sign; the sum of these two product terms is zero provided they are indeed identical. It can be expected that any chain will be evaluated accurately only if: (1), values of [B] which make significant contributions to the sum are kept within machine range and (2), two values of the product [A] x [B] of opposite sign and nearly the same absolute value do not make the principal contribution to the sum.

To keep the principal values of [B] within machine range, in the programmed calculation, [B] was scaled by a large number (10^{15}). This range factor was applied to the first term of the product; the sum of the products [A] x [B] was then divided by this number to obtain the actual result.

TABLE I

VALUES OF TERMS IN THE EXPLICIT NUCLIDE EQUATION[a]
FOR A TWELVE NUCLIDE CHAIN

NUCLIDE;	$[A] = \frac{1 - e^{-q_j t}}{q_j}$	$[B] = S_j \prod_{\substack{n=k \\ n \neq j}}^{i-1} \frac{S_n}{(q_n - q_j)}$	PRODUCT [A]x[B]
1	3.156×10^{7}	3.080×10^{-17}	9.7205×10^{-10}
2	1.3317×10^{5}	3.79×10^{-28}	-5.0471×10^{-23}
3	3.156×10^{7}	-3.080×10^{-17}	-9.7205×10^{-10}
4	3.156×10^{7}	1.9556×10^{-20}	6.1719×10^{-13}
5	1.8182×10^{3}	-3.1353×10^{-33}	-5.7006×10^{-30}
6	7.812×10^{10}	-1.7284×10^{-42}	-1.3502×10^{-32}
7	6.944×10^{2}	3.7011×10^{-35}	2.5700×10^{-33}
8	2.6385×10^{-3}	3.8711×10^{-83}	1.0214×10^{-85}
9	3.125×10^{3}	1.7643×10^{-32}	5.5134×10^{-29}
10	1.869×10^{2}	3.6896×10^{-39}	6.8958×10^{-37}
11	4.1459×10^{2}	-1.5152×10^{-36}	-6.2819×10^{-34}
SUM			6.172×10^{-13}

[a]See text, equation (4.1)

To evaluate [A], it was put in the following form:

$$\frac{e^{-q_k t} - e^{-q_i t}}{q_i - q_k} = te^{-q_k t}\left[\frac{1-e^{-(q_i-q_k)t}}{(q_i-q_k)t}\right].$$

When t is small, serious loss of significance occurs if this formula is used. However, if $|x|<0.01$, series approximations are useful:

$$e^{-x} \simeq 1 - x + \frac{x^2}{2} - \frac{x^3}{6},$$

$$\frac{1 - e^{-x}}{x} \simeq 1 - \frac{x}{2} + \frac{x^2}{6} - \frac{x^3}{24}. \tag{4.2}$$

The above approximations were used when $(q_i-q_k)t$ was less than 0.01. This did not lead to significant errors. The above approximations also reduced machine calculating time below that required if powers of e were evaluated individually.

As indicated above, inaccuracies can arise if one number is subtracted from another and these numbers have about the same value. These difficulties can exist independently of chain length and the time increment. For example, consider the exposure of U^{235} and the resulting formation of U^{237}. After a one-day exposure of U^{235} to a high flux, the concentration of U^{237} is given by equation (3.4) as:

$$N^{237} = -2.29510\ (10^{-14})\left\{\frac{e^{-0.000715017} - e^{-0.102643}}{0.000001179724} - \frac{e^{-0.0000705167} - e^{-0.102643}}{0.000001187184}\right\},$$

$$N^{237} = -2.29510\ (10^{-14})\left\{0.08208360 - 0.08211027\right\},$$

$$N^{237} = 6.12\ (10^{-13}). \tag{4.3}$$

Here, three significant figures are lost leaving five significant figures if eight place machine calculations are used.

If the above problem is solved using equation (3.3), the result is:

$$N^{237} = 2.09729\ (10^{-13}) \left\{ \begin{array}{l} -9.27604\ (10^{4})e^{-0.000715017} \\ + 9.21776\ (10^{4})e^{-0.0000705167} \\ + 5.82747\ (10^{2})e^{-0.102643} \end{array} \right\},$$

$$N^{237} = 2.09729\ (10^{-13}) \left\{ -92694.1 + 92171.1 + 525.899 \right\},$$

$$N^{237} = 6.1\ (10^{-13}). \qquad (4.4)$$

In the above subtraction, four significant figures are lost, leaving only four significant figures if eight significant figures are used throughout the calculations. Thus more accurate results were obtained with equation (3.4) than with equation (3.3).

The above calculations were for a time step of one day. For a time step of 0.01 day, 5 significant figures were lost through use of equation (3.4); for a time step of 100 days, only 1 significant figure was lost. Thus the accuracy to be expected decreases as the time step decreases; the loss in accuracy appears to be approximately in proportion to the logarithm of the reciprocal of the time step.

In order to further check the adequacy of the calculational procedure developed here, machine results using this procedure were compared with those obtained using double-precision arithmetic, for the case of a 12 isotope chain involving alpha decay as well as beta decay. The specific problem involved the buildup of Cf^{252} from exposure of Pu^{242} to 1.9×10^{23} neutrons/cm^2. In the alpha decay reaction, the product isotope becomes one of the precursor isotopes; to treat this situation analytically requires consideration of double roots which lead to a special solution to the chain equations, not equation (3.4). However, from a practical viewpoint, the product from alpha decay can be considered to have slightly different decay characteristics from the identical

precursor, and this permits the relatively-simple calculational procedure developed here to apply to the case at hand (9). Specifically, the neutron-capture cross sections associated with the products of alpha decay were made 0.2% different from the cross sections associated with the identical precursor.

Although this procedure required more nuclides to be considered, the calculation method was much simpler and also generally applicable.

Shown in Table II is a comparison of the results from the calculational procedure developed here with the results based on double-precision arithmetic (9). In this problem only Pu^{242} had an initially non-zero concentration (2.48884×10^{23} atoms/cm^3) and the exposure time was two years. Comparison of results based on the procedure developed here with the more precise answers indicates this calculation is accurate to four significant figures. This is usually satisfactory for most cases of interest, particularly when use of a rapid machine procedure is desirable.

It is of interest to examine the merit of using a scale factor as a function of nuclide chain length in order to keep contributions within machine range (the use of such a scale factor was previously illustrated in the Table I results). Calculated concentrations of nuclides 15, 22 and 29 are shown in Table III, page 25, and also percent error of the results based on double-precision results. (The scale factor simply increases the size of intermediate numbers during a calculation and helps avoid loss of significance due to numbers being smaller than the minimum provided by the machine.) If significance is lost due to small numbers, then a large scale factor should yield a more accurate solution

TABLE II

COMPARISON OF SINGLE PRECISION RESULTS BASED ON PROGRAM DEVELOPED AND DOUBLE PRECISION RESULTS

NUCLIDE	SINGLE PRECISION CONCENTRATION	DOUBLE PRECISION CONCENTRATION
Pu-242	1.253777×10^{19}	1.25378×10^{19}
Pu-243	5.008289×10^{16}	5.00829×10^{16}
Am-243	7.538730×10^{18}	7.53873×10^{18}
Am-244	6.892087×10^{15}	6.89209×10^{15}
Cm-244	4.688146×10^{21}	4.68815×10^{21}
Cm-245	6.997669×10^{19}	6.99767×10^{19}
Cm-246	4.978731×10^{21}	4.97873×10^{21}
Cm-247	1.925221×10^{20}	1.92522×10^{20}
Cm-248	6.818085×10^{21}	6.81808×10^{21}
Cm-249	5.113585×10^{17}	5.11359×10^{17}
Bk-249	3.550646×10^{19}	3.55065×10^{19}
Bk-250	1.862844×10^{18}	1.86284×10^{18}
Cf-250	2.602992×10^{19}	2.60299×10^{19}
Cf-251	6.507730×10^{18}	6.50773×10^{18}
Cf-252	5.446630×10^{20}	5.44663×10^{20}
Cm-248 (α-feedback)	1.090826×10^{20}	1.09083×10^{20}
Cm-249 (α-feedback)	8.162947×10^{15}	8.16379×10^{15}
Bk-249 (α-feedback)	5.608480×10^{17}	5.60898×10^{17}
Bk-250 (α-feedback)	2.935057×10^{16}	2.93534×10^{16}
Cf-250 (α-feedback)	4.063156×10^{17}	4.06348×10^{17}
Cf-251 (α-feedback)	1.011914×10^{17}	1.01201×10^{17}
Cf-252 (α-feedback)	6.350617×10^{18}	6.35150×10^{18}

TABLE III

EFFECT OF THE VALUE OF THE SCALE FACTOR ON CALCULATED NUCLIDE CONCENTRATIONS

RANGE FACTOR	NUCLIDE IN CHAIN		
	FIFTEENTH (Last in chain)	TWENTY SECOND (First feed-back)	TWENTY NINTH (Second feed-back)
	Concentration, Atoms/barn-cm		
1.0	5.445530×10^{-4}	6.350617×10^{-6}	0.0
10^{15}	5.446631×10^{-4}	6.351580×10^{-6}	2.505349×10^{-8}
10^{20}	5.446631×10^{-4}	6.350410×10^{-6}	0.0
10^{25}	5.446631×10^{-4}	6.349974×10^{-6}	4.241724×10^{-15}
10^{30}	5.446630×10^{-4}	6.349674×10^{-6}	0.0
10^{35}[a]	5.446631×10^{-4}	6.350783×10^{-6}	0.0
Double Precision	5.44663×10^{-4}	6.35150×10^{-6}	3.45649×10^{-8}
	Error, Percent		
1.0	0.	0.14	>100.
10^{15}	0.	0.0013	27.5
10^{20}	0.	0.017	>100.
10^{25}	0.	0.024	100.
10^{30}	0.	0.029	>100.
10^{35}	0.	0.012	>100.

[a]Machine overflow occurs

than a small scale factor. The results indicate that no significance was lost for nuclide 15; that the inherent accuracy of the concentration of nuclide 22 was not within 0.02% (due to subtraction of numbers nearly identical); and that all significance for nuclide 29 was lost. Thus, attempts to use this calculational method for more than 22 nuclides failed.

These results showed that loss in significance due to inadequacies of machine range was not important in this calculation, although previously in Table I, page 20, it was shown that significant contributions can be lost if a scale factor is not used. Generally, initial concentrations should have a normalized value near unity.

There is a finite probability that repeating roots may occur. If in equation (3.4) $q_n = q_j$ for any two values, then the solution given is incorrect. However, with eight significant figures, it is very unlikely that identical roots will occur without previous knowledge of the fact. Under the latter circumstance, provision can be made as was done for the case of alpha decay above.

There is one situation which may not be treated adequately. Consider calculation of concentrations at a location in a reactor where there is fertile material but no fuel initially. Use of the explicit solution will correctly evaluate produced fuel at any time, but fission product concentrations will be underestimated. The reason is that generation rate of fission products is assumed to be constant over an interval of time based on the fuel concentration at the beginning; with continually increasing fuel concentration, generation rates are underestimated. Only with short time intervals can appreciable error be avoided. A relatively

accurate calculation is possible, however, by use of a pseudo capture rate by a fuel nuclide.

CHAPTER V

RESULTS OF CALCULATIONS

I. INTRODUCTORY DISCUSSION

Reported here are results of calculations made for seven different problems of interest. The first four problems were associated with the High-Flux-Isotope-Reactor now under construction at Oak Ridge National Laboratory; this reactor has been designed for a peak thermal flux in a central neutron flux trap. In the first problem, nuclide behavior was calculated in the fuel region for different values of time steps in order to indicate the errors resulting when finite time steps are considered. In the second problem, production of californium in the flux trap was studied. In the third and fourth problems, a study was made of the importance of fission products during a fuel cycle in which a period of shutdown occurred followed by subsequent reactor operation. In this latter problem, burn-out of samarium by low power operation was included. The fifth problem was a study of the effects of the fast neutron reactions on nuclide concentrations in a converter reactor. The sixth problem considered the sixteen route decay of U^{235} to Pb^{207}. The last calculation considered an unsteady-state chemical-processing situation involving continuous flow through reactor vessels; these vessels were arranged in series and a first order reaction was assumed to occur in each vessel.

In each case the calculation was performed with the program based on equations (3.4) and (3.6). The calculation was of the nuclide concentrations at a point for several successive time steps.

In these calculations, certain approximations were made with respect to effective reaction rates; better approximations can be readily incorporated, if the effective cross sections are known as a function of time.

From two-group steady-state reactor theory, a thermal neutron balance at a point gives:

$$\text{source} - \text{losses} = 0 \; ;$$

$$\Sigma_R \phi_1 - (\Sigma_a + D\nabla^2)\phi_2 = 0 \; .$$

This assumes there are no thermal neutrons produced in fission. For a large reactor, the leakage term, $D\nabla^2\phi_2$, is small, and so

$$\frac{\phi_1}{\phi_2} \simeq \frac{\Sigma_a}{\Sigma_R} \; . \tag{5.1}$$

Thus to a first approximation the ratio of fast to thermal flux is known. After a period of operation, Σ_a will have changed due to fuel consumption and the formation of fission products; Σ_R would not normally change significantly since it is primarily a property of the moderator. Thus the ratio of fast to thermal flux will change in accordance with the change in Σ_a during the life of the reactor. The calculations made here did not incorporate this effect, but for a specific problem where this ratio is calculated by other means, the results could be readily incorporated.

Nuclear constants used were from references 11, 12, and 15.

Based on a point model, the effective multiplication constant of a reactor as a function of fuel exposure was obtained considering a specified neutron leakage fraction. The equation used was:

$$K_{eff} = \frac{\text{summed neutron productions}}{\text{summed absorptions + leakage}} \; . \tag{5.2}$$

In sample problems below, emphasis is not always placed on the nuclide concentrations and calculation itself, but often on how nuclide concentrations contribute to reactivity. Although the reactivity calculation used here is based on a simple model, this model is often satisfactory, and can be used to illustrate the usefulness of knowing nuclide concentrations as a function of time. Also illustrated is the ability to study effects of different cross sections on relative reaction rates in a fuel mixture, and how certain chemical kinetics problems result in the same mathematical system considered here.

II. NUCLIDE CONCENTRATIONS IN HFIR CORE REGION AS A FUNCTION OF TIME; EFFECT OF LENGTH OF TIME STEP ON CALCULATED NUCLIDE CONCENTRATIONS

It was of interest to examine the effect of time step length on calculated nuclide concentrations for specific chains. Average core conditions expected in the High-Flux-Isotope-Reactor were used to estimate nuclide concentrations after operation for ten days. A thermal neutron flux of 4.0×10^{14} neutrons/sec-cm^2 and a fast flux of 3.8×10^{15} neutrons/sec-cm^2 were assumed as initial conditions; the initial U^{235} fuel concentration was 3.6×10^{-4} atoms/barn-cm. Fission products other than those treated in detail were lumped into a pseudo nuclide; five short nuclide chains were considered:

$$U^{235} \rightarrow U^{236} \rightarrow U^{237} \rightarrow Np^{237} ,$$

$$U^{235} \rightarrow I^{135} \rightarrow Xe^{135} \rightarrow ,$$

$$U^{235} \rightarrow Nd^{149} \rightarrow Pm^{149} \rightarrow Sm^{149} \rightarrow ,$$

$$U^{235} \rightarrow Nd^{151} \rightarrow Pm^{151} \rightarrow Sm^{151} \rightarrow ,$$

$$U^{235} \rightarrow \text{Lumped Fission Products} \rightarrow .$$

In the calculation, effective resonance integrals as a function of nuclide concentration were recalculated at the end of each time step. Constant fission rate was simulated by adjusting the flux levels at the end of each time step (flux level increases to compensate for fuel depletion) assuming fixed thermal to fast flux ratio.

The calculated concentrations are shown in Table IV. The calculations indicate that the error in the final U^{235} concentration is reduced from 5.5% using one time step to 0.6% for ten time steps. Similarly the error in the final Xe^{135} concentration is reduced from 39% using one time step to 3.7% using ten time steps. These results indicate that appreciable errors can be expected for calculations made with time intervals large compared with the life of a reactor core.

For values of final K_{eff}, equation (5.2) was used. An initial value of 1.16 was assumed for K_{eff}, the excess of 0.16 to be taken up by control rods which would be removed gradually to maintain a critical condition. The core leakage was based on the initial fuel loading and an aluminum to water ratio of 1.0; this leakage was assumed to remain constant relative to absorptions. No burnable poison was considered in these calculations.

III. CALIFORNIUM PRODUCTION IN THE HIGH-FLUX-ISOTOPE-REACTOR

Calculations were made of the californium production from a plutonium charge in the flux trap of the High-Flux-Isotope-Reactor. An initial set of calculations was made using pile neutron cross sections in a one-neutron-group calculation (9). Only the principal chain route was considered, with α-feedback neglected (see Table II, page 24, for

TABLE IV

POINT NUCLIDE CONCENTRATIONS AT THE END OF TEN DAY'S OPERATION
AS DETERMINED WITH SEVERAL DIFFERENT TIME INCREMENTS

NUMBER OF TIME STEPS	FINAL K_{eff}	FINAL CONCENTRATIONS OF NUCLIDES, ATOMS/BARN-CM										
		U^{235} x 10^4	U^{236} x 10^5	U^{237} x 10^7	Np^{237} x 10^7	I^{135} x 10^7	Xe^{135} x 10^9	Pm^{149} x 10^7	Sm^{149} x 10^8	Pm^{151} x 10^8	Sm^{151} x 10^8	LUMPED FISSION PRODUCTS x 10^5
1	0.9881	2.682	1.770	4.355	1.644	2.089	5.361	3.027	4.631	7.563	2.239	8.217
2	0.9922	2.619	1.894	4.636	1.698	2.089	4.644	3.027	4.005	7.563	1.934	8.195
5	0.9949	2.574	1.983	4.943	1.770	2.089	4.161	3.027	3.587	7.563	1.731	8.178
10	0.9958	2.557	2.017	5.071	1.804	2.089	3.989	3.027	3.443	7.563	1.663	8.173
20	0.9962	2.548	2.034	5.141	1.824	2.089	3.900	3.027	3.378	7.563	1.631	8.170
50	0.9964	2.542	2.045	5.185	1.837	2.089	3.845	3.027	3.344	7.563	1.615	8.168

the nuclide chain). The results displayed in Figure 1 indicate little difference in the peak Cf^{252} production for a given neutron exposure, at flux levels of 3.0×10^{15} and 5.0×10^{15}. Appreciable increase in production could be realized by an increase in flux level for a given exposure time not exceeding that associated with peak production.

Although two group cross sections are not well-known for transplutonic nuclides, estimated values were used in a second set of calculations. Results of these calculations, which show the effect of the ratio of summed fast to thermal neutron flux on Cf^{252} production, are displayed in Figure 2, page 35. The thermal neutron cross sections used in this calculation were significantly different from those used in the previous calculation; specifically, a lower absorption cross section was used for Pu^{242}. The latter value is considered to be a better value. The results shown here indicated that a high intensity of fast flux is desirable in the neighborhood of the exposed material. Uncertainties in the nuclear properties result in appreciable uncertainty in the calculated conversion, as may be noted by comparing results shown in Figure 2, page 35, with those in Figure 1.

IV. ESTIMATE OF THE Xe^{135} AND Sm^{149} CONCENTRATIONS AND THE REACTIVITY TO BE EXPECTED FOR VARIOUS HFIR OPERATING CONDITIONS

Time behavior of reactivity of a reactor may be estimated from point nuclide concentrations calculated with average core conditions. A list of calculated concentrations of the most important poisons, Xe^{135} and Sm^{149}, as a function of High-Flux-Isotope-Reactor operation is presented in Table V, page 36. Although Xe^{135} decays quickly after

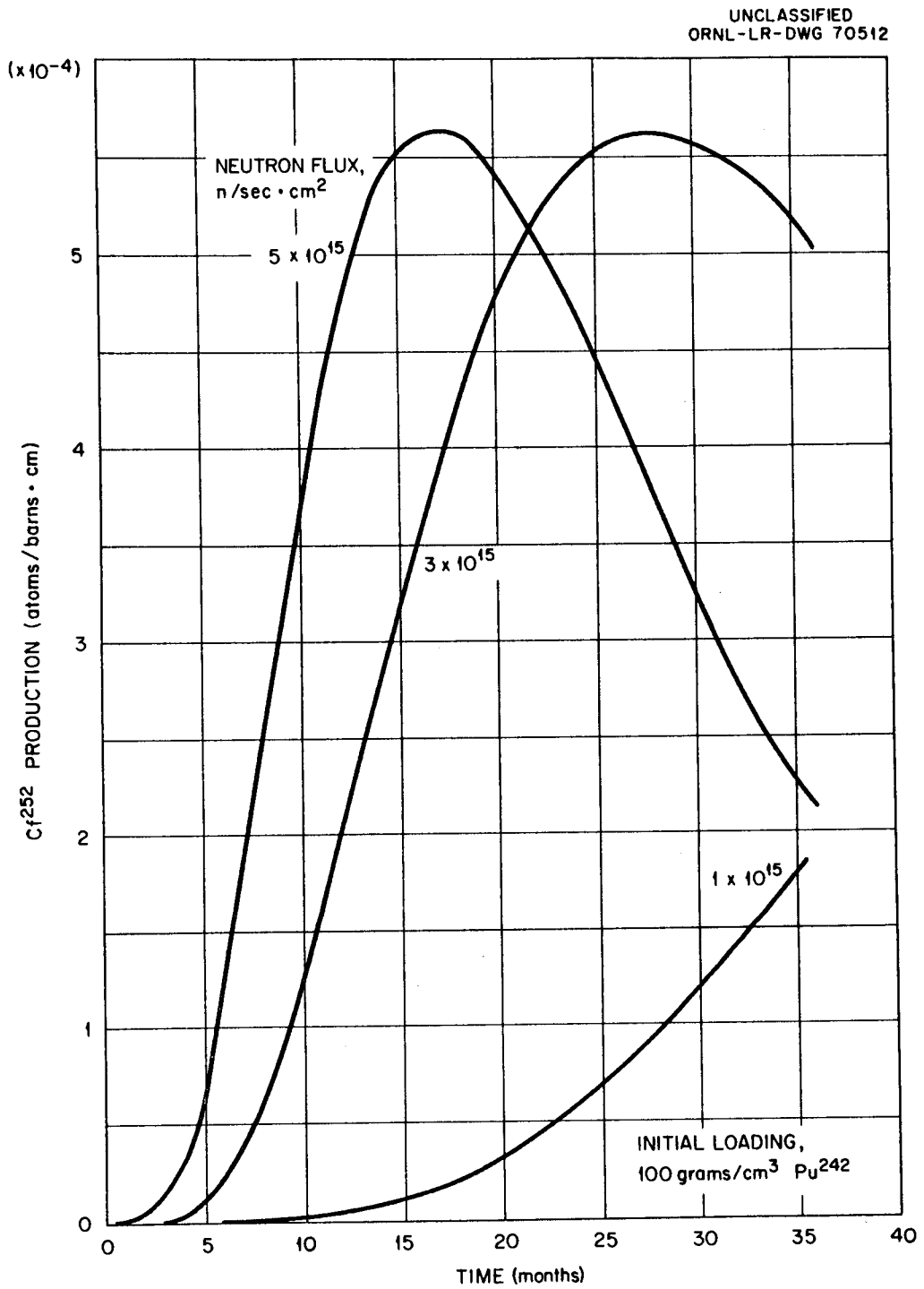

Figure 1. Californium Production in the High-Flux-Isotope-Reactor

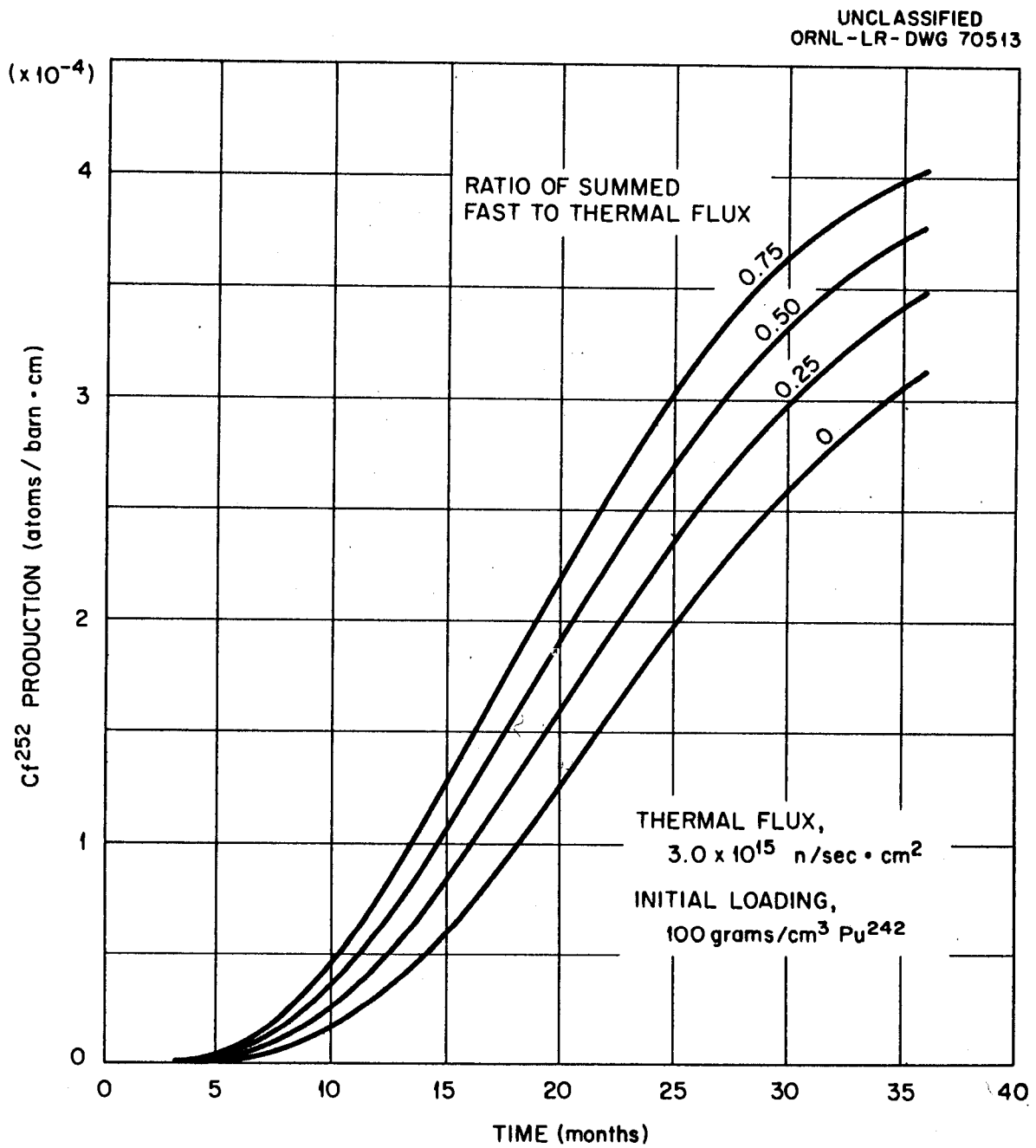

Figure 2. Dependence of Californium Production on th Ratio of Fast to Thermal Neutron Fluxes

TABLE V

CONCENTRATIONS OF IMPORTANT FISSION PRODUCTS IN THE HFIR ESTIMATED FOR SHUTDOWN AND SUBSEQUENT OPERATION

TIME AFTER SHUTDOWN, DAYS	NUCLIDE CONCENTRATION, atoms/barn-cm x 10^{10} INITIAL PERIOD OF OPERATION, DAYS					
	4		6		10	
	Xe^{135}	Sm^{149}	Xe^{135}	Sm^{149}	Xe^{135}	Sm^{149}
0.	48.25	302.4	45.18	344.8	38.93	337.3
1.	627.2	957.8	626.7	1115.	625.7	1196.
2.	155.0	1428.	154.9	1667.	154.7	1813.
3.	29.81	1765.	29.80	2063.	29.77	2254.
4.	5.264	2007.	5.262	2347.	5.257	2571.
5.	0.8956	2180.	0.8953	2551.	0.8945	2798.
6.	0.1497	2305.	0.1497	2697.	0.1496	2961.
7.	0.0248	2394.	0.0248	2801.	0.0248	3078.
8.	0.0041	2458.	0.0041	2876.	0.0041	3162.
9.	0.0007	2503.	0.0007	2930.	0.0007	3222.
10.	0.0001	2536.	0.0001	3969.	0.0001	3265.
11.	---	2560.	---	2996.	---	3296.
12.	---	2577.	---	3016.	---	3318.
13.	---	2589.	---	3030.	---	3334.
14.	---	2598.	---	3041.	---	3345.
15.	---	2604.	---	3048.	---	3353.
16.	---	2608.	---	3053.	---	3359.
17.	---	2611.	---	3057.	---	3363.
18.	---	2614.	---	3060.	---	3366.
19.	---	2615.	---	3062.	---	3369.
20.	---	2616.	---	3063.	---	3370.
(Start Operation)						
0.25	22.65	1444.	21.15	1606.	18.97	1605.
0.5	33.91	810.9	31.62	855.6	28.27	776.2
0.75	39.75	476.8	37.02	477.0	33.04	396.2
1.	42.68	306.4	39.72	292.6	35.39	228.9
1.5	45.01	191.5	41.85	202.9	37.23	139.6
2.	45.02	185.5	41.80	171.5	37.07	144.2
2.5	44.48	206.0	41.24	191.7	36.46	164.0
3.	43.78	229.6	40.53	213.7	35.72	182.8
3.5	43.03	250.2	39.77	232.3	34.94	197.8
4.	42.28	266.8	39.01	247.0	34.15	209.1

reactor shutdown, stable Sm^{149} continues to form from decay of the precursor Pm^{149}.

A partially spent core may be placed back into HFIR operation after a period of shutdown provided loss in reactivity is not excessive. Table VI indicates reactivity as a function of time during initial operation, shutdown and subsequent operation. Rapid formation of Xe^{135} causes initial loss in reactivity; significant loss to Sm^{149} occurs later. Following shutdown, the Xe^{135} concentration passes through a maximum (with which is associated a minimum reactivity) and then declines to a small value while Sm^{149} continues to form. With subsequent operation the Sm^{149} is burned out while Xe^{135} accumulates.

In these calculations the ratio of fast to thermal fluxes was assumed constant and the core leakage to absorption ratio was assumed constant. The flux levels were adjusted at the end of each time step to approximate constant-power conditions.

The results indicate that about the same total core life (actually, a slight increase in core lifetime) is achievable even though a period of shutdown occurs, provided that criticality can be achieved initially in the subsequent operation. This latter condition appears achievable after several days shutdown.

V. SAMARIUM BURNOUT OF A PARTIALLY SPENT HFIR CORE

If a HFIR-type reactor were shut down for even a short period and subsequently placed in operation, increase in neutron losses due to capture by fission products would cause significant loss in reactivity. As illustrated in Section IV, loss to Xe^{135} is particularly important

TABLE VI

RELATIVE REACTIVITY OF THE HIGH-FLUX-ISOTOPE-REACTOR AS A FUNCTION OPERATING TIME, FOLLOWED BY SHUTDOWN AND SUBSEQUENT OPERATION

TIME, DAYS	RELATIVE REACTIVITY INITIAL PERIOD OF OPERATION, DAYS		
	4	6	10
After start operation			
0.	1.1600	1.1600	1.1600
0.25	1.1318	1.1318	1.1318
0.5	1.1162	1.1162	1.1162
0.75	1.1065	1.1065	1.1065
1.	1.0998	1.0998	1.0998
1.5	1.0903	1.0903	1.0903
2.	1.0835	1.0835	1.0835
2.5	1.0774	1.0774	1.0774
3.	1.0718	1.0718	1.0718
3.5	1.0664	1.0664	1.0664
4.	1.0610	1.0610	1.0610
4.5	(Shutdown)	1.0558	1.0558
5.		1.0506	1.0506
5.5		1.0454	1.0454
6.		1.0402	1.0402
6.5		(Shutdown)	1.0349
7.			1.0296
8.			1.0188
9.			1.0007
10.			0.9962
After shutdown			
1.	0.6859	0.6586	0.6023
2.	0.9400	0.9103	0.8519
3.	1.0372	1.0068	0.9501
4.	1.0544	1.0232	0.9663
6.	1.0523	1.0199	0.9620
8.	1.0490	1.0160	0.9575
10.	1.0473	1.0140	0.9552
12.	1.0464	1.0130	0.9540
14.	1.0460	1.0125	0.9534
16.	1.0458	1.0123	0.9531
18.	1.0457	1.0121	0.9530
20.	1.0456	1.0120	0.9529
After restart operation			
0.25	1.0525	1.0273	0.9795
0.5	1.0561	1.0344	0.9902
0.75	1.0567	1.0365	0.9926
1.0	1.0557	1.0358	0.9914
2.0	1.0450	1.0244	0.9770
3.0	1.0330	1.0115	0.9618
4.0	1.0212	0.9988	0.9466

for short periods of shutdown while loss to Sm^{149} is important if the shutdown period lasts several days. These losses can be alleviated by partial burnout of Sm in an auxiliary reactor facility which provides additional reactivity.

For this case, calculations were made of burnout of Sm^{149} from a partially depleted High-Flux-Isotope-Reactor core in an auxiliary reactor facility at a power level significantly lower than that of the primary facility. The assumptions made here were identical with those of previous problems; also, the fast to thermal flux ratio in the auxiliary facility was the same as in the primary reactor. Calculations were performed considering operation for two days, shutdown for twenty days and operation of the auxiliary facility for twenty-two days; the results are shown in Table VII, and illustrate that the most desirable mode of operation of the auxiliary facility depends on the reactivity gain desired. The amount of exposure must be limited to avoid unproductive fuel consumption. The reactivity gain to be obtained by partial Sm burnout appears to be higher if the period of initial HFIR operation is longer than two days. (The results shown are not precisely consistent with those of the previous problem due to use of slightly different cross section data.)

VI. CONVERSION OF FUEL IN A LARGE REACTOR AS A FUNCTION OF FLUX RATIO

A study was made of the effect of the fast-to-thermal neutron flux ratio on the behavior of fuels in a large converter type reactor, which had a thermal neutron flux of 6.37×10^{12} n/sec-cm^2 and initial fuel concentrations (in atoms/barn-cm) of 2.0902×10^{-4} for U^{235}, 5.6903×10^{-3}

TABLE VII

SAMARIUM BURNOUT FROM A PARTIALLY DEPLETED CORE:
ESTIMATED REACTIVITY WITH TIME

TIME FROM START, DAYS	RATIO OF FLUX IN AUXILIARY FACILITY TO THAT IN PRIMARY REACTOR		
	0.01	0.02	0.05
	RELATIVE REACTIVITY		
(Start operation primary facility)			
0.	1.1600	1.1600	1.1600
0.25	1.1319	1.1319	1.1319
0.5	1.1163	1.1164	1.1164
0.75	1.1066	1.1066	1.1066
1.	1.0999	1.0999	1.0999
1.5	1.0904	1.0904	1.0904
2.	1.0836	1.0836	1.0836
(Shutdown primary facility 20 days)			
22.	1.0901	1.0901	1.0901
(Sm burnout in auxiliary facility)			
22.5	1.0836	1.0789	1.0712
23.	1.0780	1.0713	1.0633
23.5	1.0757	1.0688	1.0619
24.	1.0750	1.0684	1.0625
25.	1.0752	1.0692	1.0648
26.	1.0758	1.0704	1.0669
27.	1.0764	1.0714	1.0686
28.	1.0769	1.0724	1.0701
29.	1.0775	1.0733	1.0714
30.	1.0780	1.0741	1.0725
31.	1.0785	1.0749	1.0733
32.	1.0790	1.0757	1.0741
34.	1.0800	1.0771	1.0752
36.	1.0809	1.0783	1.0759
38.	1.0817	1.0794	1.0763
40.	1.0825	1.0804	1.0764
42.	1.0833	1.0813	1.0763
44.	1.0840	1.0821	1.0761
(Shutdown auxiliary facility 20 days)			
64.	1.1009	1.1067	1.1088
Increased reactivity over that at 22 days	0.0108	0.0166	0.0187
Fuel consumption in Auxiliary Facility	FUEL CONSUMPTION, FRACTION OF 10 DAY LIFE		
	0.022	0.044	0.110

for U^{238}, 2.5084×10^{-5} for Pu^{239}, 8.5557×10^{-6} for Pu^{240}, 5.6887×10^{-6} for Pu^{241} and 2.8262×10^{-6} for Pu^{242}. The time behavior of the nuclide concentrations is shown in Table VIII for three different levels of fast flux. Also shown in Table IX, page 43, is an estimate of the relative reactivity under the conditions studied. It is important to note that the power level is dependent on total fissions so that operation for a particular length of time at an elevated fast flux level must be associated with a higher power level.

The results indicate that there is a significant effect of fast flux level on nuclide behavior; greater conversion of fertile to fissile nuclides occurred as the ratio of fast to thermal flux increased.

VII. DECAY OF RADIOACTIVE URANIUM TO STABLE LEAD ALONG SIXTEEN POSSIBLE CHAIN ROUTES

For the actinium series the decay of U^{235} to stable Pb^{207} is shown in Figure 3, page 44. There are sixteen possible routes which end with the formation of stable lead. The results of calculations considering one original atom of U^{235} are shown in Table X, page 45. Since the calculation permits only one type of decay loss, the second type was simulated by treating it as a loss due to neutron capture utilizing a fictitious thermal flux.

This type of calculation was useful in studying the accuracy of the procedure of calculation, since the total number of atoms at any time should sum to the number at time zero. In each problem, the summed atoms equaled the initial number within the accuracy of a seven place machine edit, i.e., an error of not more than one part in 10^7. Also, as an

TABLE VIII

DEPENDENCE OF FUEL CONCENTRATION BEHAVIOR ON FAST-TO-THERMAL FLUX RATIO IN A CONVERTER REACTOR

TIME, DAYS	RATIO OF FAST FLUX TO THERMAL FLUX: 1			3			10		
	CONCENTRATION OF NUCLIDES, ATOMS/BARN-cm x 10^5								
	U^{235}	Pu^{239}	Pu^{241}	U^{235}	Pu^{239}	Pu^{241}	U^{235}	Pu^{239}	Pu^{241}
0	20.902	2.5084	0.5689	20.902	2.5084	0.5689	20.902	2.5084	0.5689
25	20.780	2.5020	0.5637	20.763	2.5341	0.5694	20.704	2.6459	0.5891
50	20.658	2.5005	0.5587	20.624	2.5705	0.5700	20.509	2.8111	0.6081
75	20.535	2.4991	0.5538	20.486	2.6064	0.5706	20.318	2.9702	0.6261
100	20.413	2.4977	0.5490	20.349	2.6416	0.5713	20.131	3.1234	0.6430
200	19.927	2.4921	0.5313	19.806	2.7768	0.5742	19.409	3.6845	0.7033
500	18.482	2.4766	0.4895	18.237	3.1316	0.5864	17.471	4.9922	0.8699
1000	16.125	2.4544	0.4514	15.802	3.5819	0.6221	14.770	6.3850	1.0705
1250	14.997	2.4448	0.4441	14.666	3.7535	0.6473	13.600	6.8512	1.1868

TABLE IX

APPROXIMATE DEPENDENCE OF REACTIVITY ON FLUX RATIO IN A CONVERTER REACTOR

	Relative Reactivity RATIO OF FAST TO THERMAL FLUX		
TIME, DAYS	1	3	10
0	1.2200	1.2200	1.2200
25	1.1909	1.1957	1.2083
50	1.1851	1.1909	1.2118
75	1.1808	1.1875	1.2157
100	1.1774	1.1846	1.2194
125	1.1743	1.1821	1.2229
150	1.1713	1.1796	1.2261
175	1.1685	1.1772	1.2289
200	1.1657	1.1749	1.2314
225	1.1629	1.1726	1.2336
250	1.1601	1.1702	1.2354
300	1.1545	1.1654	1.2384
350	1.1489	1.1607	1.2404
400	1.1433	1.1559	1.2416
450	1.1377	1.1510	1.2422
500	1.1321	1.1461	1.2422
550	1.1264	1.1412	1.2416
600	1.1207	1.1363	1.2407
650	1.1150	1.1313	1.2394
700	1.1093	1.1263	1.2378
750	1.1036	1.1213	1.2360
800	1.0978	1.1162	1.2339
850	1.0920	1.1112	1.2317
900	1.0862	1.1061	1.2292
950	1.0804	1.1010	1.2267
1000	1.0745	1.0959	1.2240
1050	1.0686	1.0908	1.2212
1100	1.0627	1.0857	1.2183
1150	1.0568	1.0806	1.2154
1200	1.0509	1.0755	1.2124
1250	1.0449	1.0704	1.2093

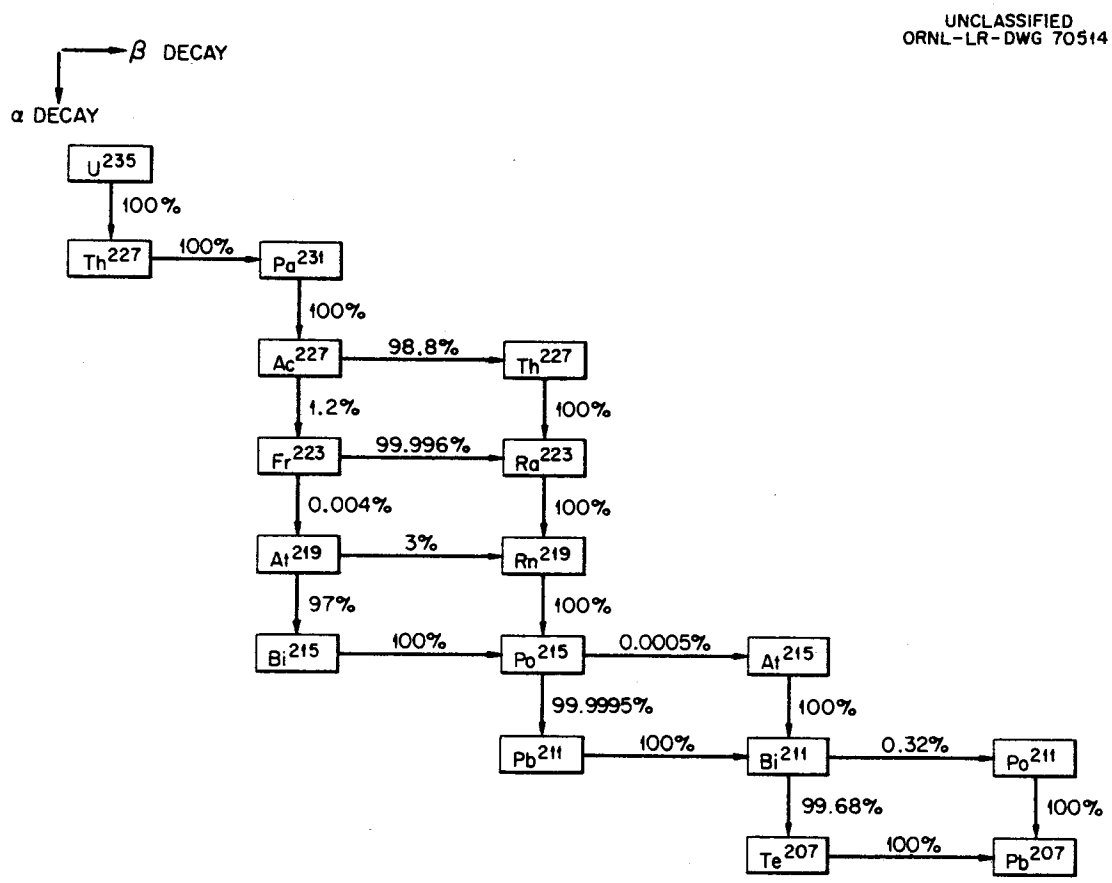

Figure 3. The Actinium Series

TABLE X

FORMATION OF PB-207 FROM DECAY OF U-235 AND RELATED RESULTS

TIME, YEARS	FRACTION ORIGINAL U^{235} DECAYED	ATOMS Pb^{207} FORMED PER ORIGINAL ATOM U^{235}	ATOMIC RATIO Pa^{231} to Ac^{227}	ATOMIC RATIO Pa^{231} to U^{235}
1	9.7205×10^{-10}	8.3788×10^{-17}	100,000	9.6794×10^{-10}
10	9.7205×10^{-9}	2.3110×10^{-14}	10,980	9.7154×10^{-9}
10^5	9.7200×10^{-5}	5.5436×10^{-5}	1,575	4.1741×10^{-5}
10^7	9.6733×10^{-3}	9.6257×10^{-3}	1,575	4.8127×10^{-5}
10^8	9.2630×10^{-2}	9.2586×10^{-2}	1,575	4.8127×10^{-5}
10^9	0.62169	0.62167	1,575	4.8127×10^{-5}
10^{10}	0.99994	0.99994	1,575	4.8127×10^{-5}

additional accuracy check for short periods, the number of atoms produced was found to equal the number of atoms of the U^{235} destroyed within the accuracy of one part in 10^7.

In dating ores it is normally assumed that all loss of U^{235} appears as Pb^{207}; it may be noted from Table X, page 45, that this simplification appears justified for periods longer than 10^7 years. Typical values reported for atomic ratios in ores (2) are:

$$\frac{Pa^{231}}{Ac^{227}} = 1560 \qquad \text{and} \qquad \frac{Pa^{231}}{U^{235}} = 4.81 \times 10^{-5}.$$

These are in substantial agreement with the calculated values.

VIII. APPLICATION TO A CHEMICAL PROCESS

The equations solved for behavior of nuclides in a reactor can be applied to certain chemical processes. For example, thoroughly mixed materials in a fixed-volume vessel can be represented by point concentrations. The equations of material balance for constant flow rates through successive vessels in which first-order reactions occur, are identical to the first order neutron chain equations.

As an example of application, a fictitious process is shown in Figure 4. Also shown are appropriate differential equations of material balance associated with fixed flow rates, fixed volumes and first order reactions. Arbitrarily assigning values to the constants, as given below, the following equations are considered:

$$\frac{dC_1}{d\theta} = 0.05 - 0.1C_1 ,$$

$$\frac{dC_2}{d\theta} = 0.06 - 0.15C_2 ,$$

UNCLASSIFIED
ORNL-LR-DWG 70515

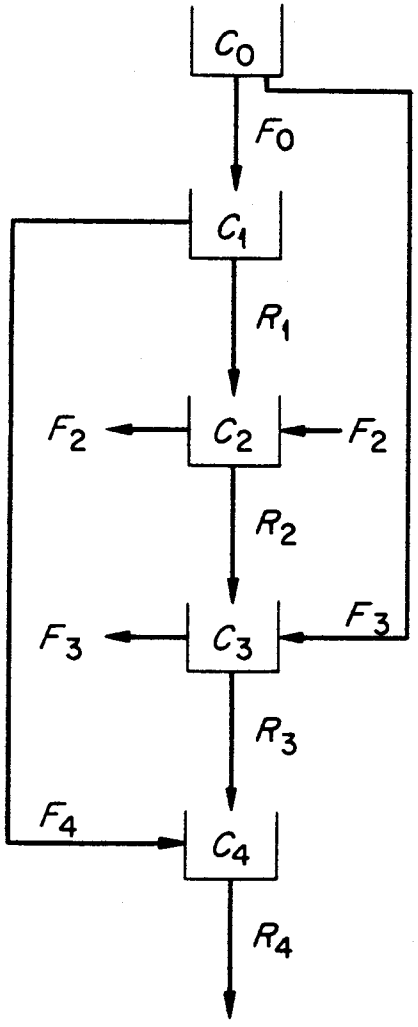

C_0=CONSTANT

$$\frac{dC_1}{d\theta} = \frac{F_0}{V_1} C_0 - \left[K_1 + \frac{R_1}{V_1} + \frac{F_4}{V_1}\right] C_1$$

$$\frac{dC_2}{d\theta} = \frac{R_1}{V_2} C_1 - \left[K_2 + \frac{R_2}{V_2} + \frac{F_2}{V_2}\right] C_2$$

$$\frac{dC_3}{d\theta} = \frac{R_2}{V_3} C_2 + \frac{F_3 C_0}{V_3} - \left[K_3 + \frac{R_3}{V_3} + \frac{F_3}{V_3}\right] C_3$$

$$\frac{dC_4}{d\theta} = \frac{R_3}{V_4} C_3 + \frac{F_1}{V_4} C_1 - \left[K_4 + \frac{R_4}{V_4}\right] C_4$$

Figure 4. Flow Diagram and Associated First Order Rate Equations for a Continuous Process of Successive Chemical Reactions

$$\frac{dC_3}{d\theta} = 0.02C_2 + 0.01 - 0.07C_3 ,$$

$$\frac{dC_4}{d\theta} = 0.13C_3 + 0.06C_1 - 0.4C_4 .$$

At steady state, the concentrations are obtained by setting $dC/d\theta = 0$, so

$$C_1(\infty) = 0.50 ,$$

$$C_2(\infty) = 0.20 ,$$

$$C_3(\infty) = 0.20 ,$$

$$C_4(\infty) = 0.14 .$$

Setting initial concentrations other than C_o to zero, time dependent concentrations are given in Table XI as obtained from machine calculations using the program developed here. The results show the time behavior of the concentrations, and the approach to steady-state conditions. Considerably more elaborate systems may be handled by the machine program.

TABLE XI

CALCULATED TIME DEPENDENT CONCENTRATIONS
FOR A FICTITIOUS CHEMICAL PROCESS

RELATIVE TIME	RELATIVE CONCENTRATION			
	C_1	C_2	C_3	C_4
0	0.	0.	0.	0.
10	0.3161	0.06852	0.07655	0.05822
20	0.4323	0.1387	0.1259	0.09878
30	0.4751	0.1746	0.1576	0.1190
40	0.4908	0.1900	0.1767	0.1292
50	0.4966	0.1962	0.1875	0.1345
60	0.4988	0.1986	0.1935	0.1372
70	0.4995	0.1995	0.1966	0.1386
80	0.4998	0.1998	0.1983	0.1393
90	0.4999	0.1999	0.1991	0.1396
100	0.5000	0.2000	0.1996	0.1398
200	0.5000	0.2000	0.2000	0.1400
1000	0.5000	0.2000	0.2000	0.1400

CHAPTER VI

SUMMARY AND CONCLUSIONS

I. SUMMARY

A practical, general procedure was developed for digital machine calculation of nuclide concentration behavior with time. This involved an explicit solution to the nuclide chain equations in a form most suitable for calculation with a limited number of significant figures. The procedure was programmed for the IBM-7090 with provision made for interlocking chains; limitations were examined by solution of a number of example problems. Study of the results indicated that the calculation is practical for application to reactor depletion problems and to other problems which can be represented by the equations.

II. CONCLUSIONS

It was found from this study that a general, explicit solution to the coupled nuclide chain equations is practical for many applications. Specifically, the solution can be used in the majority of reactor depletion problems. Using eight significant figures restricted to the range of numbers within 10^{-38} to 10^{+38} the following restrictions apply:

1. Four place accuracy in the final results can be generally expected.
2. Reliable results can not be expected for very short time intervals (very low flux exposure) nor for very long nuclide chains.

3. Some problems may require special treatment in respect to number scaling in order to retain significance.

The method used to account for contributions from several nuclide chains, even if interlocking, proved practical. Contributions from along each chain route are calculated separately and cumulated. Such calculation is possible because the differential equations considered are linear.

General application of the calculational procedure developed appears useful for reactor depletion calculations, provided it is coupled with an adequate criticality calculation to provide effective neutron reaction rates.

It was shown that certain chemical kinetics situations can be adequately represented by the chain equations considered here if special interpretation is given to the terms.

BIBLIOGRAPHY

1. H. Bateman, The Solution of Differential Equations Occurring in the Theory of Radio-Active Transformations, Proceedings of the Cambridge Philosophical Society, Vol. 15, 1910.

2. M. Benedict and T. H. Pigford, Nuclear Chemical Engineering, McGraw-Hill Book Company, Inc., New York, 1957.

3. J. M. Bookston, Reactor Material Burnout Program, General Motors Corporation (Not published), 1957.

4. S. K. Breslauer and F. P. Karriker, Isotope History Trace, Program 431, General Electric Company, XDC-60-3-211, 1960.

5. J. B. Callaghan, Turbo--A Two-Dimensional Few-Group Depletion Code for the IBM-704, Atomic Energy Commission Research and Development Report, Bettis Plant, WAPD-TM-95, 1957.

6. G. Friedlander and J. W. Kennedy, Nuclear and Radiochemistry, John Wiley and Sons, Inc., New York, 1955.

7. D. J. Hughes and J. A. Harvey, Neutron Cross Sections, BNL-325, U. S. Government Printing Office, Washington, D. C., 1955, and Supplement No. 1, 1960.

8. S. Jaye, Expire--A Reactivity Lifetime Calculation, Oak Ridge National Laboratory, CF-60-10-138, 1960.

9. M. P. Lietzke and H. C. Claiborne, Crunch--An IBM-704 Code for Calculating N Successive First-Order Reactions, Oak Ridge National Laboratory, ORNL-2958, 1960.

10. R. V. Meghreblian and D. K. Holmes, Reactor Analysis, McGraw-Hill Book Company, Inc., New York, 1960.

11. W. H. Sullivan, Trilinear Chart of Nuclear Species, J. Wiley and Sons, Inc., New York, 1945 (with subsequent additions).

12. D. R. Vondy, Nuclear Cross Sections for Two Group Reactor Calculations, Oak Ridge National Laboratory, CF-61-10-85, 1961.

13. IBM Reference Manual, 7090 Data Processing System, International Business Machines Corporation, White Plains, N. Y. (and related programming manuals), 1960.

14. Programmer's Notebook, Central Data Processing, Oak Ridge Gaseous Diffusion Plant, K-25, 1961.

15. Reactor Physics Constants, Argonne National Laboratory, University of Chicago, ANL-5800, 1958.

APPENDIXES

APPENDIX A

THE MACHINE PROGRAM FOR SOLUTION OF THE NUCLIDE CHAIN EQUATIONS

I. GENERAL

The machine program developed here calculates point nuclide concentrations at the end of each of a specified number of time intervals, considering exposure of the nuclides to two group neutron fluxes. At the end of each time step, the flux levels can be adjusted to correspond to a constant power level. The dependence of neutron resonance capture and resonance fission on nuclide concentration is taken into consideration (see Appendix D). Nuclide behavior after reactor shutdown is calculated with appropriately simplified equations. Also, nuclide behavior during operation subsequent to reactor shutdown may be calculated.

The machine calculation itself is very fast. The time required to perform the calculations associated with the sample problems described in the report proper is less than 20 minutes. The general program requires 11,000 storage locations and with some modifications can be used as a subroutine.

II. PROGRAM LIMITATIONS

The limitations of the machine program are due primarily to the storage space assigned to variables but also to the specific calculation routine. Restrictions are listed below.

A. A maximum of 99 different nuclides can be specified.

B. A maximum of 50 nuclide chains can be specified.

C. One chain can not contain more than 50 nuclides.

D. Only those nuclides numbered 1 through 10 may be fissionable.

E. Fission yield fraction from the first 5 numbered nuclides (fuels) is identical and that from fuel nuclides numbered 6 through 10 is identical.

F. Yield from thermal and fast neutron fission is assumed to be identical.

G. A library of microscopic data may be used--it need not be limited to nuclides of interest. A subsequent case will use the library from the previous case.

H. For the case of constant flux during a calculation, one change in a neutron flux or in time-step length may be made; flux levels will not be adjusted to maintain a fixed fission rate following a change in flux level. The value of the flux can not be set at zero, although a very small value can be used.

I. Fission yield of nuclides in a chain is not considered unless there is a yield associated with the first nuclide in the chain; an insignificantly small yield may be specified for the first nuclide if only the others are to have yield from fission.

J. If a nuclide in a system of chains does not have an initial concentration nor a contribution from the chain first specified, additional contributions to the nuclide in question will not be summed; this permits dummy nuclides to be used in describing complex nuclide systems. Microscopic cross sections must be specified for dummy nuclides.

K. The calculation does not account for repeated roots--if q_i values for the two nuclides in one chain are identical the result will be in error.

L. To indicate neutron multiplication effects, an input value K_{eff} is used to calculate initial leakage ÷ Absorption = (Productions ÷ Absorptions ÷ K_{eff}) - 1.0; this ratio is assumed to be fixed thereafter giving a first order approximation to the effective multiplication constant; if initial K_{eff} is not specified, leakage is assumed to be zero.

M. For very long chains and little difference in loss terms, all significance may be lost and a negative concentration may be calculated; in such an event the concentration is set to zero and reported as such.

N. If fast-neutron-group microscopic absorption and fission cross sections are specified, these values are used and resonance integral calculations are not made.

O. In a given calculation, subsequent data sets, corresponding to the first three IBM cards, may be specified and the calculation continued with the new data.

III. INPUT DATA

The following description of data for a problem is consistent with the form shown in Figure 5.

Card 1 Title card to contain reference information.

Card 2 R-Scaling factor to retain intermediate results within machine range; 10^{15} is used if not specified. If a number becomes too

KEYPUNCH INSTRUCTIONS:
Punch only those cards having data in columns 73–80

NUCY: EXPLICIT NUCLIDE CHAIN CALCULATION

Page ___ of ___
Date _____
Charge _____

IDENTIFICATION (1–72)	REFERENCE (73–80)

R	K eff	K min	ΔT Down	I0	I01	I02	I03	I04	I05	I06	N1	N2	N3	N4	N5	N6	VFOC	

I1	I2	I3	I4	I5	ΔT1	ΔT2	Φ 1,1	Φ 2,1	Φ 1,2	Φ 2,2	

Σ_f 1,1	Σ_f 2,1	Σ_f 1,2	Σ_f 2,2	Σ_s	Δ u	RDIS	

#	fn. yield 1	#	fn. yield 1	#	fn. yield 1	#	fn. yield 1	#	fn. yield 1	#	fn. yield 1	#	fn. yield 1	
#	fn. yield 2	#	fn. yield 2	#	fn. yield 2	#	fn. yield 2	#	fn. yield 2	#	fn. yield 2	#	fn. yield 2	

#in Ch	± #	± #	± #	± #	± #	± #	± #	± #	± #	± #	± #	± #	± #	± #	± #	± #	± #	

* #	N (0)	#	N (0)	#	N (0)	#	N (0)	#	N (0)	#	N (0)	

* #	$3\sigma_{tr}$ 1	$3\sigma_{tr}$ 2	σ_r	σ_a 1	σ_a 2	$\nu\sigma_f$ 1	$\nu\sigma_f$ 2	NUCLIDE
ν	σ_s	$l_a(\infty)$	$l_a(1/V)$	$l_f(\infty)$	$l_f(1/V)$	α_a	α_f	λ
#	$3\sigma_{tr}$ 1	$3\sigma_{tr}$ 2	σ_r	σ_a 1	σ_a 2	$\nu\sigma_f$ 1	$\nu\sigma_f$ 2	NUCLIDE
ν	σ_s	$l_a(\infty)$	$l_a(1/V)$	$l_f(\infty)$	$l_f(1/V)$	α_a	α_f	λ

* BLANK CARD CLOSURE REQUIRED

Figure 5. Nucy Code Input Form

large for machine storage, this information is given in the reported results and the problem should be recalculated with a smaller scaling factor.

K_{eff}--Specified initial effective multiplication constant to establish leakage/absorptions; zero leakage is used if K_{eff} does not have an input value.

K_{min}--Minimum multiplication constant; calculation is automatically stopped when K_{eff} drops below this value.

ΔT Down--Length of time step, sec., for calculation of behavior following reactor shutdown.

IO--Number of after-shutdown time step intervals to be calculated.

O1--Option to adjust flux levels to maintain fixed fission rate, exercised if zero; it must be >0 if flux levels are to be fixed. If initial specified K_{eff} is to be maintained by adjustment of nuclide concentrations N1 through N6, O1 is to be set <0; fission rate is held fixed by adjustment of flux levels and the ratio of leakage to absorption is assumed constant.

O2--Option to calculate yield from input Σ_f values, exercised only if >0; otherwise yield of fission products is calculated from fission reaction of the first 10 nuclides.

O3--Option to recalculate resonance integrals each time step, exercised only if >0 and provided I4>0.

O4--Option to output microscopic absorption and fission cross sections and decay constants used for the first time step, exercised if >0.

05--If assigned a number, concentrations of the first thirty numbered nuclides are listed on this tape to provide data which can be used for additional calculations not made here.

06--Option to adjust the ratio of fast to thermal flux in proportion to the thermal macroscopic absorption cross section, exercised if >0.

N1 through N6--Nuclides which are to be changed in concentration to maintain criticality; change in concentration is made proportional to current concentrations.

VFOC--Fraction volume of circulating system which is inside the reactor; i.e., that fraction of the total circulating volume which is exposed to the neutron flux.

Card 3 I1--Number of time steps during which the first set of data is to be used.

I2--Number of time steps associated with the second set of data (total number of time steps is I1 + I2 for reactor operation).

I3--Σ_s option: input value is used if 0, Σ_s is calculated if 1 (see Appendix D).

I4--Fast cross section option: input values are used if 0; they are calculated from resonance parameters if 1.

I5--Number of nuclide chains (MUST HAVE A VALUE).

ΔT1--Length of time interval for I1 time steps; if negative there is to be a calculation of operation following shutdown. Under the latter circumstances the first three input cards need to follow the input set, with no blank card separating data for another subsequent case.

$\Delta T2$--Length of time interval for I2 steps.

$\phi 1,1$--Fast group neutron flux.

$\phi 2,1$--Thermal group neutron flux.

$\phi 1,2$--Fast flux for I2 time steps.

$\phi 2,2$--Thermal flux for I2 time steps.

Card 4 Σ_f 1,1, Σ_f 2,1; Σ_f 1,2, Σ_f 2,2--Fixed macroscopic fission cross sections for group 1 and group 2 for two fuels--two sets of yield fraction data will be input for these two fuels.

Σ_s--Specified macroscopic fast group scattering cross section for use in calculating concentration dependence of resonance integrals.

Δu--Lethargy decrement consistent with resonance integral data (a value of 18.0 is used if left blank).

RDIS--Reciprocal disadvantage factor which is applied to the thermal neutron flux to account for depression within a fuel rod surrounded by moderator.

Cards 5 and 6--used only if Σ_f 2,1 has a value (otherwise cards not read). Product-nuclide number and value of associated yield fraction are specified; applies to first 5 nuclides if fuels, or to Σ_f 1,1 and Σ_f 2,1.

Cards 7 and 8--used only if Σ_f 2,2 has a value (otherwise cards not read). Same as cards 5 and 6 except applies to fuel nuclides 6-10 or to Σ_f 1,2 and Σ_f 2,2.

Next card set--Nuclide chain descriptions. The number of nuclides in a chain is followed by numbers of successive nuclides in the

chain: the number of a nuclide is input as a positive number if the next nuclide is produced by capture or input as a negative number if the next nuclide is produced by decay; to indicate additional contributions to a previously calculated nuclide, 100 is added to a nuclide number. The number of nuclides in a chain is input as a negative number if circulation through a loop external to the reactor is considered.

Next card set--Initial nuclide concentrations. Nuclide number and concentration, generally in atoms/barn-cm $\equiv 10^{-24}$ atoms/cm^3; this data set must be closed out with a blank card.

Next card set--Nuclear microscopic cross sections. Two cards of data are given for each nuclide to furnish two-group cross sections as indicated in the input form; this data set must be closed out with a blank card.

Remarks

In order to make a calculation based on results from a previous case, ΔT1 should be made negative in the original case input; data for the subsequent calculation consists of only the first three cards with no blank closure. Several problems may be run at one time with three blank cards effecting a normal stop. Successive cases will use a library of cross sections provided with a first set of data.

IV. CAUSES OF FAILURE TO CALCULATE

There are tests made during the course of a calculation in order to avoid erroneous results. In the event that a problem is not solved

by the machine, the input data printed out prior to the listing of results should be examined for errors or inconsistencies. In addition the following may be considered:

A. If a source term is calculated to be zero the calculation is stopped; such a stop may be caused by an improper description of a chain, by incorrect or inconsistent decay constants, microscopic cross sections, or yield-fraction input data. Also, stops occur if there is a lack of microscopic data for a specified nuclide, or if there is inconsistent specification of fuels.

B. A statement of machine overflow in the reported results indicates numbers are too large to be handled by the machine; for this case, values of nuclide concentrations, flux levels or the range factor may be too large. Also, machine overflow may stop a calculation.

APPENDIX B

SAMPLE MACHINE PROBLEM

A set of sample input for the IBM-7090 machine calculation is shown in Table XII and results from the machine calculation are given in Table XIII, page 65. The calculation is of the nuclide concentration behavior resulting from exposure of Th^{232} to a neutron flux. The input data is consistent with the discussion in Appendix A, with one line representing an IBM card of data.

Time is given in seconds; an input value of Σ_s was used; resonance integrals were recalculated at the end of each time step, and neutron flux levels were assumed constant. Three of the nuclide chains contained common nuclides and contributions were summed. Secondary effects from lumped fission products were accounted for by a chain containing two pseudo nuclides.

In review of this sample problem it is noted that for a correct description of the chains it would be necessary to identify nuclide numbered 70 in the second chain as 170 to properly cumulate contributions.

TABLE XII

SAMPLE PROBLEM INPUT DATA LISTED FROM IBM CARDS

```
PRODUCTION FROM EXPOSURE OF THORIUM                                                    01
                                1296000. 1 1     1 1                                   02
 2 1    1 82592000.   10368000.    5.0   +13 5.0    +13                               03
            1.0                     1.0       0.6        17.369                       04
59    1.0  20  .002  25  .061  56  .0113 57  .0044 76 .001    77  .001                05
                                                                                       6
58    1.0  20  .003  25  .057  56  .0076 57  .0033576 .001    77  .001                07
                                                                                       8
   9  12- 40  11- 70  16   4  17- 18  71                                               09
   9  12  40- 41- 70 116 104 117-118 171                                               10
   9  12- 40- 11  10 116 104 117-118 171                                               11
   2- 25  20                                                                           12
   3- 76- 56  26                                                                       13
   3- 77- 57  27                                                                       14
   2  58  90                                                                           15
   2  59 190                                                                           16
 12 .013                                                                               17
                                                                                       18
 4            276.                              397.                   826.95  280 U235
  2.44    12.5   239.    284.      127.    234.    .2925     .237  .309 -16280 U235
10            267.                              382.5                872.1    280 U233
 2.52   .125 E+2  850.    319.      635.    301.     .85     .954   1.33 -13280 U233
11             30.                               25.8                          280PA233
        .10  E+2 1200.     30.3                                    .293 -06280PA233
12           .374   E+2                        4.79                           280YH232
          12.5    96.6     4.50                                    .158 -17280YH232
16            70.6                            .677   E+2                       280 U234
        .11  E+2653.       62.8                     .522 -02       .879 -13280 U234
17            32.3                             3.55                           280 U236
           9.     321.     3.27                     .00648         .919 -15280 U236
18                                                                             280 U237
                                                                    .1188-05280 U237
20                                             2.28  +06                      280XE135
          4.3     .60 +05                                          2.09 -05280XE135
25                                                                             280 I135
                                                                    .287 -04280 I135
26                                             5.85  +04                      280SM149
                  3000.                                                        280SM149
27                                             4.22  +04                      280SM151
                  3.7+03                                              2.2-10  SM151
40                                              1400.                          280TH233
                  400.                                              .492 -03280TH233
41                                               1.48                          280TH234
                                                                    .333 -06280TH234
56                                                                             280PM149
                                                                    .385 -05280PM149
57                                                                             280PM151
                                                                    .700 -05280PM151
58                                             45.4                              FP233
                154.      31.                                                   FP233
59                                              61.6                             FP235
                193.      39.                                                   FP235
70                                                                             280PA234
                                                                   2.89 -05    PA234
71                                             110.                            280NP237
                                                                   9.99 -15    NP237
76                                                                             280ND149
                                                                   9.63 -05    ND149
77                                                                             280ND151
                                                                   9.63 -04    ND151
90                                             12.                            FP222222
                39.       8.                                                   FP222222
```

TABLE XIII

SAMPLE PROBLEM MACHINE EDIT OF RESULTS

```
EXPLICIT NUCLIDE CONCENTRATION CALCULATION

 PRODUCTION FROM EXPOSURE OF THORIUM

OPTIONS EXERCISED IF ZERO
    FLUX LEVEL ADJUSTED TO FIX FISSION RATE  1      YIELD FROM NUCLIDES RATHER THAN FROM INPUT SIGF -0
    RESONANCE INTEGRALS NOT RECALCULATED EACH TIME, INITIALLY  1      EACH STEP  1
    INPUT SIGS USED -0

RANGE FACTOR    1.00000E 15

STARTING CONDITIONS

FAST FLUX#  5.000000E 13 SLOW FLUX#  5.000000E 13 (FIXED NUCLIDE FLUXES EDITED)

INITIAL CONCENTRATIONS, ATOMS/BARN-CM
12  1.300000E-02 -0  0.          -0  0.          -0  0.          -0  0.          -0  0.



DESCRIPTION OF NUCLIDE CHAINS

   DECAY    CAPTURE     YIELD(1)       YIELD(2)

CHAIN NUMBER,    1
              12          0.             0.
    40                    0.             0.
              11          0.             0.
    70                    0.             0.
              16          0.             0.
               4          0.             0.
              17          0.             0.
    18                    0.             0.
              71          0.             0.

CHAIN NUMBER,    2
              12          0.             0.
              40          0.             0.
    41                    0.             0.
    70                    0.             0.
             116          0.             0.
             104          0.             0.
             117          0.             0.
   118                    0.             0.
             171          0.             0.

CHAIN NUMBER,    3
              12          0.             0.
    40                    0.             0.
    11                    0.             0.
              10          0.             0.
             116          0.             0.
             104          0.             0.
             117          0.             0.
   118                    0.             0.
             171          0.             0.

CHAIN NUMBER,    4
    25                    6.100000E-02   5.700000E-02
              20          2.000000E-03   3.000000E-03

CHAIN NUMBER,    5
    76                   10.000000E-04  10.000000E-04
    56                    1.130000E-02   7.600000E-03
              26          0.             0.

CHAIN NUMBER,    6
    77                   10.000000E-04  10.000000E-04
    57                    4.400000E-03   3.350000E-03
              27          0.             0.

CHAIN NUMBER,    7
              58          0.             1.000000E 00
              70          0.             0.

CHAIN NUMBER,    8
              59          1.000000E 00   0.
             190          0.             0.
```

TABLE XIII (continued)

CALCULATED MICROSCOPIC CROSS SECTIONS INITIALLY

NUCLIDE	SIGA(1)	SIGA(2)	SIGF(1)	SIGF(2)	LAMDA
4	3.011112E 01	3.970000E 02	2.078416E 01	3.389139E 02	3.090000E-17
10	6.730382E 01	3.825000E 02	5.388911E 01	3.460714E 02	1.330000E-13
11	7.083309E 01	2.580000E 01	-0.	0.	2.930000E-07
12	1.465082E 00	4.790000E 00	0.	0.	1.580000E-18
16	4.121135E 01	6.770000E 01	-0.	0.	8.790000E-14
17	1.866947E 01	3.550000E 00	-0.	0.	9.190000E-16
18	-0.	-0.	-0.	0.	1.188000E-06
20	3.454430E 03	2.280000E 06	-0.	0.	2.090000E-05
25	-0.	-0.	-0.	0.	2.870000E-05
26	1.727215E 02	5.850000E 04	-0.	0.	-0.
27	2.130232E 02	4.220000E 04	-0.	0.	2.200000E-10
40	2.302954E 01	1.400000E 03	-0.	0.	4.920000E-04
41	-0.	1.480000E 00	-0.	0.	3.330000E-07
56	-0.	-0.	-0.	0.	3.850000E-06
57	-0.	-0.	-0.	0.	7.000000E-06
58	1.065116E 01	4.540000E 01	-0.	0.	-0.
59	1.335713E 01	6.160000E 01	-0.	0.	-0.
70	-0.	-0.	-0.	0.	2.890000E-05
71	-0.	1.100000E 02	-0.	0.	9.990000E-15
76	-0.	-0.	-0.	0.	9.630000E-05
77	-0.	-0.	-0.	0.	9.630000E-04
90	2.705970E 00	1.200000E 01	-0.	0.	-0.

TIME STEP# 1 TIME# 2.592000E 06

NUCLIDE CONCENTRATIONS, ATOMS/BARN-CM

4	2.713321E-10	10	3.074228E-06	11	7.334863E-06	12	1.298947E-02	16	5.779725E-08	17	1.145202E-12	18	0.
20	0.	25	0.	26	0.	27	0.	40	8.255942E-09	41	1.019664E-09	56	0.
57	0.	58	0.	59	0.	70	1.164912E-11	71	0.	76	0.	77	0.
90	0.	0	0.	0	0.	0	0.	0	0.	0	0.	0	0.

MACROSCOPIC CROSS SECTION, CM-1, EFFECTIVE THERMAL

ABSORPTION, 8.331709E-02

PRODUCTION(NUSIGF), 0.309875E-02

RATIO PRODUCTIONS TO ABSORPTION+LEAKAGE, 3.719230E-02

TIME STEP# 2 TIME# 5.184000E 06

NUCLIDE CONCENTRATIONS, ATOMS/BARN-CM

4	1.957845E-09	10	9.734982E-06	11	1.072830E-05	12	1.297894E-02	16	2.036077E-07	17	9.927653E-12	18	5.168510E-15
20	2.731134E-11	25	1.221105E-10	26	1.798936E-10	27	1.253657E-10	40	8.249818E-09	41	1.449461E-09	56	1.373378E-10
57	3.820826E-11	58	1.587749E-07	59	1.258741E-11	70	1.665937E-11	71	5.964284E-15	76	6.384566E-13	77	6.384566E-14
90	5.770858E-10	0	0.	0	0.	0	0.	0	0.	0	0.	0	0.

MACROSCOPIC CROSS SECTION, CM-1, EFFECTIVE THERMAL

ABSORPTION, 8.663499E-02

PRODUCTION(NUSIGF), 0.981120E-02

RATIO PRODUCTIONS TO ABSORPTION+LEAKAGE, 1.132476E-01

TABLE XIII (continued)

```
TIME STEP#     3 TIME#  1.555200E 07

NUCLIDE CONCENTRATIONS, ATOMS/BARN-CM
 4  3.981207E-08 10  4.233997E-05 11  1.348528E-05 12  1.293692E-02 16  1.417159E-06 17  5.619905E-10 18  4.307606E-13
20  8.647324E-11 25  3.866275E-10 26  5.707162E-10 27  3.992897E-10 40  8.223671E-09 41  1.748441E-09 56  4.348763E-10
57  1.209774E-10 58  2.143143E-06 59  3.701800E-10 70  2.014528E-11 71  1.630055E-12 76  2.021473E-12 77  2.021473E-13
90  3.407249E-08  0  0.            0  0.            0  0.            0  0.            0  0.            0  0.

MACROSCOPIC CROSS SECTION, CM-1, EFFECTIVE THERMAL

ABSORPTION,  1.016722E-01

PRODUCTION(NUSIGF),  0.426647E-01

RATIO PRODUCTIONS TO ABSORPTION+LEAKAGE,  4.196297E-01


AFTER SHUT-DOWN BEHAVIOR

TIME STEP#     1 TIME AFTER SHUT-DOWN,  1.296000E 06

CONCENTRATIONS, A/BC
   4  3.98121E-08  10  4.66033E-05  11  9.23020E-06  12  1.29369E-02  16  1.41780E-06  17  5.61991E-10  18  9.23794E-14
  20  2.60146E-21  25  2.71408E-26  26  1.03464E-09  27  5.20311E-10  41  1.13559E-09  56  2.97514E-12  57  1.39160E-14
  58  2.14314E-06  59  3.70180E-10  70  1.32374E-11  71  1.96844E-12  90  3.40725E-08

EFFECTIVE THERMAL MACROSCOPIC CROSS SECTIONS, ABSORPTION   1.030418E-01 PRODUCTION(NUSIGF)   4.695712E-02

SUMMED ABSORPTIONS,  5.152088E 12 AND PRODUCTIONS,  2.347856E 12

RATIO PRODUCTIONS TO ABSORPTION+LEAKAGE,  4.557096E-01
```

APPENDIX C

CIRCULATING FLOW

I. GENERAL DISCUSSION

The object of this part of the study was to examine those equations which describe nuclide concentration behavior in circulating systems. Approximations were established which allow the machine program developed to be used for certain situations. Specifically, flow through an external circuit was considered in conjunction with passage through a reactor proper with either complete mixing or slug-type flow. Nuclide concentration behavior in laminar flow through a pipe was also studied. Certain physical systems were examined to determine conditions which must be satisfied in order that the nuclide chain equations might be applicable.

In circulating fluid fueled reactors, a particular vessel or loop system has a characteristic flow pattern which must be known if concentrations are to be established. This flow pattern can be expected to change with time if the flow rate is not constant.

Slug flow is characteristic of a high flow rate through a channel of restricted size; a particle makes passage on the average in the transit time of the fluid, i.e., the volume divided by the volumetric flow rate. Complete mixing is also characteristic of many physical situations. Attention will be given here to slug flow and to complete mixing. Many situations may be approximated by a combination of the two.

Steady-state equations applicable after long-time operation are included along with the mathematical development given here; although not specifically applicable, such expressions are useful to check reliability of approximations and for obtaining limiting conditions.

II. MATHEMATICAL SYSTEM ASSOCIATED WITH EXTERNAL CIRCUIT

It will be assumed that the circuit external to a reactor vessel is exposed to such low neutron flux level that neutron reactions there can be neglected, and that loss of nuclides occurs only through radioactive decay.

For slug flow, a control volume of fluid will be followed through the system. For this condition,

Accumulation = Gains - Losses.

This can be expressed by the equation:

$$\frac{d[VN_i(\theta)]}{d\theta} = -\lambda_i N_i(\theta)V + \lambda_{i-1}N_{i-1}(\theta)V + \text{Feed} - \text{Removal}. \qquad (C.1)$$

The first term is the rate of accumulation of nuclide i, the second term the rate of decay and the third term the rate of generation from a precursor. Also indicated are contributions from side streams.

Study of this equation applied to specific systems indicated that a useful generalization for the situation of side streams was not possible. Any particular situation would usually require individual study.

In the most elemental situation of slug flow with no precursors nor side streams, and fixed volume, equation (C.1) reduces to:

$$\frac{dN_i(\theta)}{d\theta} = -\lambda_i N_i(\theta).$$

This equation has the solution:

$$N_i(\tau + t_L) = N_i(\tau)e^{-\lambda_i t_L} , \tag{C.2}$$

where t_L is the loop transit time, τ is some reference time.

Inclusion of a precursor leads to the general chain equation treated in the main body of this study.

The average concentration in the external circuit is given by:

$$\overline{N_i}\ (\text{loop}, \tau) = \frac{1}{t_L}\int_0^{t_L} N_i(\tau)e^{-\lambda_i \theta}\, d\theta \ ;$$

$$\overline{N_i}\ (\text{loop}, \tau) = N_i(\tau)\left[\frac{1-e^{-\lambda_i t_L}}{t_L \lambda_i}\right] . \tag{C.3}$$

With constant flow rate and complete mixing in a fixed external volume with no side streams, the appropriate equation is:

$$\frac{dN_i(\theta)}{d\theta} = \frac{1}{t_x} N_i(I) - 2_i N_i(\theta) + \lambda_{i-1} N_{i-1}(\theta) - \frac{1}{t_x} N_i(\theta) \ . \tag{C.4}$$

Here t_x is the transit time and $N_i(I)$ is the inlet concentration. For no precursor and constant inlet concentration, the solution is:

$$N_i(\tau + t) = N_i(\tau)e^{-(\frac{1}{t_x} + \lambda_i)t} + \left(\frac{1}{1 + \lambda_i t_x}\right) N_i(I)\left[1 - e^{-(\frac{1}{t_x} + \lambda_i)t}\right] . \tag{C.5}$$

After a long time, steady state conditions are approached, $N_i(\tau) \rightarrow N_i(\tau+t)$, and

$$N_i(\infty) \rightarrow \frac{N_i(I)}{1+\lambda_i t_x} . \tag{C.6}$$

The average concentration in the external system with complete mixing is, of course, equal to the concentration of the exit stream from the external system.

The above results are used in the following sections.

III. REACTOR SYSTEM WITH EXTERNAL LOOP

Both short-term and long-term behavior of nuclide concentrations may be of interest. There are two important considerations which should be given to short-term analysis: (1) start of reactor operation is generally associated with a low power level which increases with time, and (2) the concentration of a nuclide at the reactor core entrance depends on flow conditions. Only after time t_L is the return concentration from a loop, in which there is slug flow, given by $N_i(\text{exit}) \times \exp(-\lambda_i t_L)$. (Flow rates are normally established before appreciable power is generated.)

Study of applicable short-term equations revealed no practical generalizations. Expressions describing a particular situation of interest must likely be resolved by finite difference calculations.

For long-term behavior, the applicable equation for complete mixing in the core and constant, slug flow in the loop, can be written in the form:

$$\frac{dN_i(\theta)}{d\theta} = - A_i(\theta)N_i(\theta) + B_i(\theta) + \frac{1}{t_c} N_i(\theta - t_L)e^{-\lambda_i t_L} , \qquad (C.7)$$

where $A_i(\theta)$ is a loss term and $B_i(\theta)$ a generation term.

Solutions were obtained to equation (C.7), but not reported here, by the use of Laplace transforms; the results were dependent upon the

initial conditions and upon the behavior early in the cycle. These solutions could not be simplified to recognized closed forms and appeared impractical for long-term calculations.

In certain cases it is possible to integrate equation (C.7) in an approximate manner. For example, assume that $N_i(\theta)$ is a slowly varying function which will permit $N(\theta-t_L)$ to be approximated by the first two terms of a Taylor series expansion; then,

$$N_i(\theta-t_L) \simeq N_i(\theta) - t_L \frac{dN_i(\theta)}{d\theta} \quad . \tag{C.8}$$

Substitution of (C.8) into (C.7) gives:

$$\frac{dN_i(\theta)}{d\theta} = \left[\frac{-A_i(\theta) + \frac{1}{t_c} e^{-\lambda_i t_L}}{1 + \frac{t_L}{t_c} e^{-\lambda_i t_L}}\right] N_i(\theta) + \frac{B_i(\theta)}{1 + \frac{t_L}{t_c} e^{-\lambda_i t_L}} \quad . \tag{C.9}$$

Equation (C.9) has the same form as (3.4) which was utilized in the machine calculations. Thus, with special interpretation of the constants, the machine program can be used. If $B_i(\theta)$ is not time dependent, the solution becomes:

$$N(\tau+t) = N(\tau)\, e^{-\frac{C_1 t}{C_2}} + \frac{B_i}{C_1}\left[1 - e^{-\frac{C_1 t}{C_2}}\right], \tag{C.10}$$

where $C_1 = A_i - \frac{1}{t_c} e^{-\lambda_i t_L}$, A_i constant,

and $C_2 = 1 + \frac{t_L}{t_c} e^{-\lambda_i t_L}$.

For long time behavior, equation (C.10) reduces to the correct form as given by equation (C.11):

$$N_i(\infty) \rightarrow \left[\frac{G_i + \frac{1}{t_F} N_i(F)}{\lambda_i + L_i + \frac{1}{t_F} + \frac{1}{t_c}\left(1 - e^{-\lambda_i t_L}\right)} \right]. \qquad (C.11)$$

Here G_i is a generation term, L_i is a loss term, $N_i(F)$ is an external feed concentration and t_F is the core volume divided by the external feed rate. It has been assumed that removal from the core occurs at the feed rate.

For slug flow through the reactor as well as the loop system, the equation which applies to a control volume followed through the reactor with no precursor is:

$$\frac{dN_i(\theta)}{d\theta} = G_i(\theta) - \left[\lambda_i + A_i(\theta)\right] N_i(\theta) \ . \qquad (C.12)$$

Here G_i is the generation rate per unit volume and A_i is the loss term from neutron absorption. Assuming these terms to be constant, the solution is given by the relationship:

$$N_i(\text{exit},t) = N_i(\text{exit}, t-t_R)\, e^{-[\lambda_i t_L + (\lambda_i + A_i)t_c]} + \frac{G_i}{\lambda_i + A_i}\left[1 - e^{-(2_i + A_i)t_c}\right] . \qquad (C.13)$$

Here $t_R = t_L + t_c$ and "exit" refers to core exit.

Equation (C.13) compares with the general solution used for machine calculations, but special interpretation of terms is necessary. Further, the average concentration in the reactor is that of most interest for nuclear calculations; it was found for steady state conditions to be given by:

$$\bar{N}(\text{reactor}, \infty) = \left(\frac{G_i}{\lambda_i + A_i}\right)\left\{1 - \left(\frac{1-e^{-(\lambda_i+A_i)t_c}}{t_c(\lambda_i+A_i)}\right)\left(\frac{1-e^{-\lambda_i t_L}}{e^{(\lambda_i+A_i)t_c} - e^{-\lambda_i t_L}}\right)\right\}. \tag{C.14}$$

Special programs are required to solve such equations.

IV. GROSS ANALYSIS

If the core and external system are lumped into a single system assumed to undergo complete mixing, the material balance takes the following form:

$$\frac{V dN_i(\theta)}{d\theta} = -\lambda_i V N_i(\theta) - A_i V_c N_i(\theta) - R_R N_i(\theta) + R_F N_i(F) + G_i V_c + \lambda_{i-1} V N_{i-1}(\theta) , \tag{C.15}$$

where R_F is the feed rate from an external source,

R_R is a removal rate from the system,

V is the total system volume,

V_c is the core volume.

Let $f_c = V_c/V$,

$t_R = V_c/R_R$,

$t_F = V_c/R_F$,

equation (C.15) then becomes

$$\frac{dN_i(\theta)}{d\theta} = -\left(\lambda_i + A_i f_c + \frac{f_c}{t_R}\right)N_i(\theta) + \frac{f_c}{t_F} N_i(F) + G_i f_c + \lambda_{i-1} N_{i-1}(\theta) . \tag{C.16}$$

Comparing equation (C.16) with the nuclide chain equation (3.1) solved in this study for machine calculations, it is seen that it is

only necessary to adjust the constants for the two systems to be mathematically equivalent. Here it was assumed that events which occur in the core and the external system happen simultaneously, neglecting the spacial separation. For many situations this approximation may give satisfactory results for long time behavior. If $N_i(F)$ is a function of $N_i(\theta)$, such dependence may be accounted for. For example, if $N_i(F) = CN_i(\theta)$ (as might be the case where chemical processing removes nuclide i), the appropriate equation is:

$$\frac{dN_i(\theta)}{dt} = -\left(\lambda_i + A_i f_c + \frac{f_c}{t_R} + \frac{Cf_c}{t_F}\right) N_i(\theta) + G_i f_c + \lambda_{i-1} N_{i-1}(\theta) \ . \tag{C.17}$$

At long times when the i-1 nuclide concentration approaches some steady state value, the applicable solution is given by:

$$N_i(\infty) \rightarrow \left[\frac{G_i f_c + \lambda_{i-1} N_{i-1}(\infty)}{\lambda_i + A_i f_c + \frac{f_c}{t_R} + \frac{Cf_c}{t_F}}\right] . \tag{C.18}$$

With no precursor and $N_i(F)$ constant the appropriate expression is:

$$N_i(\infty) \rightarrow \left[\frac{G_i + \frac{1}{t_F} N_i(F)}{\frac{\lambda_i}{f_c} + A_i + \frac{1}{t_R}}\right] . \tag{C.19}$$

V. LAMINAR FLOW IN A PIPE

For most situations of interest, the flow through equipment is turbulent with a velocity profile which is nearly flat. Even at high

flow rate, however, there is retention of fluid at the surface, and the assumption of slug-type flow is not quantitative. Thus, there is interest in the situation of laminar flow, especially because this considers the limiting case of maximum velocity gradient at location of high velocity. The analysis presented here does not have direct application to the results of the primary study made but is included as an interesting aspect of some importance.

Consider laminar flow through a pipe and neglect diffusional transport. The velocity distribution is related to the radial location:

$$v = v_{max} \left[1 - \left(\frac{r}{R}\right)^2 \right] ,$$

$$\bar{v} = \frac{1}{A} \int_{Area} v \, dA = \frac{1}{2} v_{max} .$$

At some radial location, the concentration of nuclide i may be calculated from a material balance on a control volume followed along the pipe; this balance is

$$\frac{d}{d\theta} \left[VN_i(\theta) \right] = - \lambda_i VN_i(\theta) + G_i V + \lambda_{i-1} VN_{i-1}(\theta) ; \qquad (C.20)$$

$$\int d \left[VN_i(\theta) \, e^{\lambda_i \theta} \right] = \int \left[G_i V + \lambda_{i-1} VN_{i-1}(\theta) \right] e^{\lambda_i \theta} \, d\theta,$$

$$N_i(\tau+t) = \frac{V_1}{V_2} N_i(\tau) e^{-\lambda_i t} + \frac{e^{-\lambda_i(\tau+t)}}{V_2} \int_{\tau}^{\tau+t}$$

$$\left[G_i V + \lambda_{i-1} VN_{i-1}(\theta) \right] e^{\lambda_i \theta} \, d\theta .$$

The transit time is inversely proportional to the velocity:

$$t_L = L/\bar{v} = 2L/v_{max} ,$$

$$t = \frac{t_L}{2[1 - (\frac{r}{R})^2]} .$$

Assume that the inlet concentration is varying with time but uniform over the entrance area. Material leaving at $\tau + t_L$ entered at time $\tau + t_L$ less transit time, or $\tau + at_L$ where:

$$a = \frac{1 - 2(\frac{r}{R})^2}{2 - 2(\frac{r}{R})^2} .$$

The equation of interest becomes:

$$N_i(\tau+t_L,r) = \frac{V_1}{V_2} N_i(\tau+at_L)\, e^{-\lambda_i t} + \frac{e^{-\lambda_i(\tau+t)}}{V_2} \int_\tau^{\tau,t} \left[G_i V + \lambda_{i-1} V N_{i-1}(\theta)\right] e^{\lambda_i \theta}\, d\theta ;$$

$$\overline{N_i}\,(\tau+t_L) = \frac{1}{\bar{v}\,A} \int_{area} N_i(\tau+t_L,r)\, v\, dA ,$$

$$\overline{N_i}\,(\tau+t_L) = \frac{4}{R^2} \int_o^R \left\{ \frac{V_1}{V_2} N_i(\tau+at_L)\, e^{-\lambda_i t} + \frac{e^{-\lambda_i(\tau+t)}}{V_2} \int_\tau^{\tau+t} \left[G_i V + \lambda_{i-1} V N_{i-1}(\theta)\right] e^{\lambda_i \theta}\, d\theta \right\} r\left[1-(\frac{r}{R})^2\right] dr , \tag{C.21}$$

$$\text{where } t = \frac{t_L}{2\left[1-(\frac{r}{R})^2\right]} . \tag{C.22}$$

At constant density in a uniform pipe and nuclide generation at a constant rate:

$$\overline{N_i}\ (\tau+t_L) = \frac{4}{R^2}\int_o^R \left\{\left[N_i(\tau+at_L) - \frac{G_i}{\lambda_i}\right] e^{\frac{-\lambda_i\ t_L}{2\left[1-\left(\frac{r}{R}\right)\right]^2}}\right.$$

$$\left. + \frac{G_i}{\lambda_i}\right\} r\left[1 - \left(\frac{r}{R}\right)^2\right] dr\ .$$

Let $x = \left[1 - \left(\frac{r}{R}\right)^2\right]$,

$$-\frac{R^2}{2}\,dx = rdr;\ r = 0,\ x = 1;\ r = R,\ x = 0;$$

$$\overline{N_i}\ (\tau+t_L) = 2\int_o^1 \left\{\left[N_i(\tau+at_L) - \frac{G_i}{\lambda_i}\right] e^{\frac{-\lambda_i t_L}{2x}} + \frac{G_i}{\lambda_i}\right\} xdx\ .$$

For constant inlet concentration,

$$\overline{N_i}\ (\tau+t_L) = 2\left\{N_i(o) - \frac{G_i}{\lambda_i}\right\}\int_o^1 xe^{\frac{-\lambda_i t_L}{2x}}\,dx + 2\,\frac{G_i}{\lambda_i}\int_o^1 xdx\ ,$$

$$\overline{N_i}\ (\tau+t_L) = 2\left\{N_i(o) - \frac{G_i}{\lambda_i}\right\} E_3\left(\frac{\lambda_i t_L}{2}\right) + \frac{G_i}{\lambda_i}\ , \qquad (C.23)$$

where $E_3(a) = \int_1^\infty \frac{e^{-as}ds}{s^3}$, and is a tabulated function.

For a uniform velocity distribution, or slug flow, the result for the situation of simple decay and constant generation rate is:

$$\frac{dN_i(\theta)}{d\theta} = \lambda_i N_i(\theta) + G_i\ ;$$

$$N_i(\tau+t) = N_i(\tau)\ e^{-\lambda_i t} + \frac{G_i}{\lambda_i}\left[1 - e^{-\lambda_i t}\right];$$

Therefore,

$$\frac{N_i(\tau+t_L)\ \text{laminar}}{N_i(\tau+t_L)\ \text{slug}} =$$

$$\frac{\left[N_i(o) - \frac{G_i}{\lambda_i}\right] 2E_3\left(\frac{\lambda_i t_L}{2}\right) + \frac{G_i}{\lambda_i}}{\left[N_i(o) - \frac{G_i}{\lambda_i}\right] e^{-\lambda_i t_L} + \frac{G_i}{\lambda_i}} \quad . \tag{C.24}$$

Only if $\lambda_i t_L$ is small does this ratio approach one. Radial diffusion would be expected to cause the exit concentration to be more nearly that for slug flow than predicted by an analysis of laminar flow.

APPENDIX D

EQUATIONS FOR CORRELATION OF CONCENTRATION-DEPENDENT RESONANCE INTEGRALS

To take into account the dependence of resonance integrals on concentration, an elementary correlation was used for both absorption and fission. Resonance integrals are considered to be made up of a (1/v) contribution which is not dependent on concentration of the nuclide and a second contribution which is dependent on the macroscopic scattering cross section, the nuclide concentration and the infinite dilution resonance integral. The equations used are:

$$\sigma_1 \Delta u = I = I(1/v) + 2I(\infty)\left[\sqrt{C(1 + C)} - C\right], \qquad (D.1)$$

where $C = \alpha\, \Sigma_s/N_i\, I(\infty)$ and α is a correlating parameter.

The result is protected from error introduction by setting $I = I(1/v) + I(\infty)$ if C is calculated to be >100.

APPENDIX E

IDENTIFICATION OF SYMBOLS

A Absorption reaction rate of neutrons, also a loss term

B Conversion factor

C Constant, used repeatedly for convenience

E Exponential integral

F Calculated factor defined for convenience

(F) Related to feed

G Generation rate (source term)

(I) Related to inlet

I Resonance integral

K Multiplication constant

L Leakage rate of neutrons, or a loss term

N Atomic density, usually in 10^{-24} atoms/cm^3

P Production rate of neutrons

R Scale factor used to keep numbers within machine range, side stream flow rate or pipe radius

T Elapsed time

V Volume

Y Nuclide yield rate from fission

a Constant, arbitrary

b Constant, arbitrary, or units of barns

c Constant, arbitrary

d Total derivative

e 2.71828...

f	Fraction of transit time
n	Index
(o)	Initial condition, usually in time
q	Sum of removal contributions for a nuclide
r	Radial location in pipe
s	Source term for nuclide production rate
t	Time interval under study, or transit time through a system if subscripted
u	Lethargy
v	Velocity
x	Arbitrary measurement of length in direction of flow; also used to indicate a product
y	Fraction fission yield
α	Constant, specified
γ	Constant, specified
δ	Small change in
ϵ	Convergence criteria, specified
θ	Time
λ	Radioactive decay constant for an nuclide, $(\ell n\ 2)/(\text{half-life})$
ν	Neutrons produced per neutron causing fission in fuel
σ	Microscopic cross section
τ	Time, arbitrary reference
ϕ	Neutron flux at specified reactor power
$\sum$	Summation
Σ	Macroscopic cross section

$\prod$ Product of a set of terms

∇^2 Laplacian operator

Δ Finite difference in

$\sim$ Approximately

$\simeq$ Approximately equal to

∞ At long time or infinitesimal concentration

$\int$ Integral

$\rightarrow$ Approaches

$>$ Greater than

Subscripts

a Absorption

c Capture or core

e Effective

f Fission

F Related to side stream

g Group (neutron)

i A particular nuclide

j Particular item of a set

k Particular item of a set

L Loop

m Index

n General item of a set

o Initial

R Related to side stream; also used to indicate neutron removal

S	Scatter
t	Total (as, total circuit)
x	Related to side stream
1	Fast group, or subscript on a constant
2	Thermal group or subscript on a constant
tr	Transport

Remarks

A bar over a quantity or symbol indicates some effective, weighted mean; e.g., $\bar{\Phi}_2$ is the effective average thermal neutron flux.

HFIR is used as an abbreviation to identify the High-Flux-Isotope-Reactor currently under construction at the Oak Ridge National Laboratory (ORNL).

IBM refers to the International Business Machine Corporation and IBM-7090 to a model of a high-speed digital computer.

The term "barn" is used to avoid large exponents; microscopic cross sections are normally given in units of barns $\equiv 10^{-24}$ cm^2; these are used in conjunction with concentrations in atoms/barn-cm to give a product (macroscopic cross section) in units of atoms/cm.

Internal Distribution

1. L. G. Alexander
2. V. E. Anderson (K-25)
3. S. E. Beall
4. M. Bender
5. L. L. Bennett
6. A. L. Boch
7. R. B. Briggs
8. R. S. Carlsmith
9. W. L. Carter
10. R. D. Cheverton
11. H. C. Claiborne
12. A. L. Colomb
13. R. R. Coveyou
14. C. W. Craven
15. J. G. Delene
16. A. C. Downing
17. J. R. Engel
18. T. B. Fowler
19. A. P. Fraas
20. E. H. Gift
21. D. R. Gilfillan
22. E. E. Gross
23. P. N. Haubenreich
24. A. S. Householder
25. D. B. Janney
26. W. H. Jordan
27. P. R. Kasten
28. W. E. Kinney
29. J. A. Lane
30. M. P. Lietzke
31. J. L. Lucius
32. R. N. Lyon
33. H. G. MacPherson
34. W. D. Manly
35. B. Maskowitz (K-25)
36. A. J. Miller
37. E. A. Nephew
38. C. W. Nestor, Jr.
39. C. E. Newlon (K-25)
40. P. F. Pasqua
41. A. M. Perry
42. P. H. Pitkanen
43. C. A. Preskitt
44. B. E. Prince
45. M. W. Rosenthal
46. T. H. Row
47. J. E. Rowe (K-25)
48. H. W. Savage
49. A. W. Savolainen
50. A. J. Shor
51. E. G. Silver
52. M. J. Skinner
53. O. L. Smith
54. I. Spiewak
55. P. N. Stevens
56. J. G. Sullivan
57. J. A. Swartout
58. W. E. Thomas
59. M. L. Tobias
60. D. B. Trauger
61. M. E. Tsagaris
62. R. Van Winkle

63-67. D. R. Vondy
68. A. M. Weinberg
69. F. G. Welfare (Y-12)
70. G. E. Whitesides (K-25)

71-73. Laboratory Records Dept.
74. Laboratory Records, LRD-RC

75-76. Central Research Library
77-79. Y-12 Document Reference Section
80-81. Reactor Division Library
82. SHARE Library (K-25)

External Distribution

83-97. Division of Technical Information Extension (DTIE)
98. Research and Development Division, ORO
99-100. Reactor Division, ORO