OAK RIDGE NATIONAL LABORATORY
operated by
UNION CARBIDE CORPORATION
for the
U. S. ATOMIC ENERGY COMMISSION

MARTIN MARIETTA ENERGY SYSTEMS LIBRARIES
3 4456 0059859 2

ORNL - TM-506

cy. 55

OPERATING MANUAL FOR THE OAK RIDGE RESEARCH REACTOR

OAK RIDGE RESEARCH REACTOR STAFF

CENTRAL RESEARCH LIBRARY
DOCUMENT COLLECTION
LIBRARY LOAN COPY
DO NOT TRANSFER TO ANOTHER PERSON
If you wish someone else to see this document, send in name with document and the library will arrange a loan.

NOTICE

This document contains information of a preliminary nature and was prepared primarily for internal use at the Oak Ridge National Laboratory. It is subject to revision or correction and therefore does not represent a final report. The information is not to be abstracted, reprinted or otherwise given public dissemination without the approval of the ORNL patent branch, Legal and Information Control Department.

MARTIN MARIETTA ENERGY SYSTEMS LIBRARIES

3 4456 0059859 2

OPERATING MANUAL

FOR THE

OAK RIDGE RESEARCH REACTOR

OAK RIDGE NATIONAL LABORATORY

OAK RIDGE, TENNESSEE

Issued 4-16-63

UNCLASSIFIED
ORNL-LR-DWG 13392AR

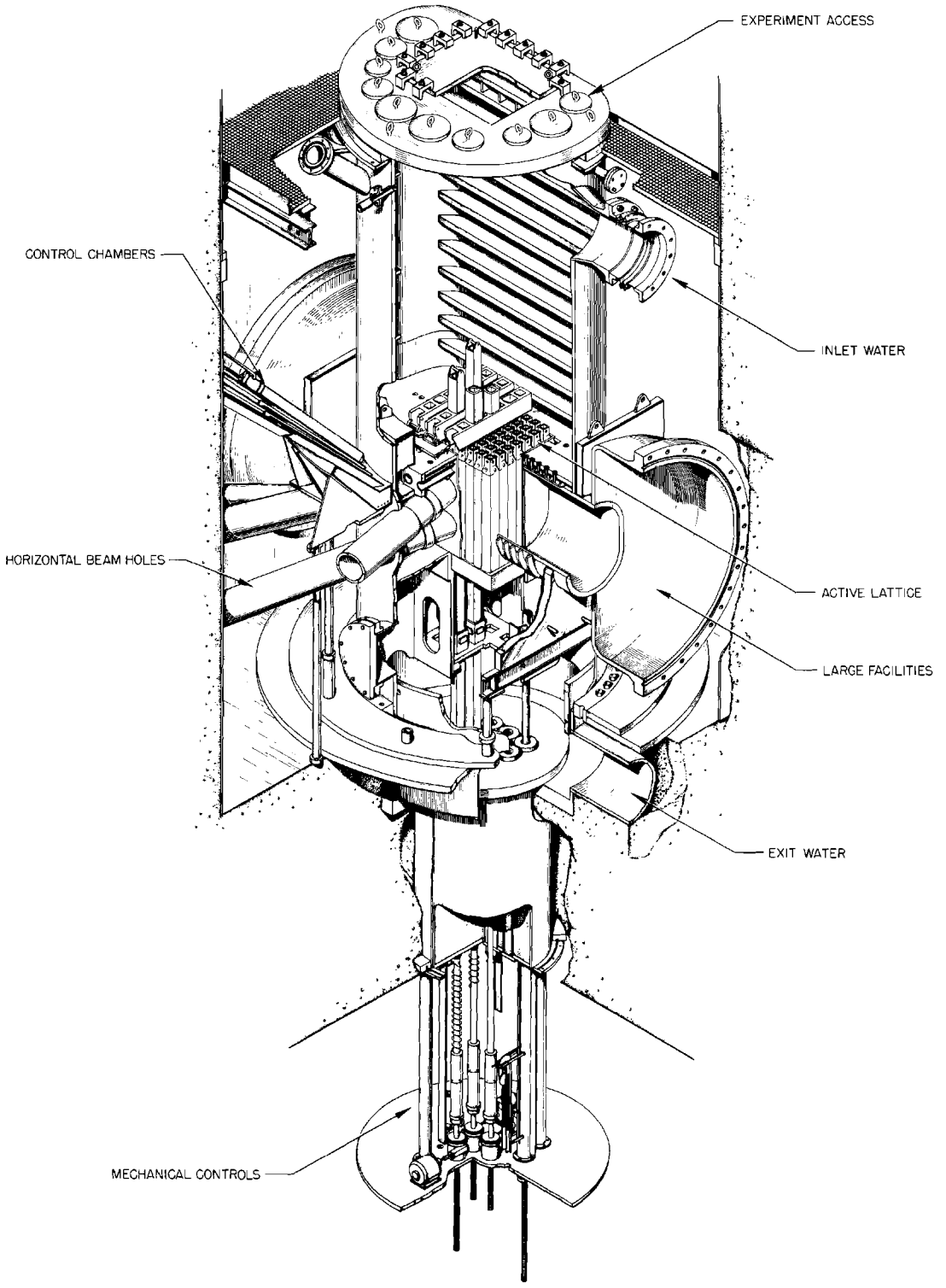

Oak Ridge Research Reactor Cutaway.

CONTENTS

	Page
1. OPERATING PROCEDURES	1-1
1.1. Introduction and General Principles	1-1
1.2. Specific Startup Procedures	1-2
1.2a. Responsibility	1-2
1.2b. Personnel Hazards during Startup	1-3
1.2c. General Procedures	1-3
1.2d. Preparation for Startup	1-3
1.2e. Startup (Via Operator Start to N_L)	1-6
1.2f. Startup (Via Instrument Start to N_L)	1-9
1.2g. Startup (Via Operator Start with Servo to N_L)	1-10
1.2h. Startup (Via Servo from N_L to Desired Power Level)	1-12
1.2i. Reactor Startup Following a Fuel Change and Procedures for Heat-Power, Safety-Level Relationship	1-14
1.2j. Startup Following a Shutdown Due to the Dropping of One or More Shim Rods	1-15
1.2k. Radiation Background Survey	1-16
1.2l. Adjustment of Water Flow to Control-Rod-Drive Seals	1-16
1.3. Steady State Operations	1-18
1.3a. Continuous Power Operation	1-18
1.3b. Heat-Power Calculations	1-19
1.3c. Variations and Adjustments in Heat Power and Instruments	1-20
1.3d. Shim-Rod Positions	1-21
1.4. Shutdowns	1-23
1.4a. Scheduled Shutdowns	1-23
1.4b. Shutting the Reactor Down	1-23

	Page
1.4c. Reporting Reactor Shutdowns	1-24
1.4d. Accidental Scrams	1-26
1.4e. Radiation Control Measures	1-27
1.4f. Power Outage - Checks to be Made	1-30
1.5. Disassembly and Maintenance of Reactor Components	1-34
1.5a. Removal of the Reactor Vessel Cover Plate	1-34
1.5b. Removal and Replacement of Hold-Down Arms, Fig. 1.1.	1-34
1.5c. Removal and Replacement of Shim-Rod Shock-Absorber Assembly	1-38
1.5d. Removal and Replacement of ORR Fission Chamber	1-40
1.5e. Replacement of a Control-Rod-Drive Mechanism	1-48
1.5f. Inserting or Removing an End-Box-Adapter in the ORR Core	1-57
2. INSTRUMENT AND CONTROL	2-1
2.1. Introduction	2-1
2.2. General	2-2
2.2a. Setback	2-2
2.2b. Reverse	2-3
2.2c. Slow Scram	2-3
2.2d. Fast Scram	2-3
2.3. Alarm Annunciator Panel	2-4
2.3a. General Description	2-4
2.3b. Process Annunciator - Detailed Description	2-5
2.3c. Control and Radiation Instrument Annunciators	2-18
2.3d. Experiment Annunciators	2-21

	Page
2.4. ORR Console	2-27
2.4a. Left Inclined Panel - Startup Components	2-27
2.4b. Center Inclined Panel - Operating Components	2-33
2.5. ORR Instrument Check-Out Procedures	2-38
2.5a. General	2-38
2.5b. Shim-Rod Drives and Release Mechanisms; Mechanical Function and Limit Switches	2-38
2.5c. Safety System, Release Mechanism, and Shim-Rod Performance Checks	2-39
2.5d. Procedures for Routine Safety System Adjustments and Tests at the ORR	2-48
2.5e. Alarm, Setback, Reverse, and Slow Scram - Circuit and Instrument Checks	2-67
2.6. Special Instrument Procedures	2-88
2.6a. Positioning Ion Chambers	2-88
2.6b. Dual Log-N System	2-91
2.6c. Servo Limit Switch Assembly	2-93
2.6d. Gamma Chambers	2-100
2.6e. Operation of E-Panel Switches	2-101
2.6f. Fission Chamber	2-103
2.6g. Instrument Warm-Up Time Following a Power Outage	2-103
2.6h. Facility Flow Instrumentation	2-104
2.6i. Low-Level Scram	2-107
2.6j. Dual Count-Rate Channels	2-107
3. FUELS AND REFUELING	3-1
3.1. Introduction	3-1
3.2. Fuel Units in Use at ORR	3-2
3.2a. Fuel Elements	3-2

	Page
3.2b. Shim Rods	3-5
3.3. Accountability and Records	3-8
3.3a. Introduction	3-8
3.3b. Accountability - General	3-8
3.3c. Methods Used for Accountability	3-9
3.4. Fuel Storage and Handling	3-16
3.4a. General Requirements - Fuel Storage	3-16
3.4b. General Requirements - Handling	3-17
3.4c. Removal and Insertion of Fuel Elements in the Core	3-20
3.4d. Removal and Insertion of Shim Rods	3-21
3.4e. Sawing Fuel Elements and Shim Rods	3-32
3.4f. Shipping Fuel Units to the Fuel Recovery Plant	3-40
3.5. Refueling the ORR	3-45
3.5a. General Considerations in Refueling	3-45
3.5b. Scheduled Reloadings	3-46
3.5c. Reloading to Remove Xenon Following an Unscheduled Shutdown	3-53
4. RESEARCH	4-1
4.1. Facilities	4-1
4.1a. F-8 Hydraulic-Tube System (HT-1)	4-1
4.1b. E-9 Hydraulic-Tube System (HT-2)	4-25
4.1c. Beam-Hole Facilities	4-44
4.1d. Engineering Test Facilities	4-47
4.1e. Vertical Facilities	4-51
4.1f. Poolside Facility	4-51

Page

4.1g. Experiments Not Requiring External Connections 4-55

4.1h. Hot Cell Facilities 4-55

4.2. Experiments 4-58

4.2a. Handling of New Research Experiments 4-58

4.2b. Safety Procedures for In-Reactor Experiments 4-64

4.2c. Fitting Experiment Access Tubes in the Core 4-66

4.2d. Experiment Pre-Operational and Shutdown Checks 4-72

4.2e. Coverage of Experiments by Operations Division Personnel 4-74

4.2f. Rules and General Information on Handling Experiment Safety-Instrument Failure 4-79

4.3. Radioisotope Production 4-83

4.3a. Introduction 4-83

4.3b. Inspection of Samples 4-83

4.3c. Radioisotope Targets Used in the ORR Hydraulic Tubes 4-84

4.3d. Thermal Neutron Fluxes 4-84

4.3e. Identification of ORR Irradiation Samples 4-85

4.3f. Irradiations in Core Positions C-2, F-5, and A-8 4-86

4.3g. Irradiation in Core Position A-7, N_F Tray 4-91

4.3h. Precautions for the Handling of Carriers in the ORR Pool 4-91

5. ORR WATER COOLING SYSTEM 5-1

5.1. Introduction 5-1

5.2. Reactor Primary System 5-4

5.2a. Description of the System 5-4

5.2b. Draining the Reactor Primary System 5-8

		Page
5.2c.	Filling the Reactor Primary System	5-12
5.2d.	Reactor Demineralizers	5-16
5.2e.	Regeneration Procedures	5-19
5.2f.	Bypass Degasifier	5-44
5.2g.	Large Facility Water System	5-49
5.2h.	The Bypass Filters	5-54
5.2i.	Gas Removal System	5-54
5.2j.	The Air Cooler Bypass Loop	5-55
5.3.	Reactor Secondary Cooling System	5-57
5.3a.	Introduction	5-57
5.3b.	Draining the Reactor Secondary System	5-58
5.3c.	Filling the Reactor Secondary System	5-58
5.3d.	Placing the System in Operation	5-59
5.3e.	Tower Operation	5-61
5.3f.	Chemical Conditioning of Tower Water	5-66
5.3g.	Chemical Hazards	5-72
5.3h.	Procedures for Operating Chemical Testing Instruments	5-73
5.3i.	Description of Tower Components	5-76
5.3j.	Heat Exchangers, Maintenance	5-81
5.4.	Reactor Water, Temperature Control System	5-84
5.4a.	Description of the System	5-84
5.4b.	Objectives of the System	5-84
5.4c.	System Design Problems	5-87
5.4d.	Mode of Control	5-89
5.4e.	Tower Control System	5-92

		Page
5.4f.	Secondary Control System	5-95
5.4g.	Primary Control System	5-101
5.4h.	Reactor Differential and Outlet-Temperature System	5-102
5.5.	Reactor Water, Other Controls	5-105
5.5a.	Reactor Flow Measuring System	5-105
5.5b.	Cooling Tower pH Control System	5-107
5.6.	Reactor Pool Cooling	5-110
5.6a.	Pool Water System	5-110
5.6b.	The Pool Demineralizers	5-112
5.6c.	Regeneration Procedures	5-120
5.6d.	Other Sources of Demineralized Water	5-136
5.6e.	The Secondary Loop	5-141
5.6f.	ORR Pool Cooling Control System	5-145
5.7.	Cooling System, Corrosion Research	5-150
5.7a.	Corrosion Test Stand	5-150
5.7b.	Nash-Hytor Vacuum Pumps	5-153
5.7c.	Corrosion Coupons	5-157
5.8.	Water Transfer Systems	5-159
5.8a.	Draining Storage Tanks to Retention Ponds	5-159
5.8b.	Filling the Storage Tanks	5-160
5.8c.	Draining Reactor Pool through Primary Cooling Loop to Storage Tanks	5-160
5.8d.	Draining the Center Pool to the Storage Tanks	5-161
5.8e.	Draining the West Pool to the Storage Tanks	5-162
5.8f.	Draining the Reactor Pool to the Retention Ponds	5-163

		Page
5.8g.	Draining the Center Pool to the Retention Ponds	5-164
5.8h.	Draining the West Pool to the Retention Ponds	5-164
5.8i.	Filling Reactor Pool from Storage Tanks through the Pool Demineralizer	5-166
5.8j.	Filling Center Pool from Storage Tanks through the Pool Demineralizer	5-167
5.8k.	Filling the West Pool from Storage Tanks through the Pool Demineralizer	5-168
5.8l.	Filling the Reactor Pool from the Storage Tanks	5-170
5.8m.	Filling the Center Pool from the Storage Tanks	5-170
5.8n.	Filling the West Pool from the Storage Tanks	5-171
5.8o.	Sending Water from 3004 Storage Tank or Demineralizer to the West, Center, or Reactor Pool	5-172
5.9.	Auxiliary Systems	5-173
5.9a.	Beam Holes	5-173
5.9b.	Freezing Precautions	5-185
5.9c.	Water Activity Readings, Scintillation Counter	5-199
6.	SPECIAL PROCEDURES	6-1
6.1.	Pertaining to the Reactor	6-1
6.1a.	Checking Chambers with a Source	6-1
6.1b.	Precautions to be Used in the ORR Pool	6-2
6.1c.	Large Facility Leak-Detector System	6-3
6.1d.	Dispersion of N^{16} around the Reactor	6-6
6.2.	Building 3042	6-9
6.2a.	Operation of the Pneumatic Doors	6-9

Page

6.2b. The ORR Heating, Air Conditioning, and Ventilation System 6-10

6.2c. Pressurizable Off-Gas System 6-21

6.2d. Additions to the Operating Manual, Procedure Memoranda Book, and Operating Instructions Notebook 6-34

7. EMERGENCY PROCEDURES 7-1

7.1. Emergency Power Supply 7-1

7.1a. Introduction 7-1

7.1b. Operation 7-1

7.1c. Reliability Checks 7-1

7.2. Emergency Ventilation System 7-5

7.2a. Introduction 7-5

7.2b. Components 7-5

7.2c. Operation 7-6

7.2d. Routine Checks 7-9

7.3. Emergency Cooling for the ORR 7-18

7.3a. DC Pony Motors 7-18

7.3b. Emergency Gasoline Pump 7-24

7.3c. Shutdown Pump 7-25

7.3d. Minimum Requirements for Reactor Operation 7-26

7.3e. Loss of Main Cooling Pumps 7-26

7.3f. Rupture of a Primary Cooling Line 7-28

7.3g. Summary 7-28

7.4. Emergency Services 7-29

7.4a. Fire Department 7-29

7.4b. Guard Department 7-30

	Page
7.4c. Dispensary	7-31
7.4d. Maintenance	7-32
7.5. Evacuation Procedures	7-33
7.5a. Emergency Directors and Alternates	7-33
7.5b. Laboratory Evacuation Signal	7-33
7.5c. Laboratory Evacuation, Emergency Outside Department	7-34
7.5d. General Alert	7-34
7.5e. Local Area Evacuation, Emergency Outside Department	7-35
7.5f. Building Evacuation, Emergency in Building 3042	7-35
8. RECORDS	
8.1. Data Accumulation	8-1
8.1a. Introduction	8-1
8.1b. Routine Daily Report Forms	8-1
8.1c. Other Routine Report Forms	8-22
8.1d. Information Required in the Log	8-34
8.2. Data Summation	8-36
8.2a. ORR Weekly Report Form	8-36
8.2b. The Quarterly Report	8-36

FIGURES

		Page
1.1.	ORR Hold-Down Arm	1-35
2.1.	"E" Switch	2-23
2.2.	Panel of "E" Switches	2-24
2.3.	Control Console	2-28
2.4.	Process and Nuclear Instrument Panels	2-29
2.5.	Block Diagram - Servo Limit Switches	2-95
3.1.	ORR Fuel Element - Side View	3-3
3.2.	ORR Fuel Element - End View	3-4
3.3.	ORR Shim Rod and Carrier	3-6
3.4.	ORR Fuel Element Storage Rack	3-18
3.5.	ORR Shim-Rod Transfer Winch and Hook	3-23
3.6.	Fuel Carrier on Handling Assembly	3-42
3.7.	Shim Rod Reactivity Worth as a Function of Follower U^{235} Contents	3-48
3.8.	Infinite Multiplication Factor, k_∞ as a Function of Burnup of Fuel Elements Originally Containing 200 gm of U^{235}	3-51
4.1.	ORR Hydraulic Tube System (HT-1)	4-2
4.2.	F-8 Hydraulic Tube Schematic	4-3
4.3.	V_R Valve Description	4-5
4.4.	V_W Valve Description	4-6
4.5.	V_H Valve Description	4-7
4.6.	V_C Valve Description	4-8
4.7.	Reactor Top Cover Plate	4-9
4.8.	Hydraulic Tube No. 2 Schematic	4-26
4.9.	Cross Section, Core Insert	4-27

		Page
4.10.	Inactive Position (Water Control Valve)	4-29
4.11.	Insert and Irradiation Position (Water Control Valve)	4-30
4.12.	Removal Position (Water Control Valve)	4-31
4.13.	Beam Holes	4-45
4.14.	Spray Cooling for Beam Hole Liners	4-46
4.15.	Neutron Beam Experiment Showing Movable Shielding Outside Reactor	4-48
4.16.	Facility Cooling System	4-49
4.17.	Loop Experiment in Large Facility	4-50
4.18.	Vertical Facility	4-52
4.19.	Vertical Loop Experiment Showing Provisions for Shielding, Piping, and Equipment	4-53
4.20.	Pool Experiment Showing Simplicity of Mounting Next to Reactor Lattice	4-54
4.21.	ORR Hot Cell	4-56
4.22.	Experiment Access Flanges in Reactor Lid	4-67
4.23.	Radioisotope Stringer	4-87
4.24.	ORR Isotope Loading, C-2	4-88
4.25.	ORR Isotope Loading, A-8	4-89
4.26.	ORR Isotope Loading, A-7	4-90
5.1.	Reactor Cooling System	5-2
5.2.	Reactor Pool Cooling System	5-3
5.3.	Gas Removal System of ORR	5-5
5.4.	Heat Exchanger Pit	5-7
5.5.	Calibration Curve for ORR Storage Tanks	5-15
5.6.	Basic Cooling Water Flow Diagram	5-85
5.7.	Basic Flow Diagram with Three Temperature Control Loops Shown	5-90

		Page
5.8.	Cooling Tower Capacity at Full Rate Water Flow	5-94
5.9.	Tower Control System Block Diagram	5-96
5.10.	Secondary Control System Block Diagram	5-97
5.11.	Secondary Control System Setpoint Block Diagram	5-99
5.12.	Cooling Water Flow Curves	5-108
5.13.	Water Supply to Drive Seals in Sub-Pile Room	5-137
5.14.	Corrosion Test Rig	5-152
5.15.	Steam Tracing System	5-187
5.16.	Steam Tracing at Air Coolers	5-188
5.17.	Steam Tracing, Reactor Secondary Loop Cooling Tower	5-195
6.1.	Large Facility, Leak Detector System	6-5
6.2.	N^{16} Dispersion	6-7
6.3.	N^{16} Dispersion, Poolside	6-8
6.4.	Pressurizable Off-Gas System	6-23
6.5.	Manometer Installation	6-28
6.6.	Filter Pit and Gauge Panel	6-29
7.1.	Decontamination Scrubber	7-3
7.2.	Schematic for ORR Scrubber	7-4
7.3.	Instrument Flow Sheet	7-7

EXAMPLES

		Page
1.1.	Shutdown Stamp	1-24
1.2.	Post-Power-Outage Check List	1-31
1.3.	Pre-Power-Outage Check List	1-33
1.4.	ORR Release Mechanism Inspection Report	1-55
2.1.	ORR Shim Rod Drive Safety Switch Checks	2-40
2.2.	ORR Shim Rod and Shim Rod Drive Performance Checkout	2-49
2.3.	Pre-Startup ORR Instrument Checks	2-69
3.1.	SS Materials Inventory and Calculation Sheet	3-10
3.2.	Source, Nuclear, and Special Materials Transfer	3-12
3.3.	Transfer Memo	3-13
3.4.	Shim Rod Insertion Check List	3-27
3.5.	Shim Rod Removal Check List	3-29
3.6.	ORR Replacement Loading	3-52
4.1.	ORR Hydraulic Tube Sample Schedule Sheet	4-24
4.2.	Experiment Safety Check Sheet	4-75
4.3.	Experiment Information Sheet	4-77
5.1.	ORR Large Facilities - Check List	5-51
5.2.	Tower Inspection Record	5-64
5.3.	ORR Imbedded Aluminum Corrosion Experiment	5-154
6.1.	Test Data, ORR POG Filter Pit, Building 3109	6-31
7.1.	"Ready" Check Sheet for ORR Scrubber	7-15
7.2.	Procedure for Testing Emergency Cooling Components	7-22
8.1.	ORR Hourly Readings	8-2
8.2.	Accumulated Instrument Power	8-5

		Page
8.3.	12-8 Shift ORR Daily Check Sheet	8-7
8.4.	8-4 Shift ORR Daily Check Sheet	8-10
8.5.	4-12 Shift ORR Daily Check Sheet	8-13
8.6.	ORR Daily Water System Checks	8-16
8.7.	Daily Routine Instrument Check List for ORR	8-18
8.8.	Graph	8-19
8.9.	Graph of Shim-Rod Positions vs Time	8-20
8.10.	ORR Daily Summary	8-21
8.11.	ORR Startup Check List	8-24
8.12.	Background Survey	8-28
8.13.	ORR Shutdown Check List	8-30
8.14.	Beam Hole Status Sheet	8-31
8.15.	ORR Replacement Loading	8-32
8.16.	Weekly Checks	8-33
8.17.	ORR Weekly Report	8-37

TABLES

		Page
2.1.	Dual Count-Rate Channels	2-109
3.1.	Selected Reference Dimensions for ORR Fuel Elements	3-2
3.2.	Selected Reference Weights for ORR Fuel Elements	3-5
3.3.	Selected Reference Dimensions for ORR Shim Rods	3-7
3.4.	Selected Reference Weights for ORR Shim Rods	3-7
3.5.	Typical Operating Cycle for ORR	3-45
4.1.	Thermal Neutron Fluxes	4-85
6.1.	Roof Fan Capacities	6-12
7.1.	Valve Listing for Scrubber	7-16

1963

1. OPERATING PROCEDURES

1.1. Introduction and General Principles

Reactors and their operation may be potentially more hazardous than many industrial enterprises. Generally, this is due to the ever-present possibility of sudden, large, power increases in the reactor itself and the inability of human senses to detect the radiation resulting from such an excursion. The possibility of large area contamination, as well as local contamination, is an added hazard that might result from such an excursion.

To minimize the inherent hazards, detailed methods and procedures have been established to serve as guides in the various phases of reactor operation. The following Operating Procedures assign specific duties and responsibilities which, experience has shown, are necessary for the operation of the Oak Ridge Research Reactor at a power level of thirty megawatts.

1.2. Specific Startup Procedures

1.2a. Responsibility

The most hazardous time of reactor operation is during the startup period. To avoid a situation in which some prestartup checks are neglected or abnormal conditions are not noted because of dual supervision, only one supervisor will be in charge during a startup. The supervisor-in-charge will assure himself that all checks have been made and that the reactor and experiments are ready for operation. He must direct the startup from the control room, giving instructions to personnel at other stations, as needed, via the intercommunication and/or public address system. The supervisor-in-charge when the startup checks are made must follow through with the startup until the power level of N_L is attained.

The minimum required personnel for a normal reactor startup are a shift supervisor and a reactor operator. Occasionally, an instrument mechanic and/or instrument engineer is needed for standby service. Other personnel are superfluous and may indeed present confusion and distraction to the operation.

During each reactor startup, it shall be the responsibility of the supervisor-in-charge to evaluate the number of personnel required for the operation and to excuse interested bystanders from the control room to the observation post outside the control-room window. There will be special occasions when extra personnel (i.e., trainees, committees) will necessarily be present. During such times, those observing should be instructed to avoid confusing and/or interfering with the operation.

1.2b. Personnel Hazards During Startup

The startup of the reactor presents many potential personnel hazards. During extended shutdowns, changes are usually made in experiment facilities and beam hole shields which offer potential hazards during startup. Although every effort is made to insure the safety of all reactor facilities, the possibility of human error or equipment failure is always present. Therefore, it is essential that Health Physics personnel monitor the beam holes and experiment facilities during startup and make a complete radiation survey after the reactor is at power.

1.2c. General Procedures

Prestartup checks, itemized on the Startup Check List (Section 8.1c), must be made prior to every startup. After this has been done and the supervisor-in-charge is satisfied that all shutdown work is completed, all experiments have been thoroughly checked out, the water system is operating properly, and that all changes have been properly recorded, he will then direct the operator to proceed with the startup. The supervisor must remain in the control room while the startup is in progress.

1.2d. Preparation for Startup

1. Instrumentation

   Prior to startup of the reactor, the minimum complement of instrumentation to monitor primary water flow and pressure drop, power level, neutron level, temperature, and off-gas are as follows:

a. Two safety channels

b. One Log-N channel

c. One fission-chamber channel if Log-N confidence is <u>not</u> present

d. One ΔT channel

e. One reactor exit water temperature

f. Reactor water flow indicator

g. One channel of normal off gas and one channel of pressurizable off gas

h. One north-facility flow

i. Two south-facility flows

It should be pointed out that the above limitations are set forth as an absolute minimum. In all cases where practical, the maximum complement of instrumentation will be made available.

2. Visually inspect the following areas for proper status:

   a. Reactor pool

   b. Beam holes

   c. Experiment facilities

   d. Subpile room

3. Put the water system into operation in the following sequence:

   a. Fill the reactor pool and observe that the pool alarms acknowledge this condition.

   b. Start circulating the reactor cooling water and adjust it to the desired flow rate.

   c. Start circulating the pool water through the heat exchanger.

   d. Put the secondary cooling loop in operable condition and set the system on "automatic".

e. Establish the reactor heat-exchanger control temperatures' set-point and set the system on "automatic".

f. Establish water flow to the horizontal beam-hole liners and plugs according to the directions on the status sheet. It is important to note any status change in beam-hole liners since this will affect the control chamber current.

g. Establish water flow to the north and south experiment facilities according to the directions on the status sheet.

h. Place the reactor water demineralizer into service.

i. Place the pool water demineralizer into service.

j. Place the degasifier into service on the reactor water system.

4. Check the instrumentation and place it in operating condition as follows:

a. Put all utility services in order according to the startup check list.

b. Establish shim-rod-magnet drop currents; adjust to drop the rods at 1.45 N_F and observe that the safety monitor is operating.

c. Calibrate the two Log-N channels and set them on "operate".

d. Turn the selected Count-Rate Meter to 60 counts per second for calibration, then set it on "use".

e. Perform the rod drive test which checks the workability of the upper limit switches.

f. Raise the rods at least one inch (but no more than two inches) off the seat position and scram with the Jordan Button on each, No. 1, No. 2, and No. 3, sigma amplifier.

g. Repeat step f., but scram with both Log-N amplifiers by turning from "operate" to "hi calibrate", then set each on the "operate" position.

h. Set the micromicroammeter on "recorder" position and set the range changer on the 2×10^{-5} range and leave it.

i. Observe that the annunciator stations and instrument monitors are "normal" (see the status sheet for exception). During critical runs the most sensitive range may be used.

j. Observe that all instruments are operating normally and that the corresponding recorders are tracking.

k. Make sure that the public address system is operating.

5. Complete all checks on the Startup Check List.

6. Arrange for Health Physics personnel to monitor critical areas during the startup.

7. Any abnormal conditions encountered during the preparation for startup must be corrected before proceeding with the startup. When it is determined that all prestartup checks have been completed and that everything is in order for startup, the control desk operator will announce over the public address system, "The reactor is going up to N_L." This should be repeated at least once.

1.2e. Startup (Via Operator Start to N_L)*

1. After ascertaining that all checks under Section 1.2d. have been satisfactorily completed, rod withdrawal may proceed as follows:

---

*Operator start (Manual Operation) is used only when the Servo Control System is not functioning, or in specific cases when required to "chase" Xenon.

a. Turn the reactor key operate switch to "on".

b. Set the shim-rod selected as preferred to the "preferred" position and turn all other rod-mode switches to the "normal" position.

c. Set the "raise-test" switch to the"normal" position.

d. Set the scram switch to "normal" and clear the slow scram lights by pressing the scram reset push button.

e. Set the "bypass-reverse" switch to "normal".

f. Adjust the selected fission chamber position to get at least 1.5 counts per second on the Count-Rate Meter and set it on "automatic".

g. Observe that the servo demand is at N_L and set the vernier at midscale.

h. Press the "operator start" push button. The startup horn will sound. When the horn has "timed" out, the green light above the group "rod-withdraw" switch will come on indicating that conditions are normal for rod withdrawal.

i. Set the group "rod-withdraw" switch to "intermittent". All rods will withdraw intermittently under timer supervision. If a 30-second period is detected by either the Count-Rate Meter (CRM) or the Log N, rod withdrawal will be inhibited until the group rod withdraw switch is reset by turning it to "neutral" and then back to "intermittent". While in start, rod withdrawal is inhibited if the CRM drops below 1.5 cps or exceeds 8,000 cps. During this phase of startup, when the Log-N recorder indicates less than 0.001, the CRM is the only instrument that can give a reliable reading.

j. When a level of 0.001 N_L is reached on the Log-N meter, set the group-rod-withdraw switch to "high". The rods will be withdrawn continuously, bypassing the timer. The fast-period inhibitors, as described in Section i. above, also apply to this mode of rod withdrawal.

2. Any time during startup, the 30-second-period inhibition can be bypassed by setting the "bypass-reverse" switch on "bypass". This allows the reactor power to be increased as rapidly as a 20-second period without inhibiting rod withdrawal. The 20-second-period inhibition can also be bypassed. This is done by holding the "bypass-reverse" switch on "bypass" and obtaining "fast-period-permit" by pressing the "fast-period-permit" button. This allows the reactor power to increase up to the rate of a 10-second period without inhibiting rod withdrawal.

3. a. When using this procedure without a dependable servo channel:

   (1) When the power level approaches N_L as indicated on the Log-N recorder which is in service, the period should be maintained slightly greater than 30 seconds.

   (2) The "run" button can be pushed to achieve the "run mode of operation" when the Log-N recorder in service indicates a reading between 0.6 and 1.8 N_L and the period is greater than 30 seconds.

   (3) The power should be stablized at N_L for a short time to permit evaluation of conditions (i.e., check that all instruments have responded properly and that all experiments are ready for power operation).

b. When using this procedure to "chase" Xenon, which may be desirable toward the end of a cycle when a low amount of excess reactivity is available:

(1) As the power approaches N_L as indicated by the Log-N recorder in service, the period should be maintained slightly greater than 30 seconds.

(2) At the power level of $\sim N_L$, press the "servo" button and the "run" button. The servo will take control of the reactor and maintain the power constant at N_L.

4. During normal startup, there should be no reason to insert the rods except for minor adjustments to balance or maintain certain desired relative rod positions. For such adjustments, individual rod withdraw and insert push buttons will be used. If a situation should develop requiring a rapid reduction of power, the "bypass-reverse" switch should be turned to the "reverse" position. This inserts all rods simultaneously at full speed. A more rapid power reduction can be obtained by turning the scram switch to the "scram" position.

1.2f. Startup (Via Instrument Start to N_L)

Ascertain that all checks under Section 1.2d. have been satisfactorily completed. Withdrawal of the rods may then proceed as follows:

1. Turn the reactor operate key switch to "on".
2. Turn all rod mode switches to "normal" except the rod selected as preferred, which should be placed in the "preferred" mode.
3. Set the "raise-test" switch to "normal".

4. Set the scram switch to "normal" and clear the slow scram lights by pressing the scram reset push button.
5. Set the "bypass-reverse" switch to "normal".
6. Set the selected fission chamber on automatic and observe that it is indicating at least 20 cps but less than 40 cps.
7. Observe that servo demand is at N_L and set the servo vernier at midscale.
8. Press the "instrument start" push button. This will sound the startup horn. After the horn has "timed" out, the startup will proceed automatically to a power level of N_L. During the instrument start, the following events will occur as demanded by the status of startup conditions:
   a. The servo mechanism will be energized.
   b. The servo limit switches will be repositioned.
   c. The rods will be withdrawn intermittently below Log-N confidence (0.001 N_L).
   d. The rods will be withdrawn in "group-high" above Log-N confidence.
   e. The servo will take control of the reactor at N_L and when the servo rod leaves the withdraw limit to take control, instrument start is terminated.
9. Press the "run" button to ready for power operation.

1.2g. Startup (Via Operator Start with Servo to N_L)

Ascertain that all checks under Section 1.2d. have been completed. Rod withdrawal may then proceed as follows:

1. Turn all rod mode switches to "normal" except the rod selected as preferred which should be placed in the "preferred" mode.
2. Turn the operate key switch to "on".
3. Set the "raise-test" switch to "normal".
4. Reset the slow scram lights by pushing the scram reset button.
5. Set the selected fission chamber to "manual" and adjust it until the Count-Rate Meter indicates at least 1.5 cps--preferably 10-50 cps.
6. Observe that the servo demand is at N_L and set the servo vernier at midscale.
7. Press the "operator start" push button and the "servo" push button. The startup horn will sound. When it has "timed" out, the green light above the group withdraw switch will come on indicating a group withdraw permit.
8. Set the group withdraw switch to "intermittent". All rods will withdraw intermittently when the timer is energized. The rods will continue to withdraw until a 30-second period is attained on the Log N or the Count-Rate Meter. If this period is reached or the individual rod withdraw or insert buttons are pushed, the group withdraw switch must be reset by returning it to "neutral" and back to "intermittent". Rod withdrawal will cease if the Count-Rate Meter reads lower than 1.5 cps or greater than 8,000 cps. When the Count-Rate Meter shows 8,000 cps, the fission chamber should be withdrawn to read approximately 1.5 cps. While the fission chamber is in motion, rod withdrawal is prohibited.
9. At 0.001 N_L, the Log-N channel is considered reliable. The group withdraw switch may then be turned to "high" to withdraw rods

continuously, bypassing the timer. It must be held in the "high" position since it is spring loaded.

a. The 30-second period may be bypassed by holding the "bypass-reverse" switch on "bypass".

b. The 20-second period may be bypassed by holding the "bypass-reverse" switch on "bypass" and pressing the "fast-period-permit" button. This will allow a 10-second period. The fast period permit shall be used only in chasing xenon buildup.

10. As the power level approaches N_L, as indicated by the Log-N recorder, the period should be held at 30 seconds.

11. When the reactor power reaches N_L, the servo will take over and hold the power level there. The "run" button should be actuated to be ready for power operation.

1.2h. Startup (Via Servo from N_L to Desired Power Level)

The power level should be held at N_L until all instruments have reached equilibrium and it is determined that all conditions are normal. Any malfunctioning instrument and/or equipment pertinent to startup and/or constant power operation of the reactor should be repaired immediately. Should it be necessary to make repairs and the nature of the repairs is such that if performed at a power level of N_L it may endanger personnel or the reactor, the reactor will be shut down.

When it is determined that everything is in order and that all conditions are ready for the power to be raised to the normal operating level, the control desk operator will proceed as follows:

= 6 rod is the servo rod.

1. Announce over the PA system, "The reactor is going to power". Repeat once.

2. Adjust the rod positions as needed to maintain the control rod (No. 6 rod) between 15 and 20 inches out and the remaining rods at equal distances out.

servo control rod.

3. Set the selected fission chamber on "automatic". Hold the "Servo Demand" switch in the "raise" position. This will drive the "Servo Demand" indicator upscale, calling for an increase in power from the servo amplifier. This increase in demand causes the servo system to withdraw the servo control rod, No. 6. As the power increases, the servo control rod will be withdrawn until it energizes the servo withdraw limit switch. The "preferred" shim rod will then be automatically withdrawn until the regulating rod leaves the "withdraw limit", i.e., when the power overtakes the demand.

4. Partial flow blockage through the fuel elements by foreign materials could produce localized boiling due to insufficient heat removal capacity. To prevent such an event from occurring, an additional inspection of the core through the access cover port will be made at a reduced power (5 Mw or less). If any obstructions are detected which have an equivalent diameter of 1/2 in. or greater, the reactor should be shut down and the flow restrictor removed.

It appears that inspections under the above-mentioned conditions will reveal foreign matter which may otherwise be obscured. The inspections of new elements to be installed and the inspection of the core with the pool water level lowered will be continued.

5. Continue to raise the power level via the Servo Demand switch until the desired operating power level is reached. Final adjustments of the power level should be made by the servo vernier.

1.2i. Reactor Startup Following a Fuel Change and Procedures for Heat-Power, Safety-Level Relationship

Following a major change in fuel loading, such as an emergency loading or at the beginning of a new cycle, the flux distribution may change sufficiently to disrupt the heat-power, safety-level relationship, thereby destroying the level calibration on the safety recorders. Considering this possible change in relationship, the standard procedure for startup to power and operation shall be as follows:

1. Bring the reactor to $\sim$5 Mw as indicated on the power level instruments (safeties).
2. Operate at this level until a reliable heat balance can be made on the reactor (15 to 20 minutes or until steady state conditions are reached) and inspection of the core is completed.
3. Take the reactor up to 25 Mw using the information obtained in step 2 above as a basis. After a heat balance, increase power to 30 Mw. Do not exceed the 100 level on any safety, even though this may be below the 30-Mw level. Adjust the chambers and heat power to correspond to the 30-Mw level if necessary.
4. At the beginning of a cycle, the chambers will be adjusted so that 30-Mw operation gives a reading 95-100 on all three safety level channels. Between 95-100, positioning to yield a reading $\sim$95 will minimize the number of adjustments required during a fuel cycle.

5. Make a survey of heat power versus instrument power daily. Make any adjustments in set point to keep this relationship as close as practical.

1.2j. Startup Following a Shutdown Due to the Dropping of One or More Shim Rods

Time is an important element following an accidental shutdown if the reactor is to be brought up to power prior to xenon poisoning. However, safety must never be jeopardized in reactor startup regardless of the time element.

It is anticipated that, on occasion, accidental shutdowns may occur when the shift engineer is in another area. Should this occur, the reactor operator should contact the shift engineer immediately and inform him of the event. The shift engineer will provide the reactor operator with specific instructions as to what actions he should take.

It is desirable for the shift engineer or his designated representative to witness the recocking operation of the drive unit(s). This inspection is specifically to determine any abnormal action which the operation displays. From this inspection, an evaluation of the unit(s) operation will be made and a detailed account will be recorded in the reactor operations log book. Abnormalities will be re-evaluated by the reactor supervisor, and a decision will be made regarding the replacement of the unit(s).

If abnormal operation is severe (i.e., the unit fails to recock or there is sufficient water leakage to present an electrical hazard), the reactor supervisor should be notified immediately. Otherwise, the reactor should be returned to power in an expedient and safe manner.

1.2k. Radiation Background Survey

Due to the many potential hazards associated with the reactor startup, Health Physics personnel should be present during a startup to monitor the most critical areas. In general, the following radiation surveys should be made during the startup and subsequent operation:

1. Health Physics personnel should monitor the beam holes, north and south facilities, and the pipe chase during the startup. These areas should be checked for fast and thermal neutrons and beta-gamma radiation.
2. A complete "Background Radiation Survey" (refer to "Background Survey" in Section 8.1c) should be made by Health Physics personnel after operating power is attained.
3. During continuous reactor operation, a complete "Background Radiation Survey" should be made by Reactor Operations Department personnel once each week.
4. Additional radiation surveys should be made by Health Physics or Reactor Operations Department personnel whenever necessary.

1.2l. Adjustment of Water Flow to Control-Rod-Drive Seals

After evaluating the history of unscheduled rod drops, it is thought that differential thermal expansion between the push rod and drive tube contributes to unscheduled rod drops. To eliminate this as a contributor, the following procedure should be followed each time a reactor shutdown exceeds on hour.

1. At least one hour prior to reactor startup, full cooling flow should be established to the drive unit seals; i.e., the valve on the "red" line which supplies flow to the inner section of

the shock absorber and external to the drive tube should be fully opened, and the valve on the "blue" line which supplies flow around the drive tube in the vicinity of the hydraulic wipers should be fully opened.

2. Before the reactor is taken critical, the flow to the seals should be reduced by: (a) closing the valve on the "red" lines, and (b) closing the valve on the "blue" lines and then opening this valve one revolution.

   During a major shutdown, the actions as described above should be performed prior to the rod-drive checkout.

3. The temperature of each drive tube should be checked by "feel" and should be at about ambient temperature.

4. All activities related to this procedure should be recorded in the log book.

1.3. Steady State Operations

1.3a. Continuous Power Operation

During continuous power operation, numerous checks must be made and pertinent data recorded on a routine schedule. Other duties pertinent to, and associated with, reactor operation must also be performed.

The reactor power is held constant at a predetermined level. Power adjustments are made with the servo demand in conjunction with the servo vernier. When the reactor reaches equilibrium, fewer adjustments are required; however, no less attention should be given to the operation of the reactor. The control console must not be left unattended at any time when the shim rods are withdrawn.

The tasks of the shift engineer are quite varied and on occasion require that he be in other area. To expedite the full responsibilities in other areas, as well as in the ORR building, the following general rules should be observed during the 4-12 and 12-8 shifts and on the 8-4 shift during weekends and holidays.

1. When leaving the ORR building, always inform the ORR control desk operator where he can be reached.
2. If his absence from the ORR building is of a long duration, he should make periodic calls to the ORR control desk (approximately every 30 minutes).

Due to the large demand for consultation on ORR operations and related work during the day shift, a member of Reactor Operations supervision must be present in the ORR building at all times.

During continuous power operation, the following duties must be performed:

1. Console Operator

The console operator must keep the reactor control instrumentation under constant surveillance. Any misoperation, malfunctioning instrument, or abnormal condition should be recorded and reported to the supervisor on duty. Data must be recorded hourly as per the data accumulation sheet described in Section 8.1.

2. Roving Operators

The roving operators make periodic checks on the water systems in the reactor building and in the pump area, record mid-shift readings as per the data accumulation sheets described in Section 8.1., perform pool and hot cell work, assist experimenters as needed, make routine building radiation surveys, check the operation of emergency equipment such as the emergency power generator and air decontamination scrubber, complete the routine check sheets, and perform other duties of a non-routine nature as may be required.

1.3b. Heat-Power Calculations

1. The power-level of a reactor is based upon the calculated heat power; that is, the heat gain in the reactor and pool cooling water systems. Accurate calculations of heat power must be made at all reactor power levels above N_L on the Log-N meter. Detailed instructions for calculating heat power are on the "ORR Hourly Readings" data sheet (refer to "ORR Hourly Readings" in Section 8.1.).

2. Heat-power calculations during reduced power operation and start-ups will be made as follows.

   a. Shutdown not resulting in a reloading of the core:

   (1) $$\left\{\begin{array}{l}\text{Integrated heat}\\ \text{power for that}\\ \text{portion of hour}\\ \text{prior to shut-}\\ \text{down}\end{array}\right\} = \left\{\begin{array}{l}\text{Fraction of}\\ \text{hour prior}\\ \text{to shutdown}\end{array}\right\} \times \left\{\begin{array}{l}\text{Most recent}\\ \text{hourly heat}\\ \text{balance}\end{array}\right\}$$

   (2) $$\left\{\begin{array}{l}\text{Integrated heat}\\ \text{power for that}\\ \text{portion of hour}\\ \text{subsequent to}\\ \text{startup}\end{array}\right\} = \left\{\begin{array}{l}\text{Fraction of}\\ \text{hour sub-}\\ \text{sequent to}\\ \text{startup}\end{array}\right\} \times \left\{\frac{\begin{array}{l}\text{Integrated}\\ \text{instrument}\\ \text{power for}\\ \text{portion of}\\ \text{hour sub-}\\ \text{sequent to}\\ \text{startup}\end{array}}{30}\right\}$$

   $$\times \left\{\begin{array}{l}\text{Subsequent hourly}\\ \text{heat balance after}\\ \text{a minimum of 30}\\ \text{minutes at full}\\ \text{power } (N_F)\end{array}\right\}$$

   b. Startup after refueling: same as a.(2)

1.3c. Variations and Adjustments in Heat Power and Instruments

There are inherent characteristics in the design of the ORR which prevent a continuous power run without variations in power. This is pointed out to acquaint personnel with this fact and to alert them to the importance of knowing the "whys" of power level fluctuations.

In normal operation during a cycle, the heat power will slowly decrease due to the change in position of the shim rods. This is true since the ionization chambers see a slightly different flux as the cadmium section of the shim rod moves away from the chambers; the average power and, since the servo system controls the reactor by maintaining a constant flux at the chamber location, the heat power will decrease. Also some

deviations in power level will arise due to the varying temperature of the reactor cooling water. This is caused by the response of the control system of the reactor secondary system.

Deviations in power level due to the above are not to be confused with power changes from other causes such as experiment changes, the filling or emptying of horizontal beam holes or facilities, or other unexpected changes. In the event of any unexplainable power change, the ORR supervisor must be notified.

The basis for power level adjustments shall be as follows:

1. Adjustments in power level shall be made when the average decrease is greater than 1% of full power.
2. Adjustments are made by using the power calculations of the last 24-hour interval following the 1% decrease.
3. Adjust the power level to full power.
4. Reposition the safety level chambers No. 1, No. 2, and No. 3 to read not more than 100 and not less than 95.

1.3d. Shim-Rod Positions

In order to maintain a reasonably uniform flux distribution, the shim rods are kept as nearly even as is practical. During normal operation, keep the servo-controlled rod within one inch of the position of the other rods at all positions less than 25 inches. The non-servo-controlled rods are kept at equal distances out.

As the reactivity decreases due to fuel burnup and the shim rods are withdrawn to compensate, the servo-controlled rod is maintained at 25 inches* to provide adequate reactivity for reactor control.

*As the other rods in gang position exceed this position.

At least once per shift, all rod positions are equalized and the rod positions read both on the selsyns and on the measuring sticks in the subpile room.

1.4. Shutdowns

1.4a. Scheduled Shutdowns

All scheduled shutdowns must have a shutdown sheet or schedule, prepared in advance by a supervisor, listing in detail all of the work to be done. This may be fairly elaborate in the case of a bi-monthly shutdown. Shutdown schedules may be much simpler where the shutdown is for some special reason. In general, the number of shutdowns are kept to a minimum consistent with the experiments. Whenever possible, at least 24 hours in advance, notice is given of a scheduled shutdown. This notice is posted on the "Shutdown Board" giving the shutdown time, approximate duration, and the reason for the shutdown.

1.4b. Shutting the Reactor Down

1. Ten minutes prior to shutdown time, announce over the public address system the forthcoming shutdown.
2. Check on the shutdown sheet for the proper manner to shut the reactor down. This will vary from time to time due to the experiments which may be in the reactor.
3. Turn the key switch to the "off" position and remove the key.
4. Turn the scram switch to "scram" and leave it in this position.
5. Lower the reactor water inlet temperature set-point to equalize the reactor and pool water temperatures.
6. Close the motorized valves and then stop the reactor 6000-gpm pumps. The shutdown pump will automatically start when the 6000-gpm pumps are stopped.

7. Stop the reactor-pool primary and secondary pumps.

8. Complete the ORR "Shutdown Check List". (Refer to Section 8.1a.)

1.4c. Reporting Reactor Shutdowns

In order to maintain consistency in reporting reactor shutdowns, a rubber stamp form, Example 1.1, is used in the log book. Each shutdown from an accountable power level should be reported in this manner regardless of the number of shutdowns that occur. The minimum accountable power level is N_L.

It should be understood that no more than one form should be used for each shutdown. The foreman or supervisor on whose shift the shutdown occurs will make initial use of the form for reporting the shutdown. The foreman or supervisor on whose shift the reactor reaches the minimum accountable power level following startup will be responsible for completing the form with respect to "up", "lost time", and "time distribution".

It is suggested that a pencil be used with the form in order to facilitate the correction of errors.

Example 1.1.

SHUTDOWN INFORMATION

TIME: down_____ up_____ lost time_____ hr.

SCHEDULE: scheduled [R] [O] unscheduled [R] [O]

MODE: scram setback reverse

CAUSE: equipment [M] [I] HE [ ] other [ ] unknown [ ]

TIME DIST: operations_____ hr. research_____ hr.

CIRCUMSTANCES: _____

A guide to the use of the form follows:

Time

Down - Refers to the time that the reactor power level drops below the minimum accountable power level.

Up - Refers to the time that the reactor, upon startup, reaches a power level equal to or in excess of the minimum accountable power level.

Schedule - Check the appropriate square.

"R" and "O" refer to "Research" and "Operations" and the checked square indicates the group responsible for the shutdown, whether scheduled or unscheduled. An unscheduled shutdown is defined as any shutdown which is required to correct an abnormality upon 30 minutes or less notification.

Mode - Check the appropriate square.

Scram - A shutdown caused by the release of shim rods.

Setback - An automatic reduction in power by servo. If the setback clears before the reactor power falls below the minimum accountable power level, it does not constitute a shutdown and the form should not be used. All setbacks, however, must be reported in the customary way in the log book.

Reverse - A reduction in power by an automatic or manual insertion of a shim rod. If, as in the case of the setback, the reactor power does not fall below the minimum accountable level, the reverse does not constitute a shutdown and the form should not be used.

Cause - Check the appropriate square.

Equipment - If the shutdown was the result of equipment failure, check whether the failure was mechanical (M) or an instrument (I) failure.

At times it is difficult to distinguish between instrument and mechanical failures. The mechanical failure of a limit switch or a similar device in an instrument, for example, is confusing; however, since the switch is a component of the instrument, the failure is classed as instrument failure. Compressor failures, rocker failures, pump failures, etc., are clear-cut examples of mechanical failures.

HE - Indicates human error, whether due to poor judgment or inadvertence.

Other - Calls for an explanation under the heading "Circumstances", as to the cause of the shutdown. If adequate space is not provided, a continuation of the explanation should be made in the customary manner.

Unknown - Self-explanatory.

Time Distribution

Fill in a reasonable estimate of the down time for which the research group and/or the operating group are responsible.

1.4d. Accidental Scrams

When an accidental rod drop occurs, the shift engineer or his designated representative should immediately report to the subpile room to inspect the drive unit during the recocking operation. Any abnormal conditions should be detailed in the log book and be brought to the attention of the reactor supervisor.

Following any accidental scram, a detailed description of the shutdown should be prepared in writing and submitted to the Reactor Supervisor by the shift engineer. Such a program will not only aid in preventive maintenance but will also aid in the determination of the source of trouble, thus preventing unnecessary shutdowns.

1.4e. Radiation Control Measures

1. Regulations for Pool Entry During Shutdown Operations

Entry to the ORR pools during shutdown activities is subject to "contamination zone" and "radiation zone" regulations. These regulations are restated to assure familiarity to all personnel.

a. The pool and associated area must be established as a "contamination zone".

b. A valid "Radiation Work Permit" must be on hand.

c. The minimum personnel monitoring requirements shall be: pencil meters, direct reading pocket dosimeters, and a film badge.

d. The special pool monitron must be in position and checked for proper operating condition.

e. The regular pool monitron must be checked for proper operation as per part 2 below.

f. Upon exiting from the pool, each person shall be checked for contamination, and his exposure record shall be brought up to date.

It is the responsibility of the shift engineer to assure that all regulations are followed.

2. Use of Monitrons in Reactor Pool During ORR Shutdown

A specially adapted monitron has been made available to be used to monitor general radiation background in the reactor pool during shutdown operations. This instrument has a remote chamber which can be placed on top of the reactor vessel with the necessary versatility to adjust the alarm point only slightly above the

background at the particular location. Proper use of this instrument will detect increases in radiation level by sounding a local alarm.

The regular monitron whose chamber is suspended from the north pool parapet also serves as a "backup" for the special monitron. The electrometer which serves this chamber is located on the second level balcony, north side.

The standard operating procedure for using these two monitrons during shutdown operations shall be as follows:

a. Immediately after lowering the reactor pool water, the chamber of the "special" monitron should be placed on the reactor tank top, and the adjustment made on the electrometer to give an alarm if a slight increase in the radiation level occurs.

b. The regular monitron will be adjusted with the alarm point ~10 mr/hr above the normal radiation background level. This operation is sanctioned by the ORR Health Physics representatives. If needed, the shift Health Physics representative may be contacted. Adjustments to the monitron are made as follows:

   (1) Adjust the meter reading to zero. This can be accomplished by turning the sensitivity selector knob to the zero position and adjusting the zero calibration pot by turning the slotted zero set until the meter indicator reads zero.

(2) Turn the sensitivity selector back to high or low, depending on the range desired, and begin to set the alarm point by turning the slotted zero set until the meter reads the desired alarm point level.

(3) Adjust the alarm calibration pot by turning the slotted alarm set down until the instrument alarms or up until the instrument stops alarming. Down on the slotted alarm set would be a turn in the counterclockwise direction, while up would be a turn in the clockwise direction.

(4) Turn the sensitivity selector knob back to zero and adjust the meter reading to zero as described in step No. 1.

(5) Finally, turn the sensitivity selector knob back to the desired range of operation. It is always a good idea to check the sensitivity and alarm condition of the instrument after adjustment by placing the 80-mr/hr Co^{60} source stored in the Health Physics office to the chamber of the instrument.

During the shutdown, activities may be such that the pool level is raised and lowered several times. Each shift engineer is responsible that the monitron be replaced on the reactor tank each time when pool level is to remain down for any appreciable time. In addition, each time the pool level is to remain up for any appreciable time, the alarm point on the regular monitron should be adjusted to 10 mr/hr.

In order to effectively apply the intended usage of the monitrons, each shift should include in their "shift checks" an item to assure that the pool monitron is set properly. This check should be made each shift by Operations personnel during shutdown week. During normal operation, the monitron is checked routinely by a Health Physics representative.

Following the completion of the shutdown activities and just prior to raising the pool level, the "special" chamber should be removed and placed in proper storage. The regular monitron should be placed back in normal operation, and Health Physics should check to assure proper operations.

1.4f. Power Outage - Checks to be Made

The loss of electrical power to the ORR Complex is a condition which must, on occasion, be tolerated; and, precautions have been taken to minimize the undesirable effects of such an incident. The outage can be of two types: (1) unscheduled, and (2) scheduled. Various components, (which are checked periodically following standard procedures) have been installed to provide protection when outages are unscheduled. For the power outages which are scheduled, additional precautions are taken. The check lists are to be used as guides in: (1) preparing the systems to limit the possibility of hazardous conditions in the building and also limit the possibility of damage to experiment equipment and reactor components, and (2) completing the necessary requirements for returning the reactor to power operation.

Postpower-Outage Check List for the ORR

The items listed below were prepared for the situation where the reactor was at power operation when the power outage was experienced and that the reactor will be returned to power immediately.

A. These items must be completed before the reactor power can be increased above N_L.

1. A 5-minute warm-up time on the safety level channels, after restoration of TVA power, must be observed.
2. Insert the fission chambers as required.
3. Recalibrate both log-N channels.
4. Perform the "Jordan Button Test" on at least one sigma amplifier.
5. Perform experiment checks as required by the experiment information book. This experiment information notebook should be checked for current requests.
6. Place the pool cooling system in service, assuring that the SB switch is reset and in "auto", and that the main pump, the secondary pump, and fans are restarted.
7. Place the reactor cooling system in service, assuring that the secondary pumps are restarted, the secondary fans are restarted, the primary bypass system is in "auto", and that the temperature setpoints have been established.
8. Restart the facility cooling pump (North or South) and establish flow to the North and South facilities.
9. Restart the pressurizable off-gas blower and establish a pressure of <-25 in. wg.

Example 1.2.

10. The reactor can now be returned to full power following prescribed procedures.

B. These items may be completed after full power operation is obtained.

1. Return the emergency diesel-generator system to "standby" condition.
2. Restart the Trane "centravac" air-conditioner unit and associated chilled water pumps, fan, etc.
3. Return the scrubber system to "standby" condition.
4. Restart the control room air conditioner.
5. Restart the overhead (roof) exhaust fans.
6. Return the gasoline pump and shutdown pump to "standby" condition.
7. Restart the building H&V units.
8. Restore the counting room H&V unit and air conditioner to normal operation.
9. Restart the pool demineralizer pump and place a demineralizer unit in service.
10. Restore degasifier to normal service.
11. The Nash-Hytor vacuum pumps should be returned to service.
12. Check all sump pumps and restart if necessary.

If a power outage occurs as a scheduled item, only those checks pertinent to "shutdown operation" need be checked at this time.

Example 1.2. (continued)

Prepower-Outage Check List for the ORR

The items listed below are to be completed if it is known that a power outage will occur. It is assumed that the reactor is not operating. If the reactor is operating, it should be shut down prior to the outage.

1. Announce over the PA system the expected power outage.
2. Experiment checks should be completed as required by the experiment information book. This experiment book should be checked for current requests.
3. Notify hot cells personnel of the planned outage.
4. Place log-N amplifiers on "ground-set" position.
5. Place the scrubber system in "Test" condition and close the caustic valve SV-3A.
6. Remove the Nash-Hytor vacuum pumps from service.
7. Remove the degasifier from service.

Example 1.3.

1.5. Disassembly and Maintenance of Reactor Components

1.5a. Removal of the Reactor Vessel Cover Plate

1. Lossen the hold-down clamp nuts and rotate the clamps 90°. Remove the nuts on the southwest corner of the cover plate and thread them, for safekeeping, on the top of adjacent bolts.
2. Move the cover plate to storage by using a chainfall on the one-ton crane.

1.5b. Removal and Replacement of Hold-Down Arms, Figure 1.1.

Reference Drawings

D-24090C, D-24091D, D-24092A, D-24093B, D-24094B, D-24095C, D-24096B, D-24097B, D-24098A, D-24099D, D-24100C, D-24101E, D-24102B, D-24103C, D-43558

Introduction

The proper handling of hold-down arms in the ORR core cannot be over-emphasized. It is necessary to check thoroughly the position of these hold-down arms after each movement since severe trouble can arise through bent shim rods if the rods should be raised without the hold-down arms being properly seated. The hold-down arms serve the dual purpose of holding the core pieces around the shim rod in position and serving as the upper shim-rod-bearing frame. At times it is necessary to remove the hold-down arms from the core for inspection. This action will be described also.

Raising and Lowering the Hold-Down Arms

1. Raising the Hold-Down Arms
   a. Assure that all seat lights are showing, that the drives are near the lower limit, and the drive unit is in the locked

UNCLASSIFIED
ORNL-LR-DWG 68258

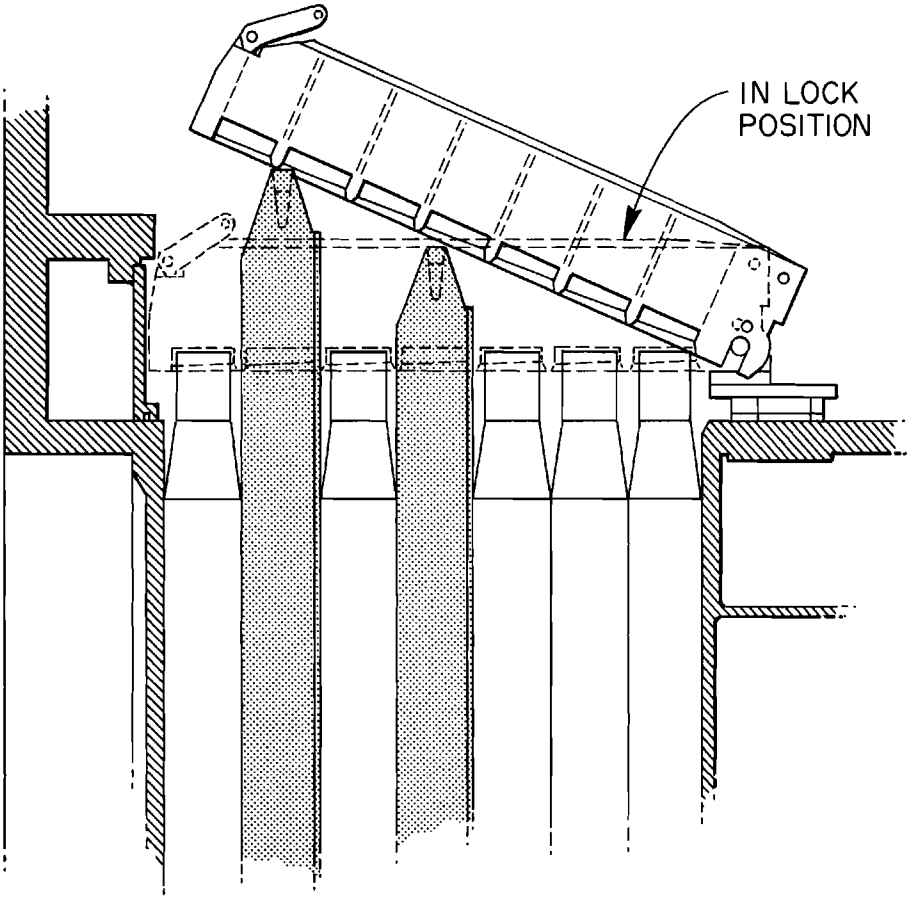

Fig. 1.1. ORR Hold-Down Arm

position. Assure that the magnet current is off. (The seat switch actuating the lever in the subpile room should be checked to assure that the shim-rod is actually resting on the seat-switch actuating rod.)

b. With a hook, engage the handle of the arm and gently raise the arm.

c. When assured that the hold-down arm is free, raise it further, tilting the arm east, and let it rest in the raised position.

2. Lowering the Hold-Down Arms

a. Assure that all shim-rods are in the seat position, as above. Assure that the magnet current is off.

b. Engage the handle of the raised hold-down arm, and lower it into the seat position.

c. Using a strong rod (similar to the fuel-handling tool), press down the hold-down-arm body (6 inches from the west end) and the movement can be felt as it goes into position.

d. Press down lightly on the handle of the arm, and the movement into the locked position can be felt.

e. To insure seating and locking, use a small hook and attempt to pull the hold-down-arm up by applying the hook under the hold-down-arm body, 6 inches from the west end. Any upward movement of the hold-down arm will indicate improper seating and locking.

f. For a final check, perform the following:

(1) Using the raise-test switch, raise the drives 6 inches.

(2) Using a hook, raise each shim rod (<u>one at a time</u>) to

insure free movement. While this test is being performed, post a man at the console to observe the CRM and have communication at all times.

With both hold-down arms fully seated and locked, the handles should be in the same position.

Removing and Replacing the Hold-Down Arms

1. Removing the Hold-Down Arms

   a. Engage the hinge latch located over the hinge on the east end of the arm with a hook, and pull slightly upward. When the latch is free, move the assembly eastward, and it will fall free from the arm and can be laid on the hinge support.

   b. Engage the hold-down-arm tool on the handle and raise the hold-down arm by the above procedure to a 45° angle.

   c. Engage a hook in the bar on the east end of the arm and apply a slight upward pressure.

   d. Gently apply an up and down motion with the hold-down-arm tool until the arm seems to lock in one position.

   e. By lifting with both the hold-down-arm tool and the hook, the arm will disengage from the hinge and can be lifted from the reactor tank.

2. Replacing the Hold-Down Arms

   a. Assure that all rods are on seat position, as above.

   b. Engage the hold-down-arm tool on the handle of the arm and lower the arm into the tank.

   c. Due to the balance of the arm, it will hang at approximately the right angle for engaging the hinge. Slide the arm over the hinge, and the slots on the arm should engage.

d. By applying an up and down movement with the hold-down-arm tool, the arm will lock into position on the hinge.

e. Lower the hold-down arm into seat position and lock as in the above procedure.

f. Engage the hinge latch with a hook and swing it over the hinge applying a slight upward pressure. The tips of the hinge latch will lock into slots in the hold-down arms.

g. Disengage the hook, and the hold-down arms are now ready for normal service.

1.5c. Removal and Replacement of a Shim-Rod Shock-Absorber Assembly

Reference Drawings

D-22462D, D-22463F, D-22464G, B-22472A

Introduction

The shock-absorber unit, located in the bottom plug, serves to cushion the face of a shim-rod. This unit also contains a guide bearing for shim-rod drive movement. Since it becomes necessary occasionally to replace a shock-absorber unit due to the collection of foreign materials in the unit, this procedure describes the technique to be used in the operation.

Prerequisite Conditions

1. A large stopper inserted above the shock absorber.
2. The shim-rod drive assembly removed.
3. A contamination zone established in the subpile room.

Removal of Shock-Absorber Assembly

1. Removal of Lower Bearing

   a. Disconnect the demineralized water tubing from the unit to be removed.

   b. Drain the water from the unit.

   c. Remove the seat switch support bracket.

   d. Remove the four bolts holding the lower bearing to the bottom of the shock absorber and remove the lower bearing assembly. The seat switch actuating the rod is now loose and should also be removed. Health Physics should monitor this removal since the bearing assembly is a possible collecting point for radioactive material.

2. Removal of Shock Absorber

   a. Remove four of the eight bolts holding the shock absorber to the bottom of the plug. Alternate bolts should be removed.

   b. Fit the spider of the removal jack into the holes where the above bolts were removed. Securely position the bottom collar of the jack on the support platform.

   c. Remove the remainder of the bolts holding the shock absorber to the bottom plug. The weight of the shock absorber is now being supported by the removal jack.

   d. Slowly remove the shock absorber, by screwing down the removal jack, until the upper portion of the assembly clears the bottom plug.

   WARNING: Health Physics surveillance is essential during this operation since this is a possible source of radioactivity.

Disassembly of Shock Absorber

The shock absorber is disassembled by removing the 3/8-in. allen-head screw and pulling the two pieces apart.

Assembly and Insertion of Shock Absorber

A shock absorber is assembled and inserted by reversing the above procedure.

1.5d. Removal and Replacement of ORR Fission Chamber

Reference Drawings

D-15957 and D-22473

Introduction

This procedure describes various precautions to be followed during the removal of the subject chamber components and lists the steps which must be followed during both the actual removal operation and the subsequent replacement. It is to be understood that unforeseen events could make parts of this procedure unapplicable; however, the personnel performing the operation should make only those changes which are absolutely necessary.

Description of the Fission-Chamber Facility

The fission-chamber facility is located directly under core position B-8. Access to the area beneath the core is through one of the shock-absorber holes (bottom plug) which is lined with 4-in. SS, schedule-40 pipe. For descriptive purposes, the facility can be divided into three parts: the drive, which will not be discussed; the moving part; and the fixed part.

1. Moving Part

   The moving part of the fission-chamber facility consists of the fission chamber itself, the shield plugs, the chamber housing, the chamber-housing end, and the related cables.

a. Fission Chamber

This chamber is described as a Westinghouse "Reliatron", No. WL-6376, and is located inside the leak-tight chamber housing. The chamber is located near the upper end of the housing and moves with the housing.

b. Shield Blocks, Item No. 8, Drawing D-15959

The 15 shield-blocks inside the chamber-housing are located below the chamber and are 2 1/16 in. in diameter by 6 13/16 in. long. These blocks are supported on a hollow tube which also serves as a conduit for the chamber leads. They are of two-part construction, held together by two 10-24-socket-head cap screws.

c. Chamber-Housing, Item No. 3, Drawing D-15960

This unit consists of a hollow, cylindrical, stainless steel B. W. G. chamber, type 304 No. 11 (120), 2 3/8 in. in diameter and approximately 12 ft long. As indicated by its name, it serves as a protective, leak-tight housing for the chamber. The bottom of this unit is attached to the chamber-housing which, in turn, is attached to the drive screw. The OD of the housing makes contact with and slides through the seal packing in the lower portion of the access hole.

d. Chamber-Housing End, Item No. 15, Drawing D-15959

This portion of the chamber-housing is a solid brass cylinder 2 3/8 in. in diameter by 3 in. long. The bottom of the housing end connects to the drive unit. Access holes for the chamber cables penetrate this unit.

2. Fixed Part

The fixed part of the fission-chamber facility consists of the guide tube, the shielding plug, the seal body, and the related seals and water lines.

a. Guide Tube, Item No. 2, Drawing D-15959

The guide tube is a hollow cylinder of 61S-T6 aluminum, 2 3/4 in. in diameter by 111 in. long. It is bolted to the lower shim-rod bearing support by use of a hold-down plate. The bottom of the guide tube extends into the bottom plug, ending in the shield plug approximately 16 in. above the subpile-room ceiling. This unit must be removed from above.

b. Shielding Plug, Item No. 9, Drawing D-15960

This portion of the facility is a hollow, thick-walled, stainless steel cylinder, type 316, 4 in. in diameter by 18 in. long. It is fastened to the seal body by set screws and is machined inside the upper end to receive the guide tube from above. It is removed with the seal body from below.

c. Seal Body, Item No. 12, Drawing D-15960

This unit, 6 in. by 3 1/2 in., is flanged to the bottom plug and is fastened to the shielding plug as described above. The lines which provide water to the seals are connected to the drilled flange; and, as the name implies, the seal rings are positioned inside the seal body.

Preparation for Removal

1. Core

The guide tube must be removed through the core from above. It is, therefore, necessary that the following preparations be made.

a. Remove B-9 experiment tube in accordance with instructions supplied by the experimenter.

b. Remove core pieces: fuel, Be, N_F tray, etc., from A-7, A-8, A-9, B-7, B-8, B-9, C-7, C-8, and C-9. This will provide visability as well as necessary operating room. Note: A-8 is isotope stringer No. 3.

c. Remove the end-box adaptor from position B-8. See Section 1.5f.

d. Lower the water to the grating level.

2. Tools

In addition to the regular tools used in the core, the following items will be needed.

a. An Allen wrench for 1/4-20 NC socket-head cap screw with a "T" handle at least 18 ft long.

b. A "pull rod" for the guide tube, approximately 18 ft long, with a "T" or ring at the upper end and threaded for approximately 2 in. at the lower end. Threads are to be 3/8-16 NC-2.

c. A "dummy" plug 2.373 to 2.375 in. in diameter by 7 ft long.

3. Subpile Room

Prepare the area as a contamination zone.

a. Block up the fission-chamber housing to prevent slipping, and remove the drive and related components.

b. Cover the adjacent rod drives and magnets with plastic to prevent wetting them.

c. Prepare the cables for handling with the housing during removal.

d. Determine that there is sufficient clearance below the sub-pile room grating for removal of the chamber housing. The total length will be approximately 13 ft.

e. Provide blotting paper and other supplies for handling the housing and other parts as they are removed. This portion of the facility could possibly be radioactive as well as slightly contaminated.

Removal

The removal of the components of the fission-chamber facility must follow the procedure outlined below. This procedure, in part, is dictated by the assembly itself but it is also designed to prevent loss of water, damage, or radiation exposure.

1. Fission-Chamber Removal

Due to the excessive weight of the shield blocks, it will be necessary to remove them by parts. This will require that the support tube be blocked up at intervals to facilitate removing the lead half-blocks or cylinders.

a. Remove the chamber-housing end by loosening the 6 flat-head screws. Be sure that the unit is blocked so that the shield plugs, support tube, and fission chamber will not be dropped.

b. Remove the cable guide, or, pull the cable through the housing end to free the parts.

c. Under radiation surveillance, lower the support tube and shield blocks until the lowest shield block can be removed.

d. Continue in stepwise fashion until sufficient shield blocks have been removed to lighten the assembly enough to allow removal of the chamber.

e. If shielding becomes necessary, improvising with sheet lead seems the most probable solution.

f. Store the chamber, chamber-housing end, guide tube, and shield blocks in the vicinity of the beam-hole-plug storage area.

2. Guide Tube (to be removed from grating level)

a. Determine that the core has been prepared as described earlier in this procedure.

b. Using the Allen wrench described earlier, loosen the two 1/4-in. guide-tube screws. These screws are located just above the lower bearing support and are on the northeast and southwest corners of the center section of the guide tube. The screws are fastened to the guide tube with roll pins and should not become lost.

c. It is <u>not</u> necessary to remove the hold-down plate or to loosen the four 5/16-in. screws which hold it to the bearing support plate.

d. Engage the threads of the "pull rod" with the threads in the hole in the top center of the guide tube and tighten sufficiently (at least 10 full turns) to pull the tube.

Note: Do not raise the guide tube above the top of the core without radiation-survey instruments for guidance in handling.

e. Pull the guide tube upward. It should slip out of the shielding plug and through the lower grid without difficulty. If it should be difficult to pull, recheck the guide-tube screws for looseness.

f. If radiation background permits, store the guide tube in the reactor tank for later reinsertion.

g. If radiation from the tube is too great, it may be necessary to raise the water level in order to move the tube to storage.

h. After the guide tube is in storage, install the special shock-absorber plug. It may be necessary to assign an operator to the job of holding this plug in place. This stopper tool prevents water leakage during the chamber-housing removal, and, if the chamber housing is to remain out for an extended period (>5 minutes), the bearing should be plugged with the tool described in section C-Tools. This, of course, cannot be used during the replacement of the lower bearing unit.

3. Chamber-Housing Removal (fission chamber inside)

Step 2 above, plugging the shock-absorber opening, assures that the reactor water will not enter the subpile room during removal of the chamber housing.

a. Determine that the subpile room has been prepared as in Section 3 of "Preparation for Removal", and that the stopper is in place with a man stationed to watch it.

b. Close the main seal water supply valve and all the individual seal supply and drain valves excepting the fission-chamber valves.

c. Drain the fission-chamber access tube and then break the tubing connection at the seal body.

d. Using proper radiation-survey instruments, slowly remove the fission chamber by pulling vertically downward. Be prepared to stop at any time should shielding become necessary.

e. If the radiation problem is not prohibitive, remove the chamber housing to the vicinity of the beam-hole-plug storage area.

f. Should shielding be necessary, it will probably be best to improvise with sheet lead.

4. Seal Body and Shielding Plug

It is anticipated that the seal body will be replaced with a new unit. Since the shielding plug is fastened to the seal body, the removal of the units is simultaneous.

a. The tubing connections should have been disconnected as described earlier.

b. Remove the eight 5/8-in. socket-head cap screws which hold the seal body to the bottom plug.

c. Lower the seal body and shielding plug from the bottom plug to a convenient working surface.

d. Attach the new seal body to the shielding plug.

e. Reinstall the shielding plug and seal body. Reconnect the seal water tubing.

f. If it is decided that the fission-chamber housing is suitable for reuse, it can be reinserted at this time.

g. If further work is necessary before the chamber-housing can be reused, insert the dummy housing and secure it against slippage. This will relieve the operator who is watching the plug.

Replacement

Assuming that the new seal body has been installed, the replacement procedure is essentially the reverse of the removal procedure. A check list is provided below.

1. Chamber-Housing
   a. Stopper in and an operator holding it.
   b. Access drained (seal water).
   c. Dummy housing out.
   d. Insert and secure housing.
2. Guide Tube
   a. Housing in and secured.
   b. Stopper out.
   c. Install guide tube; screws are southwest and northeast.
   d. Tighten screws.
3. Core and Subpile
   a. Reinstall end-box adaptor and core pieces.
   b. Clean up all areas.

1.5e. Replacement of a Control-Rod Drive Mechanism

Reference Drawings

D-22450, D-22453, D-22465, D-22473, D-24648, D-29773, D-33080, ORNL 17089

Assembly Components

There are six identical and interchangeable drive units in the ORR which have the following main components:

1. A Master motor, 1/8 hp, 115 v a.c., 1725 rpm, reversible, with a maximum withdrawal speed of six inches per minute for positioning of the control rod.

2. A coarse and fine synchro which indicates the position of the rod drive mechanism to the nearest .001 in.
3. A reducer assembly or gear assembly.
4. A drive screw.
5. A guide tube which houses the release mechanism.
6. A ball-latch release mechanism.
7. Four limit switches:
   a. Upper limit on the drive mechanism.
   b. Lower limit on the drive mechanism.
   c. Clutch switch indicating the aspect of the release mechanism.
   d. Seat switch indicating whether or not the control rod is actually seated.
8. An electromagnet which, through the actuation of the ball-latch release mechanism, supports the control rod.

Functional Description

For control of the ORR, movement of the control rods takes place in small vertical increments, requiring practice positioning. This movement is effected by driving a lead screw, to which the guide tube is attached, by a reversible electric motor.

At the top of the guide tube, there is the assembly composed of eight stellite balls which occupy one of two positions: either extended from the guide tube wall by approximately .075 inch to give an OD of ball circle of 2.021 inches or withdrawn just below the surface of the guide tube.

When the balls are extended, they engage a shoulder on the inside of the piston section of the control rod, and, as the drive mechanism is raised, the balls bear the weight of the rod.

When the drive mechanism is lowered, the control rod follows the unit down under the force of gravity and the hydraulic force of the cooling water. If the rod should stick, the balls would pull away from it as the drive is lowering; however, a safety head assembly (cross) is provided above the balls and engages the top side of the control-rod shoulder and pulls the rod down to its lowest position.

At any time the balls are withdrawn, there is no support for the control rod and it will normally fall to the bottom of its travel.

The actuation of the eight balls is extremely critical since upon this mechanism depends the quick release of the control rod which in turn affects a quick shutdown or scram of the reactor.

Operation of the ball release is effected by a cam action of a plunger with a tapered shoulder, forcing the balls into tapered holes when the plunger is raised by a push rod.

When the push rod is not raised, it is held in the down position by a heavy coil spring. In this down position, the balls fall or roll into their respective tapered holes. The balls can be extended only when they are below the shoulder of the control rod and at the lower position of the drive when the tension of the heavy coil spring is removed. This allows a small compression spring to raise the push rod driving the balls into their extended position.

In this reset operation, the drive mechanism compresses the heavy coil spring allowing the small compression spring to raise the push rod and the magnet keeper, thereby extending the balls. The lower end of the push rod extends through the core of an electromagnet. The armature, in the form of a disc, is attached to the push rod. When the push rod is

raised, this armature comes in contact with the face of the electromagnet and is held there by the magnetic field when the coil of the magnet is energized. This force holds the push rod in this "cocked" position as the drive mechanism is raised.

When the magnet is de-energized, the large coil spring which is compressed and exerting a force downward, pulls down on the push rod allowing the balls to retract, thus releasing the control rod which drops.

When the control rod is seated, it depresses a 3/16-in. diameter push rod which transfers this displacement through a bellows seal at the bottom of the shielding plug flange to a micro switch, thereby giving an indication that the control rod has seated.

Procedure for Removal of a Drive Unit

1. Set up a contamination zone at the subpile room.
2. Remove the four adjacent fuel elements and the shim rod according to Section 3.4d.
3. Run the drive unit up to the upper limit.
4. Remove the safety head assembly (cross) using the cross removal tool.
5. Run the drive unit down to the lower limit of travel.
6. Install the drive mechanism service tool (stopper) into the top of the shock absorber.
7. De-energize the L-1 and L-3 electrical circuits (L-1 - clutch, lower limit, and upper limit switches; L-3 - synchros).
8. Unplug the master motor from the receptacle on the switch mounting plate in the subpile room.

9. Close the valves on all lines to the drive unit seals (green handles), wiper rings (blue handles), and drains (red handles) with one exception; the drain valve on the line of the unit to be removed must be left open so that the water in the shock absorber after the stopper tool was installed can drain out. Close the valves on the fill and drain lines to the plug; these are located near the ceiling on the north side of the platform. (Reference drawing D-33080)

10. The cord housing must now be raised to facilitate the disconnection of the magnet and clutch switch. Remove the 4 machine screws (no. 10-24 NC-2 x 1/2 in.) from the bottom of the housing and lift up, allowing access to the terminal strip on the clutch switch bracket. Tie off the housing about one foot below the bottom plug so that it does not interfere.

11. The electrician should now disconnect the coiled wire assembly from the terminal strip, uncoil it from the guide tube, and tape it to the switch mounting plate so that it does not interfere. At the same time, disconnect the magnet and clutch switch leads from the terminal strip.

    NOTE: The brown insulated wires are the magnet leads, and the white insulated wires are the clutch switch leads.

    Disconnect the wires from the fine and coarse telesyn generators. NOTE THE EXACT POSITION OF EACH WIRE REMOVED.

12. Support the guide tube and magnet assembly using an appropriate clamp around the guide tube and a rod approximately 4 ft long by 1/2 in. diameter.

13. Uncouple the drive-screw and fittings from the magnet jacket by removing the 3 set screws (3/8-16 NC 2 x 3/8 in.), and then run the drive screw down by hand.

14. Remove the release and reset springs and the magnet keeper by unscrewing the 2 lock nuts (5/16-24 NF-2 Brass) from the push rod; the springs and keeper will drop off.

15. Remove the clutch switch assembly by removing the 3 cap screws (No. 10-32 NF-2 x 1/4 in.) from the magnet clamp and remove the clamp; then, remove the 3 machine screws (No. 10-24 NC-2 x 5/16 in.) from the clutch switch bracket and lift it off.

16. Remove the magnet jacket by removing the set screw (No. 10-32 NF-2 x 3/16 in.) and rotating the jacket counterclockwise until the jacket is loose and drops off.

17. Remove the magnet by rotating counterclockwise until loose.

18. Remove the indicator clamp from the bottom of the drive screw.

19. Remove the telesyn generators and brackets by removing the 2 cap screws (3/8-16 NC-2 x 2 in.) and lowering the unit. The meter stick is also removed at this time; it is held in place by one of these screws.

20. Remove the reducer assembly (gear box) by removing the 2 cap screws (3/8-16 NC-2 x 2 in.) and rotating the assembly until the Boston coupling to the master motor is uncoupled. Lift up and remove the gear box and drive screw from the platform.

21. The switch mounting plate assembly can now be moved aside by first removing the 2 cap screws (1/2-20 NC-2 x 3/8 in.) at the top of the assembly and one cap screw (5/16-18 NC-2 x 1 1/4 in.) at the bottom of the assembly.

22. Place plastic bags or suitable covering over the other drive units to prevent any water from getting on the magnets when the guide tube is pulled from the bottom plug.

23. Remove the grating immediately below the platform.

24. Loosen the cord housing described in 10 and set it on the platform. (It will now be in position when the guide tube is reinserted.)

25. Check the drain line, below the grating level in the southwest corner, for water flow. If any water is still draining, recheck the stopper tool for proper sealing. There should be no flow if the stopper tool has been inserted correctly. If there is no water flow, the unit is now ready to be lowered out of the bottom plug.

26. While holding the guide tube up by hand, remove the supporting apparatus described in step 12 and lower the tube slowly.

    NOTE: As the unit is removed from the plug, some contaminated water which did not drain from the shock absorber section will leak out. Health Physics coverage is needed during removal of the drive tube.

    An inspection sheet, Example 1.4, has been prepared and should be completed after removal of a drive unit and also prior to installation of a new or reworked unit. This is a check on the critical dimensions and general condition of the release mechanism.

Procedure for Insertion of a Drive Unit

The insertion of a drive unit requires that the procedure outlined in the above section be followed in reverse order with the following additions:

ORR RELEASE MECHANISM
INSPECTION REPORT

Unit No. _____

Core Position _____

Assembly for Installation

Date _____

Millwright _____

Engineer _____

Diameter of ball ring in extended position _____

Condition of head _____

Type of head and number _____

Condition of plunger _____

Type of plunger and number _____

Critical dimensions on plunger:

Top of plunger to top of 45° angle _____

Top of plunger to bottom of 6° angle _____

Top of plunger to bottom of shoulder _____

Measurement: Top stop to top of plunger with balls extended _____

Condition and number of magnet _____

Condition of bellows _____

Condition of magnet keeper _____

Condition of external drive tube _____

Remarks _____

Disassembly After Removal

Date _____

Millwright _____

Engineer _____

Diameter of ball ring in extended position _____

Condition of head _____

Type of head and number _____

Condition of plunger _____

Type of plunger and number _____

Measurement: Top stop to top of plunger with balls extended _____

Condition and number of magnet _____

Condition of bellows _____

Condition of magnet keeper _____

Condition of external drive tube _____

Remarks _____

Reason for removal _____

Example 1.4..

1. In step 14, replacement of the release and reset springs, assemble the forward nut hand tight, then loosen one-half to one turn and lock with the rear nut.
2. In step 13, the drive-screw and fitting should be coupled to the magnet jacket by one screw only until after the shim rod has been placed in position and the rod engaged by the safety head assembly.
3. After the drive unit has been completely installed, the shim rod may be inserted (following ORR Procedure, Section 3.4d) into the proper position and the rod engaged by the safety head assembly as follows:
   a. Loosen the set screws on the magnet jacket allowing rotation of the guide tube assembly freely around the drive screw and fitting.
   b. Place the locking mechanism in the unlocked position as described in ORR Procedure, Section 3.4d.
   c. While lowering the shim rod, rotate the guide tube assembly until it is determined that the shoulder inside the piston section of the rod is freely moving past the safety head assembly. This is the correct setting for the unlocked position. Without moving the guide tube, tighten the 3 set screws on the magnet jacket to the drive screw and fitting.
   d. Place the locking mechanism in the locked position, and lift the shim rod to test that the mechanism is indeed in the locked position.
4. The selsyn position indicators can now be zeroed. The shim rod should be raised with the drive unit until the slightest movement

of the seat switch actuator is noticed. This is the zero position. Loosen the cap screws (10-24 NC-2 x 5/8 in.) on the telesyn clamp which holds the generator to the bracket. There are 4 screws on the coarse synchro and 3 on the fine synchro. Station an operator at the control desk to observe the reading on the selsyn indicators. Rotate the generator until the zero position is noted on the indicators at the control desk. Reclamp the generator in this position. The same procedure is followed for both the fine and coarse synchros.

5. A thorough checkout of the drive unit must now be made, following Section 2.5c, which sets forth the criteria of acceptability.

1.5f. Inserting or Removing an End-Box Adapter in the ORR Core

An end-box adapter is a stainless steel lattice component used to adapt a shim rod position in the lower grid for fuel elements. It is normally used in all twelve possible shim rod positions except those six which contain shim rods. The shim rod positions of the lower grid are slightly larger than the regular fuel element positions, therefore, the end-box adapters are used to size these openings to accommodate the fuel elements. A special tool, fabricated for use in handling these end-box adapters, is of sufficient length to be used from the pool bridge. The tool is attached to the adapter and locked securely prior to removing the adapter.

It is necessary that the insertion or removal of an adapter be done in the following order.

1. Remove the core pieces from around the position containing the adapter (all 8 pieces).

2. If the adapter is to be transferred to another core position, ready the position to accommodate the adapter by removing the surrounding eight core pieces.
3. Lower the tool into the adapter to be removed, rotate the knob on top of the tool clockwise to lock the tool to the adapter.
4. Both the tool and adapter can be raised. The end-box adapter can be either transferred to another position or removed from the reactor vessel and stored under water in the pool.

1963

2. INSTRUMENTATION AND CONTROL

2.1. Introduction

The development of reactors introduced nuclear-instrumentation problems which were new to the instrument engineer and the solving of which usually required the efforts of specialists. As a consequence, process instrumentation came to be differentiated from nuclear instrumentation in the design of reactors. Instrumentation at the ORR is so divided; however, it should be remembered that a reactor functions as a complete system and no one variable should be overemphasized. Most engineers and scientists are aware of the consequences of the loss of nuclear measurement and rod control; but, they may need reminding that the consequences can be just as disastrous with the loss of coolant flow and the coolant-flow meter.

In keeping with the above discussion, the importance of the instrumentation associated with the various research experiments also cannot be overlooked. Here again the consequences of loss of measurement and control could prove disastrous; and, therefore, at the ORR, experiment instrumentation must join with process and nuclear instrumentation in the function of safeguarding the reactor and its personnel.

To describe each instrument or even each instrument system would be a very difficult task and is beyond the scope of these procedures. It is more important that the major systems be described here and that those procedures which have proven essential to operation be presented. Further, it is assumed that the reader is familiar with the reactor and the terminology.

2.2. General

The installation and maintenance of instrumentation is the responsibility of the Instrumentation and Controls Division of ORNL. Engineers, foremen, and technicians from this division are assigned permanently to this task and similar duties at the LITR and OGR. It is the responsibility of the Operations Division to assist with this work when necessary and to participate in thoroughly checking each instrument and instrument channel for proper operation both after repairs and on a routine basis. Details of checkout procedures are given in Section 2.5.

As stated in the Introduction, loss of measurement or control might be disastrous. It follows that prevention of a disaster is one of the most important functions of instrumentation.

This is accomplished through electrical or electronic safety circuits which are so devised that unsafe conditions will result in a reactor shutdown or a reduction in nuclear power level. Such a reduction in reactor power level will generally either remove the source of possible trouble or greatly reduce it.

The safety circuits (power reduction and/or shutdown) employed at the ORR are labeled Setback, Reverse, Slow Scram, and Fast Scram. To avoid confusion, a brief and simple explanation of each is given below. Elementary diagrams of the electrical circuits involved are presented on ORNL Drawings RC2-1-3A through RC2-1-3H.

2.2a. Setback

This circuit is devised so that the actuation of instrument switches will result in lowering the demand setting (setpoint) of the automatic control system. This action continues until the cause is removed or until

certain low power interlocks are actuated. Under these (setback) conditions the control system will attempt to maintain the nuclear power equal to the setpoint.

2.2b. Reverse

Completion of the reverse circuit results in simultaneous insertion of all the shim-control rods through rod drive motor action. Automatic control of the reactor is discontinued when the reverse occurs.

2.2c. Slow Scram

In this action electrical circuits, employing relays and other electrical or mechanical devices, cause a loss of current to the electromagnets supporting the shim-control rods. The complete insertion of all the shim-control rods should occur ~~instantaneously.~~

2.2d. Fast Scram

This circuit employs electronic devices to vary the magnet current indirectly as the nuclear power or as the rate of power increase. Thus, the shim-control rods are dropped immediately when unsafe power levels are reached, or when the rate of power increase is too great.

2.3. Alarm Annunciator Panel

2.3a. General Description

Reactor instrumentation, through the alarm annunciator panel, brings to the attention of the operator any abnormal condition or disorder. Automatic setback, reverse, or scram may occur simultaneously or individually depending upon the seriousness of the malfunction.

The alarm annunciator panel consists of several stations, each of which is related to a particular variable or experiment. The stations themselves are nearly identical in construction and function and, for this reason, are described below in general terms. A detailed relationship between station and variable or station and experiment will be given later.

Station Description

An annunciator station consists of a signal can which is mounted behind two small translucent panels called station sections. One section is red or yellow; the other is white. A yellow section generally indicates that no setback, reverse, or scram will accompany an alarm. All stations are connected to the alarm horn.

Station Function

Any malfunction or abnormal condition resulting in a signal to the annunciator panel will:

1. Sound the alarm horn.
2. Cause both sections (white, and red or yellow) of the receiving station to be lighted.

If an automatic setback, reverse, or scram is also initiated:

1. Both sections, of the station indicating the action taken, will be lighted.

2. A setback, reverse, or scram should occur.

Alarm Acknowledge

Pushing the acknowledge button at the left side of the console will silence the alarm horn and result in one of the following conditions:

1. The white section of the offending station will be darkened, and the red or yellow section will remain lighted, indicating that the abnormal condition still exists, or
2. The red or yellow section will darken, and the white section will remain lighted, indicating that the abnormal condition no longer exists and that the annunciator panel should be reset.

Alarm Reset

If the abnormal condition clears after the acknowledge button has been pushed, the red or yellow section of the offending station will be darkened and the white section will remain lighted. The annunciator panel is then reset by pushing the reset button adjacent to the acknowledge button at the console at which time the white section will be darkened.

Operator Response

In the event of any alarm, the operator is to:

1. Press the acknowledge button only.
2. Observe the nature of the alarm to see if it results in a setback or scram.
3. Contact his supervisor immediately unless he has specific instructions to do otherwise.

2.3b. Process Annunciators--Detailed Description

Sixty-four alarm annunciator stations receive signals from process instrumentation. These stations are depicted on Elementary Diagram RC2-1-3G.

1. AP-1, Test Blocks

   This station alarms when any of the pump test blocks are removed. The test blocks are located behind vertical panel 10 in the control room. (CP-15, CP-16 and CP-17 in Terminal Box "A") Normally, test blocks are removed only during shutdowns as a precaution against inadvertent starting of the main pumps.

2. AP-2, Low Pool Temperature

   This station will alarm when the pool temperature is reduced to 85°F, causing relay contacts RC-28-2 to open. The action is initiated by a pressure switch TX-42C, which receives its signal from the pool temperature controller TC-42. TX-42C and TC-42 are located in the west end of the basement. Relay RC-28 is located in junction box JB-PX behind the vertical panel in the control room.

3. AP-3, Not in Use

4. AP-4, Not in Use

5. AP-5, Pool Demineralizer

   This station monitors the specific resistance of the pool demineralizer exit stream and alarms when the resistance drops below a setpoint which is variable and is usually set at about 80% of the normal operating level.

6. AP-6, Storage Tank Level

   This station alarms when the level in either storage tank falls below 10% of full scale. The signal is relayed to the annunicator panel from level switches LX-2 and LX-3 located in the pressure switch box (JB-PX) behind the vertical panel in the control room.

The primary elements are located in the instrument hut at the storage tanks.

7. AP-7, Pool Water Activity

This station alarms when the activity of the pool water rises to 30 mr/hr as measured by a probe adjacent to the inlet line at the pool heat exchangers. Switch RX-3, located in the pool activity recorder in the control room, relays the signal to the annunciator.

8. AP-8, Pool Water Resistivity

Poor quality pool water will sound this alarm. The setpoint of the activator is variable and is usually set at 80% (700,000 ohms) of the normal operating level. The signal is relayed through RE-2, at the pool demineralizer, to switch AX-2 located in JB-PX.

9. AP-9, Pool Temperature $>95^{o}F$

The signal to this annunciator comes from pressure switch PX-42D on the pool cooling panel near the pool heat exchanger in the basement. The pressure switch is connected to the output line from the pool temperature transmitter TT-42. This alarm should occur only when the capacity of the pool cooling system is exceeded.

10. AP-10, Pool Level

This annunicator alarms when the level of the water in the reactor pool, center pool, or west pool drops eight inches or more below the overflow point. The alarm signal is initiated by float switches (one in each pool) and is also relayed to a local alarm on the north side of the parapet between the reactor pool and the center pool. The alarm must be acknowledged locally.

11. AP-11, Reactor Pressure

This annunciator station is actuated when the reactor inlet pressure drops below 6 psig. Pressure switch PX-38, located in the north facility pump cubicle, actuates the alarm.

12. AP-12, Facility Cooling

This annunciator can receive signals from several sources. Pressure switch PX-39, located in the north facility pump cubicle will cause an alarm on pump failure. FS731A1 and FS731B1, located on the inlet line to the South Facility 5-ft plug and annulus, will cause an alarm if the flow through the plug and annulus decreases to 75 gpm. FS751A1 and FS751B1, located on the inlet line to the South Facility 24-in. annulus, will cause an alarm if the flow through the annulus decreases to 65 gpm. FS302A1 and FS302B1, located on the inlet line to the North Facility, will cause an alarm if the flow through the North Facility decreases to 55 gpm. All of the above flow switches are located on their respective recorders on panels in the basement beneath the facilities involved. On further reduction of flow, a setback will result followed by a back-up reverse if there is less than a 100 second negative period. These action points are as follows:

Sensors	Action	Action Point	Recorder Switches
South (5-ft plug and annulus)			
FS731A2, B2	Setback	≦61 gpm	RS-70, RS-72
FS731A3, B3	Back-up reverse	≦59 gpm	RS-71, RS-73
South (24-in. annulus)			
FS751A2, B2	Setback	≦51 gpm	RS-74, RS-76
FS751A3, B3	Back-up reverse	≦49 gpm	RS-75, RS-77
North			
FS302A2, B2	Setback	≦71 gpm	RS-78, RS-80
FS302A3, B3	Back-up reverse	≦69 gpm	RS-79, RS-81

13. AP-13, ΔT

This alarm is actuated when either of the ΔT recorders indicate 13.0°F. Should the ΔT continue to increase, a setback followed by a back-up reverse will occur at 13.5°F and a slow scram at 15.5°F. Thermohms in the inlet and exit lines of the reactor primary system are the primary elements. Their output signal is relayed to the ΔT recorders. RS-18, RS-19, and RS-20 in the No. 1 ΔT recorder and RS-47, RS-48, and RS-51 in the No. 2 ΔT recorder are the switches which initiate the safety action.

14. AP-14, Reactor Demineralizer Resistivity

This station receives its alarm from the resistivity meter located in the basement pipe tunnel. Pressure switch AX-4B in box JB-PX relays the alarm signal at a resistivity reading of 900,000 ohms. Primary elements are located in the respective outlet lines at the reactor demineralizers. The proper primary element is selected by positioning a selector switch located in the pipe tunnel.

15. AP-15, Reactor Outlet Temperature

This station receives an alarm signal when the temperature of the reactor exit water reaches 134°F. TE-43 and TE-44 in the pipe chase are the primary elements for the outlet temperature measurement. Contact RS-21 in the No. 1 outlet temperature recorder and/or RS-52 in the No. 2 outlet temperature recorder initiate the alarm. Should the reactor outlet water continue to increase in temperature, a setback will occur at 135°; and a scram will occur at 140°. The recorder switch contacts are: No. 1 recorder, RS-22 and RS-23, and No. 2 recorder, RS-53 and RS-54. The usual back-up reverse is present, being accomplished by RS-29 and RS-56 respectively, providing the reactor is on a negative period greater than 100 seconds.

16. AP-16, Reactor Inlet Temperature

An inlet water temperature of <115°F or >120°F will initiate an alarm. Temperature switches TX-11A and TX-11B located in box JB-PX relay the alarm signal from the reactor water temperature controller. The primary element for the temperature controller is a temperature element located in line 110.

17. AP-17, Reactor Water Activity

This alarm occurs when the activity of the reactor water, as recorded in the control room (VB-1), reaches a level of 200 mr/hr. The signal is initiated by contact RX-1 located in the recorder. The primary element for this recorder is a probe located near line 110, in the venturi pit.

18. AP-18, Reactor Water Resistivity

This annunicator is actuated when the specific resistance of the reactor water decreases to 300,000 ohm/cm. Pressure switch AX-1 actuates the alarm and receives its signal from the Solu-bridge instrumentation located in the pipe tunnel. The primary element is located in a by-pass line connecting line 110 (reactor water return) to the facility pump suction.

19. AP-19, Main Flow

Pressure switch FX1A-1 (RS-15) actuates this station through relay R79-3 when the main flow drops to 17,000 gpm. A setback will also occur if any one of the three safety recorders indicates a power level above 60% of N_F. Should the flow continue to decrease, a slow scram will occur at 14,000 gpm if the reactor is not in "test". The signal to scram circuit No. 1 (drop-out) is relayed through pressure switch FX1A-3A (RS-17). The signal to scram circuit No. 2 (make-up) is relayed through pressure switch FX1A-3B (RS-17X). The pressure switches are located in the instrument room at the pump house and are connected to the output of the main flow differential pressure cell. The primary element is the venturi in the return water line at the pump house.

20. AP-20, Low Shutdown Coolant

This annunciator is actuated when the reactor flow drops below 1000 gpm. The signal is relayed through pressure switch FX1B-1 (RS-25).

21. AP-21, Freezing

This alarm is initiated by bulb-type sensing elements in the exit air streams of the Trane heat exchangers. When the outside

temperature drops to 35°F, thermo switches relay the signal to the annunciator. Freezing precautions are then carried out by the operating personnel.

22. AP-22, Water Test

This alarm is actuated when the "raise-test" switch is in the "test" position. The "test" mode of this switch bypasses the scrams from low flow, ΔT, and exit temperature permitting operation at power levels up to $\sim N_L$ with variable flow rates. The low level scram circuit for No. 3 safety channel is also effective when the reactor is in the "test" mode.

23. AP-23, No Pool Cooling Pump

An alarm occurs when the pool cooling flow decreases to 550 gpm. This alarm is initiated by relay contact RF-3B which is actuated by pressure switch FX-3B. Pressure switch FX-3B receives its signal from the differential pressure cell which measures the pool cooling flow (line 203 in the basement). Relay RF-3B and pressure switch FX-3B are located in JB-PX. Relay contact RF3B-1 also opens, breaking the run circuit. A reverse will result if the log-N instrument is recording above 1.8 N_L.

24. AP-24, Emergency Pump Blocked Out

This station alarms when the emergency pump is blocked out. This is accomplished by removing the block from its receptacle in the face of the graphic panel.

25. AP-25, Low ΔP

An alarm and setback will result if the pressure drop across the core is $\leq$21.4 psig. The signal is initiated by pressure switch

PdX55A (RS-66) which is connected to the output of the Δp transmitter. This instrumentation is located in the basement near the entrance to the pipe chase.

26. AP-26, Reactor Tower Fans

The alarm is initiated if either or both of the reactor fan controls are de-energized. This is accomplished through contacts RF1-2A and RF2-2A located in the reactor tower pump house.

27. AP-27, Degasifier

This alarm is initiated by PX-53 if the degasifier pressure is greater than -20 inches of mercury. It can also be initiated by LX-5A or LX-5B if the water level in the degasifier is greater than 1/4 in. from the top of sightglass or less than 2 in. from bottom of sightglass. This alarm circuit is also activated upon loss of control power to the pump through contact $K_{L5}A$.

28. AP-28, High Temperature, Pump Bearings

The alarm is actuated upon circuit failure or when the bearing temperatures of the shutdown pump and/or the primary pump(s) exceeds a safe level (94°C). Primary elements are located on the pump bearings.

29. AP-29, Catch Tank

This annunciator is related to the normal off-gas catch tank which is located in the east end of the basement. The alarm is sounded when the tank is approximately 3/4 full of water. The actuation is accomplished by relays in a junction box above the tank. The relays are controlled by level switches in the tank.

30. AP-30, Not in Use

31. AP-31, Pool Tower pH

This alarm is actuated when the pH recorder in the control room indicates a low pH (6.75) or a high pH (7.75) or a power failure in the pH recorder power. Recorder switches AX-6B and AX-6A initiate the low and high alarms, respectively.

32. AP-32, Note in Use

33. AP-33, Exchanger Pump Pressure

This alarm is actuated when the reactor secondary water pressure is less than 25 psig. The signal is relayed by a pressure switch (PS-56) located in the pump discharge header of the secondary pumps. This indicates failure of the secondary pumps.

34. AP-34, Reactor Tower Basin Level

This alarm sounds when a high (LX30A) or low (LX30B) water level condition exists in the tower basin. The signal is relayed from level switches located in the basin.

35. AP-35, Exchanger Secondary Temperature

The alarm is actuated when the secondary average temperature to the reactor heat exchangers is below 80°F (TX47D1) or above 123°F (TX47D2). The instrumentation is located in the reactor tower pump house.

36. AP-36, DC-3

This alarm occurs when the No. 3 d-c pony motor is out of service or if an abnormal condition exists such as high or low battery voltage, high or low battery current, or if the charger to battery disconnects are opened. The controls are located in the No. 3 main pump cell. The alarm also sounds if the "test" button in the control room is pushed.

37. AP-37, Tower Basin Temperature

The alarm sounds if the temperature of the water in the reactor tower basin is below 65°F (TX48E) or above 88°F (TX48F). The instrumentation is located in the reactor tower pump house.

38. AP-38, DC-2

Same as AP-36 except for No. 2 d-c. unit.

39. AP-39, Reactor Tower pH

The alarm occurs when the pH of the reactor secondary water drops below 6.75 (AS-7B) or rises above 7.75 (AS-7A). The switches are located in the recorder in the control room.

40. AP-40, DC-1

Same as AP-36 except for No. 1 d-c. unit.

41. AP-41, POG High Radiation

The alarm sounds if the radiation in the pressurizable off-gas system increases above 4.5 mr/hr as monitored by an ionization chamber (RE-62) located on top of the exit line from the filter pit. The signal is transmitted to an electrometer (RM-62A) and thence to a recorder (RR-62) in the control room. RS-62 on the recorder actuates the alarm.

42. AP-42, Reactor Secondary Radiation

The alarm occurs if the radiation background increases above 0.8 mr/hr as measured by the probe which is located outside the heat exchanger pit near the reactor secondary exit line.

43. AP-43, Not in Use

44. AP-44, POG High Pressure

Pressure switches PS-61A and PS-60A are actuated when the pressurizable off-gas pressure increases to $\geqq$-25 inches wg. A

setback is received through PS-61B (RS-86) and PS-60B (RS-84) when the pressure increases to ≧ minus 20-in. wg followed by the back-up reverse from PS-61C (RS-87) and PS-60C (RS-85) at pressures ≧ minus 19-in. wg.

45. AP-45, NOG High Pressure

Pressure switches PS-63A, PS-63B, and PS-63C actuated by PT-63, and PS-64A, PS-64B, and PS-64C actuated by PT-64 initiate alarm, setback and reverse. An alarm condition at this station occurs when the normal off-gas pressure increases to ≧ minus 25-in. wg. On further reduction of normal off-gas vacuum, a reactor setback is initiated at a pressure ≧ minus 20-in. wg. At a pressure ≧ minus 19-in. wg, a reverse will result providing the long-N period recorder does not indicate a 100 second negative period.

46. AP-46, Degasifier Activity High

This alarm is actuated when the radioactivity on the degasifier effluent increases to 55 mr/hr.

47. AP-47, Not in Use

48. AP-48, Not in Use

49. AP-49, Not in Use

50. AP-50, Not in Use

51. AP-51, Not in Use

52. AP-52, Not in Use

53. AP-53, Not in Use

54. AP-54, Not in Use

55. AP-55, Not in Use

56. AP-56, Not in Use

57. AP-57, Low Building Ventilation

The alarm sounds when the flow of air through the exit duct decreases to ~2500 cfm. The alarm is actuated by flow switches (FS59A and FS59B) located in the exit duct. The signal also initiates a setback simultaneously with the alarm.

58. AP-58, Scrubber Electrometer

This alarm is sounded if either or both scrubber electrometers indicate a significant change in radiation activity. The detectors are located as follows: In Building 3042, just above the control room entrance, having an alarm point of 75 mr/hr; and, on the cell-ventilation duct just up stream from the scrubber building, having an alarm point of about 7.5 mr/hr.

59. AP-59, NaOH Low Level

The alarm is actuated when the liquid level in the caustic hold tank at the scrubber reaches a point $\leqq$20 inches from the bottom. Level switches LS69A and LS69B located at the scrubber shack initiate this action.

60. AP-60, Emergency Pump Start

The annunciator is actuated when the air-driven pump at the scrubber is running. The alarm is actuated by flow switch 67C which is located in the discharge line of the pump.

61. AP-61, Sump High Level

The alarm sounds when the liquid level in the scrubber sump increases to a point 8 inches above the bottom. This is actuated by LS-66A located at the scrubber shack.

62. AP-62, Pump No. 1 Failure

The alarm sounds when the No. 1 pump fails to provide a pre-set minimum flow. The condition also starts the emergency air-driven pump.

63. AP-63, Sump Low Level

The alarm sounds when the liquid level in the scrubber sump decreases to a point ~2 in. above the bottom. This is actuated by LS-65B and LS-66B located in the scrubber shack.

64. AP-64, Pump No. 2 Failure

Same as for No. 1 above (AP-62).

2.3c. Control and Radiation Instrument Annunciators

Circuits for the annunciators described in this section are depicted on Elementary Diagram RC-2-1-3B. Station locations on the annunciator panel are also shown.

1. AN-1, Not in Use

2. AN-2, Experiment Reverse

This alarm occurs any time an experiment-reverse request is initiated. Relay contact R-27-1 relays the alarm signal to the station. At the same time, relay contact R-27-2 closes energizing the "reverse" relay R-17 (if the selected log-N channel is indicating above 1.8 N_L) and all rods should insert. It should be noted that an experiment-reverse request will not be initiated if a negative 100-sec period exists on the selected log-N-period recorder.

3. AN-3, Experiment Setback

This alarm occurs when an experiment-setback-request is initiated at any experiment. The signal is relayed to the annunciator station by relay contacts R-24Y-1. If the reactor is under servo control, a setback will occur; if in manual, the No. 6 rod is automatically inserted until the condition clears.

4. AN-4, Not in Use

5. AN-5, Instrument-Start, Trip-Out

This alarm is sounded when the reactor trips out of "instrument' start". Relay contact R64A-2 opens to initiate the alarm. It should be noted that this alarm will not clear until the "instrument start" request button is depressed or until $N \cong .6N_L$.

6. AN-6, Not in Use

7. AN-7, Monitrons

This alarm sounds when the radiation level exceeds N 7.5 mr/hr (as indicated by any of the monitrons tied into the ORR "trouble monitor" circuit if the monitron-level-selector switch is set at the "low" position). The "high" switch position removes the monitron from the annunciator circuit. See the "Background Radiation Survey" sheet for a list of monitrons and their locations.

8. AN-8, Constant Air Monitors

This alarm occurs when the air-activity level (indicated by any of the constant air monitors tied into the ORR "trouble monitor" circuit) exceeds the normal set point, $\sim$6000 c/min.

9. AN-9, Fast Scram

A fast scram occurs when the sigma bus voltage is increased to 43 1/2 volts. This corresponds to a safety level of about 1.45 N_F or a log-N period of 1 sec. The fast scram annunciator is actuated upon receiving a fast scram through contacts and relays in the sigma amplifiers.

10. AN-10, 5-Second Period

This alarm occurs when either the count-rate period recorder or the log-N period recorder indicates a period of less than 5 seconds. Recorder contacts RS-38 (R-61) on the CRM, RS-3 (R-55) on the No. 1 log N and RS-63 (R-55) on the No. 2 log N cause the alarm. Concurrent with the alarm, a reverse should be initiated by either the selected log-N period or the count-rate period. (If the selected log-N recorder is indicating above 1.8 N_L the count-rate-period reverse is inhibited.)

11. AN-11, Insert 5 Rods

This alarm is sounded when the servo-reverse-limit switch (LS-19) is actuated, provided the reactor is in "servo". Simultaneous insertion of all rods other than the servo controlled rod should occur. Relay contact R-52-1 closes, energizing "insert" relay R-15.

12. AN-12, 1.8 N_L In "Start"

This annunciator is actuated through switch RS-7 in No. 1 log-N recorder or RS-60 in No. 2 log-N recorder. The alarm will not actuate if the reactor is in "run". Concurrent with this alarm, a reverse is initiated.

13. AN-13, Safety Level

This alarm occurs when either of the three safety recorders indicate a level of $\sim 1.1\ N_F$. An automatic setback should accompany this alarm. Should this action fail to stop the level increase, a reverse should occur at $\sim 1.2\ N_F$.

14. AN-14, Safety Trouble

This annunciator brings the operator's attention to any troubles experienced in the safety amplifiers. "A" switches, located in the sigma amplifiers, relay the signal to the panel.

15. AN-15, Servo Withdraw Limit

This alarm indicates that the servo rod has reached the servo-withdraw-limit switch. Relay contact R50-5 opens to actuate the annunicator. It should be noted that this alarm is bypassed when the servo demand switch is in the "raise" position or the reactor is not in "run".

16. AN-16, Two Safety Troubles

This alarm is related to AN-14 in that if a second safety trouble is received the annunciator is actuated. Concurrent with this alarm, an automatic reverse is initiated.

2.3d. Experiment Annunciators

The experiment annunciator panel is designed to accommodate twenty-four experiment alarms with room for expansion. These annunciators are actuated through the experiment instrumentation and serve to warn the operator of trouble at the experiment. The exact nature of the alarm condition must be determined by observing the experiment instrumentation. Since all of the stations of the panel are quite similar, a general

description will be given here which will include the alarm, setback, reverse, and scram circuits. It should be noted, however, that all of these circuits are necessarily involved for every experiment.

Experiment Instrumentation

The instruments used by experimenters, particularly those related to the reactor control circuits, are carefully chosen for reliability and performance. As noted in the Introduction, the safety of the reactor and its personnel is as dependent upon the experiment instrumentation as it is upon the reactor instrumentation. For this reason, all experiment variables which are considered safety problems are dual monitored and double tracked. For example, in the case of a temperature variable measured with thermocouples, two thermocouples would be used with a recorder for each thermocouple; and each recorder would have two circuits to relay an alarm, setback, and/or reverse or scram to the reactor control circuit.

Experiment Switches ("E-Panel")

To prevent extensive wiring changes each time an experiment is inserted into or removed from the reactor flux, special three-position switches, or "E" switches, Figure 2.1, are used to effect reactor "tie in". These switches are located on a vertical panel, Figure 2.2, at the east end of the control room and are key operated. Their use is limited to the reactor supervisor or, during shutdown, to instrument engineers directly in contact with the supervisor. Each "E-Panel" consists of a complex of wiring and relays which enable signals from the experiment instrumentation to be converted to a specific action, i.e. alarm, setback and/or scram.

UNCLASSIFIED
PHOTO 49143

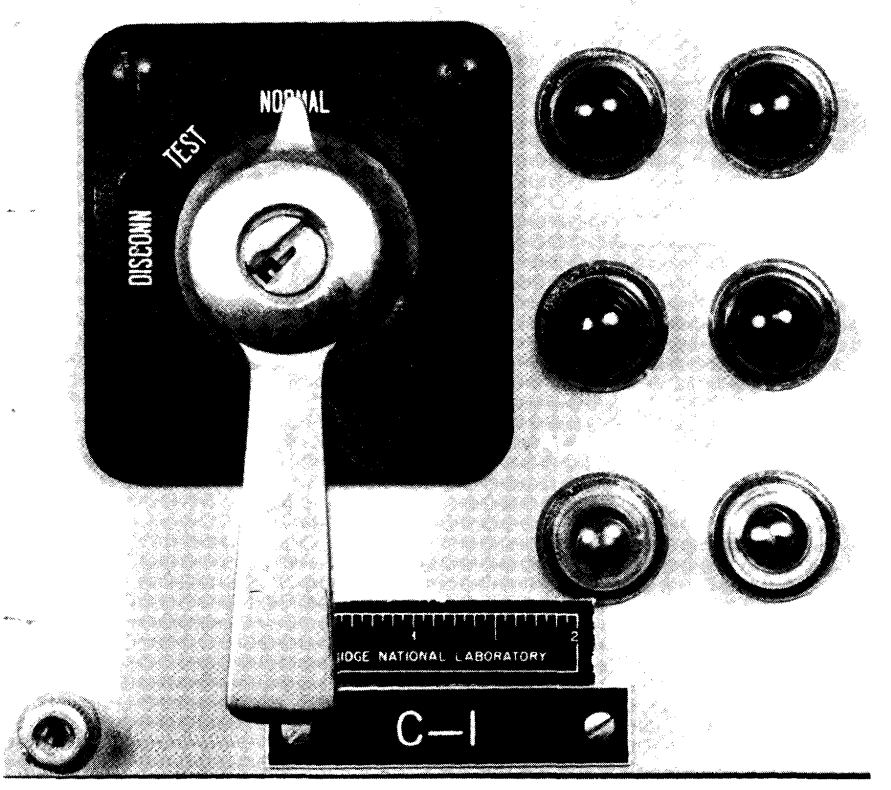

Fig. 2.1. "E" Switch

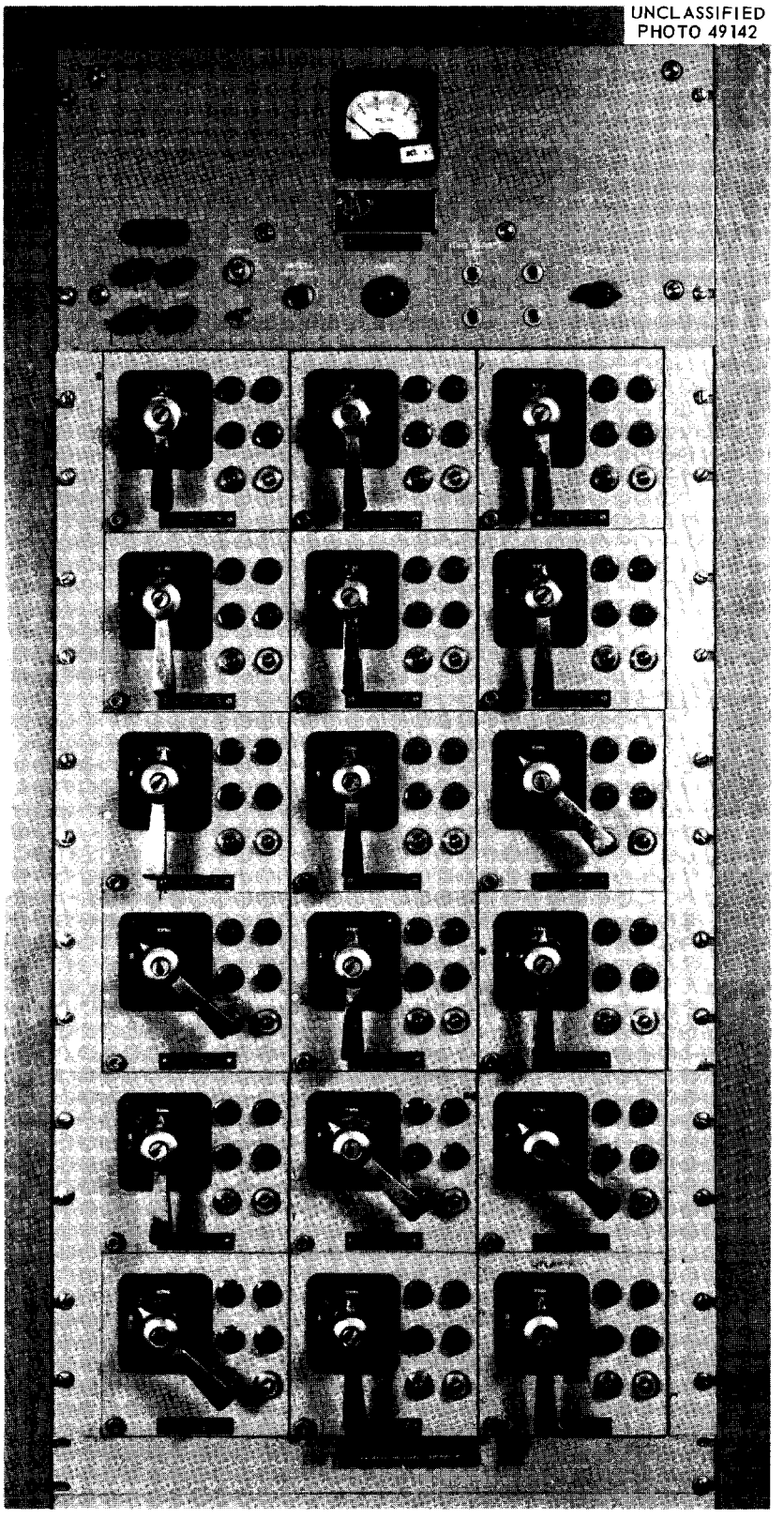

Fig. 2.2. Panel of "E" Switches

Normal, Test, Disconnect

The three switch positions are somewhat self-explanatory. The "normal" position is to be used any time the experiment is in the reactor. In this mode the experiment is connected to the annunciator panel and, if applicable, to the reactor control circuits. A light at the "E" panel indicating that power has been supplied should be lighted. The switch is not to be turned from this mode while the experiment is in the reactor unless special instructions are issued.

The "test" mode on the "E" panel allows the experimenter to simulate any desired condition (scram, setback, etc.) without affecting the reactor. During tests, the feedback of information from the control room is the same as if the experiment were connected to the reactor, except that the experimenter's "tie-in" annunciator will be lighted. In the "test" position, the control room annunciator station for the experiment will also remain lighted and should be covered with an opaque material if the switch is to remain in this mode during reactor operation.

The "disconnect" position completely severs the experiment power from the "E" panel. In this position, the "power" light should not burn. The control room experiment annunciator station, however, should be lighted and covered if the reactor is operating.

Experiment Alarm

Contacts in recorders or other devices at the experiment panel or apparatus serve to actuate local annunciators. Auxiliary contacts within the local annunciators open on alarm and, through the "E" panel, de-energize a relay (FR-100 series) to actuate the experiment annunciator in the control room. Alarms other than those associated with scrams,

reverses, or setbacks can be made local alarms only if the experiment is manned.

Experiment Setback or Reverse

The signal for a setback or reverse comes from contacts in the experiment instrumentation itself and not through the experiment annunciator as in the case of an alarm. A setback signal from a recorder or other device energizes a relay (RE-300 series) which in turn energizes relay R24Y (reactor setback) if the "E" panel is in the "normal" mode. Other contacts, within the same instrument, open to de-energize a relay in the RE-200 series and relay R-27 (reactor reverse) if the "E" panel is in "normal". An experiment reverse will not occur if the reactor period is experiencing a negative period greater than 100 sec as displayed by the log-N period.

Experiment Scram

A scram is initiated by contacts (two per instrument, one normally open and one normally closed) within the experimenter's recorders or other devices. The normally closed contacts open a circuit through the "E" panel to a relay (RE-400 series) which de-energizes relay R-28 if the "E" panel is in "normal". This results in a slow scram. The normally open contacts, similarly, cause a slow scram by energizing a relay in the RE-500 series which in turn energizes relay R-28X.

Instrument Trouble

(See 4.2e., Research Experiments)

Instrument Check-out

(See 4.2b., Research Experiments)

2.4. ORR Console

The control desk or console is located near the center of the control room and is so situated that the attending operator is normally facing the process and nuclear instrument panels, Figure 2.3 and 2.4. It is the purpose of this section to describe the various components that make up the console and to list the functions of each.

2.4a. Left Inclined Panel - Startup Components

Scram Switch

When not in "normal" position, this switch turns off the current to the magnets allowing all shim rods to drop.

Scram Reset

With the scram switch in "normal", the scram reset button must be pushed to get current to the magnets.

Key Switch

OFF: With the switch in "off" position, there is no power to the reactor controls for the startup of the reactor.

OPERATE: This position provides power to the reactor controls for the startup of the reactor. Note: Any time the key is in the switch, Reactor Operations Department personnel must be in attendance. The shift engineer should have the key in his possession should the control room be left unattended.

Evacuation Alarm Switch

This switch, when depressed, actuates the building evacuation alarm and is to be used in accordance with the evacuation procedure at any time an emergency arises.

UNCLASSIFIED
PHOTO 59470

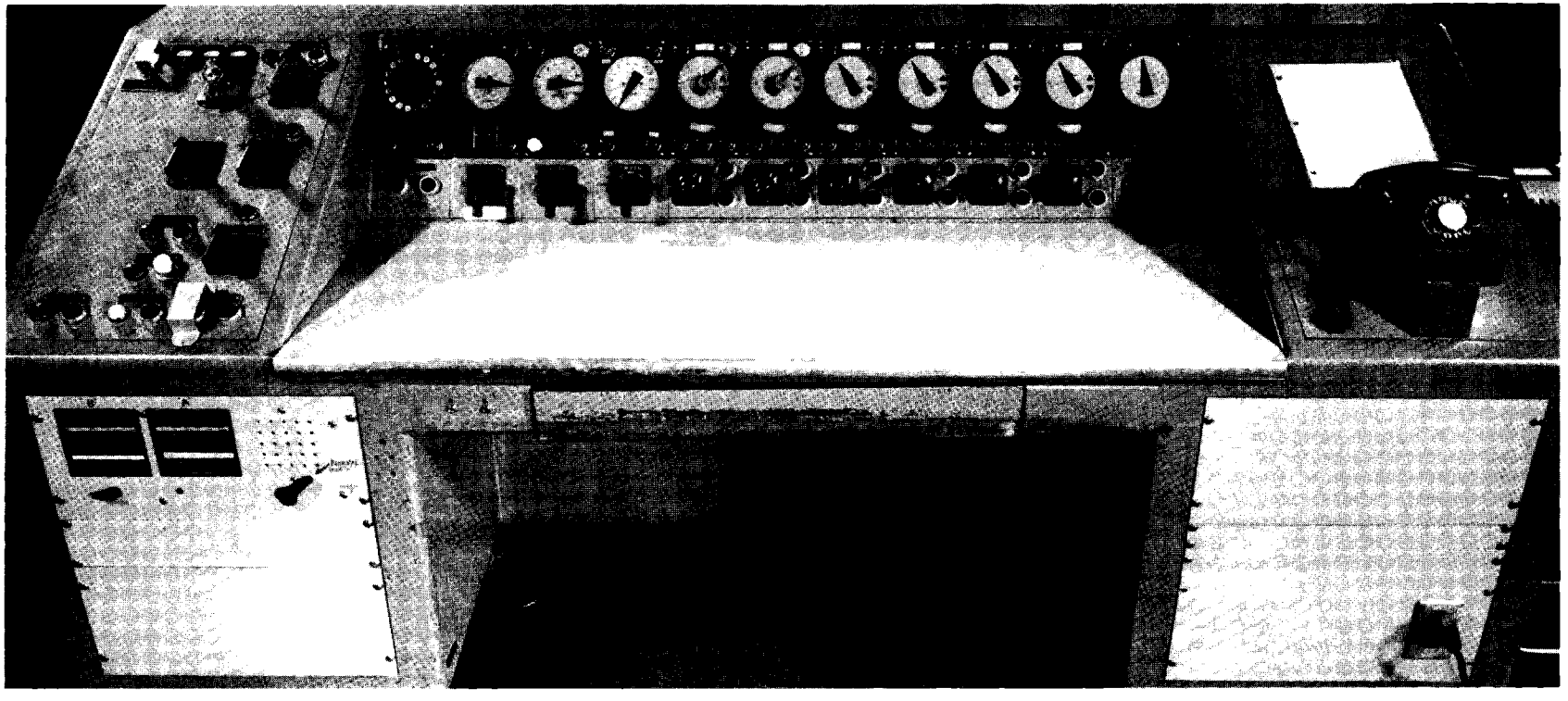

Fig. 2.3. Control Console

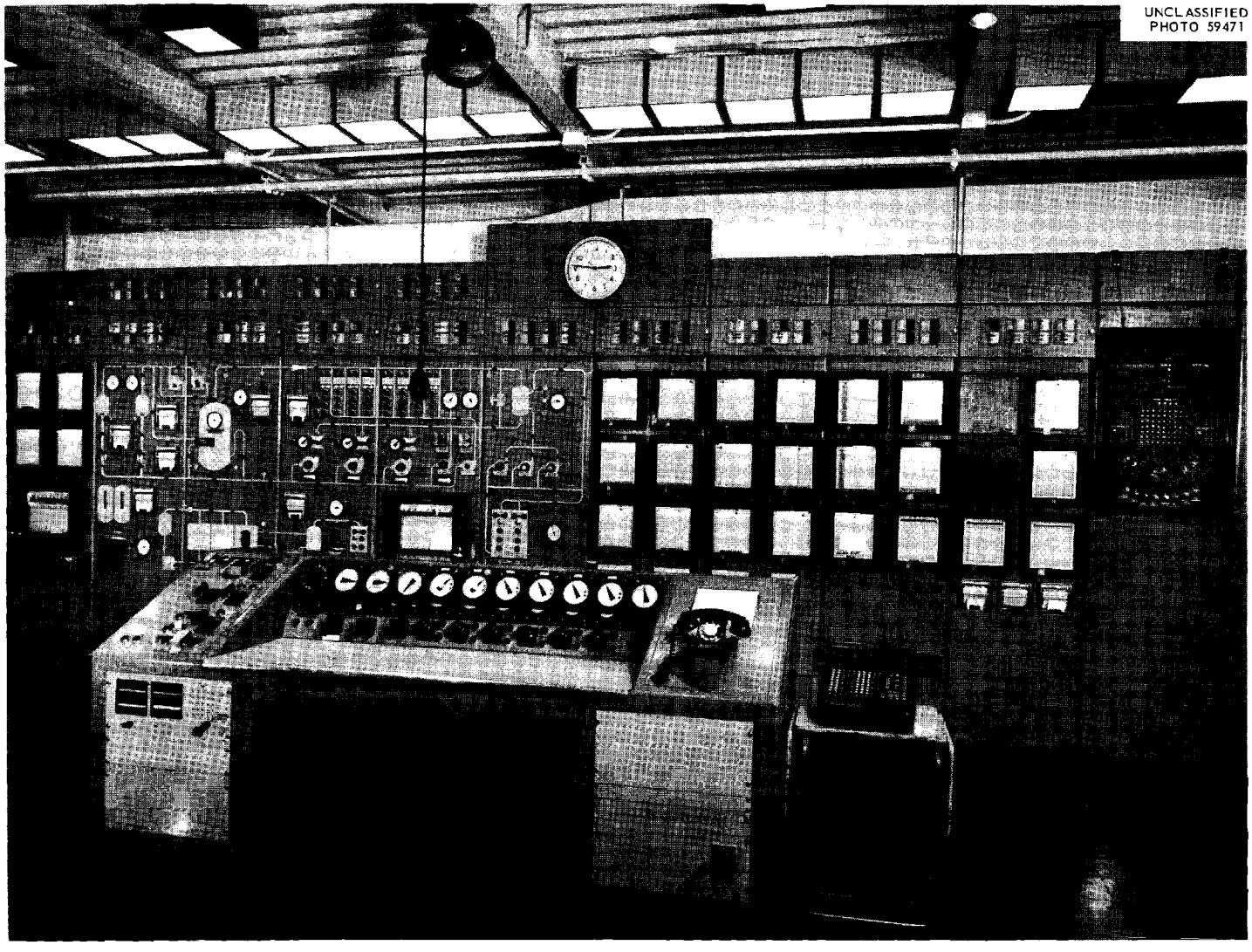

Fig. 2.4. Process and Nuclear Instrument Panels

"Raise-Test" Switch

RAISE: With the switch in this position the current to the magnets is turned off. This permits the raising of the rod drive assemblies without the shim rods attached when used in conjunction with the shim rod mode switch on "raise".

TEST: Use of this position permits the bypassing of the scram circuits of both the main flow and Δp across the reactor. It permits the check out out shim-control-rod drives and low-power operation without water flow. In addition, this "test" position effects a change in circuits whereby the sensitivity of the No. 3 safety channel is increased by a factor of 100.

"Bypass-Reverse" Switch

BYPASS: This is a spring return position that allows less than a 30-sec period on the count-rate and log-N period recorders during the startup of the reactor. It also allows less than a 20-sec period if the "fast-period permit" button has been depressed during startup. It also allows use of group rod withdraw after the reactor has been placed in "run". The 10-sec period inhibit on the count-rate-period and log-N period recorders cannot be bypassed.

REVERSE: This is a spring return position that inserts all rods at once. The reactor, if in "servo", is tripped to "manual".

Group Rod Withdrawal Switch

INTERMITTENT: In this position, those rods that are in either "preferred" or "normal" position will be withdrawn intermittently if the reactor is in "operator start" and a group withdraw permit is obtained. A timer control supplies power to the shim rod motors one second out of six seconds. The rod-in-motion light, located in the dial of the rod

position indicator, blinks on and off with the application and removal of power to the motor. When the period decreases below 30 seconds, this position is tripped out and must be reset by turning the switch to "neutral" and back to "intermittent".

HIGH: This is a spring return position and must be held in position by the Operator. After the log-N recorder exceeds 0.001 N_L, log-N confidence, this position becomes active and will allow all six rods to be withdrawn at full speed. This circuit is deactivated whenever the reactor period becomes less than 30 seconds, unless the "bypass-reverse" switch is held in the "bypass" position which allows periods of 20 seconds or greater. Reactivation is accomplished by turning the switch to "neutral". The 20-sec period inhibit can be bypassed by depressing the "fast period permit" button; the 10-sec period inhibit cannot be bypassed.

Operate-Start Switch

OPERATOR START WITH SERVO: This channel permits the operator to raise the reactor level from shutdown to N_L with the benefit of the servo. The mode of operation is changed from operator start when the "run" button is pushed, provided run conditions are met.

FULLY MANUAL, OPERATOR START: This channel permits the operator to raise the reactor level from shutdown to N_L without the benefit of the servo. The mode of operation is changed from operator start when the "run" button is pushed, provided run conditions are met.

When the "operate-start" switch is actuated the startup horn sounds and at the termination of the horn sound the circuit with the group rod withdrawal switch becomes energized.

Instrument Start Switch

This switch permits the reactor to be brought from shutdown to N_L completely by instrument supervision. Instrument-start is terminated at N_L by the log-N recorder. When the "instrument-start" switch is actuated, the startup horn sounds, the servo limit switches lower to the withdraw limit switch, and the fission chamber (which should be in "automatic") inserts, if necessary, to give a count rate of at least 20 CPS on the count-rate recorder. The count-rate recorder reading must be $>$20 CPS to go into instrument start.

Fast Period Permit

This switch permits the 20-second period inhibits on the count-rate and log-N recorders to be by-passed when the "by-pass-reverse" switch is in the "by-pass" position. The 10-second period cannot be by-passed.

Annunciator "Reset-Acknowledge" Switches

ACKNOWLEDGE: This permits the alarm on the annunciator panel to be silenced.

RESET: When depressed, this permits the annunciator white section to be cleared after the abnormal condition is cleared.

When an alarm sounds, both the red/yellow and white sections of the offending station will be lighted and the alarm will sound. The "acknowledge" push button must be pressed to acknowledge the signal. When this is done, the alarm will be silenced. When the abnormal condition has ceased to exist, the red or yellow section will darken and the white section will remain lighted. The "reset" push button will darken the white section.

"Run" Switch

The use of this push button provides a physical recognition by the operator that the reactor is entering a mode of operation requiring satisfaction of more stringent conditions. When the log-N recorder reaches N_L, the push button should be pushed if conditions are favorable for going to full power. If "run" mode is not obtained, all rods will be reversed at 1.8 N_L on the log-N recorder. The periods on the log-N and count-rate recorders should be greater than 30 sec before the reactor will go into "run".

2.4b. Center Inclined Panel - Operating Components

Micromicroammeter Range

The micromicroammeter remote range changer control unit should be placed on the 2×10^{-5} scale before startup from N_L to power.

INSERT ERROR: When the "insert error" is actuated by the servo amplifier, the No. 6 rod will insert to maintain a constant power level when operating by servo control.

WITHDRAW ERROR: When the "withdraw error" is actuated by the servo amplifier, the No. 6 rod will withdraw to maintain a constant power level in servo operation.

SERVO-MANUAL SWITCHES: These switches are used to switch from "servo" control to "manual" control and vice versa when the respective buttons are depressed.

Servo Set Point

This switch is used to establish the demand on the servo as indicated on the demand dial in percentage of N_F. The demand switch gives a rough

adjustment. A fine adjustment is obtained by use of the vernier control knob located above the "servo demand" switch.

LOWER: In this position, the servo demand is reduced on an ~20-sec period which uses, if in servo, the No. 6 rod and additional rods, if needed, to lower the power level.

RAISE: In this position a withdraw error is established via the servo amplifier, and the servo control rod (No. 6 rod) withdraws to raise the power level. Should the servo control rod (No. 6 rod) reach the servo withdraw limit before the desired power is attained, this position will cause the preferred rod to withdraw. Under these conditions; i.e., servo set point in raise and the servo control rod (No. 6 rod) at the servo withdraw limit, the withdraw limit annunicator is not activated.

It should be noted that if the reactor is "in servo", and the servo control rod (No. 6 rod) is selected as the preferred rod, the servo limit switches will be withdrawn when the withdraw limit is reached while the servo set point switch is in the "raise" position.

Fission Chamber Switch

AUTOMATIC: This permits the chamber drive assembly to operate automatically when the switch handle is pulled to its out-most position. The switch must be in automatic for an instrument start.

MANUAL: This permits the chamber to be inserted or withdrawn manually when the switch handle is "pushed in" to its in-most position.

INSERT: This permits the chamber to be inserted when the switch handle is in the manual position. Any time the fission chamber is being inserted or withdrawn, the shim rods cannot be withdrawn.

Shim Rod Mode Switches

RAISE: This position permits the shim-rod drive assembly to be raised without the shim rod attached when used in conjunction with the "raise-test" switch in the "raise" position.

OFF: This position permits no current to the shim-rod-drive motor to withdraw the shim rod; however, the rod can be inserted manually or by an automatic reverse.

BLOCK: This position prevents the withdrawal of the shim; however, the rods can be inserted manually or by an automatic reverse. It also permits automatic "drive-down" of the drive assembly following a scram.

NORMAL: This permits the withdrawal of the shim rod by either the "group rod withdrawal" or "instrument start" switch. When using the mode withdrawal push button, only one shim rod can be withdrawn at a time. The timer is not effective on the individual mode withdrawal push button system.

PREFERRED: This position is the same as "normal" with the exception that it permits the servo preferred limit switch to insert the shim rod. If more than one rod is in "preferred", the lowest numbered rod will be inserted. If the No. 1, 2, 3, 4, and 5 shim rods are in a position other than "preferred" and the No. 6 is in "preferred", the servo limit switches will be inserted to the middle limit switch.

When in servo, the No. 6 mode "withdraw" and "insert" push button moves the limit switches up or down when the respective push button is actuated. The insertion of the limit switches is stopped when the withdraw limit switch is actuated. The withdrawal of the limit switches is stopped by the actuation of the "preferred" limit switch.

When not in servo, the No. 6 shim rod mode "insert" and "withdraw" push buttons move the No. 6 shim rod up or down when the respective push button is actuated.

Servo Limit Indicator

This unit consists of a dial indicator and four signal lights all of which serve to show the position of the servo control rod in relation to its working limits. The four lights, labeled withdraw, middle, preferred, and reverse, are located in the corners of the unit with the dial indicator in the center.

The pointer moves around the dial in a clockwise direction as the servo control rod is withdrawn or as the servo limits are adjusted downward. The extreme clockwise position should concur with the servo withdraw limit, and the indicator light for this limit should be lighted at this point. The servo withdraw annunciator also should sound if the servo demand is not in the raise position. In normal operation this annunciator brings the operator's attention to the need for upward adjustment of the servo limit switches or, possibly, upward adjustment of shim rods No. 3, 4, and 5. (No. 1 and 2 are kept on upper limit.)

A counter-clockwise movement of the pointer indicates either an insertion of the servo control rod or an upward adjustment of the servo limits. When the pointer moves counter-clockwise from the withdraw limit position, the withdraw limit is de-energized and the middle limit is actuated. The middle light indicates a desirable rod position and will remain lighted throughout the upper half of the control range.

Should the servo control rod be inserted below the half-way point, the middle limit will be deactivated. At approximately three-quarters

of the limit switch span, the preferred insert limit is actuated; and the lowest numbered "preferred" rod will insert as long as the servo control rod is below the middle limit. If, however, the servo control rod continues to insert, the "insert 5-rods" limit will be actuated. At this point the No. 1, 2, 3, 4, and 5 rods will insert regardless of the position of their mode switches. A "5-rod insert" continues only as long as this limit is actuated.

2.5. ORR Instrument Check-Out Procedures

2.5a. General

The check-out procedures which follow were designed to provide a test of the alarm and safety circuits and their associated instrumentation. Proper function of the safety circuits is dependent upon the performance of the shim rods, the shim-rod drives, and the shim-rod release mechanism; therefore, a test of these components is included below. It is required that all components be checked prior to the beginning of each operating cycle and that any components affected by maintenance procedures or other changes be checked as soon as is practical after completion of such work.

It is the responsibility of the ORR reactor supervisor to determine that the checks are properly made. He is assisted in this responsibility by other members of ORR supervision and by personnel from the Instrumentation and Controls Division.

2.5b. Shim-Rod Drives and Release Mechanisms; Mechanical Function and and Limit Switches

Introduction

The necessity for proper operation of the mechanical and electrical portions of the shim-rod drives and the release mechanisms cannot be overemphasized. As stated above, the safety circuits cannot be effective unless these components are functioning properly. The tests outlined below must be performed carefully by qualified personnel, and each unit tested must meet the specifications outlined in the procedure.

Reactor Conditions for Tests

The reactor lattice must be prepared for normal operation and the primary reactor water flow rate must be approximately equal to the normal

rate at full reactor power (nominally 18,000 gpm).

Personnel Required for Tests

During the tests, it is required that an Operations' engineer be present in the subpile room; and, if possible, he should be accompanied by an I & C engineer. The control room console is to be manned by a qualified member of the Operations' group. Mechanical and/or electrical maintenance personnel may be required for adjustments or repairs.

Procedure

1. Check the individual units in accordance with the check sheet, a copy of which is included as Example 2.1. A step-by-step procedure is provided on the check sheet with blank spaces provided for data and initialing.
2. Initiate any corrective actions for repairs as necessary.
3. Record any pertinent information in the Operations' log book.
4. Place the initialed and properly completed check sheet in the file maintained by the ORR operations staff.

2.5c. Safety System, Release Mechanism, and Shim Rod Performance Checks

(Includes Calibration of the Instrumentation)

Introduction

Part 2.5b., above, provides a procedure for checking the mechanical functions of the release mechanism. The next step is to check the electrical and electronic functions of the safety system (fast scram) and the release mechanism and to determine that the shim rods are working properly. This requires that operating magnet currents be approximated and that the magnet amplifiers be properly adjusted. These objectives are accomplished by simulating operating conditions as described later.

ORR SHIM - ROD - DRIVE

SAFETY SWITCH CHECKS

OPERATIONS ENGINEER_____ DATE_____

I & C ENGINEER_____

I. The following checks are to be performed bi-monthly (or following shim rod drive maintenance work in the sub-pile room). Sections II and III are to be completed by checking each rod in sequence before proceeding to the following section. The Control Room actions must be performed by or supervised by a qualified shift engineer or day shift engineer. The sub-pile room actions should be supervised by an I & C Engineer. (These tests should be performed with reactor coolant flow of approximately 18,000 gpm. Where recording of a distance is required, initialing is not required.)

II. Checks with shim rods uncoupled from shim rod drives

	No. 1	No. 2	No. 3	No. 4	No. 5	No. 6
A. Conditions: Key Switch in OFF. Scram switch in SCRAM. Switch in RAISE.	____	____	____	____	____	____
B. Place shim rod (S.R.) mode switch in RAISE position. With S.R. Drive withdrawing manually actuate ULS. Observe that S.R. Drive stops and UL Light comes on.	____	____	____	____	____	____
C. PLACE S.R. mode switch in NORMAL position. With S.R. Drive inserting manually actuate the L.L.S. Observe that S.R. Drive stops and LL Light comes on.	____	____	____	____	____	____

Example 2.1.

	No. 1	No. 2	No. 3	No. 4	No. 5	No. 6
D. Allow the S.R. Drive to insert until very near the point at which the clutch switch actuates.						
1. Unplug the drive motor and manually insert S.R. Drive <u>slowly</u> until clutch switch actuates. (Actuation may be determined audibly or by clutch light in the control room.)	____	____	____	____	____	____
2. Record the distance between the S.R. Drive magnet and magnet keeper. (Distance should be approximately 0.020 in. A gap must exist.	____	____	____	____	____	____
3. Record selsyn position indication (selsyn need not be zeroed.)	____	____	____	____	____	____
4. Manually lower Drive until LLS is actuated.	____	____	____	____	____	____
5. Record the selsyn-position indication.	____	____	____	____	____	____
6. Record the difference between reading obtained in step II. D.3 and in step II. D.5. (Difference should be between 0.1875" and 0.250").	____	____	____	____	____	____

Example 2.1. (Continued)

	No. 1	No. 2	No. 3	No. 4	No. 5	No. 6
7. Check the recocking spring to insure it is not fully compressed.	____	____	____	____	____	____
E. Place S.R. Mode Switch in RAISE position. Plug in the drive motor and allow the S.R. Drive to withdraw until above the point at which the Clutch switch is actuated.	____	____	____	____	____	____
F. Place S.R. Mode Switch in NORMAL position. Allow S.R. Drive to continue inserting until Clutch Switch actuates.						
1. Observe that S.R. Drive stops and CLUTCH Light goes off.	____	____	____	____	____	____
2. Record the Selsyn position-indication.	____	____	____	____	____	____
3. Record the difference between the readings obtained in Step II. D.3 and in Step II. F.3.	____	____	____	____	____	____
G. Place S.R. Mode Switch in RAISE position. Allow S.R. Drive to withdraw until Clutch Light comes on. Place S.R. Mode Switch in OFF position to stop withdrawal. Disconnect Clutch Switch.	____	____	____	____	____	____

Example 2.1. (Continued)

WIRE AND WIRE LOCATION FOR DISCONNECTION
S.R. DRIVE CLUTCH SWITCHES IN SUB-PILE ROOM

S.R. Drive No.	1	2	3	4	5	6
Wire	204	209	214	247	253	219
Terminal Strip No.	TS-23	TS-27	TS-31	TS-38	TS-42	TS-34

	No. 1	No. 2	No. 3	No. 4	No. 5	No. 6
H. Place S.R. Mode Switch in BLOCK position. Allow S.R. Drive to insert until L.L.S. stops the insertion. (Sub-pile room personnel should be prepared to disconnect S.R. Drive Motor if necessary to prevent damage.)						
1. Record the approximate distance the legs of the recocking tripod extend below the housing.	____	____	____	____	____	____
2. Record the Selsyn Position-Indication.	____	____	____	____	____	____
3. Record the difference between the readings obtained in Step II. D.5 and in Step II. H.2.	____	____	____	____	____	____
4. Check the recocking spring to insure that it is not fully compressed.	____	____	____	____	____	____

Example 2.1. (Continued)

	No. 1	No. 2	No. 3	No. 4	No. 5	No. 6
I. Reinstall the wire removed in II. G. Place S.R. Mode Switch in RAISE position. Allow S.R. Drive to withdraw until Clutch Light comes on.	____	____	____	____	____	____
J. Place S.R. Mode Switch in BLOCK position. Allow S.R. Drive to insert until Clutch Switch stops insertion.	____	____	____	____	____	____
III. Check with Shim Rods Coupled to Shim Rod Drive						
A. Conditions: Obtain operator Start. Raise-Test in TEST. All scrams cleared. Check to see no gap exists on any S.R. Drive.	____	____	____	____	____	____
B. Withdraw S.R. about 2 in. Insert S.R. until seat Switch stops insertion. Observe that insertion is prohibited and Seat Light comes on.	____	____	____	____	____	____
C. Withdraw S.R. slowly until the end of the Seat Switch bellows-seal begins to move down.	____	____	____	____	____	____
1. Zero Fine Selsyn.	____	____	____	____	____	____
2. Zero Course Selsyn.	____	____	____	____	____	____
3. Zero Yardsticks (if possible) and record indication.	____	____	____	____	____	____

Example 2.1. (Continued)

	No. 1	No. 2	No. 3	No. 4	No. 5	No. 6
IV. Checks for Mechanical Tightness						
A. U.L.S.	____	____	____	____	____	____
B. L.L.S.	____	____	____	____	____	____
C. SEAT SWITCH	____	____	____	____	____	____
D. Magnet Housing-Top Section	____	____	____	____	____	____
V. Upper Limit Switch Checks						
A. Place Raise-Test Switch in RAISE. Place all S.R. Mode Switches in RAISE (an observer must be in the Sub-Pile Room). Allow S.R. Drive withdrawal to be terminated by U.L.S.	____	____	____	____	____	____
B. Record the S.R. Drive position at U.L.S.						
1. Selsyn	____	____	____	____	____	____
2. Yardstick	____	____	____	____	____	____
3. Measured distance from bottom of "Bottom Plug" to top of "Magnet-Cord Housing".	____	____	____	____	____	____
	$10\frac{1}{8}$"	$10\frac{1}{4}$"	$10\frac{1}{8}$"	$10\frac{1}{4}$"	$10\frac{1}{8}$"	$10\frac{1}{4}$"

Example 2.1. (Continued)

The tests of the shim rod performance are accomplished by actually operating the shim rods while making the required measurements. The following definitions are presented to avoid confusion.

1. Drop current is defined as that current which is passing through the magnet coil when a minimum separation of the magnet and magnet armature is effected to produce scram action of the scram latch mechanism. This value is determined by slowly reducing the magnet current from the approximate normal operating value. The shim rods are to be raised to the 3-inches-withdrawn position for this determination.
2. N_L current (simulated) is defined as the output current of the magnet amplifier (magnet current) when the sigma bus voltage is 37 volts provided the magnet amplifier output current (magnet current) has been adjusted to equal the drop current with the sigma bus at 44 volts.
3. N_F current (simulated) is defined as the output current of the magnet amplifier (magnet current) when the sigma bus voltage is 39 volts provided the magnet amplifier output current (magnet current) has been adjusted to equal the drop current with the sigma bus voltage at 44 volts.
4. Release time is defined as the elapsed time from pulse actuation until the magnet keeper separates from the magnet a distance sufficiently great to prevent recapture of the keeper when current is restored. The release time of each magnet shall be determined prior to the beginning of an operating cycle and immediately following any repair work on or replacement of the magnet and/or

release assembly. This time is determined by pulsing the magnet current from N_L current to 0 current while slowly increasing the duration of the pulse.

5. Time of flight is defined as that interval of time between the loss of magnet current and the actuation of the rod seat switch by the shim rod being tested. The time-of-flight measurement is normally made with the shim rod withdrawn to the upper limit of its travel.

6. An operating cycle is defined as that period of time (usually 8 weeks) comprised of: (a) several weeks (usually 7) during which the reactor is operated as continuously as possible followed by (b) an extended scheduled shutdown of approximately one week's duration for experiment and reactor maintenance and changes.

Limits of Acceptability and/or Rejection

The parameters defined above are expected to vary somewhat due to slight differences in the various components. Certain limits, however, must not be exceeded. These limits are listed below.

1. Drop Current
   - a) Acceptable: 20 ± 5 milliamperes
   - b) Reject: <12 or >35 milliamperes
2. Release Time
   - a) Acceptable 12 ± 2 milliseconds
   - b) Reject: <5 or >25 milliseconds
3. Time of Flight
   - a) Acceptable: ≤ 350 milliseconds
   - b) Reject: >500 milliseconds

Reactor Conditions for Tests

Same as conditions for 2.5b.

Personnel Required for Tests

It is required that a qualified Operations' engineer and an I & C engineer or foreman be present during the tests. Other personnel are required only as needed.

Procedure

1. Check the various components in accordance with the latest revision of the "Procedures for Routine Safety System Adjustments and Checks at the ORR", a copy of which is included as 2.5d.
2. Initiate any corrective action or repairs as necessary.
3. Record pertinent information in the Operations' log book.
4. Record the data from the tests on the instrument check sheet, Example 2.2, and on the magnet-data card which is posted near the magnet amplifiers.
5. Place the properly initialed and completed check sheet in the file maintained by the Reactor Operations Department.
6. Post the magnet-data card.

2.5d. Procedures for Routine Safety System Adjustments and Tests at the ORR

Instrument Calibration

1. Calibrate period sigma amplifier
   a. Disconnect the input to the period sigma amplifier, exercising care that the output of the period amplifier is not allowed to become grounded during the following tests. Connect a volt

ORR Shim-Rod and Shim-Rod-Drive

Performance Checkout

I. Performance checkout immediately after shutdown (end-of-cycle) with full cooling water flow:

A. Following reactor power reduction to N_L, record the magnet currents for all shim rods.

B. Reverse all rods to 3 in. withdrawn and check the drop currents.

C. Raise all rods to 3 in. withdrawn and check the magnet release time (with shim-rod mode switches in OFF position).

D. Make a detailed inspection of the magnet (magnet keeper area) for water, rust or sediment, and foreign material.

E. Observe recocking of each shim-rod drive in turn (by individually turning shim-rod mode switches to BLOCK position with scram switch in SCRAM position). There should be no gap between magnet and magnet keeper greater than 0.020 in.

F. Restore magnet current and inspect for any minute air gap.

G. Investigate and report any abnormalities.

Operations Engineer_____ Date_____

I & C Engineer_____ Shift_____

		1	2	3	4	5	6
Magnet current at N_L (ma)	A						
	B						
	Total						
Drop current (ma)	A						
	B						
	Total						
Magnet Release Time (ms)							
Results of Steps I.D. through I.G.							

II. Preliminary checkout of shim rods and shim-rod drives without cooling water flow

(The following checks are to be completed if the working schedule for the end-of-cycle shutdown dictates that a reactor critical run should be made before those checks required prior to power operation, see section III. Those items marked with an asterisk must be completed even if such "preliminary checkout" is not required.

*A. Check to determine that each rod is locked by its drive unit cross (at this time, the proper orientation of the recocking tripod should be determined and/or set).

*B. Check the resistance of all shim-rod magnets <u>from the control room</u> using a "megger" at 1000 v (an investigation should be made if the resistance between the magnet and ground is less than 100 megohms). Reconnect all magnet circuits.

C. Establish conditions of the control system for "operator start". Clear all scrams.

D. Raise all rods to 3 in. withdrawn and check the magnet drop currents.

E. Investigate and report any abnormalities.

Operations Engineer_____ Date_____

I & C Engineer_____ Shift_____

	1	2	3	4	5	6
All rods locked and proper orientation of recocking tripod set (initial only)						
Resistance between magnet and ground (megohms)						
Drop current (ma) A						
B						
Total						

III. Checkout of shim rods and shim-rod drives with full cooling water flow.

A. Establish conditions of the control system for "operator start".

B. Determine the magnet drop currents with all rods withdrawn 3 in.

C. Determine the magnet drop points with all rods withdrawn 3 in. (following withdrawal, shim-rod motion should be inhibited by throwing breakers as shown in the following table.)

D. Determine the N_L currents.

E. Determine the simulated N_F currents.

F. Determine the time-of-flight for the shim rods (one shim rod at a time with the shim rod withdrawn to the upper limit switch).

Operations Engineer_____ Date_____

I & C. Engineer_____ Shift_____

			1	2	3	4	5	6
Shim-rod release time (ms) with rods withdrawn 3 in. (1)								
Shim-rod time of flight (ms) with individual rod at ULS. (1)								
Safety-level-drop point with rods withdrawn 3 in. (2)	No.___							
	No.___							
	No.___							
	No.___							
	No.___							
	No.___							
Magnet-amplifier currents (ma)	Drop current	A						
		B						
		Total						
		A						
		B						
		Total						
	N_L current	A						
		B						
		Total						
	Simulated N_F current	A						
		B						
		Total						
	Operating N_F current (3)	A						
		B						
		Total						

Example 2.2 (Continued)

(1) With normal cooling water flow (three primary cooling water pumps operating with primary by-pass valve set at 40% open).

(2) To inhibit reverse during this test throw the respective breakers:

Shim Rod	1	2	3	4	5	6
Breaker	L4	L6	L8	L14	L16	L10

(3) One hour after reaching 30mw and following safety-level chamber positioning (safety-level-channel-recorder indication: No. 1____; No. 2____; No. 3____).

box to the input of the period sigma amplifier and connect a reliable voltmeter for observing the input voltage.

b. Set the amplifier monitor switch to the "power" position for the following tests.

c. Set the input voltage at 22 v and adjust the low-calibrate potentiometer so that the meter reads zero.

d. Set the input voltage at 32 v and adjust the high-calibrate potentiometer so that the panel meter reads 1.00.

e. Repeat steps 1-c and 1-d in succession until no further adjustments are necessary.

f. Set the input voltage at 37 v. The panel meter should read 1.5 ±2%. If the reading does not fall in the range, the trouble should be located and eliminated before proceeding.

g. Set the input voltage at 35.5 v. Adjust the scram-adjust potentiometer so that the scram level catcher just trips at this value.

2. Check the period sigma amplifier output

(Note: Since period sigma amplifier output would be loaded by the other sigmas when connected to the bus, it is necessary to disconnect the output from the sigma bus to get reliable performance measurements).

a. Disconnect the output of the period sigma amplifier from the sigma bus. Connect a reliable voltmeter for observing the output voltage.

b. With the input to the period sigma amplifier at 22 v, the output should be 38 ± 1 v.

c. With the input at 32 v, the output should be 39 ±1 v.

d. With the input at 37 v, the output should be 43.5 ±1 v.

3. Calibration of log-N amplifiers (Complete step a-g below for each amplifier.)

   a. Turn the selector switch of the log-N amplifier to the "ground" position.

   b. Adjust the "ground" adjust pot until the log-N recorder reads .0001.

   c. Place the selector switch of the log-N amplifier to the "low calibrate" position.

   d. Adjust the "calibrate" adjust pot until the log-N recorder reads .00022.

   e. Turn the selector switch of the log-N amplifier to the "high-calibrate" position.

   f. Adjust the "gain-adjust" pot until the log-N recorder reads 22.

   g. Repeat the calibration between "low" and "high" and "ground set" calibrate until the span is correct.

4. Test period channel

   a. Place the log-N on "ground set".

   b. Disconnect the input to the log-N amplifier.

   c. Connect the period simulator to the input of log-N amplifier.

   d. Place the log-N selector switch in the "operate" position.

   e. Turn the period simulator on and calibrate it by:

      1) turning the period-calibrate switch of the simulator to the "calibrate" position and

2) turning the period "adj" screw to bring the period meter pointer to the black "calibrate" line (~.012) on the meter scale.

f. Turn the period-calibrate switch of the simulator to the 30-sec position and observe that the period meter on the log-N amplifier and the log-N period recorder indicate a 30-sec period ± 5 sec.

g. Switch the period-calibrate switch of the simulator to the 7-sec period and observe that the meter and recorder both read a 7-sec period ± 1/2 sec.

h. Repeat for 5-sec and 3-sec periods with a ±1/2-sec tolerance.

i. Connect a reliable voltmeter to the output of the period sigma amplifier. (output disconnected from the sigma bus)

j. Turn the period-calibrate switch of the simulator to the 1-sec position. The voltmeter on the period sigma amplifier output should read 44 ± 2 v at this simulator setting.

k. Place the log-N on "ground set" and disconnect the simulator. Disconnect the voltmeter from the period sigma amplifier output.

l. Reconnect the input to the log-N amplifier and reconnect the period sigma amplifier output to the sigma bus.

5. Calibration of safety recorders (Repeat steps a-g below for each recorder.)

a. For the recorder to be calibrated, remove the recorder cable and connector from the rear of the safety sigma amplifier. Using the cable and plug made for this calibration, connect a reliable millivolt potentiometer to the recorder cable.

b. Standardize the millivolt pot and supply zero millivolts to the recorder. The recorder should zero.

c. Supply 3.33 millivolt to the recorder. The recorder should read 50 divisions on the scale.

d. Supply 6.66 millivolt to the recorder. The recorder should read 100 divisions on the scale.

e. Supply 10 millivolt to the recorder. The recorder should read 150 divisions on the scale.

f. If the calibration of the recorder is in error, adjust the slidewire position to correct for zero and the voltage adjustment on the Zener supply to give the proper span. The L & N manual on Zener power supplies gives detailed information on additional troubles, if needed.

g. Reconnect the recorder cable and connector to the safety sigma amplifier.

6. Calibrate the level sigma amplifiers

(Note: All rods must be in "seat" and mode switch in "off" throughout parts 6 and 7.)

a. Disconnect the input to all three level sigma amplifiers, exercising care that the output of the preamp is not allowed to become grounded during the following tests. Connect a volt box to the inputs of all level sigma amplifiers simultaneously and connect a reliable voltmeter for observing the input voltages.

b. Adjust the input voltage to 22 v and adjust the "low-calibrate" pots on each level sigma amplifier so that the corresponding

safety recorder reads zero. (Caution: Do not set below zero.)

c. Adjust the input voltage to 32 v and adjust the "high-calibrate" pots on each level sigma amplifier so that the corresponding safety recorder reads 100.

d. Repeat steps 6-b and 6-c in succession until no further adjustments are necessary.

e. Adjust the input voltage to 37 v. Safety recorders should read 150 +0-02. If any of the readings do not fall in this range, the trouble should be located and eliminated before proceeding.

f. Adjust the input voltage to 35.5 v. Adjust "scram-adjust" pot so that the scram-level catcher trips at this value.

7. Check the sigma bus voltage

a. With the input signal to the three level sigma amplifiers adjusted to 22 v, the sigma-bus voltage should be 38 ±1 v.

b. With the input signal to the three level sigma amplifiers adjusted to 32 v, the sigma-bus should be 39 ±1 v.

c. With the input signal to the three level sigma amplifiers adjusted to 37 v, the sigma-bus voltage should be 43.5 ±1 v.

If the sigma bus reading is out of the range shown above for any of the input voltages, the trouble should be located and eliminated before proceeding.

d. Disconnect the volt box and reconnect the input to all three level sigma amplifiers.

Rod Checks with Full Water Flow

1. Set the magnet currents and perform rod release test with 18,000 gpm reactor water flow. Place the "raise test" switch in "normal".

   a. Turn the bus protect pot on each magnet amplifier fully clockwise.

   b. Disconnect the input to two level sigma amplifiers, exercising care that the output of the preamp is not allowed to become grounded during the following tests. Connect a volt box to the inputs of two of the level sigma amplifiers simultaneously and connect a reliable voltmeter for observing the input voltages. Adjust the volt box to 22 v at the input to two of the safety sigma amplifiers. Each cycle, the testing should be alternated between the three sigma amplifiers.

   c. Check all currents. Adjust as needed to obtain >55 milliamperes. Raise all rods 1 in. and scram. Raise all rods ~3 in.

   d. Determining the magnet drop current.

      1) Slowly reduce the magnet current by turning the magnet current "adjust pots" on the magnet amplifiers until the rod drops. This should be done by small increment changes on magnet amplifiers A and B; alternating from A to B until the rod drops as indicated by the clutch light.

      2) After the drive units have "run down" and recocked (i.e., magnet and magnet keeper are in contact), the magnet currents should be read and recorded.

3) Any abnormalities should be investigated.

4) The entry on the instrument check sheet should be initialed by the I & C foreman or engineer and Operations Supervision.

5) These drop currents will then be posted on the card located on amplifier cabinet "B".

e. Set the volt box to 36.5 v on the input to two safety sigma amplifiers. The two safety recorders should read 145 ± 2 divisions.

f. Leaving the volt box at 36.5 v with the conditions as 1-e above, adjust the potentiometers on the magnet amplifiers so that the sum of the magnet currents obtained in step 1-d are equally divided on amplifiers A and B. These adjustments must be visually observed and verified by Operations Supervision.

g. Adjust the volt box to 22 v and slowly turn the bus protect pot on each magnet amplifier counterclockwise until the magnet current drops ~1 ma.

h. Raise all rods ~3 in.

i. Inhibit the motion on the shim-rod-drive motors by throwing breakers L-4, L-6, L-8, L-10, L-14, and L-16.

j. Slowly increase, by using the volt box, the voltage input to the same two level sigma amplifiers as set in 1-b above until the rods drop as indicated by the clutch light. Note the reading of the safety recorders at which each rod drop occurs. (All rods may not drop at the same time). Rod

drops with the safety recorders reading (145 ±5) are acceptable. Record this information in the log book and on the instrument check sheet.

k. Reinstate the breakers L-4, L-6, L-8, L-10, L-14, and L-16.

l. CAUTION: All Rods Must Be In Seat and Mode Switch in "Off". Adjust the volt box to 22 v as supplied to the input to the three safety sigma amplifiers. This simulates an operating level of N_L. Read the magnet currents (sum A and B) and record these simulated N_L currents in the ORR log book and on the instrument check sheet. Entries on the instrument check sheet should be initialed by an I & C foreman or engineer and Operations Supervision. These simulated N_L current values should be posted on the card which is located on amplifier cabinet B.

m. Adjust the volt box to 32 v as supplied to the input to the three safety sigma amplifiers. This simulates an operating level of N_F. Read the magnet currents (sum A and B) and record these simulated N_F currents in the ORR log book and on the instrument check sheet. Entries on the instrument check sheet should be initialed by and I & C foreman or engineer and Operations Supervision. Record the three safety recorder readings with the simulated N_F conditions.

n. Replace the volt box at the input of two level sigma amplifiers with the pulser and reconnect the preamp to the third level sigma amplifier.

o. Turn the "pulse-width" pot to 10 M.S. and, with the oscillator on, set the repetition rate to give pulses at about

1-sec intervals.

p. Set the d-c level of pulser at 22 v. Push pulser button and adjust the pulse height to reduce all currents to ~zero ma.

q. Set the pulse-width multiplier to "X10".

r. Raise all rods 3 in. (Caution: This can be done only under the supervision of a reactor operator foreman or supervisor).

s. Slowly turn the pulse-width pot in half-millisecond steps until the first rod drops. Record the pulse width. Continue increasing the pulse width, and record the value at which each rod drops. Report these values to Operations for entry in the reactor log book.

t. Time of flight

1) With the d-c. pulser connected to two of the sigma safety amplifiers and with the oscillator section off, set the d-c. level at 22 v.

2) Using a "tee" at the output of the pulser, feed the signal to the safety amplifiers and to the trigger input of the oscilloscope.

3) On the rod to be checked, connect the hot side of the seat switch relay to the vertical input of the scope. (Caution: This wire has 110 v a-c. when the rod is in seat.) Use the "X10" attenuator probe between the relays and scope.

4)

Rod No.	Relay No.	Cabinet No.	Wire No.
1	36	A	203
2	40	A	208
3	44	A	213
4	36X	X	245
5	40X	X	251
6	48	A	218

5) Set the oscilloscope in the following manner:

Time Base Section	Vertical Section
Trigger mode - AC Trigger Slope - Ext.+ Time/cm - 50 ms Variable - Calibrated	Volts/cm - 20 with "X10" Attu. probe input - AC

Adjust the trigger stability and trigger level so that a sweep is observed on the screen of the scope each time the pulser button is pushed. (CAUTION: Be sure the trigger occurs on the in stroke of the switch.)

6) Raise the rod to be checked to the upper limit switch. (Caution: This can be done only under the supervision of a reactor operator foreman or supervisor.)

7) Push and hold the button on the pulser and observe the display on the oscilloscope. This is the time required for the rod to fall. This should be observed by an Operations foreman or supervisor and an instrument engineer or foreman so that collaboration of the reading can be made. Record this reading in the Operations log book and on the form provided.

8) Repeat steps (3) through (7) for all rods to be checked.

u. Disconnect the pulser from the inputs of the two level sigma amplifiers and reconnect the preamps.

v. Adjust the preamp grid-offset pot on each level sigma amplifier so that the corresponding recorder reads zero. (Caution: Do not set below zero.)

2. Check to see that all cables are connected in their operating condition, and that all volt boxes, period simulators, and auxiliary meters are removed. Both Operations and I & C personnel shall verify this.

   a. Raise all rods to clear seats, but not over 1 in. (Caution: This can be done only under the supervision of a reactor operator foreman or supervisor.)

   b. Push Jordan button on No. 1 level sigma amplifier. All rods should drop. Report abnormalities.

   c. Repeat steps 2-a and 2-b using No. 2 and 3 level sigma amplifiers to drop the rods.

   d. Set log-N on "low calibrate". Raise all rods to clear seats, but not over 1 in. (See caution in step 2-a.) Rotate calibrate switch to "high-calibrate" position. All rods should drop. Return calibrate switch to "operate" position. Report abrormalities.

3. Thirty minutes after the reactor reaches full power and all safety recorders are reading between 95-100, note magnet current on each magnet and record in reactor log.

<u>Preliminary Rod Check Without Water Flow</u>

1. Operations personnel will perform checks to determine that each rod is locked by its drive unit cross. At this time, the proper orientation of the recocking tripod should be determined and/or set.

2. Check the resistance of all shim rod magnets, from the control room, using a "Megger" at 1000 v. Investigate if resistance (magnet to ground) is less than 100 megohms. Reconnect all magnet circuits.
3. Re-establish conditions of the control system for "Operator Start". Clear all scrams.
4. Withdraw all rods 3 in.
   a. Slowly reduce the magnet current by turning the magnet current adjust pots on the magnet amplifiers until the rod drops. This should be done by small increment changes on magnet amplifiers A and B alternating from A to B until the rod drops as indicated by clutch light. Repeat this procedure for each rod.
   b. After the drive units have "run down" and recocked (i.e., magnet and magnet keeper are in contact), the magnet currents should be read and recorded.
   c. Any abnormalities should be investigated.
5. Perform shim-rod-safety switch check-out procedure (using standard form TX-3118).

Rod Drop Checks Immediately After Shutdown

After the reactor power has been reduced to N_L, instrument checks on the shim-rod drives and related electronics will be made as follows:

1. With the reactor power at N_L, record all magnet currents.
2. After the shim rods have been reversed to 3 in., check the drop currents as follows:
   a. Slowly reduce the magnet current by turning the magnet amplifiers until the rod drops. This should be done by

small increment changes on magnet amplifier A and B alternating from A to B until the rod drops as indicated by clutch light. Repeat this procedure for each rod.

b. After the drive units have "run down" and recocked (i.e., magnet and magnet keeper are in contact), the magnet currents should be read and recorded. Report abnormalities.

3. Connect the pulser to the input of two level sigma amplifiers.
4. With the oscillator on, turn the pulse-width pot to zero and set the repetition rate to give pulses at about 1-sec intervals.
5. Adjust the d-c. level of pulser at 22 v. Push pulser button and adjust the pulse height to reduce all currents to ~zero ma.
6. Set pulse width multiplier to "X10".
7. Restore the magnet currents (balanced on A and B) to the posted N_L values. (CAUTION: Rods should not be in motion).
8. Raise all rods 3 in. (Caution: This can be done only under the supervision of a reactor supervisor or foreman.) Place all rod mode switches in "OFF" position.
9. Slowly turn pulse width pot in half-millisecond steps until the first rod drops as indicated by clutch light. Record pulse width. Continue increasing the pulse width and record the value at which each rod drops. Report these values to Operations for entry in the reactor log book.
10. Disconnect the pulser from the inputs of the level sigma amplifiers and reconnect the preamp to the sigma amplifiers.
11. Make a detailed inspection of the magnet--magnet keeper area, specifically looking for water, rust or sediments, and any foreign

material which may be present. This information should be recorded.

12. With the reactor in "scram" condition and upon directions from the inspector in the subpile room, place a single rod mode switch in the "Block" position. The inspector will observe the recocking operation and note the air gap between the magnet and magnet keeper after the clutch switch has made up and "coast-down" has terminated. This gap should be less than .020 in. Repeat for each rod.

13. Restore the magnet currents. Make close inspection for any minute air gap.

2.5e. Alarm, Setback, Reverse and Slow Scram - Circuit and Instrumentation Checks

Introduction

A series of instrument checks have been devised which provide a means for thoroughly checking the above listed circuits for proper operation. Operating conditions must be simulated for many of the checks since the circuits cannot be checked while the reactor is operating. Simulation of operating conditions requires the lifting of wires in some control circuits and the installation of jumpers in other circuits. It is necessary that this phase of the checks be very closely supervised and that the Operations' supervisor in charge be assured that all circuits affected are returned to their normal status.

Reactor Conditions for Tests

It is necessary that the reactor and pool primary water systems be prepared for normal flow conditions for part of these tests.

Personnel Required for Tests

1. A qualified Operations' engineer
2. An I & C engineer or foreman
3. An instrument technician
4. Other personnel as necessary to complete the tests

Procedure

The procedure to be followed is presented in Example 2.3, Pre-Startup ORR Instrument Checks. A copy of this check sheet is provided for each testing period, and the completed forms are placed in a permanent file which is maintained by the Reactor Operations Department.

PRE-STARTUP ORR INSTRUMENT CHECKS

Date_____ Instrument Foreman_____

Operations Supervisor_____ Instrument Technician_____

I. Checks with Simulated Flow — Remarks

A. Conditions: Mode switches in OFF, operator start, power buses (switches) on, clutches made up, breaker L-10 in control room in OFF, and raise-test switch in NORMAL. _____

	Simulated	Restored
1. To simulate pool cooling flow in RUN circuit:		
Jumper 125 to 125A in JB-PX No. 1	_____	_____
2. To simulate reactor ΔP (>15.3 psig) in scram circuits:		
Jumper 339A to 340 in JB-PX No. 1	_____	_____
Remove wire 358 in JB-PX No. 1	_____	_____
3. To simulate reactor cooling flow (>14,000 gpm) in scram circuits:		
Jumper 339 to 339A (on CP-18) in TB-A	_____	_____
Remove wire 359 (on CP-18) in TB-A	_____	_____
4. To simulate reactor cooling flow (>17,000 gpm) and ΔP (>21.4 psig) in setback circuit:		
Jumper 422 to L1 at R79 in Relay Cab. "X"	_____	_____
Jumper 421 to L1 at R78 in Relay Cab. "X"	_____	_____
5. To simulate north and south facility flow in setback and auxiliary reverse circuits:		
Remove wire 407 (on FF-1) in TB-A	_____	_____
Jumper 420 to 420K (on FF-1) in TB-A	_____	_____
6. Clear all scrams and reset all cleared annunciators:		

Example 2.3.

B. Log N Recorders	Log N #1	(Log N #2)
1. Switch channel selector switch to channel being checked. Turn log N amplifier switch to OPERATE. Turn recorder off and crank recorder indicator left.	_____	_____
2. RS4 (RS57). Crank recorder right. R65 energizes as recorder is cranked to right through 0.001. Leave energized.	_____	_____
3. RS34. Turn log N amplifier switch off of OPERATE. R65[1] should be de-energized. Return switch to OPERATE. R65 should be re-energized. Turn channel selector switch to other channel. R65 should be de-energized. Return switch to channel being checked and R65 should be re-energized.	_____	_____
4. RS6 (RS59). Pull breaker on "pool cooling pump" in basement. Hold RUN button. RUN should be obtained as recorder is cranked right through 0.6 N_L.	_____	_____
5. RS5 (RS58). Reactor should drop out of RUN as recorder is cranked left through 0.33 N_L. Leave out of RUN.	_____	_____
6. RS7 (RS60). As recorder is cranked right through 1.8 N_L a REVERSE[2] should occur. Return log N to ground set. Turn on recorder (leave last recorder tested OFF throughout the test).	_____	_____

[1] R65 is located in cabinet "A"-rear; column 2, row 3.

[2] REVERSE should be indicated by an indicator light above the REVERSE-BYPASS switch.

Example 2.3. (Continued)

C. Delta T

	ΔT #1	(ΔT #2)
Conditions: Obtain RUN. Obtain SERVO using console button. Set log N period recorder on infinity and set log N recorder $> 1.8\ N_L$.	____	____
1. RS18 (RS47). Crank recorder to the right. An alarm should occur at 13°F.	____	____
2. RS19 (RS48): Setback RS28 (RS51): Auxiliary Reverse Raise servo demand. As recorder is cranked right through 13.5°F the servo demand should start down. After ~5 sec a REVERSE should occur and reactor should go into MANUAL.	____	____
3. RS20 (RS49): Drop-Out Scram R28 RS20X (RS50): Make-Up Scram R28X Insure that all slow scrams are cleared. As recorder is cranked right through 15.5°F both SLOW SCRAM lights on console should turn on. (Observe when testing ΔT #1 that magnet amplifier current has been reduced to zero m. amps.)	____	____

D. Outlet Temperature

1. RS21 (RS52). Same test as C.1 except that setpoint is 134°F.	____	____
2. RS22 (RS53): Setback RS29 (RS56): Auxiliary Reverse Same test as C.2 except that setpoint is 135°F.	____	____
3. RS23 (RS54): Drop-Out Scram R28 RS23X (RS55): Make-Up Scram R28X Same test as C.3 except that setpoint is 140°F.	____	____

Example 2.3. (Continued)

E. Count Rate Recorder

Conditions: Have log CRM in USE; count rate period recorder OFF and indicating an infinite period; count rate recorder OFF; log N recorder OFF and cranked left of 0.001 N_L; fission chamber in AUTOMATIC.

1. RS8, 9. Monitor the voltage on wire 146 at R65-3 with the count rate recorder cranked from left to right[3]. The following should be observed: below 1.5 cps, no voltage; above 1.5 cps and below 8000 cps, 115 VAC; above 8000 cps, no voltage and fission chamber should begin to withdraw. _____

2. RS40. Crank recorder to left, above 100 cps fission chamber should continue to withdraw. As recorder is cranked through 100 cps fission chamber should stop withdrawing. _____

3. RS41. Crank recorder left of 20 cps. Press instrument start request button. Fission chamber should start inserting. As recorder is cranked right through 20 cps, R67[4] should pick up and fission chamber should stop inserting. After instrument start is obtained crank recorder left through 20 cps and "instrument start trip out" annunicator will sound. Clear this annunicator by cranking log N recorder to right through 0.6 N_L. Turn C.R. recorder on and establish C.R. at >1.5 cps and <8000 cps. _____

4. RS39. Monitor the voltage on wire 146 at R65-3 and observe the following: calibrate switch in USE - wire has 115 VAC; calibrate switch in CALIBRATE - wire has no voltage. Return calibrate switch to USE. _____

---

[3]R65 is located in cabinet "A" - rear: column 2, row 3.

[4]R67 is located in cabinet "A" - rear; column 5, row 5.

Example 2.3. (Continued)

F. Gamma Chamber Recorders — #1 ____ #2 ____

Insure all scrams are cleared and that all clutches are made up or simulated. When recorder is cranked right through 147, magnet power will be cut off. (This is observed at magnet amplifiers since scram relays are not effected.) ____ ____

G. Safety Level Recorders — #1 ____ (#2) ____ [#3] ____

Conditions: Obtain RUN and then SERVO for all tests. Turn all safety level recorders OFF.

1. RS30 (RS31) [RS32]: Setback
   RS12 (RS13) [RS14]: Alarm
   Raise SERVO SETPOINT (demand) to ~3 Mw. As recorder is cranked to the right through 1.1 N_F (110) the servo demand should start decreasing and SAFETY LEVEL annunicator should sound. Crank recorder left to clear annunciator and stop setback. (Check all three channels before proceeding to G.2.) ____ ____ ____

2. RS67 (RS68) [RS69]. Raise servo setpoint (demand) to ~3 Mw. Crank all recorders left of 0.6 N_F (60). Remove jumper on R79 so that reactor cooling flow is simulated as <17,000 gpm but >14,000 gpm. As recorder is cranked right through 0.6 N_F (60) servo demand should start decreasing. Setback should stop as recorder is cranked left of 0.6 N_F (60). (Check all three channels and restore jumper on R79 before proceeding to G.3.) ____ ____ ____

3. Same test as G.2. Except remove jumper on R-78 so that reactor ΔP is simulated as <21.4 psi but >15.3 psi. (Check all three channels and restore jumper on R-78 before proceeding to G.4.) ____ ____ ____

4. RS44 (RS45) [RS46]. As recorder is cranked to right through 1.2 N_F (120) a REVERSE should occur. Turn on recorder. ____ ____ ____

Example 2.3. (Continued)

H. Log N Period Recorders	#1	(#2)
1. RS33 (RS65). Obtain RUN. Obtain SERVO. Crank log N recorder to right of 1.8 N_L. Raise servo setpoint (demand) to ~3 Mw. As log N period recorder is cranked left through -100 sec R82[5] should pick up. By cranking ΔT recorder right through 135°F a SETBACK should be initiated. After the setback continues for ~10 sec crank period recorder to right through -100 sec. R82 should drop out and ~5 sec later a REVERSE should occur. (Check channel #2 by cranking outlet temperature recorder right through 135°F.	_____	_____
2. RS1 (RS61). Crank the log N recorder between 0.33 N_L and 0.001 N_L. As period recorder is cranked right through 30 sec R4[6] should drop out. Push a shim rod WITHDRAW button and R6[7] should not pick up. With reverse-bypass switch in BYPASS R4 should pick up and pushing a shim rod WITHDRAW button should pick up R6.	_____	_____
3. RS2 (RS62). Monitor the voltage on wire 146 at R65-3 as the period recorder is cranked from left to right. The following should be observed: to the left of 20 sec - 115 VAC; as recorder is cranked right through 20 sec - no voltage; push FAST PERIOD PERMIT button and hold reverse-bypass switch in BYPASS - 115 VAC. (Maintain this condition for test H.4.)	_____	_____
4. RS42 (R64). As period recorder is cranked to right through 10 sec voltage of wire 146 at R65-3 should drop from 115 VAC to zero[8].	_____	_____
5. RS3 (RS63). As period recorder is cranked right through 5 sec a REVERSE should occur and the 5 SECOND PERIOD annunicator should sound.	_____	_____

[5] R82 is located in cabinet "A" -front: column 7, row 3.
[6] R4 is located in cabinet "A" -rear: column 1, row 3.
[7] R6 is located in cabinet "A" -rear: column 2, row 2.
[8] To take the reactor out of FAST PERIOD PERMIT mode temporarily jumper wire 321 to L-1 on R10. R10 is located in cabinet "A" -front: column 2, row 6.

Example 2.3. (Continued)

I. Count Rate Period

1. RS37. Set the selected log N period recorder on infinity and the log N recorder between 0.33 N_L and 0.001 N_L. As count rate period recorder is cranked right through 30 sec R4 should drop out. Push a shim rod WITHDRAW button and R6 should not pick up. With reverse bypass switch in BYPASS R4 should pick up and pushing a shim rod WITHDRAW button should pick up R6. _____

2. RS36. Monitor the voltage on wire 146 at R65-3 as the period recorder is cranked from left to right. The following should be observed: to the left of 20 sec - 115 VAC; as recorder is cranked right through 20 sec - no voltage; with FAST PERIOD PERMIT and with reverse-bypass switch in BYPASS - 115 VAC. (Maintain this condition for test I.3.) _____

3. RS43. As period recorder is cranked to right through 10 sec, voltage of wire 146 at R65-3 should drop from 115 VAC to zero. _____

4. RS38. As period recorder is cranked to right through 5 sec, a REVERSE should occur and the 5 SECOND PERIOD annunciator should sound. (See footnote 8 on previous page.) _____

J. Safety Monitors

	#1	#2	#3
1. Switch the selected log N channel to GROUND and observe that the SAFETY TROUBLE alarm is actuated.	____	____	
2. Disconnect the safety level channel at the preamplifier and observe that the SAFETY TROUBLE alarm is actuated. (Following the test each channel except the last tested should be reconnected.)	____	____	____

Example 2.3. (Continued)

3. With one safety level remaining disconnected from test J.2, disconnect one of the remaining safety level channels at the preamplifier. The TWO SAFETY TROUBLE annunciator should alarm and a reverse should be observed. (Indicate channels disconnected during this test.) _____ _____ _____

K. Primary Cooling Water Activity Monitors

1. Reactor. Cut recorder off. As recorder is cranked right through 200 mr/hr an alarm should occur. _____

2. Pool. Same test as K.1, except that setpoint is 30 mr/hr. _____

L. Secondary Cooling Water pH Monitors	Reactor	Pool
1. Recorder High Alarm Point. This test must be made with the recorder operating and, thus, the balancing motor must be opposed manually. As recorder is cranked to right through 7.75, an alarm should occur.	_____	_____
2. Recorder Low Alarm Point. Same test as L.1 except alarm occurs as recorder is cranked left through 6.75.	_____	_____
3. Recorder Power Failure. Insure that no alarm exists on the channel. An alarm should occur as recorder amplifier is turned off.	_____	_____
4. Local Indicator Power Failure. Insure that no alarm exists on the channel. An alarm should occur as power is cut off of local pH indicator. At the same time, the control room recorder should drive to the left and remain there until power is restored.	_____	_____

Example 2.3. (Continued)

M. Pump Bearing Temperature Alarm

1. Turn recorder (at main pump house annex) OFF. An alarm should occur. _____ _____

2. Crank the recorder to the extreme right. While observing the recorder indication, turn on the recorder. As recorder drives to left, record the indication when the alarm clears (~94°C). _____ _____

N. Building Ventilation

Conditions: Obtain RUN. Set log N period recorder on infinity and set log N recorder >1.8 N_L. (These conditions will remain in effect for test O.) _____

1. Jumper 424 to L1 (on FF-1) in TB-A _____

2. RS-82 (FS-59A). Obtain SERVO. Raise servo demand. Close damper in ORR basement to the half closed position (This stops air flow in the duct in which the sail switches are located). Observe that an ALARM and SETBACK occur. After ~5 sec a REVERSE should occur. The anemometer should read ~2500 cfm. _____

3. Open damper. _____

4. Remove the jumper (424 to L1) on FF-1 in TB-A. _____

5. Jumper 423 to L1 (on FF-1) in TB-A. _____

6. RS-83 (FS59B). Same test as N.2. _____

7. Remove the jumper (423 to L1) on FF-1 in TB-A. _____

O. Normal Off-Gas

Conditions: Obtained in Step N. (These conditions will remain in effect for test P.)

Example 2.3. (Continued)

1. PS63A. Obtain SERVO. Raise servo demand. Slowly equalize the dp cell, PT-63, on the second level, north balcony. Observe the RED pen on the normal off-gas recorder. When the indicated vacuum is decreased to $<|-25|$ in. wg, an ALARM should occur. _____

2. RS88 (PS63B): Setback.
   RS89 (PS63C): Reverse. Continue equalizing the dp cell, PT-63. When the indicated vacuum is decreased to $<|-20|$ in. wg, a SETBACK should be initiated. When the indicated vacuum is decreased to $<|-19|$ in. wg, the voltage on wire 420Q in JB-PX No. 2 should be decreased to zero volts (indicating that an experiment reverse has been initiated). _____

3. Reactivate the dp cell, PT-63. _____

4. PS64A. Obtain SERVO. Raise servo demand. Slowly equalize the dp cell, PT-64, in the process instrumentation panel (east of the pipe chase entrance in the ORR basement). Observe the GREEN pen on the normal off-gas recorder. When the indicated vacuum is decreased to $<|-25|$ in. wg, an ALARM should occur. _____

5. RS90 (PS64B): Setback.
   RS91 (PS64C): Reverse. Continue equalizing the dp cell, PT-64. When the indicated vacuum is decreased to $<|-20|$ in. wg, a SETBACK should be initiated. When the indicated vacuum is decreased to $<|-19|$ in. wg, the voltage on wire 420R in JB-PX No. 2 should be decreased to zero volts. _____

6. Reactivate the dp cell, PT-64. _____

P. Pressurizable off-gas

Conditions: Obtained in Step N.

1. PS61A. Obtain SERVO. Raise servo demand. Slowly equalize the dp cell, PT-61, on the second level, north balcony. Observe the GREEN pen on the pressurizable off-gas recorder. When the indicated vacuum is decreased to $<|-25|$ in. wg, an ALARM should occur. _____

Example 2.3. (Continued)

2. RS86 (PS61B): Setback.
RS87 (PS61C): Reverse. Continue equalizing the dp cell, PT-61. When the indicated vacuum is decreased to $<|-20|$ in. wg, a SETBACK should be initiated. When the indicated vacuum is decreased to $<|-19|$ in. wg, the voltage on wire 420P in JB-PX No. 2 should be decreased to zero volts. _____

3. Reactivate the dp cell, PT-61. _____

4. PS60A. Obtain SERVO. Raise servo demand. Slowly equalize the dp cell, PT-60, on the east side of the pressurizable off-gas filter pit. Observe the off-gas recorder. When the indicated vacuum is decreased to $<|-25|$ in. wg, an ALARM should occur. _____

5. RS84 (PS60B): Setback.
RS85 (PS60C): Reverse. Continue equalizing the dp cell, PT-60. When the indicated vacuum is decreased to $<|-20|$ in. wg, a SETBACK should be initiated. When the indicated vacuum is decreased to $<|-19|$ in. wg, the voltage on wire 420N in JB-PX No. 2 should be decreased to zero volts. _____

6. Reactivate the dp cell, PT-60. _____

Q. Restore control system to normal as indicated in Section I.A. _____

II. Checks with Actual Flow
(With raise-test switch in NORMAL)

A. Reactor Primary Cooling System

1. Setback (See test G.2)

With the primary bypass valve in manual control and set at ~40% open, start the primary pumps and fully open the pump discharge valve while observing relays R78 and R79. _____

a. RS66 (PdX 55A), R78. R78 should drop out when reactor $\Delta P < 21.4$ psi. _____

b. RS16 (FX1A1), R79. R79 should drop out when reactor cooling flow $<17,000$ gpm. _____

Example 2.3. (Continued)

c. Reduce flow to <17,000 gpm (i.e., full flow from two pumps for next test). _____

2. Scrams (due to low flow)

a. Conditions:

To simulate reactor ΔP (>15.3 psig) in scram circuits:
Jumper 339A to 340 in JB-PX No. 1 _____
Remove wire 358 in JB-PX No. 1 _____

b. RS17 (FX1A3), R28
RS17X (FX1A4), R28X
Reduce cooling flow slowly. As flow decreases to <14,000 gpm, a SCRAM condition should be observed on both channels. _____

c. Increase cooling flow (i.e., full flow from two pumps) and clear all scrams. _____

d. To restore normal conditions:
Remove jumper (339A to 340) in JB-PX No. 1 _____
Replace wire 358 in JB-PX No. 1 _____

3. Scrams (due to low ΔP)

a. Conditions:

To simulate reactor cooling flow (>14,000 gpm) in scram circuits:
Jumper 339 to 339A (on CP-18) in TB-A _____
Remove wire 359 (on CP-18) in TB-A. _____

b. RS24 (PdX 55C), R28
RS24X (PdX 55B), R28X
Reduce cooling flow slowly while observing reactor ΔP. As ΔP decreases to <15.3, a SCRAM condition should be observed on both channels. _____

c. Increase cooling flow (i.e., full flow from two pumps) and clear all SCRAMS. _____

d. To restore normal conditions:
Remove jumper (339 to 339A) on CP-18 in TB-A _____
Replace wire 359 (on CP-18) in TB-A. _____

Example 2.3. (Continued)

4. Activation of Low-Level Scram Circuits

a. The Console (left panel) Meter monitoring the low level scram circuit for No. 1 safety channel should increase (from the previous zero reading) to >10 when cooling flow is decreased to $<$ 12,000 gpm. _____

b. Same as previous test except that the monitoring meter for No. 2 safety channel should be activated when ΔP is decreased to <11 psi. _____

c. Same as previous test except that the monitoring meter for No. 3 safety channel should be activated when Raise-Test switch is in TEST position. _____

B. Pool Primary Cooling Flow

1. Conditions:

Establish full pool cooling flow ($\sim$700 gpm) _____
Jumper L.1 to 125A (on RF 3B) in JB-PX (run mode will be obtained). _____
(The selected log N recorder should be $<0.33\ N_L$.) _____

2. RF 3B-1. Slowly decrease pool cooling flow. As flow decreases to $<$550 gpm, the reactor should drop out of RUN mode. _____

3. Remove the jumper (L.1 to 125A) in JB-PX. _____

4. Increase pool cooling flow to $\sim$700 gpm. _____

C. North and South Facility Cooling Flow

Conditions: Establish reactor cooling flow $>$17,000 gpm. Establish facility cooling flow using a facility cooling pump. Obtain RUN. Set log N recorder $>1.8\ N_L$. (In each test the first recorder switch listed is in the setback circuit, the second in the auxiliary reverse circuit, and the flow switch in the alarm circuit.)

1. RS78, RS79, FS302A1. Obtain SERVO. Raise servo demand. Open the equalizing valve on FT 302A[9]. Observe that an ALARM and SETBACK occur. After ~5 sec a REVERSE should occur. Close the equalizing valve. _____

2. RS80, RS81, FS302B1. Same test as II.C.1 except that FT302B[9] is equalized. _____

3. RS70, RS71, FS731A1. Same test as II.C.1 except that FT731A[10] is equalized. _____

4. RS72, RS73, FS731B1. Same test as II.C.1 except that FT731B[10] is equalized. _____

5. RS74, RS75, FS751A1. Same test as II.C.1 except that FT751A[10] is equalized. _____

6. RS76, RS77, FS751B1. Same test as II.C.1 except that FT751B[10] is equalized. _____

III. Annunciator Check List

A. Process Annunciators	As Found Condition: Alarm	Lights	Remarks
AP 1. Test Blocks			
AP 2. Test Blocks			
AP 3.			
AP 4.			
AP 5. Pool Demin. Resistivity			
AP 6. Storage Tank Level			
AP 7. Pool Water Activity			
AP 8. Pool Water Low Resistivity			
AP 9. Pool Cooling Temp. >95°F			
AP10. Pool Level			
AP11. Reactor Pressure			

[9] Located in north-south facility switch panel (north of subpile room).
[10] Located in process instrumentation panel (east of pipe chase entrance).

Example 2.3. (Continued)

		As Found Condition		
		Alarm	Lights	Remarks
AP12.	Facility Cooling			
AP13.	ΔT			
AP14.	R Demin. Exit Resistivity			
AP15.	R Outlet Temperature			
AP16.	R Inlet Temperature			
AP17.	R Water Activity			
AP18.	R Water Low Resistivity			
AP19.	Main Flow			
AP20.	Low Shutdown Coolant			
AP21.	Freezing			
AP22.	Water Test			
AP23.	No Pool Cooling Pump			
AP24.	Emergency Pump Blocked			
AP25.	Reactor Δ Pressure			
AP26.	Reactor Tower Fans			
AP27.	Degasifier			
AP28.	Main Pump Bearing Temp.			
AP29.	Catch Tank			
AP30.				
AP31.	Pool Tower pH			
AP32.				

Example 2.3. (Continued)

		As Found Condition		
		Alarm	Lights	Remarks
AP33.	R Exch. Sec. Pump Press. Lo			
AP34.	R Tower Basin Water (Level)			
AP35.	R Exchanger Sec. Temp.			
AP36.	DC 3			
AP37.	R Tower Basin			
AP38.	DC 2			
AP39.	R Tower pH			
AP40.	DC 1			
AP41.				
AP42.	R Sec. Radiation High			
AP43.				
AP44.	P.O.G. Press. Hi			
AP45.	N.O.G. Press. Hi			
AP46.	Degas. Activity Hi			
AP47.				
AP48.				
AP49.				
AP50.				
AP51.				
AP52.				
AP53.				
AP54.				

Example 2.3. (Continued)

		As Found Condition		
		Alarm	Lights	Remarks
AP55.				
AP56.				
AP57.	Build. Vent. Lo			
AP58.	Scrubber Elect.			
AP59.	Caustic Level Lo			
AP60.	Emerg. Pump Start			
AP61	Sump Level High			
AP62.	Pump No. 1 Failure			
AP63.	Sump Level Low			
AP64.	Pump No. 2 Failure			
B. Nuclear Annunciators				
AN 1.				
AN 2.	Experiment Reverse			
AN 3.	Experiment Setback			
AN 4.				
AN 5.	Instrument Start Trip-out			
AN 6.				
AN 7.	Monitrons			
AN 8.	Air Monitors			
AN 9.	Fast Scram			
AN10.	5 Sec. Period			
AN11.	Insert 5 Rods			
AN12.	1.8 N_L in Start			

Example 2.3. (Continued)

	As Found Condition		
	Alarm	Lights	Remarks
AN13. Safety Level			
AN14. Safety Trouble			
AN15. Servo wdr Limit			
AN16. Two Safety Troubles			
C. Experiment Annunicators			
AE 1. GCPR Common			
AE 2. GCPR Exp. 1			
AE 3. GCPR Exp. 2			
AE 4. GCPR Exp. 3			
AE 5. GCPR Exp. 4			
AE 6. GCPR Exp. 5			
AE 7. GCPR Exp. 6			
AE 8. GCPR Exp. 7			
AE 9. F-9 Shields			
AE10. B-9 Reagan			
AE11. C-1 Carroll			
AE12. GCPR Exp. 8			
AE13. F-2 GE			
AE14. F-1 Waugh			
AE15. HN-1 REED			
AE16. B-1 GE			
AE17. Solid State			
AE18. MSR			

Example 2.3. (Continued)

		As Found Condition		
		Alarm	Lights	Remarks
AE19.	GCR Loop 1			
AE20.	South Facility (18-in. plug)			
AE21.	GCR Loop 2			
AE22.	Hydraulic Tube			
AE23.				
AE24.				

2.6. Special Instrument Procedures

2.6a. Positioning of Ion Chambers

The proper operation of the ORR control and safety system depends upon proper location of ion chambers. Since the flux at any ionization chamber location can and usually does vary during a reactor operating cycle, and can change from cycle to cycle, this procedure will establish certain ranges of normal operation. Experience has shown that approximately a 5% change in neutron flux at a chamber location is expected during a fuel cycle due to a change in rod positions caused by fuel burnup. Since the flux at chamber locations usually goes up during the operating cycle, the chambers should be positioned to give readings near the lower end of their allowable range, when positioned near the beginning of a cycle, and near the upper end when positioned toward the end of a cycle.

Since reactor heat power is the calibrating parameter and is approximately equal to the neutron flux in the reactor, it will be the basis for chamber positioning. Disagreement between neutron chamber readings and heat power measurements will be compensated by adjusting chambers according to this procedure. No chamber should be moved to a less sensitive position without complete confidence in the information used as a basis for such a change.

Safety Chambers

The position of the safety chambers should be such that full power operation causes the channels to operate in the range from 95% to 100% of N_F. Higher readings than this can cause the reactor to be subject to unnecessary shutdown or momentary interruption in operation. Lower

readings effectively raise the reactor scram point. These chambers should be relocated only with the reactor operating at or near full power and only with complete confidence in the heat power level of the reactor. Obviously, if these chambers prevent, by their safety action, attainment of full power, the movement of the chambers must be done at a lower (measurable) heat power. This condition is not likely to exist except when the normal operating level has been changed, a chamber replaced, or when beam-hole configuration has been changed. Under these conditions, routine procedures are inadequate. While the safety chambers are being moved, the reactor should be operating on servo to free the operator to observe critical instrumentation. All chambers should not be repositioned at the same time, i.e., if repositioning of all three chambers is required to obtain the desired reading, one chamber will remain unchanged until reliability is established on the repositioned chambers.

Servo-Micromicroammeter Chamber

The proper operation of the servo can demand that the chamber deliver up to 20 microamperes at full power. For this reason the range chosen for proper control is from 18.2 to 20 microamperes for full power operation. If the chamber is too close to the reactor, the servo can never demand full power, whereas if the chamber is too far away, the range of operation of the servo is reduced, preventing proper functioning of the reactor setback. Proper calibration is then obtained at the beginning of the cycle by positioning the chamber to give a current of 18.2 μA (or slightly more) at full power. This is done with the reactor being manually controlled and by reading the output of the micromicroammeter. It should be noted that, as a general rule, this chamber should be moved only after the safeties have been placed in their proper place, since manual operation is

more likely to produce power drifts than servo operation. This rule is especially important if there is evidence that the safety chambers are too far from the reactor lattice (reading too low).

The micromicroampere range selector for the flux recorder is set at its most sensitive point. This point is that which has the flux recorder indicating between 0.8 and 1.0 where 1.0 is the full scale reading on the recorder.

Log-N Chambers

The location of these chambers is critical because of their interaction with the servo control features of the reactor near N_L (1% full power). In order that the reactor may be put into the run mode, the log-N level must indicate above .6 N_L. If the log-N chamber position is too far from the core (relative to the servo chamber), the lower end of the servo range (1.1 N_L) will be attained before the log N reads .6 N_L. In this case the servo will control at this level and the run mode cannot be established by normal procedures, since the servo demand can be increased only after the run mode is established. This requires the operator to turn off the servo, raise power manually, push run button, raise demand and go into servo operation. On the other hand, if the log N reads greater than 1.8 N_L before the run mode has been established, a reverse is initiated, thus the log-N chamber must not be too close to the reactor. If the servo chamber is presumed properly positioned (as it usually is from the previous run) then the log-N chambers should be positioned to give a reading of 1.1 N_L when the servo is controlling at its lower demand limit. This should be done with the reactor operating in servo and with log-N period circuits disabled if this appears to be necessary to prevent scrams

and control actions. Since two log-N channels are not present, it is easy to position the nonoperating chamber without removing control functions of the operating log-N channel. If, after reaching full power, it should become evident that the servo chamber should be moved, as in paragraph above, the log-N chamber should be moved to give the same current ratio change. Due to nonlinearities in the log-N channel, the log N will not in general read 100% at full power, even though it may read 1% at 1% power.

The discussion above is for routine chamber relocation. Unless gross changes in loading or operation of the reactor occur, such repositioning should seldom be required. There is a shading effect between nearby chambers which may have to be considered during the above operations. If possible, an adjacent chamber should not be used as a power reference during movement of a second chamber.

2.6b. Dual Log-N System

To minimize reactor down time due to instrument failure in the log-N channel, a dual log-N channel has been designed and installed.

This design is intended to provide two complete log-N channels from the chamber to the output of the period amplifier. Each channel is independent except for the switching mechanism which permits the use of either, but not both, channels at any time. The selection of a channel as the operating channel with the SB switch will: (a) connect all reactor control functions associated with the log N and log-N period to the recorder switches of the operating channel only; (b) connect the input of the period sigma amplifier to the output of the period amplifier of the operating channel; (c) connect the safety trouble monitor circuits associated with the period sigma amplifier to only the operating channel; (d) actuate

pilot lights at the recorders (log N and period) and log-N amplifiers to indicate the "operating" channel; (e) completely remove the remaining channel from reactor controls thereby permitting maintenance, calibration, etc., without endangering the operation of the reactor.

Operation

To effectively utilize this dual system, certain steps must be followed. They are listed below.

1. Prior to startup

   a. Check to assure that with the SB switch in position No. 1, the channel designated as No. 1 will be the selected channel and will be indicated by:

      1) Pilot lights, located in the upper right corner of both the log N and the period recorders, which will be energized. These recorders are located on the panel board in the top row.

      2) Pilot light, located between the log-N amplifier and period amplifier in amplifier cabinet A, should be energized.

   b. With the SB switch in position No. 2, channel No. 2 will be selected and will be indicated by:

      1) Pilot lights, located in the upper right corner of both the log N and period recorders, which will be energized. These recorders are located on the panel board in the second row.

      2) The pilot light, located between the log-N amplifier and the period amplifier in amplifier cabinet C, should be energized.

c. Both channels should be calibrated and ready for service.

d. One of the two channels should be selected for use. The channel to be used will normally be alternated from one cycle or midcycle to the next.

e. The circuit is designed to "make, before break" which assures that one channel will always be selected regardless of the SB switch position. As the SB switch is moved from one position to the other (e.g., channel No. 1 to midposition to channel No. 2), the panel lights associated with channel No. 1 will be de-energized. Channel No. 1 will, however, remain the selected channel until position No. 2 in actuated, thereby energizing the complete channel including the panel lights associated with the circuit and de-energizing No. 1 channel from the reactor controls.

2. During operation

a. The channel <u>not selected</u> is available for calibration, maintenance, etc.

b. If the selected channel should become defective during operation, regardless of its effect on reactor power:

1) Calibrate the "not selected" channel and assure it is operating properly before it is selected.

2) Using the SB switch, select the channel which is operable.

3) The defective channel will then be available for repair.

2.6c. Servo Limit Switch Assembly

The servo system for the ORR has been designed to use any shim rod as the servo controlled rod. Because the reactivity of each rod is

approximately 8%, a device is needed which limits the amount of reactivity controlled by the servo to a value of approximately 0.5% maximum, while allowing the servo controlled rod to operate at any point in its travel. This device, the servo limit switch assembly, consists of a set of limit switches, an actuating cam, a mechanical differential and associated drive motors, indicators, etc. The control circuits for moving the actuating cam and those circuits involving the limit switch contacts are constructed so as to limit the amount of positive reactivity which can normally be added to the reactor by the servo. This is done without limiting the amount of negative reactivity available to the servo, and without reducing the rod worth available for shimming and safety. A block diagram of the system is shown in Figure 2.5.

The operation of the servo limit switch assembly is as follows:

The fine position selsyn transmitter, TX-2, rotates one revolution per inch of travel of the shim rod. The output of this transmitter, is fed into a control transformer, CT-1, which is made to reproduce the position of TX-2 by means of a modified Brown amplifier and the motor M-2. TX-3 is a selsyn transmitter used to re-transmit fine position information if needed. It is not used in the ORR, but could be used if TX-2 were too small to drive both RX-2 and CT-1. The position of the shaft of M-2, and hence the position of the shim rod drive, is fed into a mechanical differential. If M-3 is not rotated, the output shaft of the differential rotates through an angle which is half that of the angular rotation of M-2. Thus one inch of rod motion is reproduced as one-half revolution of the output shaft of the differential. The calibration dial has 200 divisions and so reads motion of the rod in hundredths of an inch. If M-2 is

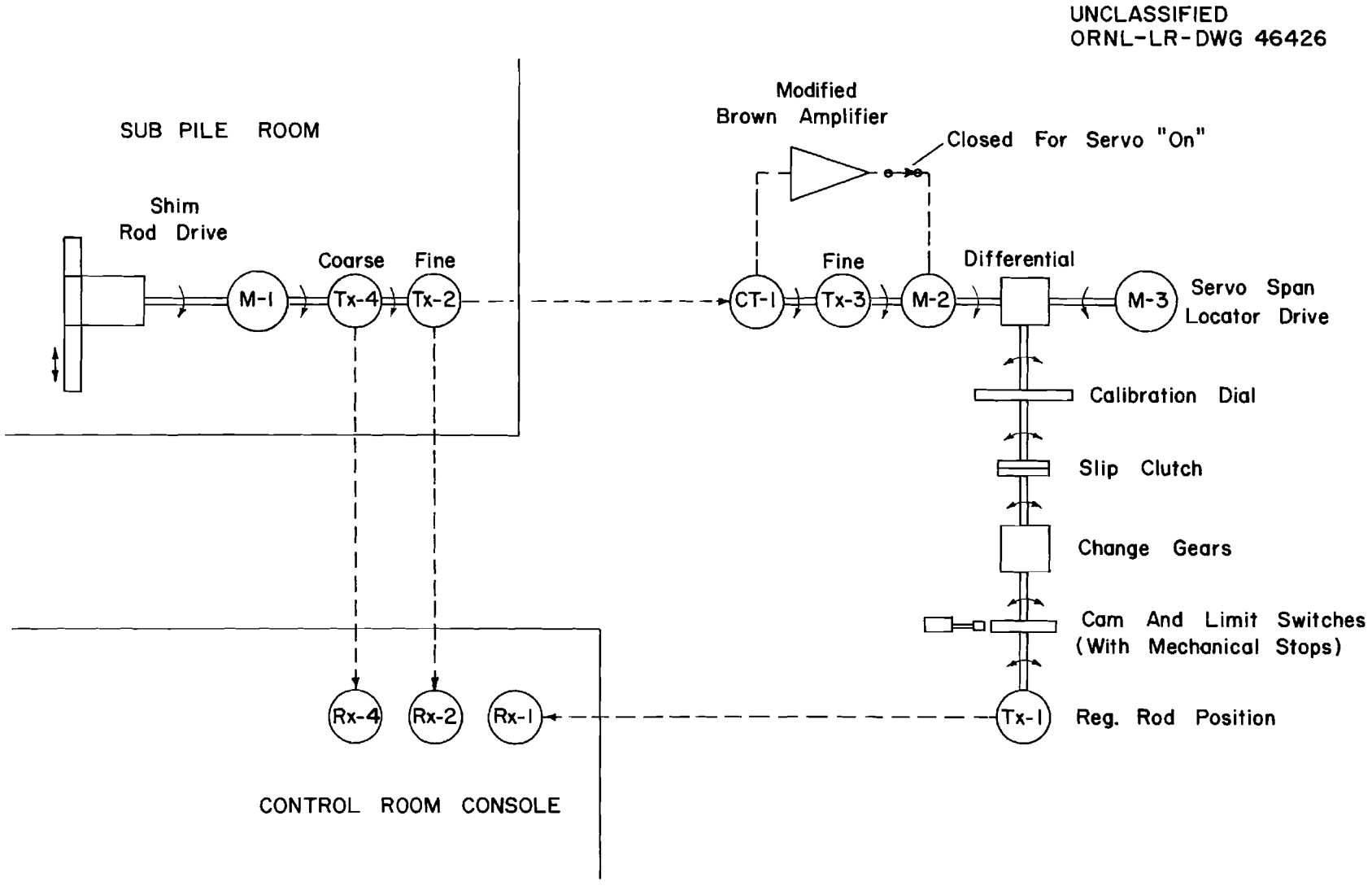

Fig. 2.5. Block Diagram – Servo Limit Switches

stationary, rotation of M-3 also moves the output shaft of the differential. The output shaft then is a measure of the difference between the rotation of M-2 (rod position) and M-3. We call M-3 the "Servo Span Locator Drive" since its function is to fix the location of the portion of the shim rod travel which is to be used for servo control. Its motion is subject to all shim rod interlocks.

The output shaft drives, through a slip clutch and two changeable spur gears, a limit switch actuating cam with mechanical stops at each end. The switches are spaced over a 180° arc and are successively actuated and maintained in the actuated position as the cam rotates over the allowed 180°. The arrangement of the circuits is such that M-3 and the shim rod drive motor are prevented from driving the cam into the mechanical stops in either direction. The amount of motion of the shim rod required to drive the cam 180° is determined by the change gears. The choice of gears is made on the basis of rod worth in $\Delta k/k$ per inch near the center of the shim rod motion so that over the span something like 0.5% $\Delta k/k$ is turned over to the servo. If the servo controlled rod reaches either end of the span it is necessary, in order to move the regulating rod farther, to energize M-3 which moves at a speed which is equivalent to (in terms of rotation of the cam) slightly less than normal shim speed. To move M-3 in a direction to allow the servo controlled rod to withdraw (effectively "withdraw the limit switches") the operator must manually operate the "Withdraw" switch for the servo controlled shim rod. This operation is automatic in two special cases during start. To allow the servo controlled rod to insert ("insert limit switches") the operator must actuate the "Insert" switch for the servo controlled rod. This is

done automatically by certain "reverse" signals in the reactor control system.

TX-1 is a selsyn transmitter which rotates 270% for 180° rotation of the limit switch actuating cam, thus its shaft position is an indication of the relative position of M-2 and M-3 and therefore the position of the regulating rod in its available span. Withdrawal of the shim rod moves the selsyn indicator towards its upper limit while "insertion of the limit switches" (actually manipulation of the shim rod insert switch or automatic operation of the shim rod insert relay) moves the indicator in the same direction, provided the servo controlled rod is not moved.

In the ORR, No. 6 shim rod is presently used as the servo controlled rod and the detailed operation of the system is as follows:

Servo Operation of the Reactor

1. Motion of No. 6 rod is coupled to one input of the mechanical differential through the fine position transmitter, a control transformer, and a torque amplifier.
2. Number 6 rod moves only in response to a signal from the reactor power level servo.
3. The servo span locator drive motor (M-3) is coupled to the other input of the differential and operates on manual and automatic shim rod operate signals, except that the "Insert 5 rods" signal does not operate the motor.
4. The output of the differential drives the limit switch actuating cam and selsyn transmitter, TX-1, through a changeable gear ratio which is used to set the span of servo controlled operation of No. 6 rod. This cam has mechanical stops and a slip clutch.

The limit switches which are encountered as the regulating rod is inserted are in the following order:

a. Withdraw limit (contacts closed in withdraw limit only).

b. Middle limit (contacts closed as rod is inserted until the middle limit switch is reached, then it opens and remains open for remainder of stroke).

c. Preferred limit (contacts close upon reaching this limit and remain closed).

d. Insert 5 rods (Reverse) Limit (Closed at this limit only).

5. The limit switches perform the following function as the servo controlled rod progresses from the withdraw to the reverse limit.

a. With the actuator in the withdraw limit (servo controlled rod at upper end of its servo span).

1) Number 6 rod cannot be withdrawn any farther.

2) The servo span locator drive motor cannot be energized to move the limit switch actuating cam farther into the withdraw limit.

3) An annunciator sounds, indicating that No. 6 rod has been withdrawn, by the servo, to this limit and cannot add more reactivity. The operator must then manually add more reactivity by pulling another shim or by operating M-3 (using shim rod No. 6 manual controls). Operating M-3 moves the actuating cam out of the withdraw limit which then allows the servo error to move the regulating rod out to add the required reactivity to satisfy the servo demand. This is done at approximately 85% shim

speed and under shim rod interlocks. (In case the operator is manually raising power demand, the annunciator is not operated and the "preferred" shim rod is withdrawn until the limit switch actuator leaves the "withdraw" limit).

b. With the actuating cam at or below the preferred limit.

1) If any rod but No. 6 is the "preferred" rod, this preferred rod is inserted until a servo withdraw error causes No. 6 rod to move the actuating cam to a point above the middle limit.

2) If No. 6 rod is "preferred," the servo span locator drive motor turns in a direction to move the limit switch actuator out of the preferred limit and continues to run until the actuator gets above the middle limit. (During this time No. 6 rod and the actuating cam may be moving in response to servo errors).

c. With the actuating cam at the "reverse" or "insert 5 rods" limit

1) Number 6 rod cannot be inserted

2) All rods except No. 6 insert until the servo causes rod No. 6 to move the actuator away from the reverse limit.

3) An annunciator indicates the condition.

d. The middle limit switch is used to effect the seal on the "preferred insert" action (see b above) and to forewarn the operator that the servo rod is approaching the "Preferred" limit switch.

Manual Operation

1. The servo limit switches and the cam operating motors M-2 and M-3 are rendered inoperative.
2. Number 6 shim rod operates just as do all other shims.

Instrument Start

An "instrument start request" energizes the servo span locator drive until the limit switch actuating cam engages the "withdraw" limit switches, after which the instrument start can proceed.

2.6d. Gamma Chambers

Gamma chambers are located on the northeast and southeast sides of the reactor tank and the output of these chambers is recorded in the control room. The purpose of these chambers, which are less sensitive to beam hole environment than the other ionization chambers because of location, is to provide additional protection for changes in beam-hole environment. The relationship between chamber circuitry and reactor controls circuitry permits a quick change in resistance which will vary the recorder voltage about 25%. This permits continuous operation of the gamma chambers through a 25% variation in gamma flux at the chamber.

Attached to the rear of the gamma flux recorder is a small toggle switch box with switch positions identified "hi" and "lo". Normally at the beginning of the cycle, this switch will be in the "hi" (high sensitivity) position which should provide a recorder reading between 90-135 on the recorder. If and when the reading on the recorder increases to 135, the switch should be turned to "lo" (low sensitivity) and the reading should immediately reduce by 25%. WARNING: Switching from "lo" to "hi"

when the recorder is reading greater ~112 will probably result in a scram at ~140 on the recorders.

Any changes made in the switching should be recorded in the shift log book and identified on the recorder chart.

2.6e. Operation of E-panel Switches (Figure 2.2)

ORR experiments are connected to the reactor safety circuits through the E-panels. All the E-panels are provided with individual, keyed switches. Only two keys were purchased for each switch; one is locked in a safe, and the other is locked in a key rack located in the ORR control room. The key rack, in turn, is provided with a lock which requires keys carried by shift or day supervision.

Sometimes it is desirable to remove an experiment from the safety circuit while the reactor is operating, providing the experiment has been properly neutralized. There is, however, a possibility that the wrong experiment may inadvertently be removed from the safety circuit. In order to minimize such an occurrence, the following procedure should be observed when removing an experiment from the safety circuit while the reactor is operating or during shutdown if the shutdown occurred for the purpose of neutralizing the experiment.

1. The supervisor informs the control desk operator of the specific experiment to be removed from the safety circuit and requests that he observe the annunciator panel while the E-panel switch is turned to "disconnect".
2. The supervisor removes the experiment from the safety circuit by turning the E-panel switch to "disconnect".

3. The control desk operator announces to the supervisor which experiment annunciator alarm has sounded, indicating that it has been removed from the safety circuit.
4. The supervisor should check the experiment control panel and observe that the "experiment tie-in" annunciator is in the alarm condition, indicating that the experiment has been disconnected from the reactor safety circuit.

When an experiment is removed from the safety circuit, a notation should be made in the log book as to why the experiment was removed from the safety circuit giving the name of the supervisor who performed the above procedure.

Insofar as reactor safety is concerned, there is no difference between "test" and "disconnect". The "disconnect" position disconnects the experiment from the reactor safety circuit and opens the circuit from the "E-panel" to the experiment, thereby preventing the experimenter from performing any instrument checkouts in the safety tie-in system. The "test" position disconnects the experiment from the reactor safety circuit but allows continuity from the experiment to the "E-panel" which permits the experimenter to simulate any desired condition (scram, setback, or alarm) without affecting the reactor. The indiscriminate use of the two modes for disconnecting an experiment from the reactor safety system does not in any way jeopardize reactor safety. The advantage in adhering to the use of the "disconnect" position when an experiment is not in the reactor is better control of experiment instrument checkout. The "disconnect" position is used when an experiment facility is not in use; and "test" is used for experiment instrument checkout.

2.6f. Fission Chamber

Each time after the reactor has been brought to full power the fission chamber should be completely withdrawn. This will prolong the life of the chamber and its component parts. Normal operation is with the fission chamber withdrawn to the withdraw limit.

2.6g. Instrument Warm-up Time Following a Power Outage

Occasionally it is necessary to return the reactor to power as soon as possible following a power failure. Depending on several variables, time is of essence during an unscheduled shutdown if the reactor is returned to power before Xenon poisoning. However, speed must never jeopardize safety in this phase or any phase of operation.

Following a power outage, all electrical instrumentation on affected circuits is temporarily dead. After the power is restored, there is a minimum warm-up period necessary to provide the reliability required. A review of the safety instrumentation indicates that a warm-up time of five (5) minutes is adequate to provide a reliable control system for startup. This warm-up time is the minimum to be observed for safety level channels, and all other channels will be reliable before this specified time.

The procedure to follow when recovering from a power outage regardless of its duration is as follows:

1. Complete "ORR Power Outage Check List".
2. Observe a five (5) minute warm-up time on the safety level channels.
3. Perform "Jordan Button Test" to assure the safety level channels are reliable.

4. Reactor can be returned to power by following established procedures.

2.6h. Facility Flow Instrumentation

Instrumentation has been provided for the north and south facilities to provide an automatic reduction in reactor power should the flows drop to undesirable levels. Since present components at the south facility depend on a water-filled cavity for shielding, a monitron is installed in this vicinity which will sound a siren if radiation becomes excessive. This description is intended to give brief information on flow-switch identification and read-out information.

North-and South-Facility Flows

The facility flows (south-facility annulus FE-731A and FE-731B, south-facility 24-inch plug FE-751A and FE-751B, and north facility FE-302A and FE-302B) now have alarms and setbacks in the control circuit as part of the process system. They no longer come through the south-facility "E" switch.

Since each of these systems is now "double tracked", there are six new contacts in the annunciator circuit in series with PX-39 (facility-pump discharge-pressure switch) which operate the "facility-cooling" as long as the servo demand is above N_L. The auxiliary reverse-request relay (AG-31) is also operated by low flow. The setpoints are as follows:

	Normal Flow ~110 gpm	
FS 731A1	~80 gpm	Alarm
731A2	61 gpm	Setback
731A3	59 gpm	Reverse

Normal Flow 110 gpm (continued)

FS 731B1	80 gpm	Alarm
731B2	61 gpm	Setback
731B3	59 gpm	Reverse

Normal Flow 100 gpm

FS 751A1	75 gpm	Alarm
751A2	51 gpm	Setback
751A3	49 gpm	Reverse
FS 751B1	75 gpm	Alarm
751B2	51 gpm	Setback
751B3	49 gpm	Reverse

Normal Flow 140 gpm

FS 302A1	100 gpm	Alarm
302A2	71 gpm	Setback
302A3	69 gpm	Reverse
FS 302B1	100 gpm	Alarm
302B2	71 gpm	Setback
302B3	69 gpm	Reverse

The d/p transmitters for the south facility (FE-731 and FE-751) are located at the south-facility transmitter panel on the south side of the basement.

All switches and the north-facility transmitters for FE-302 are located in the new switch panel in the basement just north of the door to the subpile room.

The recorders for the south facility are in the old south-facility switch panel in the basement on the north side of the pool structure. The red pen of each recorder is on FE-731 (annulus flow, 150 gpm FS). The green pen of each recorder is on FE-751 (24-inch-plug flow, 100 gpm FS).

The north-facility flow is not recorded at the present time but is indicated in the switch panel on the two 2-inch receiver gauges in the lower right-hand corner of the panel. To convert readings on this receiver gauge to flow, use the following conversion:

$$\text{Flow } 20\sqrt{\%\text{ of full-scale reading}} \text{ gpm}$$

The contacts for all flow switches are summed up in the basement switch panel and brought up to terminal strip FF1 (just under CP-18) in terminal box "A" in the control room.

GCR Loop No. 2, 18-Inch Plug Flow

The 18-inch plug of GCR loop No. 2 can cause a reactor alarm on "hi" radiation and on low flow. The radiation detector is a monitron with the chamber portable to provide positioning at the desired location. This unit will actuate a local siren if the radiation level becomes excessive. A reactor setback/reverse also occurs on low flow. The signals on plug flow enter the control circuit through the "E" switch labeled "south-facility 18-inch plug". The flow is recorded on panel M-6 of GCR loop No. 2 in the ORR basement. Full-scale flow in this recorder is 35 gpm. Alarm occurs at 20 gpm, and setback occurs at 15 gpm.

The outlet temperature of the 18-inch plug is point 7 and 8 of the temperature recorder of GCR loop No. 2 panel M-7 in the basement and is not connected to the safety circuit. This provides additional information on flow conditions.

2.6i. Low-Level Scram

The reactor control circuitry has been modified to provide additional safety protection when operating the reactor at low power (less than ~450 kw) without normal water flow. This change in circuitry effectively increases the sensitivity of the No. 3 safety channel by a factor of 100 when the "Raise-Test" switch is placed in "Test" position and will effect a scram through the "fast scram" circuitry when the reactor power exceeds ~450 kw.

Standard operating procedure for utilizing the protection offered by the subject change shall be as follows:

Prior to beginning any critical run or low power run when normal water flow conditions are not available:

1. Place the "Raise-Test" switch in the "Test" position.
2. Observe that the No. 3 microammeter which is mounted on the ORR console just above the key switch is reading upscale. This indicates that the "low-level" scram is in effect.

After completing all critical or low power runs, the "Raise-Test" switch should be returned to "normal" position.

It is important to note that if the reactor is operating at power greater than ~450 kw, either with or without water flow, a scram will occur if the "Raise-Test" switch is turned to the "Test" position.

2.6j. Dual Count-Rate Channels

Reference: Reactor Controls Change Memorandum - ORR No. 63

There are two permanent count-rate channels in the control and safety system. Dual channels enhance continuity of operation since only one channel is required for startup operation. The components of both

count-rate channels and their locations are presented in Table 2.1.

A selector switch (S23) has been provided so that either channel No. 1, channel No. 2, or both may be connected to the reactor control and safety system. The setpoints for interlocks are the same for each channel; however, when both channels are selected, an interlock on either channel will initiate safety action. The normal method of operation is with only one channel selected (i.e., not both). Neon indicator lamps are located on the doors of the log-count-rate and count-rate-period recorders. If either No. 1 or No. 2 channel is selected (i.e., the selector switch is not on the "Both" position), the indicator lights for the selected channel are turned on.

The function of the poolside system for audible indication of counting rate is identical for each channel. The audio scaler is located in the left section of amplifier cabinet "E"; the audio amplifier is located in the right section of amplifier cabinet "E". When the audible system is turned on, the position of the toggle switch (on the audio scaler) should be checked to insure that a reliable channel is connected to the audible system. The preferred method of operation is that the position of the toggle switch be changed to correspond with changes in position of the channel selector switch.

In order to prevent excessive burnup of the fission chamber in a channel not selected, an annunciator will remain in the alarm condition until the fission chamber for that channel is fully withdrawn. The preferred method of operation is that the channel not selected be in the automatic mode. If the channel not selected is unreliable, it should be fully withdrawn prior to startup.

Table 2.1. Dual Count-Rate Channels

Item	Channel No. 1	Channel No. 2
Alternate Designation	North Pool-Channel No. 1	Subpile Room Channel
Location of Components		
- Fission Chamber	Vertical Guide Tube (Northernmost of Two Outside N-W Corner of Reactor Tank)	Vertical Guide Tube (Inside Tank Under CP-B8)
- Preamplifier	In Guide Tube	Subpile Room
- Power Supply	Amplifier Cabinet "E" (Right Section)	Subpile Room
- A-1 Amplifier and Log CRM	Amplifier Cabinet "E" (Right Section)	Amplifier Cabinet "E" (Left Section)
- Count-Rate Recorder and C. R. Period Recorder	Vertical Board	Vertical Board
- Chamber-Position Controls and Selsyn	Console Panel "D"	Console Panel "C"

Note: Amplifier cabinet "E" is located in the control room annex.

1963

3. FUELS AND REFUELING

3.1. Introduction

There are four principal areas of concern regarding the storage and handling of fuel at the ORR. The first is the problem of maintaining the reactor itself within specified limits of excess reactivity. The second involves maintaining a place of storage outside of the reactor that is safe by both criticality and radiation standards. Third, fuel movements must be scheduled and effected to minimize personnel radiation exposure, as well as to retain criticality safety. Fourth, records must be maintained to indicate the location, amount, and condition of all fissionable material within the ORR area.

3.2. Fuel Units in Use at ORR

3.2a. Fuel Elements

References: D-24075, C-24076, D-24078, C-24079, C-24080, C-24081, C-24082

The fuel elements used at the ORR are 19-plate assemblies equipped with identical top and bottom end boxes, Figures 3.1 and 3.2. Selected reference dimensions for ORR fuel elements are given in Table 3.1.

Table 3.1. Selected Reference Dimensions for ORR Fuel Elements

Unit	Nominal Dimension
Element Assembly	
Length	38 3/8 in.
Width (through side plates)	2.996 in.
Width (℄ through outside fuel plates)	3.068 in.
Plate spacing	0.104 in. (min)
Inside Fuel Plates	
Thickness (overall)	0.050 in.
Length (overall)	24 5/8 in.
Clad thickness	0.015 in.
Core (alloy) thickness	0.020 in.
Core (alloy) length	23 5/8 in.
Width (before bending)	2.8 in.
Outside Fuel Plates	
Thickness (overall)	0.065 in.
Length (overall)	27 1/8 in.
Clad thickness	0.0225 in.
Core (alloy) thickness	0.020 in.
Core (alloy) length	23 5/8 in.
Width (before bending)	2.8 in.
End Box Locating Pads	
Distance (through flat sides)	3.032 to 3.034 in.
Distance (concave to convex side)	3.186 to 3.188 in.

UNCLASSIFIED
PHOTO 41728

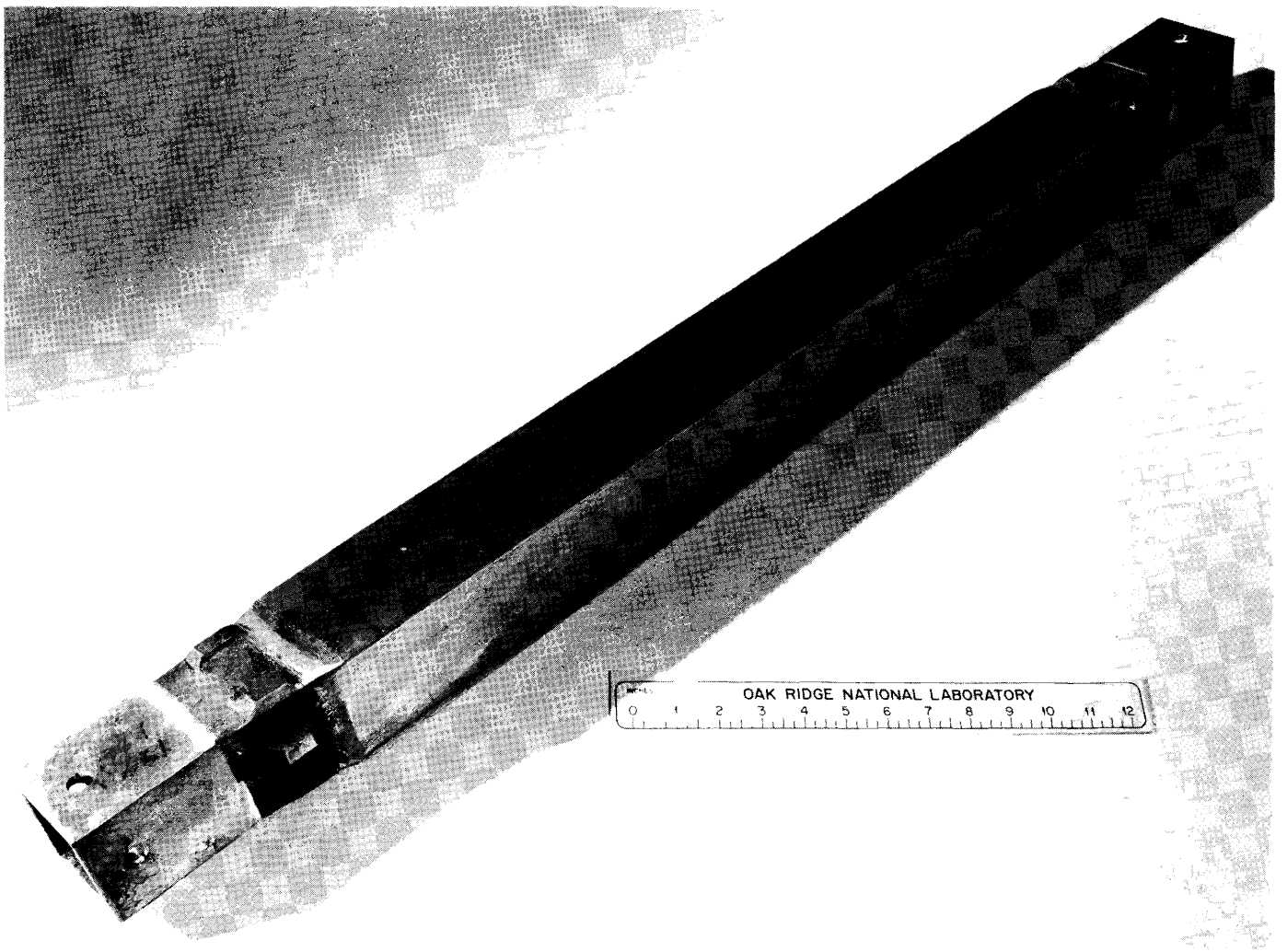

Fig. 3.1. ORR Fuel Element — Side View

UNCLASSIFIED
PHOTO 41730

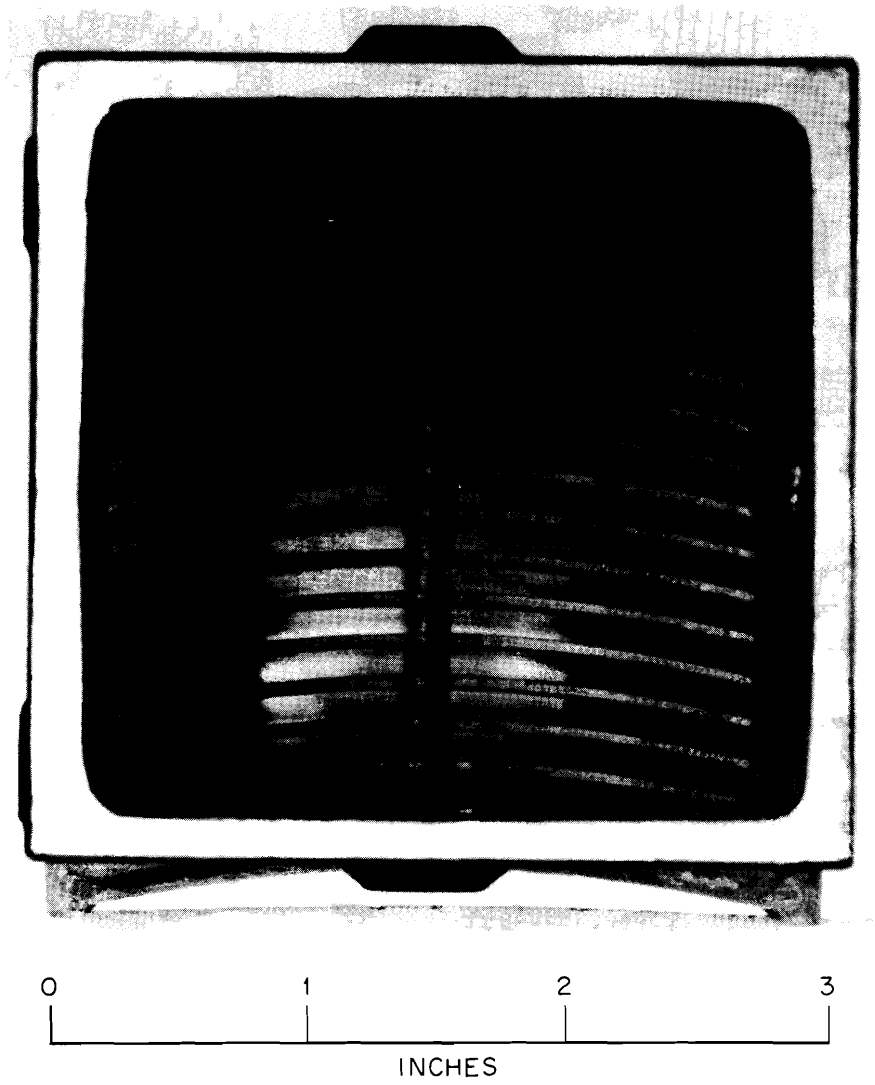

Fig. 3.2. ORR Fuel Element — End View

Selected reference weights for ORR fuel elements (including only the section defined by the length of the inside fuel plates) are given in Table 3.2.

Table 3.2. Selected Reference Weights for ORR Fuel Elements

Description of Components	Nominal Weight (kg)	
Nineteen fuel plates		3.26
Alloy Cores (18 wt % U, balance Al)	1.15	
Cladding (Al)		
Seventeen 0.015-in.-thick plates	1.77	
Two 0.065-in.-thick plates	0.34	
	3.26	
Two side plates (Al)		1.15
Two combs (Al)		0.01
		4.42

For reference data suitable for nuclear calculations see J. A. Cox, et. al., ORR Operations for Period April 1960 to April 1961, ORNL-TM-10, p. 32.

3.2b. Shim Rods

References: D-24110, D-24111, D-24113, D-24114, D-24115, C-24116, C-24117, C-24118, C-24119, D-24112

The fuel-Cd shim rods used at the ORR are 14-plate assemblies equipped with an upper section (containing a jacketed cadmium insert), a lower section, and a piston section, Figure 3.3.

Selected reference dimensions for ORR shim rods are given in Table 3.3.

Selected reference weights for ORR shim rods (including only the section defined by the length of the fuel plates) are given in Table 3.4.

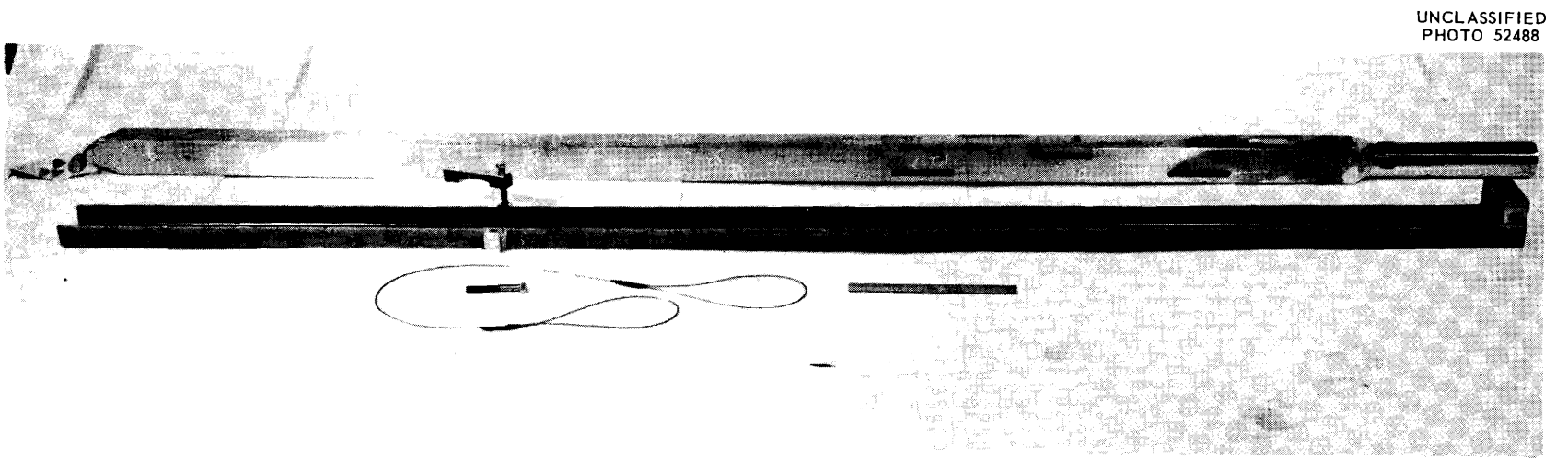

Fig. 3.3. ORR Shim Rod and Carrier

Table 3.3. Selected Reference Dimensions for ORR Shim Rods

Unit	Nominal Dimension
Shim rod assembly	
Length	117 11/16 in.
Width (through side plates)	2.838 in.
Width (℄ through heel and toe plates)	3.029 in.
℄ cadmium to ℄ fuel	~29 1/4 in.
Bottom of cadmium to top of fuel	~2 in.
Upper section, jacketed cadmium insert	
Length (overall)	30 3/4 in.
Length (cadmium)	30 1/2 in.
Outside dimensions (width)	2.345 in. square
Insert thickness	0.080 in.
Cadmium thickness	0.040 in.
Jacket thickness	0.020 in.
14-plate fuel section	
Plate spacing	0.117 in. (typical
Thickness (overall)	0.060 in.
Length (overall)	24 5/8 in.
Clad thickness	0.020 in.
Core (alloy) thickness	0.020 in.
Core (alloy) length	23 5/8 in.

Table 3.4. Selected Reference Weights for ORR Shim Rods

Description of Components		Nominal Weight (kg)
Fourteen fuel plates		2.61
Alloy cores (17 wt % U, balance Al)	0.83	
Cladding (Al)	1.78	
	2.61	
Heel and toe plates (Al)		1.50
Two side plates (Al)		1.14
Two combs (Al)		0.01
		5.26

3.3. Accountability and Records

3.3a. Introduction

Three separate records are maintained on each fuel unit (fuel element or shim rod).

1. Fuel-accountability ledger books are maintained with individual, fuel-unit, ledger sheets filed in sections according to unit location (i.e., core, vault, or pool); these sheets contain the past and current inventory of total uranium, U^{235}, and U^{236}. Each section of the ledger has a master control sheet showing the total inventory of uranium and U^{235} in that location.
2. A fuel inventory card file is also maintained. A card for each fuel unit shows the past and current U^{235} inventory and is filed in sections according to location (i.e., pool or core). These two sections are divided into sub-sections according to the U^{235} inventory (e.g., all units containing 180 to 190 gm of U^{235} would comprise one sub-section).
3. Tags bearing individual unit-identity numbers are kept on location-indication boards which graphically display the core, pool storage racks, etc.

Additional records may be maintained for operations convenience.

3.3b. Accountability--General

Accountability records are maintained by the ORR Sub-Balance Area Representative under the supervision of the Balance Area Representative for Code No. 20 (Balance Area for Reactor Operations Department, Operations Division). The ORNL Accountability Office is Code No. 1.

Accountability records are maintained in the following manner:

1. At the end of each month the current inventory of uranium and U^{235} are compiled and reported to the Balance Area Representative, who in turn forwards this information to the ORNL Accountability Office. Form X-333 (Rev. 1-56), Example 3.1. is used.
2. For transfers between Balance Areas or Sub-Balance Areas, Form UCN-2681 (Rev. 2-61) in triplicate is used. See Example 3.2. (An exception to this procedure is that, although the ORR pool and core are in the same sub-balance area as the ORR vault, this form is required for transfers from the vault to these locations.)
3. For transfers within the ORR Sub-Balance Area the form TX-2159 (Rev. 1-62), Example 3.3., is used (except as noted above). The form is filled in by the shift engineer in charge of the actual transfer and sent to the Sub-Balance Area Representative. Information required for each unit is:
   a. Source; former location of unit
   b. Unit number; fuel element, shim rod, or fission chamber identity number
   c. Receiver; new location
   d. Remarks; additional information as may be requested such as condition of element, radiation level external to shipping casks, etc.

3.3c. Methods Used for Accountability

Normally, U^{235} consumption by neutron absorption is not considered for small items (e.g., fission chambers, foils, etc.). Fuel element and shim rod consumption by neutron absorption is calculated both due to

X-333 (Rev. 1-56)

X-333- 21033

SS MATERIALS INVENTORY AND CALCULATIONS SHEET FOR ( ) DEPLETED U ( ) ENRICHED U ( ) U^{233}

( ) NORMAL U ( ) THORIUM ( ) PLUTONIUM

(List only one material type to a sheet)

DATE OF INVENTORY _____ 19 ___

MONTH OF _____ 19____

BALANCE AREA _____ CODE NO. _____ PHONE NO. _____ DATE OF INVENTORY _____

Col. No.	1	2		3	4	5	6	7	8	9	10	11	12
	(a) Chemical or Physical Form	(b) Irradiated		(c) Net Weight (g)	(d) No. of Items	% SS to Net Weight	(e) Inventory Method	g/g or mg/ml	SS Net Weight (g)	(f) % U^{233} or U^{235}	(f) U^{233} or U^{235} Weight (g)	(f) Limits of Recognized Uncertainty	
		Y	N									SS Net	U^{233} or U^{235}
MATERIAL IN PROCESS													
MATERIAL IN RESEARCH AND DEVELOPMENT — In Active Use													
MATERIAL IN RESEARCH AND DEVELOPMENT — Not In Active Use													
PRODUCT													
AWAITING RECOVERY													
TOTAL INVENTORY													
INVENTORY DIFFERENCES (Explain all gains, losses, spills, etc.)													

(a) Subdivide by chemical formula, metal slugs, etc.

(b) If irradiated check (X) in column captioned "Y," if not check "N."

(c) Show weight of solution, compound, alloy, metal, etc.

(d) Show number of pieces, number of bottles, number of assemblies, number of rigs, etc.

(e) Show method of analysis and analytical report data sheet number. When weighed, show type of scale or balance.

(f) Columns ·ered 9, 10, and 12 are NOT applicable to normal uranium, thorium, or pluto·

Example 3.1.

EXPLANATION OF DIFFERENCES: _____

1. Are all containers properly labeled as to: (a) Material type? Yes _____ No _____ (b) Drum, box, bottle, or container number? Yes _____ No _____ (c) Gross, tare, and net weights? Yes _____ No _____ (d) SS net weight and % U^{233} or U^{235}? Yes _____ No _____ (e) Analytical data expressed in g/g or mg/ml? Yes _____ No _____ (f) Date analyzed and analytical data report number? Yes _____ No _____

   If any of above are NO, explain why _____

2. Are laboratory reports and weighing data on file to support measurement data reflected in the inventory method on reverse side and also in item 1 above? Yes _____ No _____

3. Can items in inventory be traced through the records to this material balance report? Yes _____ No _____ . If NO, why? _____

4. Does each individual possessing SS materials have an itemized listing of all materials in his possession? Yes _____ No _____ . If NO, why? _____

5. Describe exact method of inventory if measurements other than analysis, weight, or volume measurements were used. Explain why more precise methods were not used _____

6. On irradiated materials which may not be amenable to measurements, are up to date records of material quantities, container or bin number and storage facility layouts available? Yes _____ No _____ . If NO, why? _____

   When will these materials be measured? _____

Inventoried by _____
(Signature Required)

Inventory Attested:

_____
(SIGNATURE OF SUPERVISOR REQUIRED)

Example 3.1. (continued)

OAK RIDGE NATIONAL LABORATORY
SOURCE, NUCLEAR, AND SPECIAL MATERIALS TRANSFER
(Intra-Laboratory Only)

TYPE OF MATERIAL

- ☐ NORMAL URANIUM
- ☐ DEPLETED URANIUM
- ☐ ENRICHED URANIUM
- ☐ URANIUM-233
- ☐ SPECIAL MATERIAL - SPECIFY -
- ☐ THORIUM
- ☐ PLUTONIUM
- ☐ TRITIUM
- ☐ DEUTERIUM

TRANSFER NUMBER
SNM-
2920

FROM (BALANCE AREA)	CODE	TO (BALANCE AREA)	CODE
DATE		DATE	
SHIPPER'S SIGNATURE		RECEIVER'S SIGNATURE	

SHIPPER'S MEASUREMENT METHOD

RECEIVER'S MEASUREMENT METHOD

	ITEM 1	ITEM 2	ITEM 3	ITEM 4	ITEM 5	ITEM 6	FOR SS OFFICE USE
Chemical or Physical Form							Quota Number
Number of Pieces							
Batch or Lot Number							Jev Number
Container Number							
Analytical Report Number							
Analytical Results ( ) g/g or ( ) mg/ml							TOTALS
\ ıe in Liters							
Gross Weight of Container & Material							
Tare Weight of Container							
Net Weight of Material							
Net Weight of SS Material (g)							
Per Cent Fissile Material to SS Net							
Net Weight of U^{235} (g)							
Net Weight of U^{233} ( ) Pu ( )							
Limits of Recognized Uncertainty — SS Net							
Limits of Recognized Uncertainty — "23" or "25"							

NOTE: Shipper-receiver differences must be reported to the SS Accountability Office immediately for reconciliation.

IF MATERIAL WAS NOT MEASURED BY EITHER SHIPPER OR RECEIVER STATE WHY

OTHER PERTINENT COMMENTS

Distribution: (White) Accountability Office - (Canary) Receiver - (Pink) Shipper

UCN-2681
(3 2-61)

Example 3.2.

TRANSFER MEMO

From _____ Date _____

To _____ Shift _____

SOURCE	UNIT NO.	RECEIVER	REMARKS

TX-2159
(1/62)

Example 3.3.

fission (burnup) and due to neutron capture (forming U^{236}). The actual calculations are performed using a digital computer and the information is posted by hand.

Following any partial or complete reloading of the reactor the number of Mwh accumulated during the preceeding period of reactor operations is obtained from the ORR log book. This information is programmed into the computer and the total grams of U^{235} fissioned for this period is calculated.

$$\text{Grams } U^{235} \text{ fissioned} = (\text{Mwh}/24) \times 1.07 \text{ gm } U^{235}/\text{Mw}\cdot\text{day}.$$

Since the consumption of U^{238} and U^{236} is negligible in ORR fuel units, the result is also the total grams of uranium consumed.

For each reactor position containing a fuel unit, neutron flux data (the ratio of the average flux in the position to the average flux in the core) and fuel inventory (total burnup, uranium, and U^{235} for the fuel unit at the beginning of the operating period) is programmed into the computer.

For each reactor core position the following information is programmed into the computer:

1. The ratio of the average thermal neutron flux in the fuel unit to the average thermal neutron flux in the core.
2. The identity number of the fuel unit as well as its total consumption of uranium, inventory of uranium and inventory of U^{235} at the start of the operating period.

The computer calculates the fraction of the total uranium consumption (burnup) to be assigned to the individual fuel unit. This fraction is called the burnup factor (BF), and is defined as:

$$BF = \left(\frac{\text{Average flux in fuel unit}}{\text{Average flux in core}} \times \frac{\text{U-235 in fuel unit}}{\text{U-235 in core}}\right)$$

Following this the computer multiplies these burnup factors by the previously calculated burnup and determines the burnup per element during the previous operating period. This current burnup is then substracted from the uranium content of the element at the start of the operating period to obtain the current uranium content; further, the computer adds this current burnup to the previous total burnup (consumption) of uranium to obtain a new total burnup. This current burnup is utilized by the computer to calculate the current production of U^{236}.

Grams U^{236} produced = (0.183 gms U^{236}/gm burnup) x (grams burnup)

The number thus obtained, plus the current burnup, is subtracted from the U^{235} content of the element at the start of the operating period to obtain the current U^{235} content. The computer also obtains the new total U^{236} production by introducing the new total burnup into the above equation.

Thus, when the results are obtained from the computer, the current burnup, new total burnup, uranium content U^{235} content, and U^{236} production are posted on the individual ledger book sheets for each fuel unit. Since the computer calculates the total consumption of U^{235}, in addition to the calculation of the uranium consumption, the master control sheet for the core can be posted and checked against the total uranium and U^{235} content of the individual fuel units.

It should be noted that numerous checks must be made by the Sub-Balance Area Representative to prevent accumulative-type errors. Additional records are maintained to indicate the uranium and U^{235} content of fuel units transferred from the core to the pool as well as those transferred from the pool and vault to the core.

3.4. Fuel Storage and Handling

3.4a. General Requirements--Fuel Storage

References: ORNL-CF58-9-40 "Critical Experiments with Arrays of ORR and BSF Fuel Elements".

Fuel storage is defined as the temporary retention of fissionable material outside of the reactor core. This material will normally be in the form of standard fuel units; however, fissionable material belonging to research groups may also be stored.

The methods of preventing and/or handling criticality hazards outside of the reactor core must be approved by the ORNL Criticality Review Committee. It is divisional policy that the design of fuel-unit storage racks and transfer casks be approved, in writing, by the chairman of that committee. Design of storage racks for ORR fuel is based on experimental evidence which indicates the following conclusions for $\sim$168 gm U^{235} cold, clean ORR-BSF fuel elements.

1. Optimum spacing is obtained with 0.2 in. between the locating bosses of adjacent elements.
2. A single, infinite row of vertical elements is probably subcritical if the distance between the locating bosses of adjacent elements is 1.5 in. or more.
3. If fuel elements are arranged in a uniform pattern, there is very little difference in the critical mass between 140- and 200-gm U^{235} elements.
4. An 11 x 12 matrix of $\sim$160-gm U^{235} elements showed no multiplication when closely packed with 0.020 in. of cadmium sheet separating the rows.
5. Apparently, two infinite rows of 168-gm U^{235} elements are subcritical.

Storage racks, with 30 positions each, for irradiated fuel elements are provided in the east and center pools, as shown in Figure 3.4. A storage rack, with 8 positions, for irradiated shim rods is provided in the center pool.

Fresh, unirradiated fuel is stored in the ORR vault located in the basement. This vault contains one approved unshielded wooden rack and an approved 60-element metal rack. The metal rack consists of two 30-element sections. Storage of beryllium pieces, heavy water, or ordinary water in this area is strictly forbidden.

Storage of fissionable material belonging to research groups is more flexible. Special problems associated with a particular experiment are brought to the attention of the ORR operating staff by the Technical Assistance Department, Operations Division. A special location may be provided for storage of experiments or the experiments may be suspended in the pool.

Care must be taken not to subvert criticality safety by suspending experiments containing fissionable material near standard storage racks; as a general rule, at least 12 in. of separation should be maintained.

3.4b. General Requirements--Fuel Handling

Fuel handling at the ORR is accomplished by transfer of an identified fuel unit from a specified location and placing it in another specified location without subverting criticality safety and with minimum radiation exposure to personnel. No fuel unit will be moved unless specified by a written order from the reactor supervisor or his designated alternate. Fuel handling is accomplished by the operating crew under the direct supervision of the shift engineer, and each fuel unit moved must be

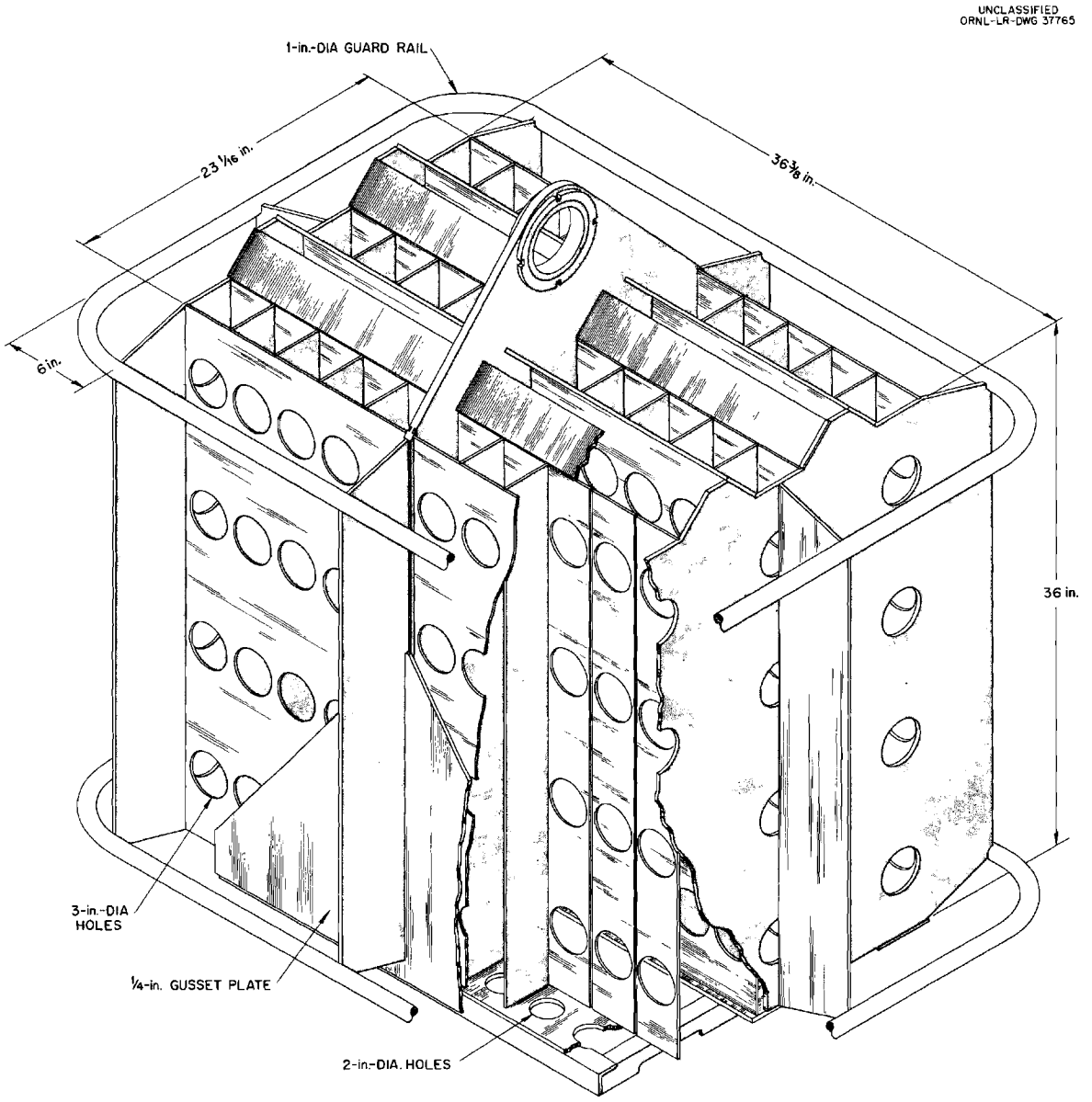

Fig. 3.4. ORR Fuel Element Storage Rack

identified. The shift engineer must personally verify the core or storage-rack position receiving each previously identified unit. This procedure will require the shift engineer's presence on the working bridge; therefore, identification of fuel units may be made by an operator, provided the proper identity number is unknown to him beforehand.

The shift engineer's responsibility as outlined above may be delegated to no one except the shift foreman. A shift engineer trainee in final stages of training may be delegated this responsibility if he is an acting shift engineer (i.e., with the incumbent serving in caretaker status). At the completion of fuel relocation a transfer memorandum is prepared by the person who supervised the transfer, see Example 3.3. The information on the transfer memorandum should also be recorded in the current ORR log book. The following precautions must be followed during fuel transfer.

1. To preclude a loss of identity during dual transfers, one fuel unit must be in its receiving core position (but not necessarily seated) before the second unit is lowered into the reactor tank.
2. Vertical movement of fuel units (except when in a shipping carrier) must be performed manually.
3. Health Physics coverage is required when removing a fuel unit shipping carrier from the pool. A crew member or supervisor may monitor the radiation level during fuel transfers in the pool or core.
4. Fuel units must be handled with tools specifically designed for this work. Hooks without guards to prevent the hook from hitting the fuel plates will not be used.
5. Prior to fuel transfers the second level balcony should be zoned off using the chains and signs provided. Personnel should be

excluded from this area unless permitted by Health Physics following a survey of the radiation levels.

3.4c. Removal and Insertion of Fuel Elements in the Core

References: D-24078 and D-24326

The various operations involving the removal and insertion of fuel elements in the ORR core are as follows:

1. Removal of fuel from the core

   a. Insert the fuel-handling tool into the end box and pull up the locking mechanism on the tool. If the tool is properly aligned in the fuel element, the locking prongs will be pulled in, and the tool will drop down further into the end box (~1 in.). This movement can be felt by the operator on the bridge. Release the locking mechanism and the prongs will engage the holes in the end box. Before removal of the initial element from the core, mark the tool shaft to determine the seat position of the fuel element in the core.

   b. Apply an upward pressure to the tool and the element should release from the lower grid.

   c. Raise the element ~6 in. from seat and move it up and down to assure that the tool is firmly engaged. Reseat the element and check the mark made in step 1a. (This applies to the initial element moved.)

   d. Remove the element from the core, and identify it as the proper one listed on the reloading schedule.

   e. Transfer the element to its proper location, and disengage the tool by lifting the locking mechanism, then the entire tool from the element.

2. Insertion of fuel into the core

   a. Consult the reloading schedule as to the proper location of the desired element.

   b. Engage and lock the fuel element to the fuel-handling tool; lift the element for identification.

   c. Upon proper identification, the element is moved to the core and inserted into the proper location. If, during the insertion of an element, abnormal deviations of the count rate are indicated (by the poolside, audible indicator of fission chamber counting rate), the element should be immediately removed from the core. An evaluation is then made to determine the cause of the deviation.

   d. Seat the element and check the seat position by referring to the mark on the fuel-handling-tool shaft.

   e. Unlock the tool and remove from the element.

The above procedure assumes that the equipment to be used has been checked and found to be in proper working order and that the hold-down arms have been raised.

3.4d. Removal and Insertion of Shim Rods

The various operations involving the removal and insertion of shim rods in the core are as follows:

1. Locking and unlocking the rods

   a. Before the shim rod can be removed, it must be unlocked from its drive. Before a rod is unlocked, a seat light should be showing and the drive should be slightly raised from the lower end of its travel (i.e., the three cocking pins off the studs).

Magnet current must be off. The actual unlocking is done in the subpile room.

b. At the bottom of the grey housing on each drive is a handle; at the end is a plunger. Pull out the plunger. With the plunger held out, turn the drive tube clockwise a small amount. The plunger should not go back in if it is then released. Continue to turn the drive tube clockwise until the plunger falls back into a slot. The rod is now unlocked. Reversal of this technique will lock the rod.

c. It is always best to establish communication, using sound-powered phones, between the bridge and the subpile room. Send an operator to the subpile room to unlock the drive. If this usual method fails to unlock the unit the operator should slowly rotate the locking handle of the drive, while the operator on the bridge lifts and lowers the rod. The rod will become unlocked when the drive has been rotated to the proper position.

2. Tool descriptions

a. Shim rod winch

This handling device, Figure 3.5., is used for all normal shim rod movements, excluding those related to the underwater saw operations. It consists of a hand-operated winch equipped with a safety hook which can be remotely operated. A typical series of operating movements utilizing this tool is given below.

UNCLASSIFIED
PHOTO 52491

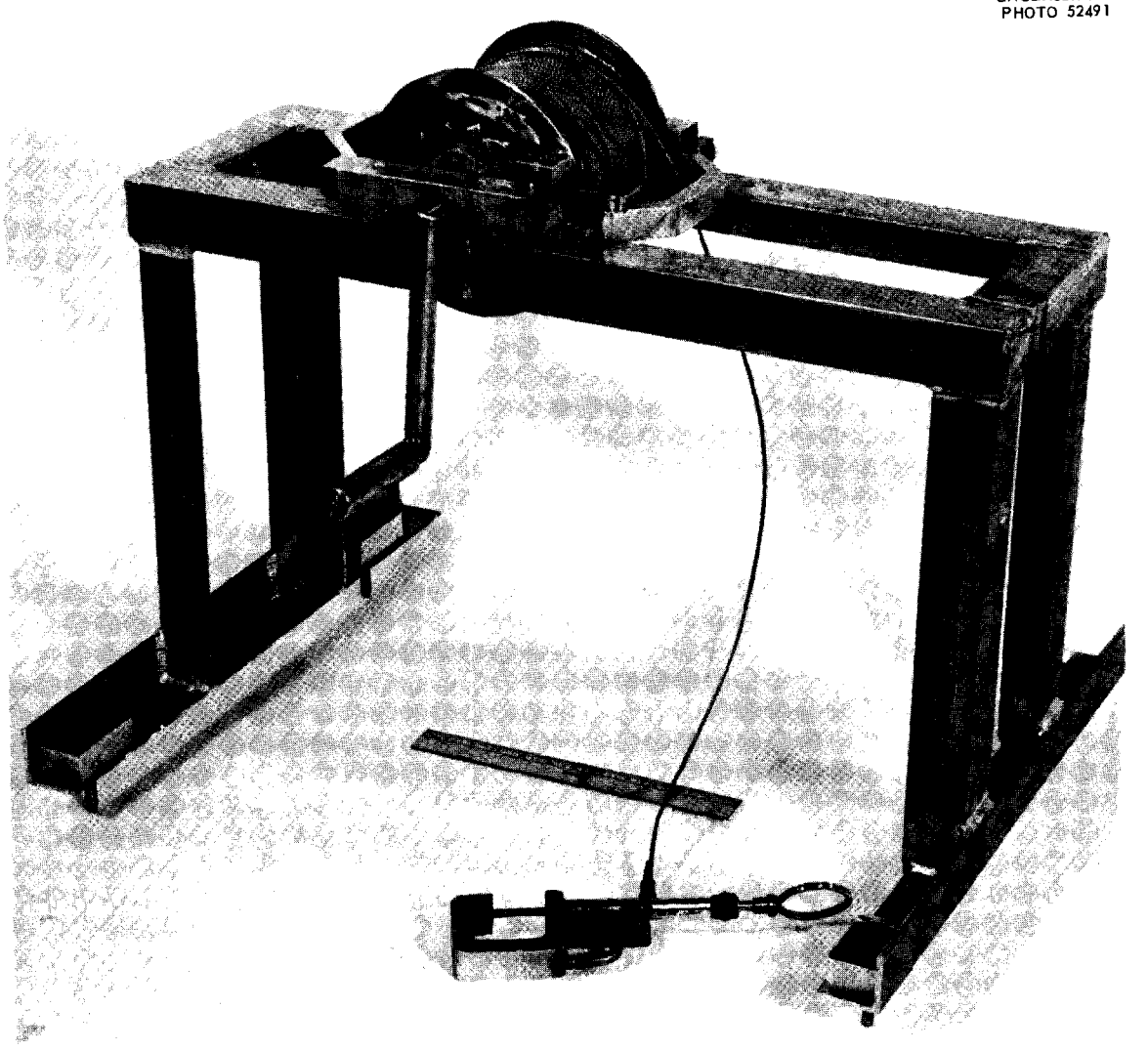

Fig. 3.5. ORR Shim-Rod Transfer Winch and Hook

1) Mount the winch on the bridge, spanning the "T" slot where guide holes are drilled for the alignment pins on the base of the winch. This positions the wire cable directly over the shim rod.

2) Lock the spring loaded safety pin of the hook in the open position by lifting fully and rotating clockwise approximately 15°.

3) Lower the hook with the winch and engage the lifting bar of the shim rod.

4) Close the safety pin remotely by lifting it and rotating approximately 15° counterclockwise. The spring will lower the pin to the locked position.

5) Raise the rod with the winch, being careful to maintain vertical alignment.

The "T" slot is preferred since the necessary tools can be more conveniently used. Operation of the locking pin is accomplished by use of the standard fuel element hook, by a special tool attached to the end of the fuel hook shaft, or by a short hook (to release a rod placed in pool storage). Maneuvering of the hook underwater is easier when the standard fuel hook is engaged in the small eye on back of the safety hook.

b. Original shim rod tool

This shim rod tool has a pair of fingers on its working end. These fingers open to slip over the handle of the shim rod. When the fingers are closed, they grip the handle and allow the shim rod to be lifted. At the upper end of the tool is a

crank for opening and closing the fingers. The tool has a float; nevertheless, it is quite heavy and should be handled in the pool with caution. This tool is now used only if the shim rod winch is not in working order.

c. Shim rod carrier

The new shim rod carrier, Figure 3.3, is used for additional stiffening of the unirradiated shim rod in transport, and to prevent damage in handling due to droppage or bending. The carrier, essentially, is a piece of 3 in. aluminum channel with brackets at either end to hold the rod on the channel. The rod must be placed with the concave side next to the carrier.

3. Procedures

a. Insertion of unirradiated rod

The unirradiated rod must be brought from the rolling mill to poolside in the small aluminum carrier. The locking hook of the winch is engaged on the rod and a special wire choker is threaded through the shim rod handle and attached to the small crane hook. The rod is lifted by the crane and allowed to hang vertically while the carrier device is removed. The rod is then raised, moved over the pool, lowered into the water, and moved until the winch can support the rod. The choker is then removed. The bridge is then moved over the empty core position and the rod lowered in position. The shim rod drive will normally be raised ~1.0 in. and in the unlocked position. After the rod has seated, the drive is locked. (Sec. 3.4d-1) It is then checked for locking by lifting the rod until it is

stopped by the rod-locking device. The hook is unlocked and removed by catching the eye on back of the hook and working the hook out of the rod handle. An irradiated shim rod is inserted in the same manner, except there is no carrier device, and the rod must not be removed from the pool. A rod which has been placed in the core must be locked and tested by the same crew that inserted it.

A check list for shim rod insertion is shown in Example 3.4. Completion of this form is required for each rod insertion.

b. Removal of irradiated rod

Removal of an irradiated rod is accomplished in the following manner: The 4 fuel elements immediately adjacent to the rod are removed to insure subcriticality with the rod raised or removed. The rod drive is unlocked. The winch is positioned above the rod and the hook is lowered, fixed to the rod, and locked. The rod is raised to sufficient height to clear the tank top (under Radiation Surveillance) and the bridge is moved west. As soon as the piston section of the rod clears the tank, the rod is lowered sufficiently to clear the gratings and minimize radiation exposure. Identification of the rod is made, and it is then placed in either the shim rod storage rack or a fuel element storage location. To place the rod in the rod storage rack, it is necessary to use a short hook and pull on the wire cable, from poolside, until the rod is over the storage location to lower it into the rack. A check list for shim rod removal is shown in Example 3.5. Completion of this form is required for each rod removal.

Shim Rod Insertion Check List

In preparation for this operation, make sure the necessary tools are checked and available, the balcony cleared and roped off, the procedure for rod transfer reviewed, etc. Shift engineers must closely supervise all parts of operation and initial at completion of operation.

___ 1. Assure that the 4 fuel elements (N, S, E, W) immediately adjacent to the rod have been removed, the rod drive is unlocked and near lower limit, the hold-down arms are raised.

___ 2. Place shim-rod winch on bridge, so cable will be directly over the future position of the rod.

3. (a) Applies to irradiated rods.

___ (1) Unlock safety hook and lower to rod. Engage in rod. Lock by lifting and turning latch eye counterclockwise.

___ (2) Under radiation surveillance raise the rod from storage location. Identify rod.

___ (3) Move bridge eastward. When near tank, raise rod under radiation surveillance enough to clear tank top. Immediately lower rod when above access flange until radiation subsides. Maximum reading _____ mr/hr.

(b) Applies to unirradiated rods.

___ (1) Assure that rod is secure in the carrier.

___ (2) Engage locking hook of winch on rod and thread the special wire choker through the shim rod. Attach choker to crane hook and lift unit to vertical position. Remove carrier.

___ (3) Raise rod, move over pool, and lower into water until winch supports the rod.

___ (4) Remove the wire choker.

___ 4. Position bridge so that rod is directly above the core position it will go in. Station a man to watch the count rate recorder while lowering rod.

___ 5. Engage a fuel hook in the eye on the back of the hook to keep the rod from twisting while entering lower grid. The rod must hang vertically.

Example 3.4.

___ 6. When the rod has entered the lower bearing properly, take the fuel hook off the safety hook. Continue lowering slowly until the rod is down and cable slacked. A seat light will show if drive was truly unlocked.

___ 7. Send an operator to subpile room to lock the drive by rotating the locking handle.

___ 8. The locking of the rod must be checked by lifting up gently on the rod with the winch. A small upward movement will indicate the rod is free to move between seat and cross, the rod is free and must yet be locked.

___ 9. An additional check can be made by raising the drive 5 inches and noting that the rod now can be raised some 5 inches also. Run drives back down, and assure that rod can no longer be raised.

___ 10. Unlock safety hook from rod and remove.

Other fuel or rod movements may now be made.

A ROD THAT IS REPLACED IN CORE MUST BE LOCKED AND CHECKED BY THE CREW PUTTING IT IN THE CORE.

Date _____ Engineer _____

Shift _____ Rods Moved and Checked _____

Example 3.4. (Continued)

Shim Rod Removal Check List

In preparation for this operation, the necessary tools should be checked, balcony cleared and roped off, the procedure for rod transfers reviewed, etc. Shift engineers must closely supervise all parts of operation and initial at completion of operation.

___ 1. Assure that all seat lights are showing, and that drives are near lower limit and drive unit is in locked position. Assure that magnet current is off. Seat switch actuating lever should be checked to assure that the shim rod is actually resting on the seat switch actuating rod.

___ 2. Raise both hold-down arms by catching bail of arm with a hook and tilting the arm east.

___ 3. Remove the 4 fuel elements immediately (N, S, E, W) adjacent to the rod or rods to be moved. (This insures subcriticality.)

___ 4. Position bridge above core, winch on bridge above rod, with cable directly over rod.

___ 5. Unlock safety hook and lower into tank. Engage fuel hook in round locking pin eye.

___ 6. Lower safety hook to rod and engage in rod handle. Lock hook by lifting safety pin eye slightly and rotating counterclockwise. Remove auxiliary fuel hook.

___ 7. Raise drives enough so that 3 reclutching prongs clear 3 studs. Unlock rod by rotating locking handle. Leave drive unlocked.

___ 8. Station a man to watch the count rate recorder. Raise rod slowly about 1 foot until sure rod is unlocked and free of the drive.

Example 3.5.

___ 9. Clear bridge and poolside of unnecessary people. Make certain bridge can be moved.

___ 10. Under radiation surveillance raise rod enough so that piston will clear top of tank. Move bridge west promptly, until rod can be lowered. Lower rod until radiation level tolerable. _____ maximum reading mr/hr.

___ 11. Identify rod.

___ 12. Move rod to storage location and place there.

___ 13. Unhook from rod and complete transfer memo.

A rod that is replaced in core must be locked and checked by the crew putting it in the core.

Date _____ Engineer _____

Shift _____ Rods Moved _____

Example 3.5. (Continued)

c. Placing rod on pool bottom for temporary storage

To place the rod on the pool bottom (during shutdowns when the center-pool water level is lowered for maintenance work), the shim rod winch is used. A hook is engaged in the piston end of the rod as close to center as possible for support. Simultaneously, the bridge is moved while lowering the rod, with the winch, to the desired location on the floor. The reverse procedure is used for picking up the rod. Care must be exercised that the rod does not rest on the bottom of the pool in such a fashion (i.e., top and bottom supported only) as to bend the rod.

d. Use of the shim rod tool

The eye on the tool is placed on the hook of the small bridge crane and the tool is lowered into the reactor tank. This is a two-man job. One man lowers the tool while the other positions it. When the tool is in position, the fingers are cranked open (if they are not already in that position); the tool is placed astraddle the shim rod handle. The fingers are cranked closed and withdrawal can begin. The shim rod is lifted manually and the slack is taken up with the crane. It cannot be too highly stressed that one <u>must not</u> pull a rod using the power crane. The weight of the tool and rod together makes use of a power crane tempting; but the power crane <u>must</u> not be used. Once the shim rod is free, it can be raised so that it clears the reactor top. Then the bridge may be moved and the shim rod placed in a storage rack.

e. Radiation exposure precautions

When the shim rod is in a position where its lower end clears the reactor top, its fuel section will be much closer to the surface than will that of a fuel element when it is removed from the core. This means the radiation background on the bridge will be higher than usual. Thus, one should get the rod over the storage position with all judicious speed.

3.4e. Sawing Fuel Elements and Shim Rods

References: Drawings E-20262, 3, 4, 5, 6, 7, 8, 9
E-29270, 1, 2, 3
E-29283, 4

Irradiated fuel elements and shim rods from the ORR, which contain fission products and U^{235}, are shipped to another site for reprocessing. To reduce the volume of shielding required for these shipments, the end boxes are sawed from the fuel elements, and the fuel section is cut out of the shim rods. A motorized underwater saw complete with a purge system is used for these operations.

The ORR Supervisor or his designated alternate issues written instructions listing the numbers and positions of fuel elements and shim rods to be cut. Each piece must be positively identified. The Shift Engineer or Foreman must check the position of the piece in the saw (as described in this procedure) before the cut is started. An operator must remain in attendance at the saw controls while the cut is in progress.

The greatest hazard in this operation is the possibility of breaking or cutting of the fuel cladding with the subsequent release of fission products. Strict adherence to this procedure will minimize this hazard.

Routine procedures for handling fuel in the pool should be followed to prevent radiation exposures.

The equipment provided is as follows:

1. Underwater saw

   The saw consists of a standard heavy-duty hacksaw blade attached to a rigid, vertical shaft (14 ft.-6 in. long) which extends about 2 feet above the surface of the pool water. A gear box with a crank and cam arrangement converts the rotary motion of an electric motor to reciprocating movement of the vertical shaft. Horizontal movement of the blade is provided by a hydraulic piston attached near the top of a guide tube around the reciprocating shaft.

   The fuel element or shim rod to be cut is held in place by two hydraulically operated clamps. The portion to be cut off projects into an adjacent collection box. A plexiglass top on this box provides visability inside and restricts the open area to that through which the unit being sawed projects. A pump exhausts this collection box and thus insures a positive in-flow around the cut. Effluent water from the collection box passes through an underwater filter, a rotometer at the side of the pool, and, finally, to the hot drain system.

2. Tools

   The following tools are used to handle shim rods and fuel elements before and after they are cut and also to position them in the saw assembly for cutting:

a. A V-groove trough which is located on the grating in the ORR center pool. Elements to be sawed are placed in this trough which positions them for handling with the fuel-element grabber.

b. A fuel-element grabber which has short pieces of angle for jaws. It is clamped to the middle of an element in the V-groove trough.

c. A pincer-like tool which is used to grasp sawed elements by the flat sides. Elements, while in the horizontal position, are grasped (near the end) with this tool for insertion into the vertical storage rack.

d. A circular storage rack with space for the fuel sections from seven fuel elements or shim rods. Elements are stored in the vertical position.

e. A hook with safety closure, similar to the shim-rod winch hook, mounted on a short shaft. It is used to transfer and position shim rods.

f. A short, flat hook used to engage slots in shim rods for positioning and transfer of sawed pieces.

g. A fuel-element saw guide consisting of a slotted piece of aluminum angle with an end cap. When the end cap is held against an end box, the slot indicates the proper location of the cut.

h. A shim-rod saw guide consisting of an aluminum strip with two arrows. One end of the strip contains a stud. When this stud is fitted into a cadmium-holder hole near the

top of the shim rod, the arrows indicate the proper location of the cuts.

The procedure for sawing fuel elements is as follows:

1. Positioning the element in the saw assembly:

   a. Remove the designated element from its storage position and identify. WARNING: Clear the balcony if the element is to be moved near the thimbles.

   b. Place the element in the V-groove trough with the convex side up. Use a long fuel-element hook.

   c. Clamp the fuel-element-grabber near the center of the element and transfer to the saw assembly.

   d. Place the element in the saw holder at the approximate correct position for sawing.

   e. Fit the fuel-element saw-guide end cap over the west end box of the element. Reposition the element, if necessary, so that the saw blade is lined up with slot in the saw guide.

   f. Remove the fuel-element saw guide.

   g. Clamp the element in place with the hydraulic clamps. Move the vice-clamp valve, located on the underwater saw control station, to the north of "Ex" position.

      NOTE: Approximately 50 psi water pressure, as indicated by the gauge at the control station, is required for proper saw operation. Pressure can be increased by reducing the cooling water flow to the auxiliary shell-tube cooler at the LITR, if possible without adversely affecting LITR operation.

2. Establishing exhaust water flow from the collection box:

   a. Notify the tank-farm operators that approximately 150 gallons of water will be dumped into the hot drain system for each element to be sawed.

   b. Make sure the plexiglass top of the collection box is in the closed position.

   c. Start the underwater pump by pressing the "start" button located on the south wall of the pool.

   d. Open the purge line valve, located about 6 feet under water at the south side of the pool, until 8 to 10 gpm flow is observed on the rotometer at the south pool wall. This valve is equipped with an extension handle.

   e. Place the G-M tube from the poolside background monitor near the rotometer. This will give a warning if excessive activity is present in the purge water.

3. Sawing the element:

   a. Start the underwater saw by pressing the "start" button located at the control station.

   b. Start the cut by moving the saw feed valve to the east or "cyl" position. A final visual check should be made to make sure the element has not shifted.

      WARNING: Should the poolside background monitor alarm, the saw should be stopped and the location of the cut checked carefully.

   c. When the end box falls into the collection box, the saw should be stopped, the blade retracted, and the pump stopped.

d. Release the hydraulic clamps and reverse the element (the clamping tool should still be attached to the element) to saw off the remaining end box.

e. Position the element as in steps 1d. through 1g.

f. Establish purge water flow, and saw the end box as in steps 2d. through 2e. and 3d. through 3f.

4. Storing the sawed element

a. Release the hydraulic clamps, and move the element to the grating.

b. Place the element on the grating with the convex side up and release from the clamping tool.

c. Grasp the element about one inch from the end in the center of the flat sides with the pincer tool. Raise the tool and the element should hang vertically.

d. Place the element in the circular storage rack. Record the position.

e. If no more elements are to be sawed, close the purge and supply water lines to the saw assembly, and replace the G-M tube of the pool background monitor.

The procedure for sawing shim rods is as follows:

1. Position the shim rod in the saw assembly.

a. Remove the designated shim rod from its storage position and identify. Use the shim-rod hook.

WARNING: Clear the balcony if the shim rod will be moved near the thimbles.

b. Move the shim rod near the saw assembly, and engage the flat hook in one of the lower slots on the convex side. Raise the hook to make the shim rod horizontal.

c. Place the shim rod in the V-groove trough of the saw guiding the piston end into the collection box with the flat hook.

d. Position the rod in the approximate correct location, and remove the flat hook. The shim-rod hook remains attached.

e. Place the stud of the shim-rod saw guide in a cadmium-holder hole near the top of the shim rod. Reposition the shim rod, if necessary, so that the west arrow is in line with the saw blade.

f. Remove the shim-rod saw guide and clamp the shim rod in place with the hydraulic clamps.

2. Establish exhaust water flow from the collection box (the procedure is the same as that for sawing fuel elements).

3. Make the first shim-rod cut.

a. Start the saw and make the first cut (the procedure is the same as that for sawing fuel elements).

b. Release the hydraulic clamps.

4. Position the shim rod for the second cut.

a. Engage the flat hook in one of the upper slots of the shim rod and slide the rod west to approximately the correct location for the second cut.

b. Place the stud of the shim-rod saw guide in a cadmium-holder hole near the top of the shim rod. Reposition the

shim rod, if necessary, so that the east arrow is in line with the saw blade (the west arrow should line up at the cut end of the rod).

c. Remove the shim-rod saw guide, and clamp the shim rod in place with the hydraulic clamps.

5. Make the second shim-rod cut as in step 3a.

6. Store the cut shim-rod sections.

a. Remove the cadmium section, which should still be attached to the shim-rod holder, from the saw and place it horizontally on the grating. Remove the shim-rod holder.

b. Open the plexiglass top of the collection box by pulling up the string attached to the handle.

c. Pick the piston section of the shim rod out of the collection box by engaging the flat hook in one of its slots. Store it on the grating beside the cadmium section.

d. Reposition the fuel-element section in the collection box, if necessary, then grasp it about one inch from the end in the center of the flat sides with the pincer tool. Raise the tool, and the fuel section should hang vertically.

e. Transfer the fuel-element section to the circular storage rack. Record the position.

f. Close the plexiglass top of the collection box.

g. If no more units are to be sawed, close the purge and supply water lines to the saw assembly and replace the G-M tube of the pool background monitor.

3.4f. Shipping Fuel Units to the Fuel Recovery Plant

References: E-14432 (carrier OD-1), E-14433 (carrier OD-1), D-37780 (carrier OD-2), D-42786 (handling hook), D-42787 (handling hook)

A "typical" fuel element will, after about two weeks of operation in the ORR, be transferred to the racks for storage. Subsequently, it will be reinserted in the core four to eight times, progressing to more central positions. When an element containing about 135 gm of U^{235} is removed from the core, the element is considered fully depleted and is stored for shipment to the fuel recovery plant. The final fuel content, however, depends upon the content at the time of final insertion and the length of that particular operating period. Although elements with content as low as 109 gm of U^{235} (45% burnup) have been removed from the reactor, a 125 - gm (37% burnup) content is typical.

A "typical" shim rod is transferred directly from the ORNL vaults to the ORR core where new shim rods are inserted in core positions D-4 and D-6 on a bimonthly basis (during the week-long shutdown ending an operating cycle). This provides a new rod in core position D-6 which contains maximum reactivity for use by the servo-control system. During the next succeeding end-of-cycle shutdown, the shim-rod fuel content is about 80 to 100 gm of U^{235}. Transfer is then made from core position D-4 to B-4 and from core position D-6 to B-6 for further depletion during a second operating cycle. After the latter operating cycle, the fuel content is 60 to 70 gm U^{235}; and the shim rod is transferred to the shim-rod storage rack for decay.

Fully depleted shim rods and fuel elements are allowed to decay for about 90 days. The gamma-heat generation in an ORR fuel element after

90-days decay is about 180w (calculated on the basis of data from J. F. Perkins and R. W. King, Nuclear Science and Engineering, 3 726-746, (1958).). Actual temperature measurements made on a carrier about 24 hours after loading with seven depleted ORR fuel elements indicated no significant temperature differential across the carrier shielding (the temperatures were about 131°F).

Following this decay period, all portions extraneous to the fuel assemblies are removed by use of the remotely operated, underwater saw. Two 7-place, shielded carriers (designated OD-1 and OD-2), Figure 3.6., are loaded with fuel assemblies and shipped to the fuel recovery plant on a monthly basis.

Each shipping carrier, for ORR (and LITR) fuel units, consists of a cylindrical shaped basket 27 1/2 in. long with seven 3 3/16-in. by 3 7/16-in. cavities, each cavity designed to hold one fuel assembly. Surrounding the basket is a lead-filled, stainless steel shield 8 7/8 in. thick. The carrier has a rectangular shaped base with two trunnion-type lifting points; the plug-type top also has a lifting point. An "A"-frame-type lifting assembly with wire-rope slings and shackles is used to lift the carrier during the loading operation; a manually operated chain hoist, also attached to the lifting assembly, is used to remove the carrier top. (The weight of the carriers, about 15,000 lbs, dictates that the carrier must not rest on the pool floor during the loading operation.)

Prior to the loading operation, a dam should be installed between the reactor and center pools. This isolates the reactor pool and provides protection in the event the carrier is inadvertently dropped or bumped into the center pool liner, causing a loss of water. The carrier should

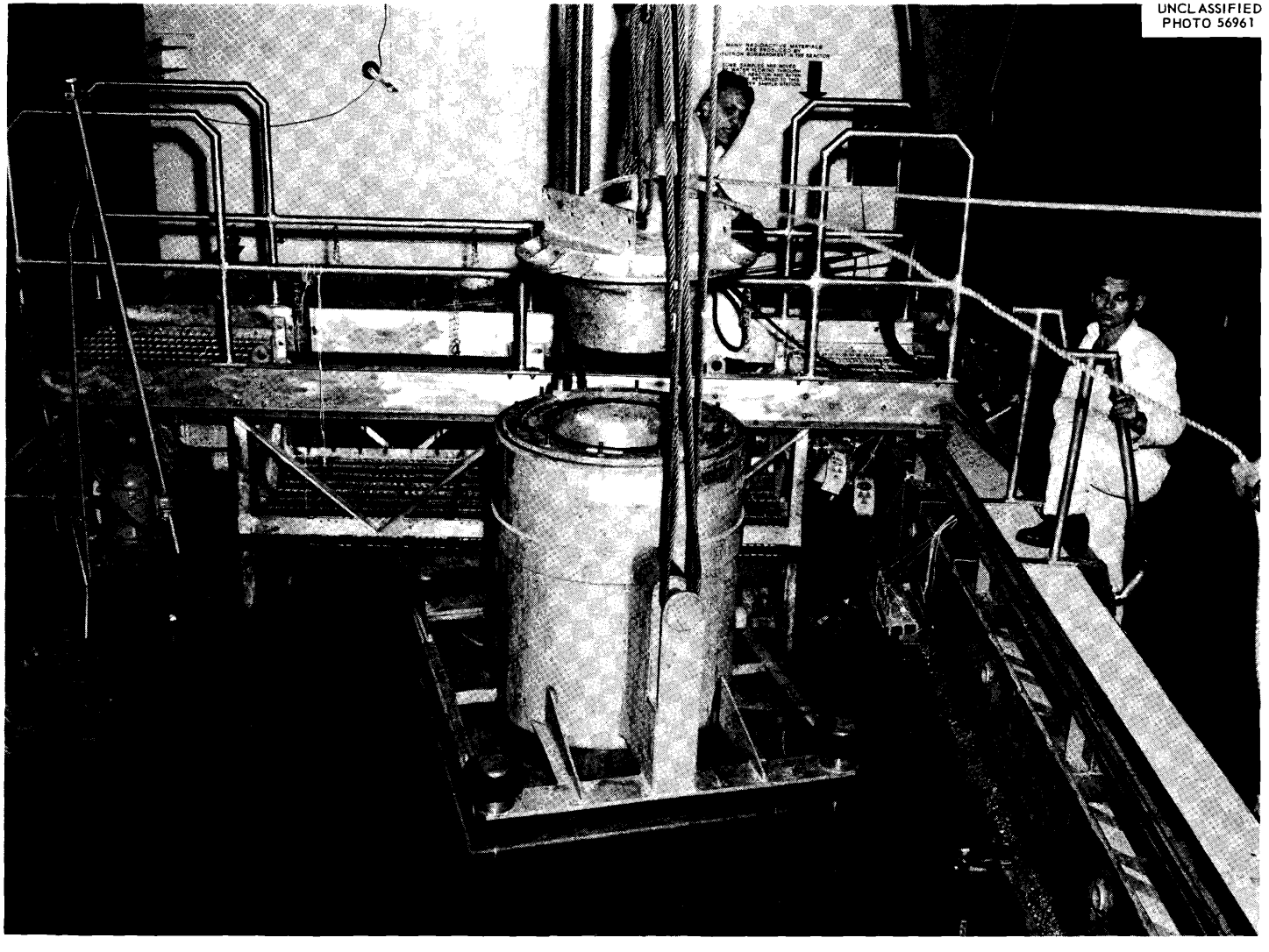

Fig. 3.6. Fuel Carrier on Handling Assembly

never be positioned over or near the reactor pool.

The procedure for handling the carriers prior to, during, and following the loading operation is as follows:

1. Transfer the carrier from the truck to the 2nd-level-west contamination zone using the 20-ton building crane.
2. Inspect the carrier for any damage which may have occurred during shipment. If it should be necessary to remove the plug-type top during this inspection, a health physicist must be present.
3. Have a health physicist smear the carrier for contamination. If it is contaminated, ($>$1000 dpm/100 cm^2 of β-γ or $>$30 dpm/100 cm^2 of alpha contamination) it must be cleaned before being lowered into the pool.
4. Install the rubber bumpers on each of the four corner posts.
5. To insure that there are no leaks into the lead core of the carrier:
   a. Remove the cap and pipe plug from the "lead core drain" (located on the side of the carrier).
   b. Attach the pressure-test rig consisting of a regulator, valve, and air-pressure gauge.
   c. Using plant air supply, pressurize the lead core to 15 psi and close the valve. Do not exceed 15 psi. The pressure should not diminish during a 15-minute test period. (If leaks are indicated, contact the reactor supervisor for emergency handling instructions.)
   d. Remove the pressure-test rig and replace the pipe plug and cap.

6. If no leaks are indicated, carefully raise the carrier using the "A"-frame-type lifting assembly, position it over the center pool, and lower it into the water.
7. Remove the plug-type top and load seven fuel elements from the circular ("7 up") storage racks into the carrier. Identify each element by identity number and by location in the carrier.
8. Replace the top. The proper orientation of the top is indicated by two arrows (one on the top and one on the carrier).
9. With a health physicist present to monitor the radiation level, slowly raise the carrier out of the pool.
10. Replace and tighten the nuts which hold the top in place.
11. Remove the outside and inside caps from the cavity "top vent" and the cavity "bottom drain".
12. Discharge the water remaining in the cavity into the pool or a hot drain by introducing pressurized air through the "top vent". Water will discharge through the bottom drain. (This should be performed as soon as possible following the loading operation to prevent heating the trapped water and pressurizing the cavity.) Do not pressurize the cavity in excess of 5 psi. Replace the caps.
13. Rinse the carrier with demineralized water; dry the carrier by wiping it with rags.
14. Move the carrier to the 2nd-level-west contamination zone where it should be placed on clean blotter paper.
15. Have a health physicist smear the carrier. If the carrier is contaminated (by criteria stated in step 3), further cleaning is necessary before shipment can be made.

3.5. Refueling the ORR

3.5a. General Considerations in Refueling

As previously discussed, an operating cycle for the ORR consists of seven weeks of operation and approximately one-week, end-of-cycle shutdown. This seven weeks of operation is in turn divided into fuel cycles (i.e., periods of operation during which the fuel units in the core remain unchanged by transfer or rearrangement). Since the reactor must be shut down, on a fixed schedule, once every four weeks, to remove irradiated isotopes and to insert isotope target material, a maximum operating period of about three weeks is dictated following the beginning of an operating cycle (the actual period may be less depending on the length of the preceding end-of-cycle shutdown). However, the allowable excess reactivity is not sufficient to operate the reactor at 30 Mw for a period greater than ~18 days. Thus a "typical" operating cycle may consist of fuel cycles as shown in Table 3.5.

Table 3.5. Typical Operating Cycle for ORR

Fuel Cycle Designation*	Operating Period	Reason for Termination
a	~1 1/2 weeks	Refueling
b	~1 1/2 weeks	Mid-cycle shutdown (Isotope work and refueling)
c	~2 weeks	Refueling
d	~2 weeks	End-of-cycle shutdown

*This designation follows operating cycle number (e.g., cycle 42a).

Deviation from this "typical" operating cycle is due to unscheduled shutdowns caused by experiment difficulties, instrument malfunction, etc. Because of the buildup of xenon concentration after a reactor shutdown, reloading is required following many such shutdowns to minimize reactor downtime. Following operation of the ORR at 30 Mw, about 20-21 of the centrally located elements must be replaced by a mixture of new, unirradiated elements and partially depleted elements (which have remained out of the core a sufficient time for xenon decay). If an unscheduled shutdown, which results in a reloading, occurs within ~14-16 days before the mid-cycle (or end-of-cycle) shutdown, no additional reloading will normally be made until the mid-cycle (or end-of-cycle) shutdown.

The operating critera for the ORR stipulates that "the excess reactivity loading above clean-cold-critical will not exceed that which will permit achievement of criticality with the rods withdrawn less than 1/2 their reactivity worths". In actual practice, the group worth of the four fuel-cadmium shim rods as a function of position is assumed to be symmetrical about the midposition (calibration curves for individual rods indicate this assumption to be correct). Prior to the beginning of each operating cycle, the fully withdrawn position of each shim rod is determined; the average fully withdrawn position is then calculated. The operating limit is taken as one half of this average position.

3.5b. Scheduled Reloadings

Reference: ORNL TM-277, Fuel Cycles and Loading Programming for Water-Cooled Research Reactors, Colomb and Cavin.

The referenced report describes a method of determining suitable ORR core loadings by use of a digital computer. Core loadings are presently

determined by a hand calculation. This hand calculation involves the use of the computer-program principles, but the techniques have been simplified. In addition, the final selection of each fuel element for each particular core location is based on the experience and engineering judgement of the ORR supervisory staff.

In the following description of the principles involved in determining suitable ORR core loadings, the referenced report will be quoted extensively.

1. "Assume the reactor can be described by the very general formula

$$k_{eff} = P\,\overline{k_{\infty}}$$

where P is a nonleakage probability for the complete neutron spectrum and $\overline{k_{\infty}}$ the average k_{∞}'s of all the elements loaded into the core."

2. "k_{eff} could be computed from the measured position of the control rods at critical, from the fuel contents of the rod followers, and from the rod-position factors".

   a. The most desirable position of the control rods at critical with the reactor cold and xenon free is that defined by the <u>operating criteria for the ORR</u> (defined above in section 3.5a).

   b. "The effect of the fuel contained in the rod followers was measured by calibrating rods containing various fuel weights in their followers. These measurements were made in the same core location and with the same fuel distribution in the core." (The results of these measurements are shown in Figure 3.7.)

   c. "Rod-position factors were obtained by a comparison method consisting of keeping the reactor critical and compensating the reactivity controlled by one rod with that of another."

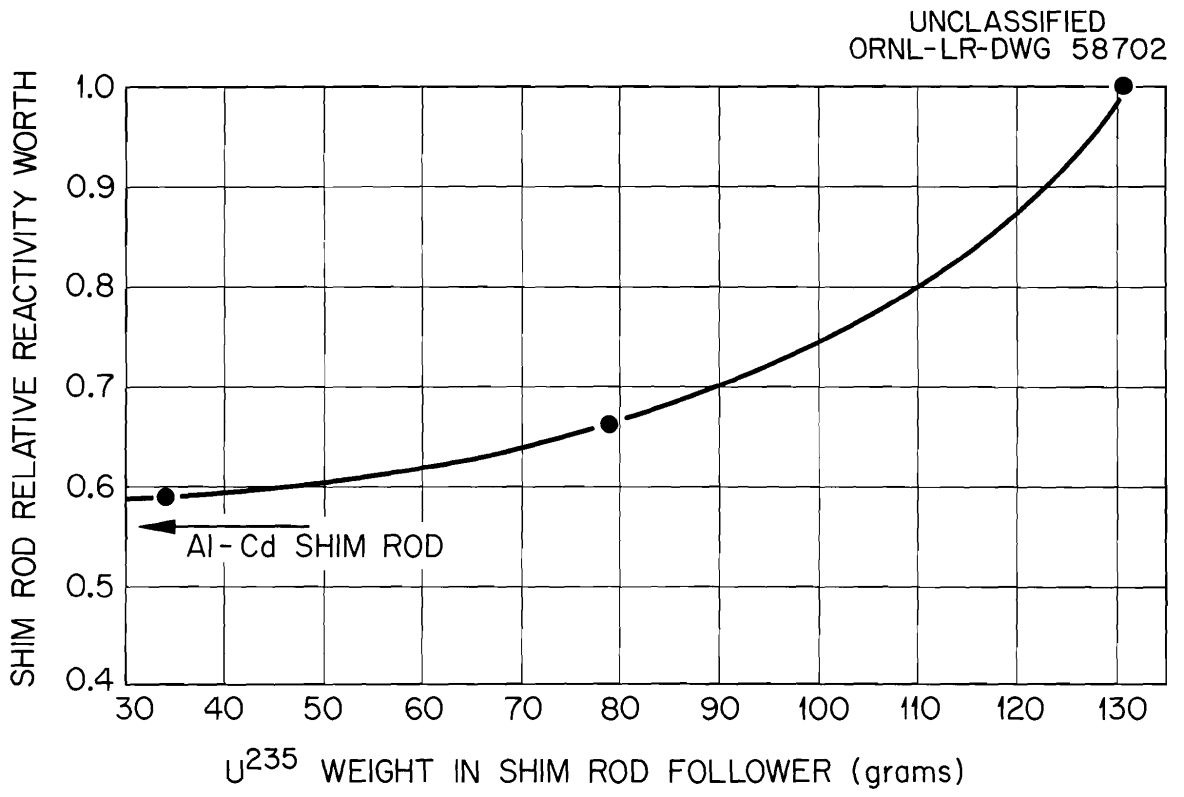

Fig. 3.7. Shim Rod Reactivity Worth as a Function of Follower U-235 Contents

3. In summary the procedure involves the determination of the total worth of the shim rods, dividing this value by two to obtain the allowable k_{eff}, and selecting a core loading with a $\overline{k_{\infty}}$ consistant with the above formula.

The procedure for calculating and selecting a suitable core loading is as follows:

1. The fuel content of each shim rod is determined. The relative reactivity worth, Ci, is obtained using the information presented in Figure 3.7.
2. Each shim-rod-position factor, Wi, is multiplied by Ci to obtain the total worth (% $\Delta k/k$) of that shim rod in its core position. (Personnel of the Development Department, Operations Division, calculate the shim-rod-position factors based upon the results of comparison measurements as described above. Following a significant change in core configuration, these factors are redetermined.)
3. The interaction (or shadow) factor, S, is calculated from a formula supplied by personnel of the Development Department, Operations Division. The product of this factor, S, and the sum of the individual shim-rod worths is the worth of the rods operated as a group. (The formula yielding S will depend upon the core configuration. Unlike the values of Wi, the formula yielding S cannot be immediately determined but must be obtained from a statistical analysis of a number of core loadings of a given configuration.)

4. The total, <u>allowable</u> excess reactivity is then determined:

$$\frac{\Delta k}{k}\% = \frac{S}{2} \sum_{i=1}^{4} Ci \times Wi$$

5. The <u>allowable</u> k_{eff} is then calculated:

$$k_{eff} = \frac{1}{1 - \frac{\Delta k}{k}}$$

6. The allowable k_{∞} is then calculated

$$k = \frac{k_{eff}}{P}$$

(P is defined above and is supplied by personnel of the Development Department, Operations Division; P must be obtained from a statistical analysis of a number of core loadings of a given configuration.)

7. An operating core loading is selected by the ORR supervisory staff. A k_{∞} for each fuel element is obtained (see Figure 3.8). The average k_{∞} for this loading should be approximately equal to that obtained in the previous step.

This method enables the ORR supervisory staff to check a selected core loading by a calculational method. The use of this method has greatly reduced the necessity of numerous critical runs to obtain a suitable core (i.e., a suitable core is usually obtained on the first attempt).

Reloading instructions are transmitted to the shift engineers on form UCN-2274 (Rev 3-62) as shown in Example 3.6. This form is used both for scheduled reloadings and for unscheduled reloadings (see Section 3.5c., Reloading to Remove Xenon Following an Unscheduled Shutdown).

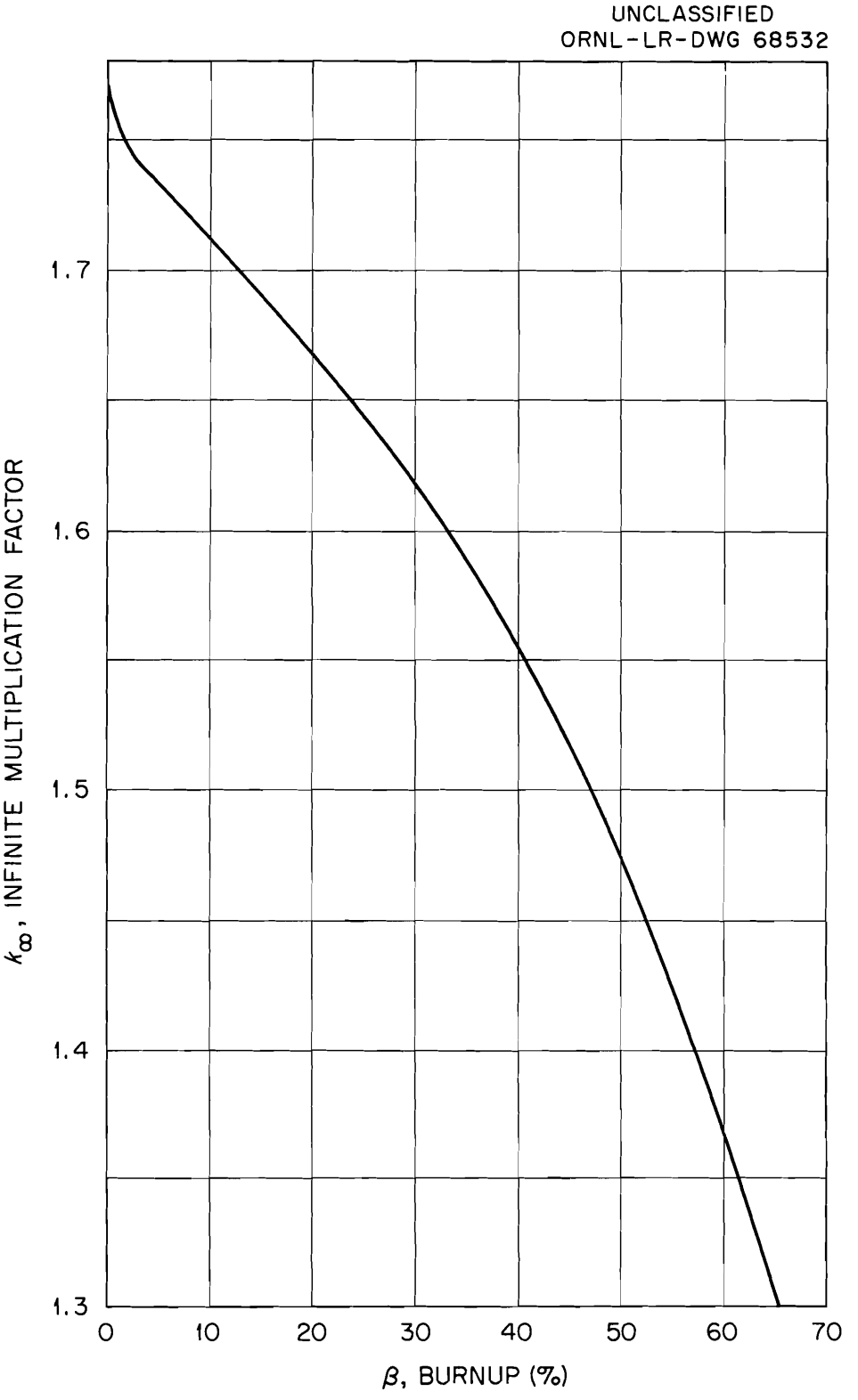

Fig. 3.8. Infinite Multiplication Factor, k_∞, as a Function of Burnup of Fuel Elements Originally Containing 200 gm of U-235

ORR REPLACEMENT LOADING

PURPOSE: ☐ SCHEDULED RELOADING ☐ UNSCHEDULED RELOADING

ENDING CYCLE

BEGINNING CYCLE

PREPARED BY

DATE	ELEMENTS REMOVED		CHANGE IN WEIGHT U^{235}	ELEMENTS INSERTED		
CORE POSITION	OR NUMBER	WEIGHT U^{235}		OR NUMBER	WEIGHT U^{235}	LOCATION
REMARKS:	SUBTOTAL					
	SHIM RODS					
	OTHER UNITS					
	TOTAL					

UCN-2274
(3 3-62)

DO NOT BOLT DOWN ORR ACCESS COVER UNTIL A CRITICALITY RUN HAS BEEN MADE

Example 3.6.

3.5c. Reloading to Remove Xenon Following an Unscheduled Shutdown

It was stated previously that written instructions from the reactor supervisor (or his designated alternate) are required before reloading is performed. This requirement is met even in the case of reloadings to remove xenon following an unscheduled shutdown (see the discussion in Section 3.5a). Since such shutdowns may occur on off-shifts or on week-ends, a replacement loading is prepared following each reloading. This replacement loading is posted in a "Special Instructions" book in the ORR control room and remains in effect until the next reloading.

This replacement loading is prepared as follows (see Example 3.6.):

1. The elements to be removed are selected (generally all the fuel elements except those in core positions A-4, A-5, A-6, and C-3).
2. The elements to be removed are listed by identity numbers. The U^{235} content of each element is listed; the value listed is the U^{235} content following the last previous reloading.
3. For each element scheduled for removal, a replacement element is selected; the U^{235} content of the selected element should be listed (this value should be about $\pm$ 5 gms of the U^{235} content listed for the element scheduled for removal).
4. The difference in U^{235} content should be listed as "change in weight U^{235}". As stated above, this value will normally be $\pm$ 5 gms; however, isolated changes of $\pm$ 15 gms U^{235} will sometimes be required. When the partial-element in core C-3 is replaced with an unirradiated partial-element, the change of fuel content will be about + 37 gms U^{235}.

5. Subtotals will be obtained for the three columns indicated on the replacement loading form. The subtotal of "change in weight U^{235}" will normally be less than ± 100 gms U^{235}.

6. The supervisor who prepared the replacement loading should sign the form.

1963

4. RESEARCH

4.1. Facilities

References

ORNL Drawings Q-2270-1 through 8, D-38319, D-38348, D-32523, C-49630, ORNL Photo 49630, and ORR Procedure Memo #98

4.1a. F-8 Hydraulic Tube System (HT-1)

Introduction

The hydraulic tube system, Figures 4.1 and 4.2, provides a relatively simple means for inserting and removing samples (targets for radioisotope production) while the reactor is operating. It will accomodate a total of twelve individual target capsules, each of which might contain several isotopes. Samples for irradiation are scheduled by Research, Isotopes, and Operations personnel, depending upon circumstances which vary from day to day. All samples, however, must meet size and weight specifications, must be properly packaged, and must be approved by Operations in accordance with the procedure outlined on pages 4-23 and 4-62.

Description of the System

1. The Reactor Section

   Five tubes enter the reactor tank through access flange V-4 (Fig. 4.7). These tubes terminate in core position F-8 in a special core piece. Four of the tubes are for samples while the fifth tube is a cooling water return line.

2. Connecting Tubes

   The five tubes, as described above, are continued outside the reactor tank, along the north wall of the pools, to the loading station in the west pool.

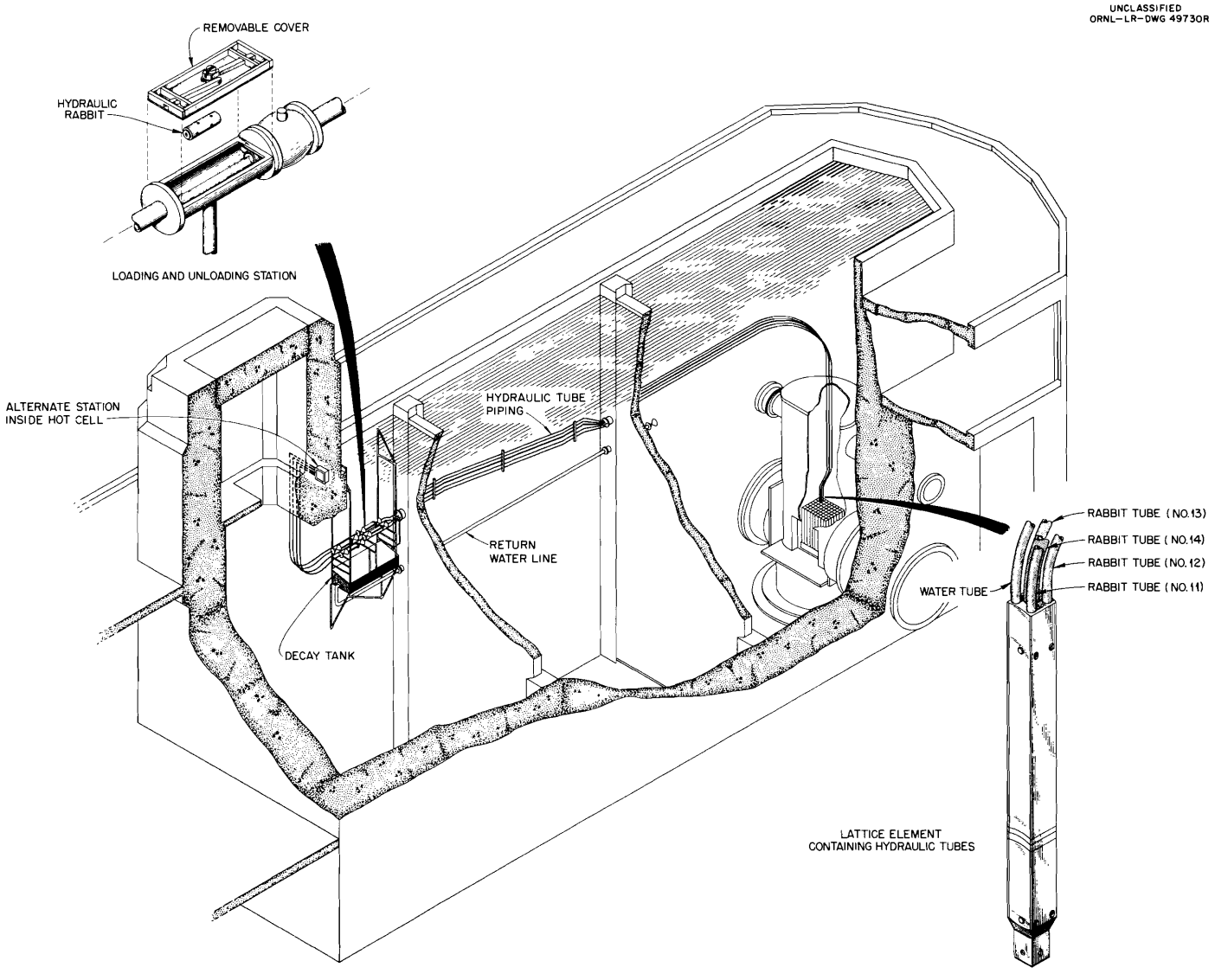

Fig. 4.1. ORR Hydraulic Tube System (HT-1)

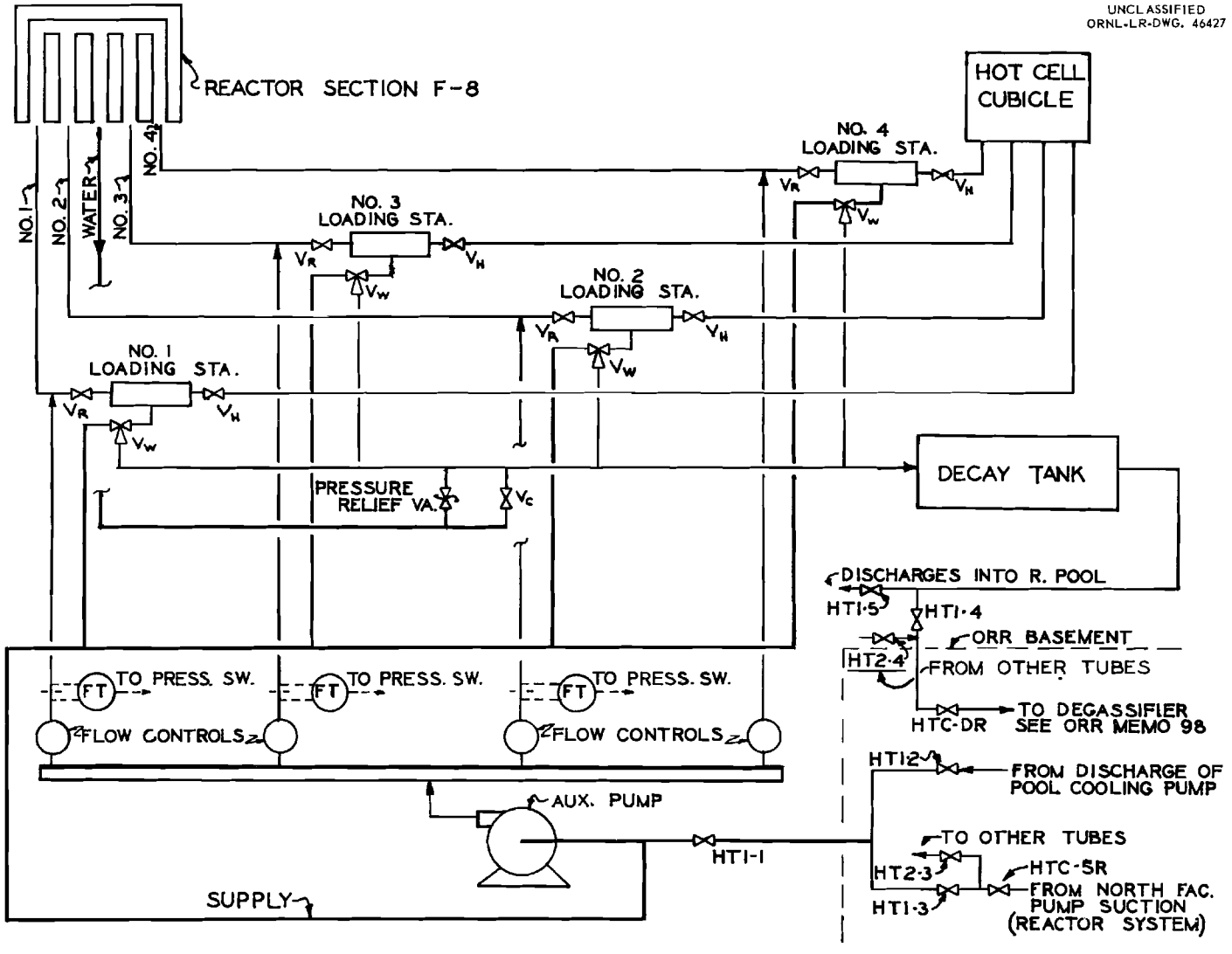

Fig. 4.2. F-8 Hydraulic Tube Schematic

3. Loading Station Section

Four loading stations are located near the north wall of the west pool. The stations are equipped with removable top sections which make the insertion and removal of samples possible. Other parts of the system located in or near this section include:

a. The hydraulic tube decay tank, located immediately under the loading stations and through which the return water passes.

b. The V_r, V_w, and V_h valves for each station (Figures 4.3, 4.4, and 4.5).

c. The V_c valve (common return, Figure 4.6).

d. The $V_{pressure\ relief}$ valve from the common return to the decay tank.

4. Water Supply Section

This section of the system extends from the loading stations to the basement. Supply water enters through valve HT1-2, pool cooling system, <u>or</u> through HTC-SR and HT1-3, reactor cooling system. Valve HT1-1 connects the supply header to the loading stations and the auxiliary pump. (HTC-SR is common to the F-8 and E-9 hydraulic-tube systems.)

5. Auxiliary Cooling Pump

A 25-gpm Goulds centrifugal pump, located on the third level and north of the west pool, serves to supply additional cooling to the samples in the core during certain phases of the operation. Separately metered lines from the discharge of this pump "tee" into the connecting tubes on the reactor side of the V_r valve. All four lines from the booster pump to the loading stations are

UNCLASSIFIED
ORNL-LR-DWG 46428

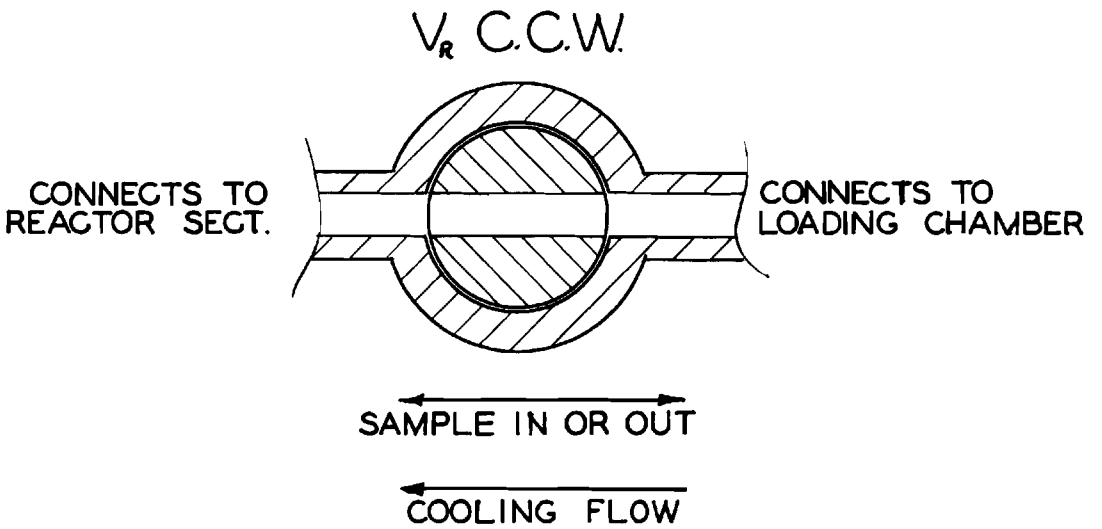

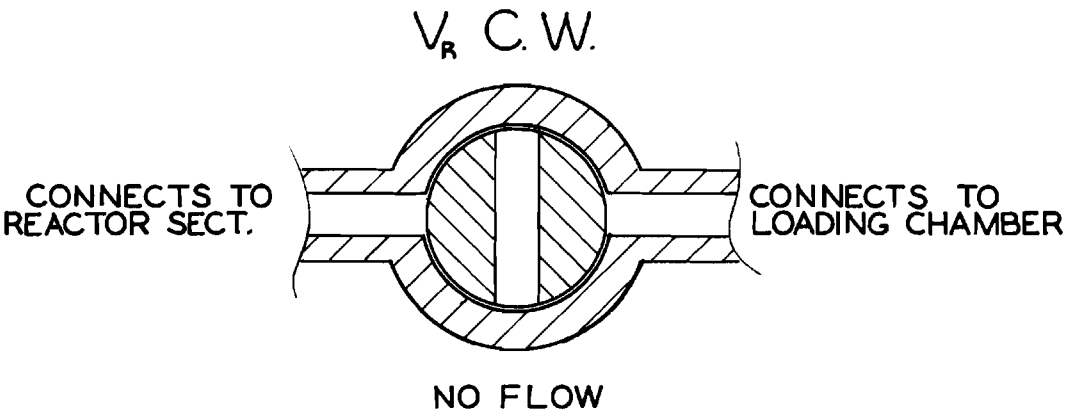

Fig. 4.3. V_R Valve Description

UNCLASSIFIED
ORNL-LR-DWG 46429

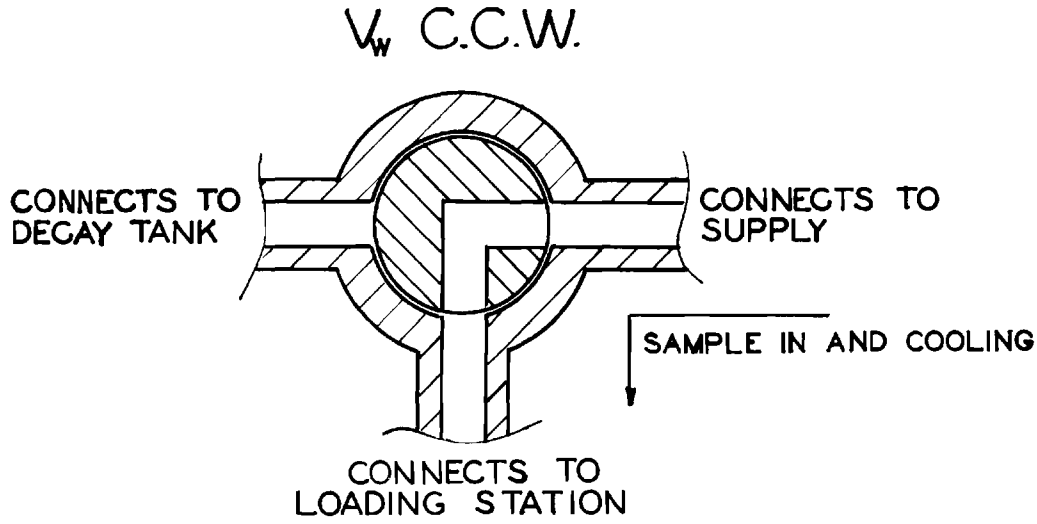

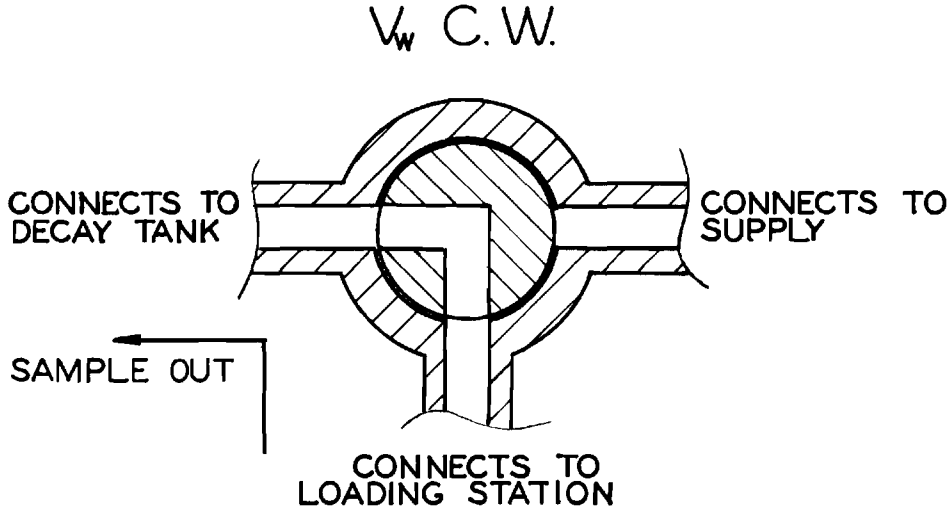

Fig. 4.4. V_W Valve Description

UNCLASSIFIED
ORNL-LR-DWG 46430

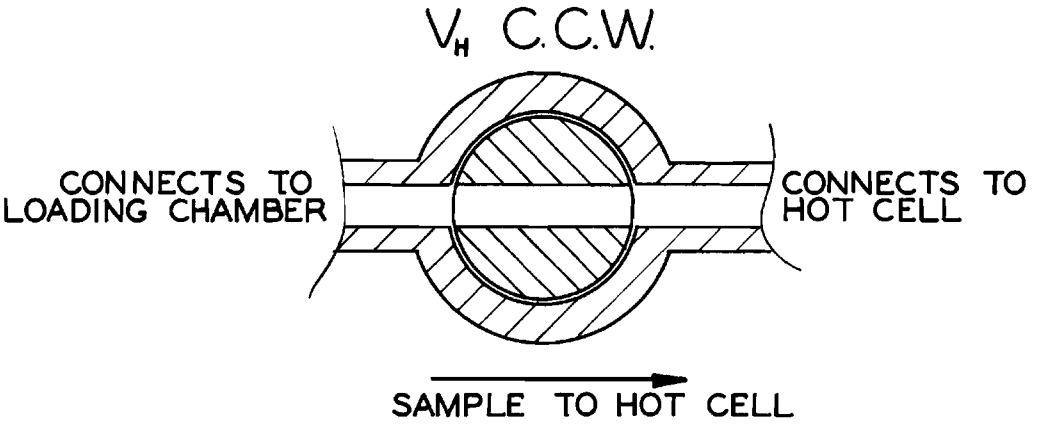

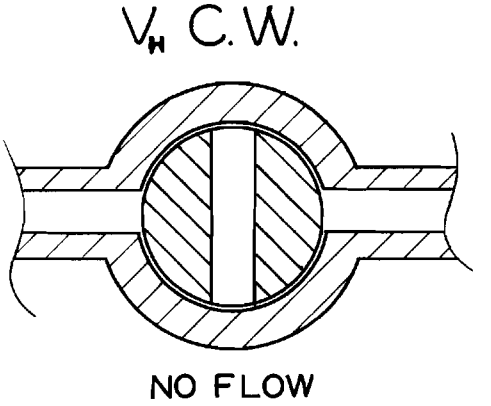

Fig. 4.5. V_H Valve Description

UNCLASSIFIED
ORNL-LR-DWG 46431

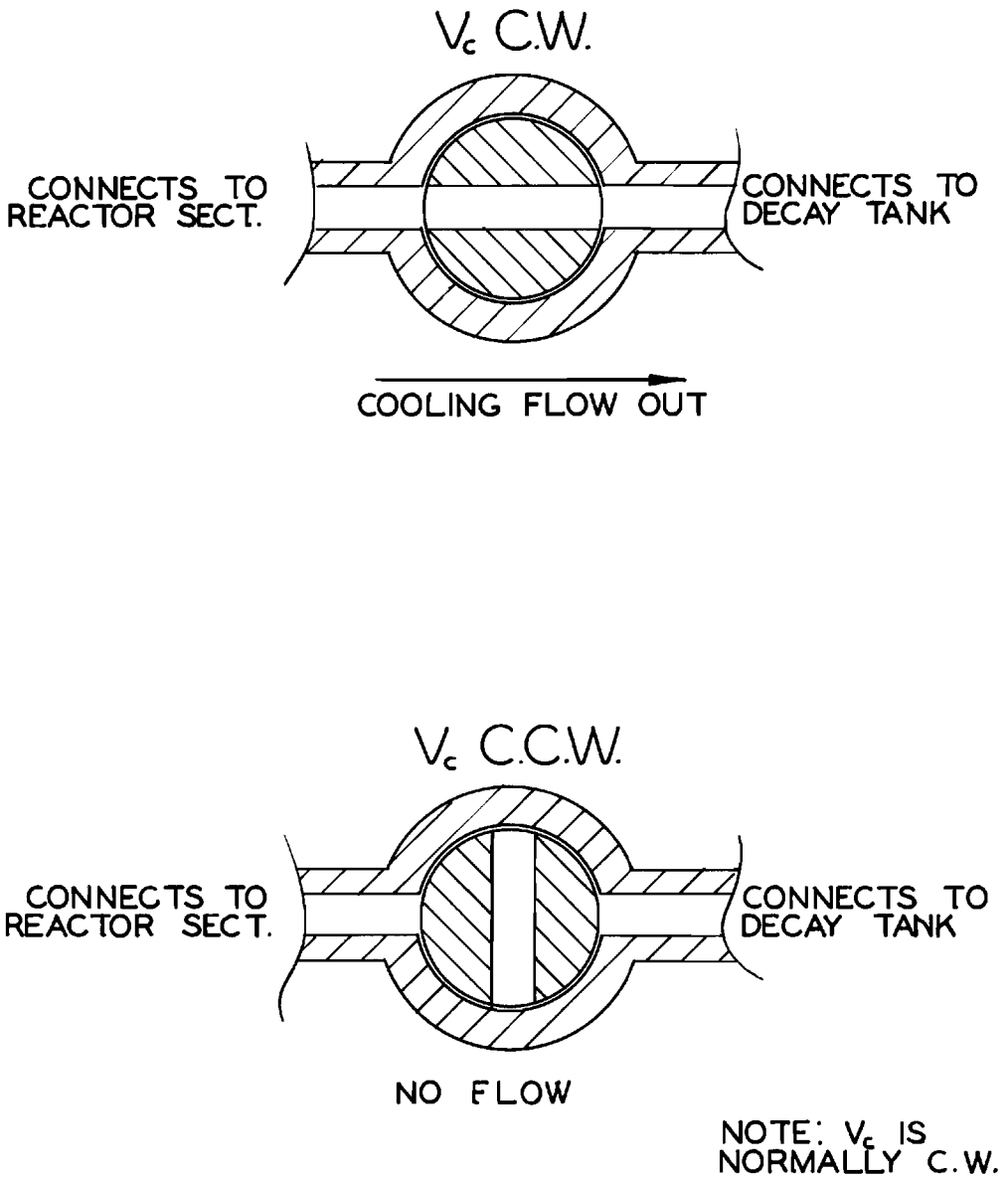

Fig. 4.6. V_C Valve Description

UNCLASSIFIED
ORNL-LR-DWG 41005

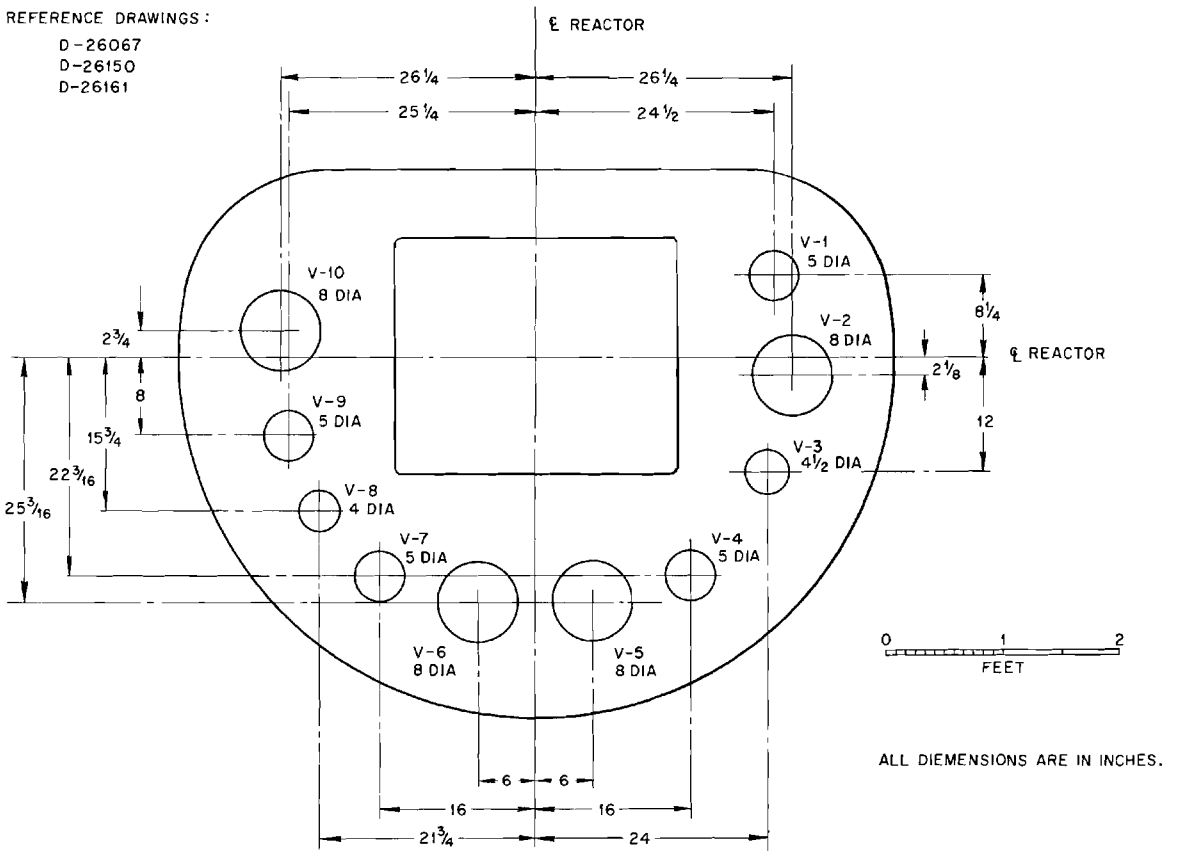

Fig. 4.7. Reactor Top Cover Plate

equipped with flow controllers which supply 3.5 gpm of water flow to tubes 11, 12, and 13 and 6.0 gpm of water to tube No. 14. In addition, lines from the booster pump to tubes 11, 12, and 13 contain orifices which are used to meter the flow during special tests involving the insertion of fissionable material into these tubes. Refer to the description of the instrumentation below.

6. Water Return Section

This portion of the system connects the decay tank to the points of discharge for the cooling water. Included are:

a. The return line which runs along the north wall of the three pools, and then to the basement.

b. Valve HT1-5, discharge to the reactor pool.

c. Valve HT1-4 connects the discharge to the degasifier inlet, line 230.

d. Valve HTC-DR, discharge to the degasifier. Valve HTC-DR is common to the F-8 hydraulic-tube system and to the E-9 hydraulic-tube system.

7. Sound Amplifying System

The hydraulic-tube system is equipped with a sound pickup and an accompanying amplifier and speaker. The microphone is attached to the auxiliary cooling lines at the poolside. The amplifier and speaker are mounted on the north hot-cell wall. This system amplifies the sounds produced as the samples arrive in the reactor section or as they enter the loading chamber during the removal operation.

8. Auxiliary Flow Instrumentation

The auxiliary cooling flow to tubes 11, 12, and 13 is metered by orifices located just above the auxiliary pump discharge header. Pressure transmitters and pressure switches for this system are located in an instrument cubicle on the west end of the north second level balcony. Each flow measurement is double tracked as is customary for experiment instrumentation. When connected to the reactor safety circuit through an "E" panel switch, an alarm is initiated when the flow in an instrumented tube drops to 2.75 gpm; and a setback results when the flow drops to 2.5 gpm.

Operation of the System (Figure 4.1)

The system is designed to use water to push samples in and out of the reactor. Water from the pool cooling pump or from the reactor cooling system, as required, supplies the necessary flow and pressure for inserting, removing, and cooling the samples. Valves at the loading stations allow the water flow to be directed toward the reactor, carrying the sample into the core. The water is then discharged through the fifth connecting tube to the decay tank and sent back into either the pool system or the reactor water system. For removing the sample, part or all of the water flow through the other hydraulic tubes is directed back up the hydraulic tube from which the sample is to be removed, carrying the sample back to the loading station.

Normally, water is supplied from the pool cooling pump and discharged to the reactor pool. Five other supply-discharge valving arrangements are possible (Figure 4.1); however, three of these are undesirable because of the interchange of water between the reactor and pool systems. The six

possible valving arrangements are listed below as normal, special, and undesirable. Special valving arrangements are to be made only upon receipt of written instructions from the reactor supervisor. Undesirable valving arrangements are to be strictly avoided.

1. Normal

   Water is supplied from the pool cooling pump and discharged to the reactor pool.

2. Special

   Water is supplied from the pool cooling pump and is discharged to the pool cooling system through the degasifier.

3. Special

   Water is supplied from the reactor cooling system and is discharged into the reactor cooling system through the degasifier. The degasifier exit can be valved to the reactor demineralizer.

4. Undesirable

   Water is supplied from the pool cooling pump and discharges into the reactor system through the degasifier.

   NOTE: This arrangement would result in a flow from the reactor tank to the pool through the equalizer leg.

5. Undesirable

   Water is supplied from the reactor cooling system and is discharged to the reactor pool.

6. Undesirable

   Water is supplied from the reactor cooling system and is discharged into the pool cooling system through the degasifier.

Placing the Hydraulic Tube in Service

1. Precautions

   a. Avoid the undesirable valving arrangements listed on page 4-12.

   b. Avoid abnormally high (above 5 psig) or abnormally low (below atm) pressure at the hydraulic tube decay tank. A good rule to remember: always open the discharge valve in the reactor pool (HT1-5) before making other valving changes.

   c. Be sure that the existing condition of the system is understood before changes are begun. This will prevent leaving samples in the core without cooling.

2. Normal Service

   Supply from the pool cooling pump; discharge to the reactor pool.

   a. Remove the system from service if necessary using the applicable part of this procedure. This will result in the following conditions:

      (1) No sample will be in the core.

      (2) All V_w, V_r, and V_c valves will be in the clockwise position.

   b. Before proceeding, ascertain that the following valves are closed. Lock and tag to prevent future misvalving.

      (1) HT1-4 (discharge to degasifier), located in the reactor pool.

      (2) HT1-3 (supply from reactor system), located in the basement above the pool cooling pump.

   c. Open the discharge valve (HT1-5) in the reactor pool. This prevents high pressure at the decay tank.

d. Open the supply from the pool cooling system, valve HT1-2. Lock open and tag.

e. Open HT1-1, located near the booster pump, third level. Water from the pool cooling pump should, at this point, be flowing through the auxiliary cooling lines, to the hydraulic tubes, through the tubes to the in-reactor section, back through the common return to the decay tank, and then through the discharge valve (HT1-5) into the reactor pool.

3. Special Service

Supply from the pool cooling pump, discharge through the degasifier to the pool cooling system.

a. Remove the system from service if necessary, using the applicable part of this procedure.

b. Before proceeding further, ascertain that the following conditions exist:

(1) Valve HT1-4, in the reactor pool, closed.

(2) Valve HT1-3, closed and tagged.

(3) Degasifier in service in the pool system.

(4) Valve HTC-DR in the basement pipe tunnel, open and locked.

c. Open the discharge valve (HT1-5) in the reactor pool. This prevents high or low pressure at the hydraulic tube decay tank.

d. Open valve HT1-2, supply from the pool cooling pump. Lock open and tag.

e. Open valve HT1-1 located near the booster pump, third level, north side of west pool.

f. Slowly open valve HT1-4, discharge to degasifier, in the reactor pool. This will purge air from the line and allow the degasifier level controller to adjust to the new flow conditions.

g. Slowly close the discharge valve (HT1-5) in the reactor pool. This mode of operation is different from "normal" only in the point of discharge of the water.

4. Special Service

Supply from the reactor cooling system, discharge through the degasifier to the reactor cooling system. This operation is to be performed as quickly as possible to prevent excessive exchange of water between the reactor and pool systems.

a. Remove the facility from service if necessary. Refer to the applicable portion of this procedure.

b. Before proceeding further, determine that the following conditions exist:

(1) Valve HT1-4, in reactor pool, closed.

(2) Valve HT1-2, closed and tagged.

(3) Degasifier, in service to the reactor system.

(4) (For special samples) degasifier discharging to the reactor demineralizer.

(5) Valves HTC-SR and HTC-DR, in the pipe tunnel, open and locked.

c. Open the discharge valve (HT1-5) in the reactor pool. This prevents high or low pressure at the hydraulic tube decay tank.

d. Open HT1-3, supply from the reactor system (overhead at the pool cooling pump). Lock and tag.

e. Open valve HT1-1, near the booster pump on the third level, north side of the west pool.

f. Slowly open valve HT1-4, discharge to the degasifier, located in the reactor pool. This will purge air from the line and allow the degasifier level controller to adjust to the new flow conditions.

g. Close Valve HT1-5, discharge to the reactor pool. At this point, water should be flowing from the reactor return line (301) (north facility pump room), through the auxiliary cooling lines, the hydraulic tubes, the in-reactor section, back through the common return to the decay tank, through the discharge line to the degasifier inlet, through the degasifier, and return to the reactor system.

Insertion of a Sample/Samples (Figure 4.1)

This insertion procedure applies for any one of the four tubes and for any desirable flow arrangement. It is assumed that the system has been placed in service in accordance with the above instructions. A description of valve operation is given in Figures 4.3, 4.4, 4.5, and 4.6.

1. Precautions

a. Be sure that all samples to be inserted meet the requirements as set forth in the sample scheduling section of this procedure.

b. Never turn a V_r valve clockwise with a sample in the reactor. To do so will stop the major part of the cooling water flow over the sample.

c. Check the special instruction notebook in the control room for possible special limitations or conditions at the hydraulic tube facility.

d. Sample movement is limited to one tube at a time.

e. The capacity of each tube is three samples.

2. Procedure

a. Determine the contents of the tube into which the sample is to be inserted; i.e., empty, one sample in reactor section, etc. This information is available from the blue sample schedule sheets in the control room.

b. If the tube contains a sample or samples, then it/they must be removed to the loading station according to the "Remove Sample" section of this procedure. Samples so removed may be reinserted with the "new" sample according to steps e-l below.

c. If the tube is empty, then determine that:

(1) Valve V_w is clockwise. This bleeds the loading station to the decay tank.

(2) Valve V_r is clockwise. This prevents backward flow when the station top is removed.

NOTE: If the above valving conditions do not exist, then further checking is necessary as an error has been committed.

d. Remove the top of the loading station using the tool provided. (Turn counterclockwise.)

e. Place the sample or samples in the loading station and move them as far east (toward the reactor) as possible. Record the relative position of the samples on the blue sample schedule sheets under the remarks section.

f. Replace the top of the loading station and latch it in place. (Turn tool clockwise.)

g. Turn the power switch of the sound amplifier to the "on" position. Allow sufficient warm-up time for the amplifier and then test for proper operation by tapping the inlet water lines near the sound pickup.

h. Turn valve V_w counterclockwise thus connecting the water supply to the loading station. (See Figure 4.4)

i. Turn valve V_r counterclockwise thus connecting the water supply to the loading station. (See Figure 4.3)

j. The sound of the sample or samples reaching the reactor section will be heard on the sound system after approximately 16 seconds (small tube); 40 seconds (large tube).

k. Leave valves V_r and V_w counterclockwise as accomplished through steps h and i. This allows water to flow through the loading chamber and the connecting tube to the reactor section to provide cooling for the sample. The water returns to the decay tank through the common return line (valve V_c <u>clockwise</u>) and proceeds to the applicable discharge point.

l. Complete the sections of the schedule sheet pertaining to sample insertions. This includes actual insertion time and relative position in the tube if more than one sample is inserted.

m. Place the sample schedule sheet in the rack in the control room.

Removal of a Sample/Samples to the Loading Station

1. Precautions

a. Do not turn valve V_c counterclockwise unless the auxiliary pump is running. This assures that $V_{pressure}$ relief will open if misvalving occurs.

b. Never turn V_r valve clockwise with a sample in the reactor. To do so will stop the major part of the cooling water flow over the sample.

c. Check the special instruction notebook in the control room for possible special limitations or conditions at the hydraulic facility.

d. Sample movement is limited to one tube at a time.

2. Procedure

a. Determine the number of samples in the tube from which the sample is to be removed. This information will help to prevent errors.

b. Check the tube involved for proper valving.

(1) V_r should be counterclockwise.

(2) V_w should be counterclockwise.

(3) V_c should be clockwise.

NOTE: If improper valving is found, further checks should be made since an error must have been made.

c. Turn the power switch of the sound amplifier to the "on" position. Allow time for warmup, and test the sound system for proper operation.

d. Start the auxiliary cooling pump.

e. At the listed time for removal, turn valve V_w clockwise to vent the loading chamber to the decay tank. In most cases, the sample or samples will start traveling from the reactor to the loading station.

f. Turn valve V_c counterclockwise to restrict the flow through the common exit line. This forces the cooling water from all other tubes to flow out through the tube from which the sample is being removed.

NOTE: If more than one tube is in service, steps d and f usually can be omitted; however, the auxiliary pump must be running with V_c counterclockwise.

g. After 10 to 30 seconds, the sample or samples will be heard entering the loading chamber.

h. Turn valve V_r clockwise to isolate the sample in the loading chamber. (Should a sample be caught in the V_r valve, quickly turn valve V_c clockwise and then counterclockwise to move the sample into the chamber; then turn V_r clockwise.)

i. Turn valve V_c clockwise.

j. If further removals are not pending, stop the auxiliary pump.

k. Open the loading station and remove the sample if applicable. Be sure the sample is properly identified.

l. Reinsert the other samples, if applicable.

Sending a Sample to the North Hot Cell

1. Precautions

a. High velocity water flow could cause damage to the sample or

to the hot cell during this operation. It is important that the V_w valve be turned counterclockwise only enough to cause movement of the sample to the cell.

b. Be sure that the sample to be moved is properly identified and that it is the only sample in the chamber during the operation. Other samples, if present, should be stored temporarily.

2. Procedure

a. Remove the sample to the loading station as described in the sample removal section. Valve positions should then be V_r clockwise, V_c clockwise, V_w clockwise.

b. Open the loading station and, after identifying, move the sample as far toward the west as possible. This step is necessary because of the sample "stop" plate in the loading chamber.

c. Replace the loading chamber top and lock it in place. (Arrow points east.)

d. Open valve V_h (counterclockwise). (See Figure 4.5)

e. Turn valve V_w counterclockwise approximately 1/3 of its travel. Leave the valve in this position for approximately four seconds and then return it to the clockwise position.

f. The sample should be in the hot cell station.

Removing the System from Service

1. Precautions

a. Avoid abnormally high or low pressure at the decay tank. (2.c, following)

b. Be sure that the existing condition of the system is understood before changes are begun. This will prevent errors such as leaving samples in the core without cooling flow.

c. Do not deviate from the procedure; i.e., proceed step by step as described later.

2. Procedure

a. Remove all samples to proper storage.

b. Normal service

(1) Close valve HT1-1. This reduces the system pressure to the pool head.

(2) Close valve HT1-5.

(3) Close and lock valve HT1-2.

c. Special service (discharge to degasifier)

(1) Slowly open valve HT1-5. This prevents high or low pressures at the decay tank.

(2) Slowly close valve HT1-4. This allows the degasifier level control to adjust.

(3) Close valve HT1-1. This reduces the system pressure to the pool head.

(4) Close valve HT1-5.

(5) Close valve HT1-2 or HT1-3 as applicable. Lock and tag.

Sample Scheduling and Records

1. Samples are usually scheduled by the customer; i.e., Isotopes personnel or research personnel.

2. A blue sample schedule sheet, filled out in duplicate by the stenographer, accompanies each sample. This schedule sheet, Example

4.1, shows the type and weight of material, the tube number, and the time for insertion and removal.

3. The sample must be approved by the reactor supervisor or his designated representative. Approval involves the checking of content, weight, packaging, and size of sample.

4. The sample is logged in and assigned a number by the stenographer or a substitute in her absence. The sample log book is maintained in the stenographer's office. The sample number is written on the schedule sheet by the stenographer.

5. The stenographer delivers the sample and the schedule sheet to the control desk operator.

6. Upon receipt of the sample, the operator should inscribe the number on the sample using the vibrator tool. The sample should then be placed in the control room storage rack, to be inserted in the hydraulic facility in accordance with the schedule sheet.

7. Schedule sheets are stored in a rack above the samples. This rack contains positions for sample sheets pertaining to:

   a. Samples to be inserted (in control room rack)

   b. Samples in the core (reactor section)

   c. Samples in the pool storage rack. This is a rack for storing irradiated samples prior to pick up by Isotopes or research personnel.

8. The operator performing the insertion or removal of a sample will complete, in duplicate, the sections of the sample schedule sheet pertaining to actual insertion or removal <u>time</u> and <u>disposition</u> of the sample. He will then file the schedule sheet in the

ORR HYDRAULIC TUBE

SAMPLE SCHEDULE SHEET

Date 1-31-63 Shift _____

Rabbit No. _____ Sample No. F-2-4

Material I^{129}

Weight 10 mg

Customer ISOTOPE SALES (CASE)

Tube No. #13

	SCHEDULED	ACTUAL
TIME IN	2:00 PM 2-1-63	2:11 PM
TIME OUT	3:00 AM 2-4-63	3:05 AM

FLOW METER READINGS: No. 1 _____ No. 2 _____

No. 3 _____ No. 4 _____

Disposition EAST SAMPLE -

Remarks SHIPPED 2-4-63

TX-2318
(7-5-60)

Example 4.1.

appropriate rack in the control room. If the sample is shipped from the building, the sample sheets are delivered to the stenographer's desk.

9. The control desk operator is to check the sample schedule sheets at the beginning of each shift. Any removals or insertions scheduled for the shift should then be reported to the supervisor in charge.

4.1b. E-9 Hydraulic Tube System (HT-2)

References

ORNL Drawings D-44475-77, D-44482-44501, D-46912, D-54370-73

Introduction

The hydraulic tube system HT-2 for the ORR, Figure 4.8, is a facility designed to allow irradiation of as many as twenty-five (25) capsules simultaneously--twenty (20) capsules 1/2 in. OD by 2 1/2 in. long and five (5) capsules 5/8 in. OD by 2 1/2 in. long. The facility consists of five separate tube lines that are essentially independent of each other. Tube lines No. 21, No. 22, No. 23, and No. 24 accommodate five 1/2 in. OD capsules each and tube line No. 25 accommodates five 5/8 in. OD capsules.

Description of the System

1. The Reactor Section:

   Ten tubes enter the reactor tank through access flange V-2. These tubes terminate in core position E-9 in a special core piece, a cross section of which is shown in Figure 4.9. Five of the ten tubes (1R, 2R, 3R, etc., in Figure 4.9) are used to insert the capsules and serve as cooling water supply lines while the other five tubes (1W, 2W, 3W, etc.) are used as returns for the water.

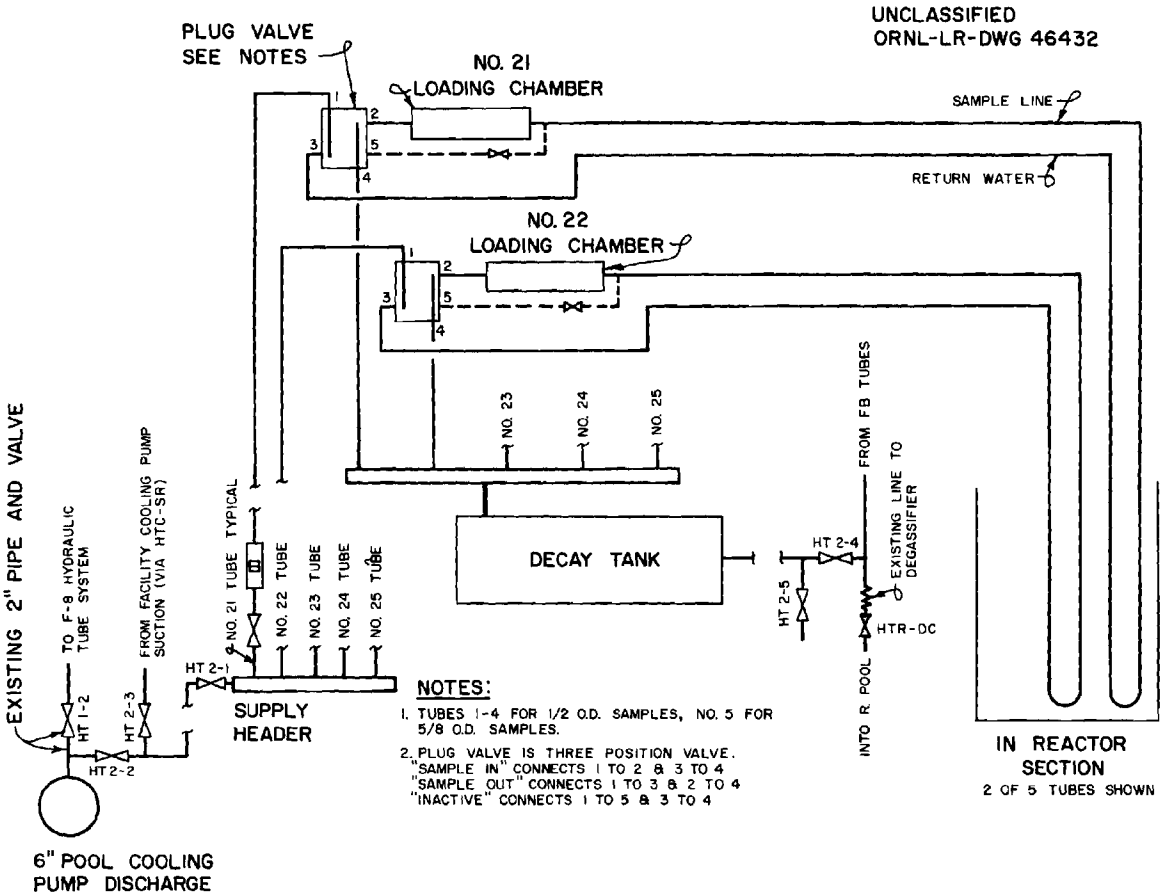

Fig. 4.8. Hydraulic Tube No. 2 Schematic

UNCLASSIFIED
ORNL-LR-DWG. 46425

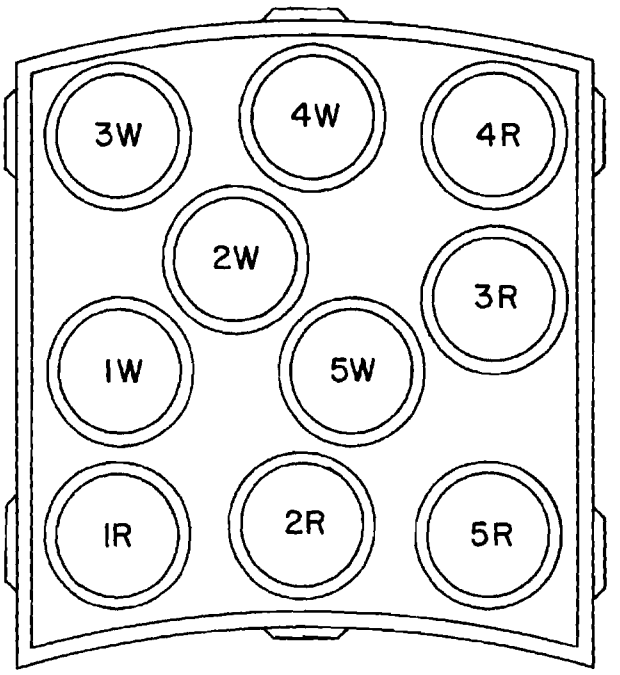

CROSS SECTION LOOKING DOWN

Fig. 4.9. Core Insert

2. Connecting Tubes:

The ten tubes, as described above, continue out the top of the reactor tank and along the north wall of the reactor pool terminating at the loading station in the center pool.

3. Loading Station Section:

The loading station section, located on the north wall of the center pool, consists of five loading chambers, each of which is provided with a hinged top and lock-down mechanism to facilitate insertion and removal of samples. Each loading chamber is designed with a water control valve (Figures 4.10, 4.11, and 4.12) built as an integral part of the loading chamber. This valve directs the water flow that moves the samples to or from the reactor lattice. The water control valve is a specially designed duplex valve with one control stem which keeps the valving arrangement from becoming cluttered and difficult to operate. There are three operating positions for each valve as described below. The water control valve determines three system conditions.

a. Inactive Position (Figure 4.10)

When the tube line is not in use, the water control valve should be in the position with the "O" showing on the indicator plate. The inactive valve position ("O" showing on the valve indicator plate) is to be selected at any time a tube is not in use or when the loading station is to be opened. In this position there is approximately 1/4 gpm (controlled by small bleed valve) of water flow through the

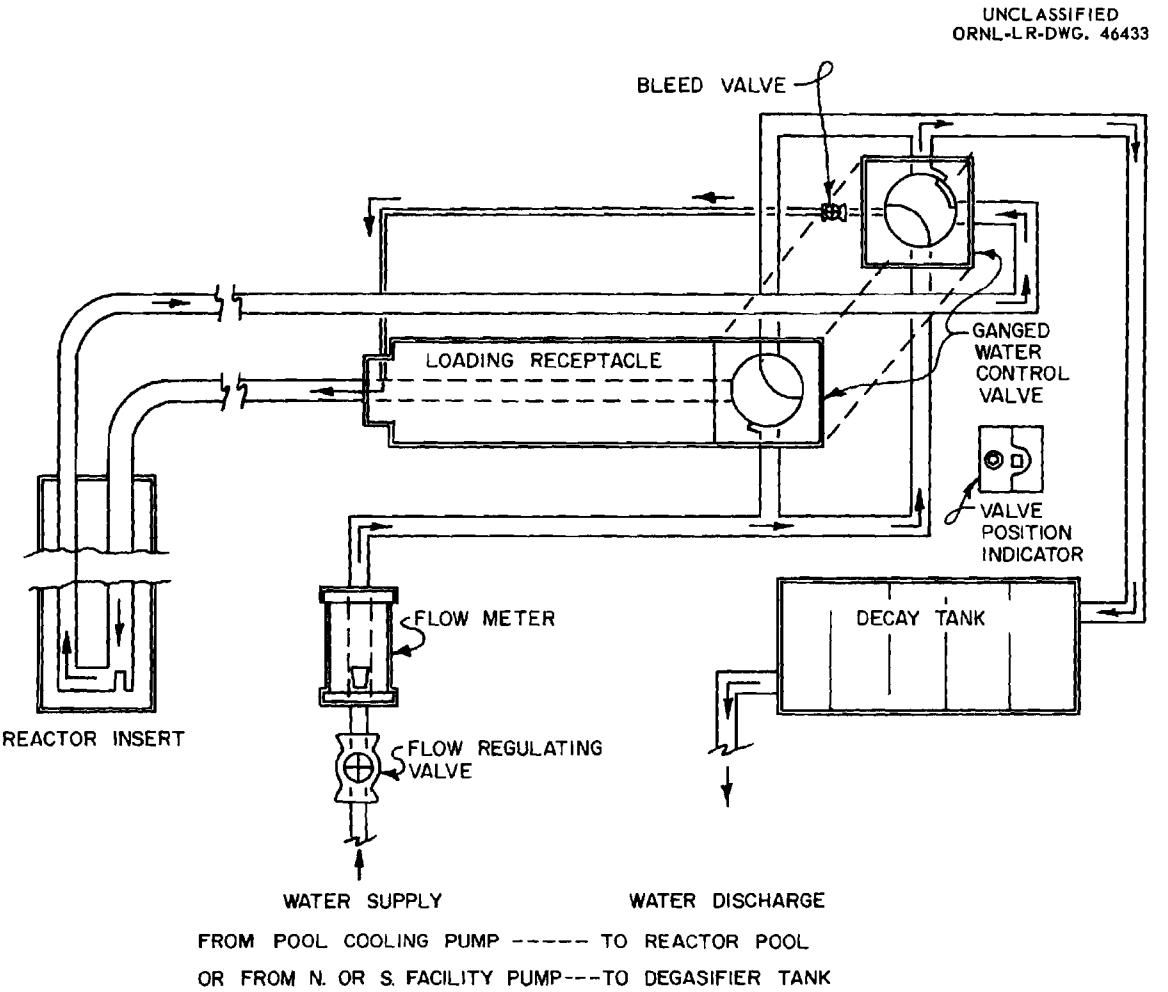

Fig. 4.10. Inactive System

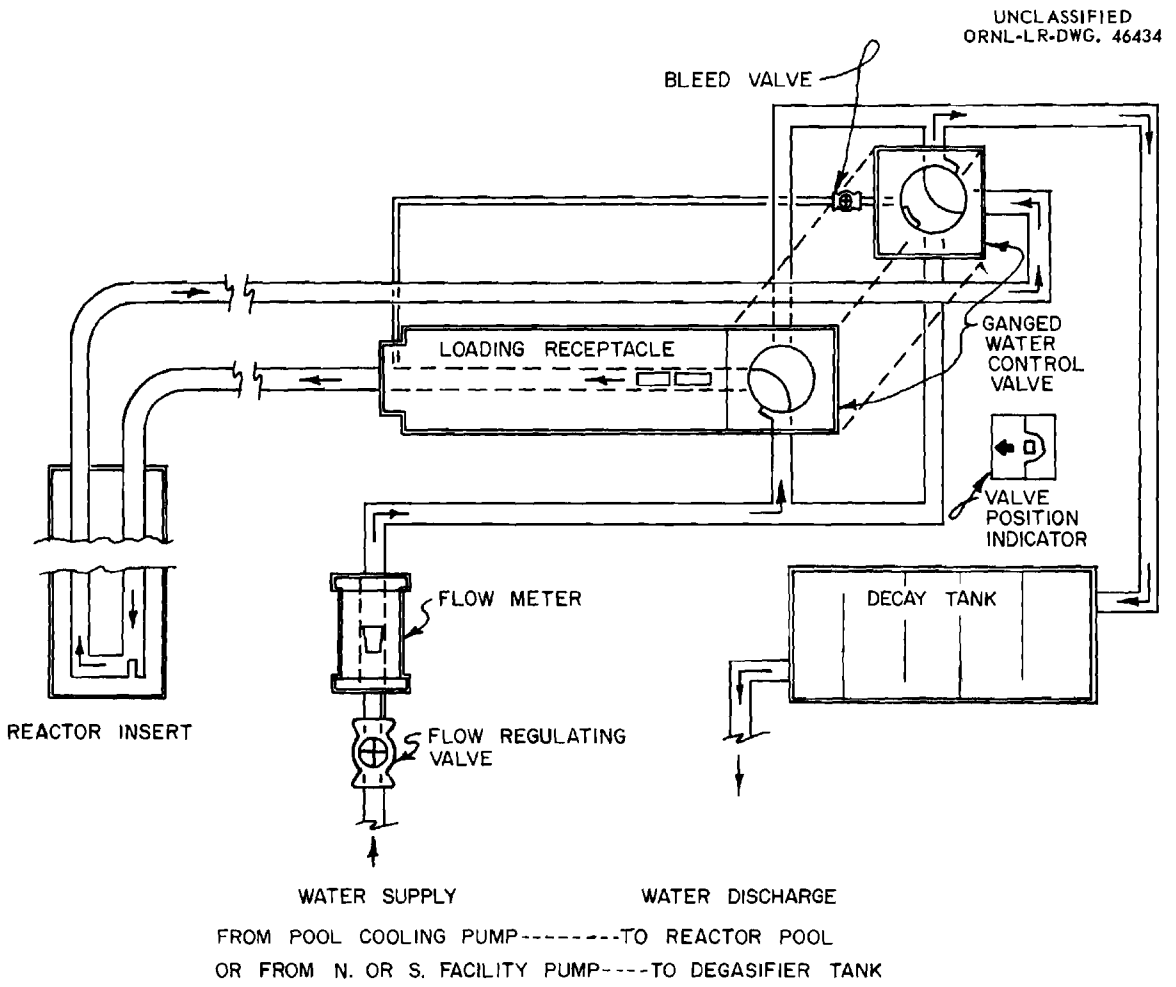

Fig. 4.11. Insert and Irradiate Cycle

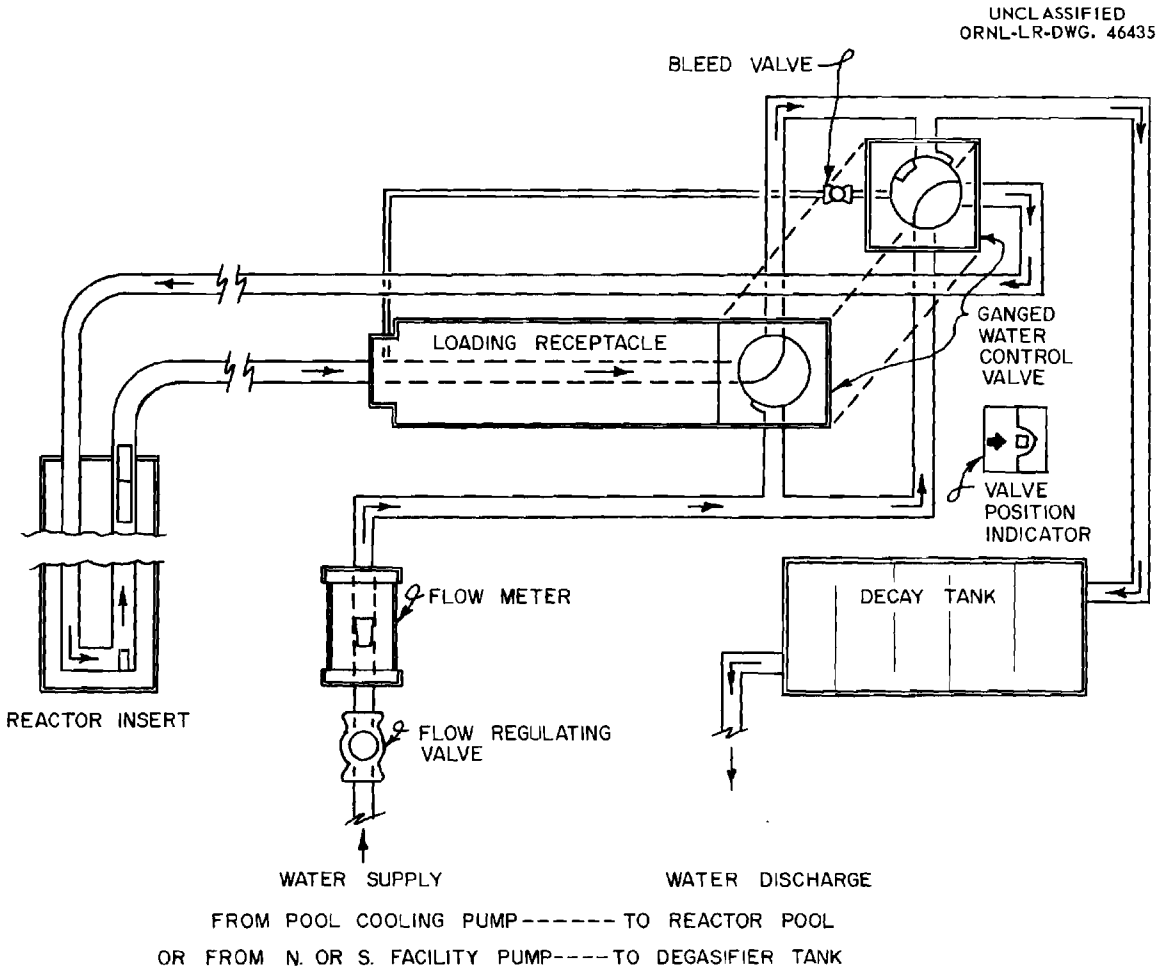

Fig. 4.12. Removal Cycle

lower section of the water control valve. This small flow bypasses the loading chamber to keep water flowing through the reactor insert when the tube line is not in use.

b. Insertion and Irradiation Position (Figure 4.11)

This valve position (arrow toward reactor on the indicator plate) allows water flow from the supply through the top valve port and the loading station to the reactor insert. This flow forces the sample(s) into the reactor insert and provides cooling during the irradiation. The water returns through the bottom port of the valve and then is routed to the discharge point.

c. Removal Position (Figure 4.12)

When the arrow pointing westward away from the reactor is showing on the indicator plate, water flows "backward" through the tube removing the samples to the loading station.

This valve position (arrow pointing away from the reactor showing on the valve position indicator plate) allows water to flow from the supply through the bottom port of the valve thus reversing the flow through the tube to move the sample(s) from the reactor insert to the loading station.

4. Decay Tank Section

This section of the system extends from the loading station in the center pool to the decay tank which is located directly below the loading station. The bottom part of all five water control valves is connected to a common return line which extends to the decay tank.

5. Water Supply Section (Figure 4.8)

This section of the system extends from the loading station to the basement. Supply water enters through valve HT2-2 from the discharge of the pool cooling pump or through HTC-SR and HT2-3 from the reactor cooling system. Valve HT2-1 connects the supply header to the loading chambers by way of five separate lines, each line having a manual valve and a flow indicator which are used to adjust the supply water flow rate. Tubes No. 21, 22, 23 and 24 require 4-gpm flow. Tube No. 25 requires 5-gpm flow.

6. Water Return Section (Figure 4.8)

The water return section connects the decay tank to the points of discharge for the cooling water. Included are:

a. Valve HT2-5 - discharge to the reactor pool from the decay tank.

b. Valve HT2-4 - discharge from the decay tank to the degasifier inlet (line 230).

c. Valve HTC-DR - discharge to the degasifier. HTC-DR is common to the F-8 and E-9 hydraulic tube systems.

7. Sound Amplifying System

The hydraulic tube system is equipped with a sound pickup and accompanying amplifier and speaker. The microphone is attached to the cooling lines at poolside. The amplifier and speaker are mounted on the north hot-cell wall. This system amplifies the sounds produced as the capsules arrive in the reactor section during insertion or as they enter the loading chamber during the removal operation. The amplifier and speaker are common to the F-8 and E-9 hydraulic tube systems.

Operation of the System

The system is designed to use water to push samples into and out of the reactor. Water from the pool cooling pump or from the reactor cooling system, as required, supplies the necessary flow and pressure for inserting, removing, and cooling the samples. Valves at the loading stations allow the water flow to be directed toward the reactor carrying the samples into the lattice. The water is then discharged from the reactor section through a separate line back through the four-way valve where it forms a common return with the other four tubes. It is then sent through the decay tank and back into either the pool water system or the reactor water system. For removing the sample, the supply water is directed toward the reactor through the return line. This forces the sample out of the reactor and back into the loading chamber. Normally, water is supplied from the pool cooling pump and discharged to the reactor pool. Five other supply-discharge valving arrangements are possible; however, three of these are undesirable because of the interchange of water between the reactor and pool systems. The six possible valving arrangements are listed below as normal, special, and undesirable. Special valving arrangements are to be made only upon receipt of written instructions from the reactor supervisor. Undesirable valving arrangements are to be strictly avoided.

1. Normal

   Water is supplied from the pool cooling pump and discharged to the reactor pool.

2. Special

   Water is supplied from the pool cooling pump and discharged to the pool cooling system through the degasifier.

3. Special

Water is supplied from the reactor cooling system and is discharged into the reactor cooling system through the degasifier. The degasifier exit can be valved to the reactor demineralizer.

4. Undesirable

Water is supplied from the pool cooling pump and discharged into the reactor system through the degasifier. NOTE: This arrangement would result in a flow from the reactor tank to the pool through the equalizer leg.

5. Undesirable

Water is supplied from the reactor cooling system and is discharged to the reactor pool.

6. Undesirable

Water is supplied from the reactor cooling system and discharged into the pool cooling system through the degasifier.

Placing the Hydraulic Tube in Service

1. Precautions

a. Avoid the undesirable valving arrangements listed above.

b. Avoid abnormally high (above 5 psig) or abnormally low (below atm) pressure at the hydraulic tube decay tank. A good rule to remember is to always open the discharge valve in the reactor pool (HT2-5) before making other valving changes.

c. Be sure that the existing condition of the system is fully understood before changes are made. This will prevent leaving samples in the core without cooling water flow.

2. Normal Service

Supply from the pool cooling pump; discharge to the reactor pool.

a. Remove the system from service, if necessary, using the applicable part of this procedure. This will result in the following conditions:

(1) No samples will be in the core.

(2) All valves will be in the inactive position.

b. Before proceeding, ascertain that the following valves are closed. Lock and tag to prevent future misvalving.

(1) HT2-4 (discharge to degasifier) located in the reactor pool.

(2) HT2-3 (supply from reactor system) located in the basement above the pool cooling pump.

c. Open the discharge valve (HT2-5) in the reactor pool. This prevents high pressure at the decay tank.

d. Open the supply from the pool cooling system, valve HT2-2. Lock open and tag.

e. Open HT2-1 which is located just beneath the flow indicators on the third level. Water from the pool cooling pump should, at this point, be flowing through the flow indicators to the hydraulic tubes, through the tubes to the in-reactor section, back through the five four-way valves, through the common return to the decay tank, and then through the discharge valve (HT2-5) into the reactor pool.

Flow through the flow indicators at this point should be approximately 1/2 gpm. If the flow rate through the tubes is not at this valve, it should be adjusted using the bleed valves at each of the five loading chambers.

3. Special Service

Supply from the pool cooling pump discharging through the degasifier to the pool cooling system --

a. Remove the system from service, if necessary, using the applicable part of this procedure.

b. Before proceeding further, ascertain that the following conditions exist:

(1) Valve HT2-4, in the reactor pool, closed.

(2) Valve HT2-3 closed and tagged.

(3) Degasifier in service in the pool system.

(4) Valve HTC-DR in the basement pipe tunnel open and locked.

c. Open the discharge valve (HT2-5) in the reactor pool. This prevents high or low pressure at the hydraulic tube decay tank.

d. Open valve HT2-2, supply from the pool cooling pump. Lock open and tag.

e. Open valve HT2-1, located at poolside, third level, north side of the center pool.

f. Slowly open valve HT2-4, discharge to the degasifier, in the reactor pool. This will purge air from the line and allow the degasifier level controller to adjust to the new flow conditions.

g. Slowly close the discharge valve (HT2-5) in the reactor pool. This mode of operation is different from "normal" only in the point of discharge of the water.

4. Special Service

Supply from the reactor cooling system discharging through the degasifier to the reactor cooling system-- this operation is to be performed as quickly as possible to prevent excessive exchange of water between the reactor and pool systems.

a. Remove the facility from service if necessary. Refer to the applicable part of this procedure.

b. Before proceeding further, determine that the following conditions exist:

(1) Valve HT2-4, in the reactor pool, closed.

(2) Valve HT2-2 closed and tagged.

(3) Degasifier in service to the reactor system.

(4) (For special samples) degasifier discharging to the reactor demineralizer.

(5) Valves HTC-SR and HTC-DR in the pipe tunnel open and locked.

c. Open the discharge valve (HT2-5) in the reactor pool. This prevents high or low pressure at the hydraulic tube decay tank.

d. Open HT2-3, supply from the reactor system (overhead at the pool cooling pump). Lock and tag.

e. Open valve HT2-1, near the flow indicators, third level, north side of the center pool.

f. Slowly open valve HT2-4, discharge to the degasifier, located in the reactor pool. This will purge air from the line and allow the degasifier level controller to adjust to the new flow conditions.

g. Close valve HT2-5, discharge to the reactor pool. At this point water should be flowing from the reactor return line (301) (north facility pump room), through the cooling lines, the hydraulic tubes, the in-reactor section, back through the degasifier line to the degasifier inlet, through the degasifier, and return to the reactor system.

Insertion of a Sample/Samples

This insertion procedure applies for any one of the five tubes and for any desirable flow arrangement. It is assumed that the system has been placed in service in accordance with the applicable part of this procedure. Description of valve operation is given in figures.

1. Precautions

   a. Be sure that all samples to be inserted meet the requirements as set forth in the sample scheduling section of this procedure.

   b. Never turn the water control valve to the inactive ("0") position with a sample in the reactor. This would stop the major part of the cooling water flow over the sample.

   c. Check the special instruction notebook in the control room for possible special limitations or conditions at the hydraulic tube facility.

   d. The capacity of each tube is five samples.

2. Procedure

   a. Determine the contents of the tube into which the sample is to be inserted; i.e., empty, one sample in the reactor section, etc. This information is available from the blue sample schedule sheets in the control room.

b. If the tube contains a sample or samples, then it/they must be removed to the loading station according to the "remove sample" section of this procedure. Samples so removed may be reinserted with the "new" sample according to step "e" below. If the tube is empty, the water control valve will be in the inactive ("O") position.

c. Use a hook to release the lock-down mechanism by raising the latch toward the south.

d. Raise the lid of the loading chamber by swinging it up and toward the north.

e. Place the sample or samples in the chamber and move them as far east (toward the reactor) as possible. Record the relative position of the samples on the blue sample schedule sheets under the remarks section.

f. Close the lid to the loading chamber and fasten it down securely with the latching machanism.

g. Turn the power switch of the sound amplifier to the "on" position. Allow sufficient warm-up time for the amplifier and then test for proper operation by tapping the inlet water lines near the sound pickup.

h. With the proper tool turn the valve clockwise to the position where the arrow pointing toward the reactor is in the east position. Water will enter the supply port in this position and push the samples into the reactor section. The sound of the samples reaching the reactor section will be heard on the sound system after approximately 9 seconds for tubes No. 21,

22, 23, and 24 and after approximately 13 seconds for tube No. 25. Flow as indicated by the flow meter should be approximately 4 gpm for tubes No. 21, 22, 23, and 24 and approximately 5 gpm for tube No. 25.

i. After the samples have stopped in the reactor lattice, no manipulation of the water control valve is required. It should be left with the arrow pointing toward the reactor. This allows water to flow through the loading chamber and the connecting tube to the reactor to provide cooling for the samples. The water returns through the individual return line to the water control valve (see Figure 4.11) and through the control valve where it joins the common return line from the other four tubes. It then goes through the common return line, through the decay tank, and proceeds to the applicable discharge point.

j. Complete the sections of the blue schedule sheets pertaining to sample insertions. This includes actual insertion time and relative position in the tube if more than one sample is inserted.

k. Place the sample schedule sheet in the rack in the control room.

Removal of a Sample/Samples to the Loading Station (Figure 4.12)

1. Precautions

a. Never turn the water control valve to the inactive ("O") position with samples in the reactor. This stops the major part of the cooling water flow over the samples.

b. Check the special instruction notebook in the control room for possible special limitations or conditions at the hydraulic facility.

2. Procedure

a. Determine the number of samples in the tube from which the sample is to be removed. This information will help to prevent errors.

b. Check the tube involved for proper valving.

The water control valve arrow should be pointing eastward toward the reactor. NOTE: If improper valving is found, further checks should be made since an error must have been made.

c. Turn the power switch of the sound amplifier to the "on" position. Allow time for warmup and test the sound system for proper operation.

d. At the specified time for removal, turn the water control valve clockwise to the position where the arrow pointing away from the reactor is in the east position. Water, at this point, will enter the return line and flow "backward" to remove the samples from the reactor lattice to the loading chamber (Figure 4.12)

e. When the samples enter the loading chamber, a distinct "click" will be heard on the sound amplifying system.

f. After the samples have entered the loading chamber, turn the water control valve clockwise to the inactive ("O") position.

g. Open the loading chamber and remove the sample/samples. Be sure the sample is properly identified.

Removing the System from Service (Figure 4.8)

1. Precautions

   a. Avoid abnormally high or low pressure at the decay tank (2.a, below).

   b. Be sure that the existing condition of the system is understood before changes are begun. This will prevent errors such as leaving samples in the reactor without cooling flow.

   c. Do not deviate from the procedure; i.e., proceed step by step as described below.

2. Procedure

   a. Normal Service

      (1) Close valve HT2-1. This reduces the system pressure to the pool head.

      (2) Close valve HT2-5.

      (3) Close and lock valve HT2-2.

   b. Special Service (discharge to degasifier)

      (1) Slowly open valve HT2-5. This prevents high or low pressure at the decay tank.

      (2) Slowly close valve HT2-4. This allows the degasifier level control to adjust.

      (3) Close valve HT2-1. This reduces the system pressure to the pool head.

      (4) Close valve HT2-5.

      (5) Close valve HT2-2 or HT2-3 as applicable. Lock and tag.

Sample Scheduling and Records

For a description of sample scheduling and records keeping, see 4.1a, F-8 Hydraulic Tube System (HT-1), page 4-22.

4.1c. Beam-Hole Facilities

The Beam-Hole Facilities include six horizontal beam holes on the east face of the reactor. These facilities have been provided for experiments utilizing collimated neutron beams. The beam holes, Figure 4.13, are of circular cross section, decreasing in diameter from approximately 9-1/8 in. at the face of the concrete to approximately 6-3/4 in. at the reactor vessel. The pipe which encases a beam hole is designated as the liner. Each beam hole is equipped with a collimator plug or, in its absence, a dummy plug. The plug seals the outer end of the beam hole and extends inward to within three feet of the reactor vessel. They may be serviced with water supply and return, plant air reduced to 15 psig, warm drain, off-gas, and helium.

Since the beam-hole liners are anchored at both the reactor tank and at the concrete shield, they must be water cooled to prevent excessive stresses from developing in the reactor vessel due to temperature variations. Constant beam-hole liner temperatures are assured by spraying water from manifolds on the top and bottom of each liner. Water for these sprays is furnished by taking part of the water returning from the pool cooling heat exchanger and directing it to the spray manifolds as shown in Figure 4.14. About one-third of the total pool cooling flow of 750 gpm is sprayed on the beam-hole liners. The temperature of this returning water is about 85°F.

The reactor cannot be operated at full power unless the beam-hole liner spray cooling system is in operation. A relay in the pool cooling water flow-meter prevents raising the reactor above 1.8% of full power without adequate cooling flow. Since the beam-hole liner spray system

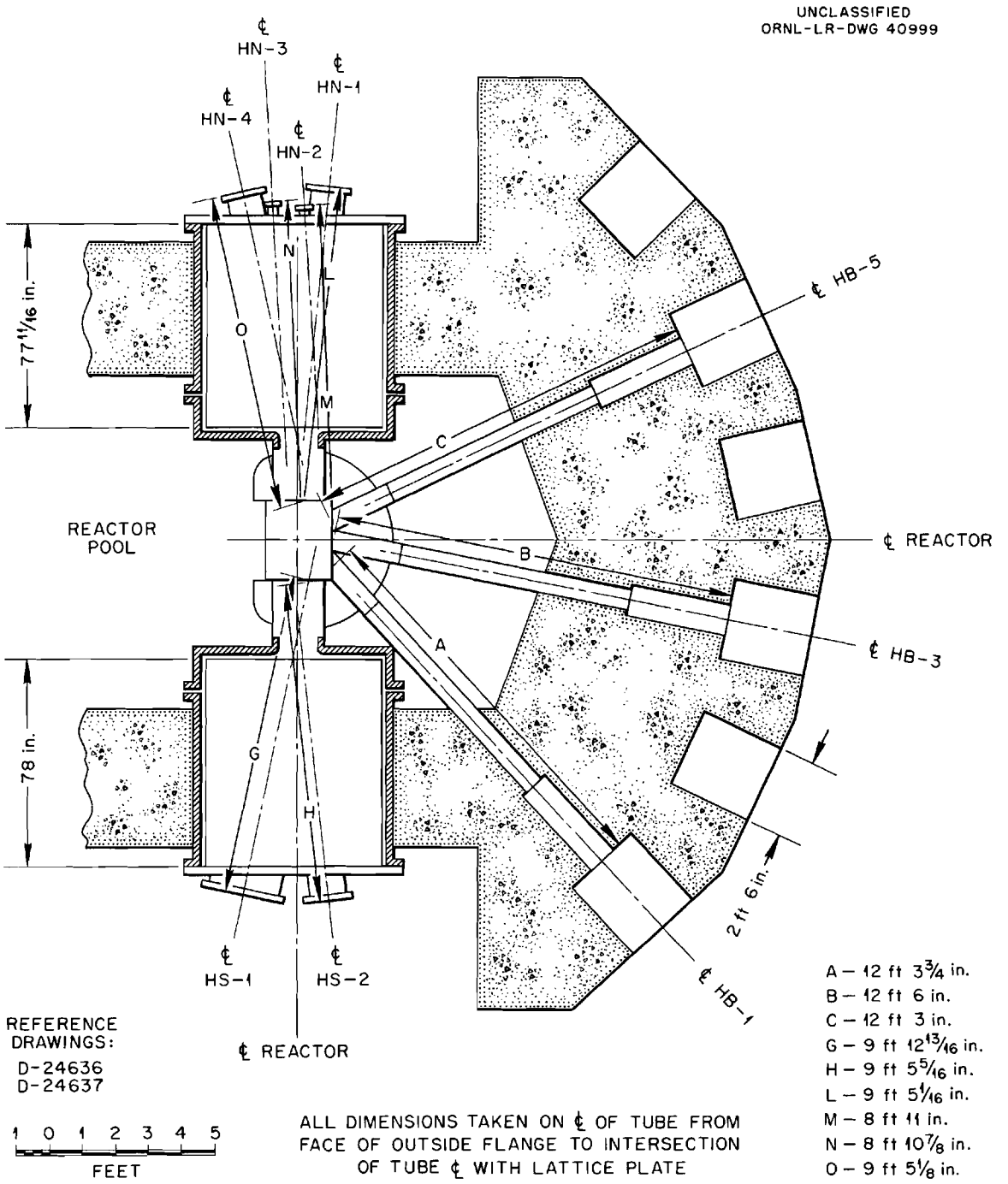

Fig. 4.13. Beam Holes

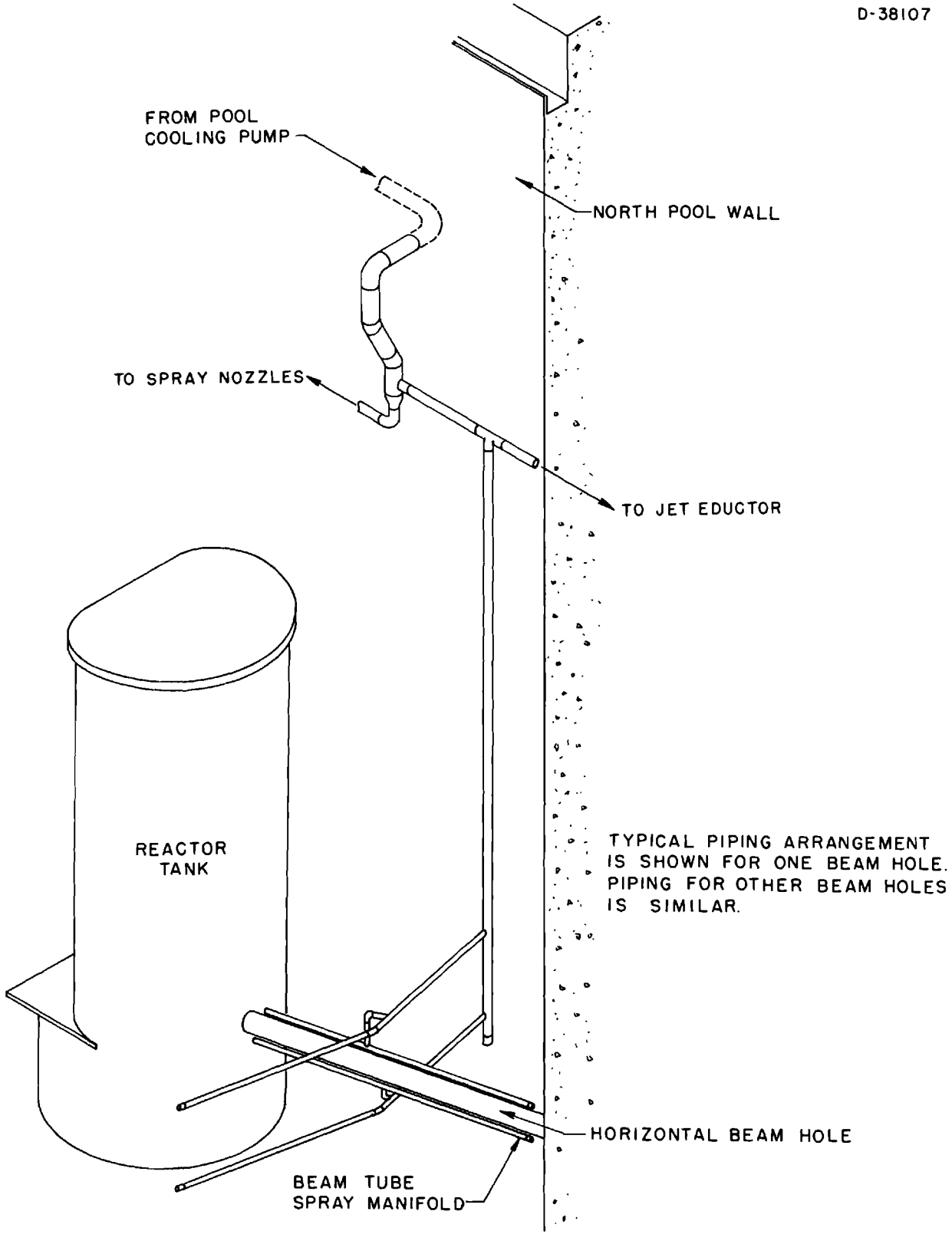

Fig. 4.14. Spray Cooling for Beam Hole Liners

is the only pool cooling water return line that contains no cutoff valve, operation of the liner spray at any significant reactor power is assured.

During the installation or operation of an experiment, biological shielding can be obtained by filling the liner and plug with water. Movable shielding may also be located, for equipment, etc., in the space available in front of the beam holes. A typical experiment is shown in Figure 4.15.

4.1d. Engineering Test Facilities

The two large penetrations to the reactor lattice, located on the north and south sides of the reactor, are designated as the Engineering Test Facilities. Two large water-tight bulkheads, approximately 5 1/2 ft in diameter, pierce the shield to a point just outside the reactor tank, opposite the lattice, where a transition section, of ob-round shape approximately 19 x 25 in., penetrates the tank. Since only one of these large holes is needed at the present time, two 10-in.-diameter holes and two 4-in.-diameter holes are built into the large plug for the north side and are known as HN-1, HN-2, HN-3, and HN-4. The south facility is known as HS.

Shielding is provided by lead brick on the outside and water on the inside of the plug. The water, circulated by a pump, also serves as a coolant for the facilities. About 800 gpm is taken from the return from the main coolers and is sent three directions. About 75 gpm goes to the reactor demineralizer system, about 50 gpm to the vacuum degasifier, and the rest flows through the large facilities before returning to the exit stream from the reactor as shown in Figure 4.16. A typical engineering loop experiment in one of the 10-in. holes is shown in Figure 4.17.

UNCLASSIFIED
ORNL-LR-DWG 28400R

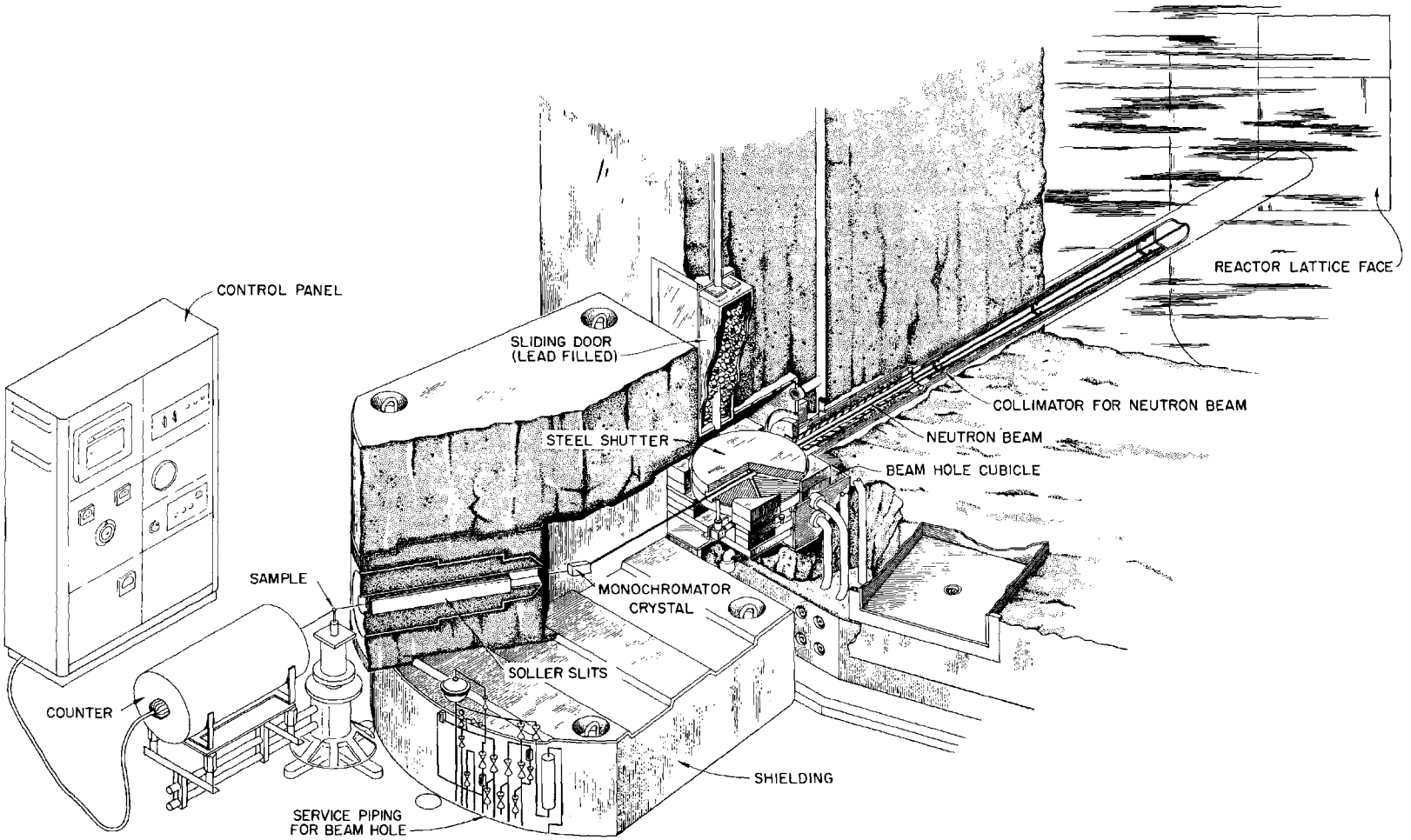

Fig. 4.15. Neutron Beam Experiment Showing Movable Shielding Outside Reactor

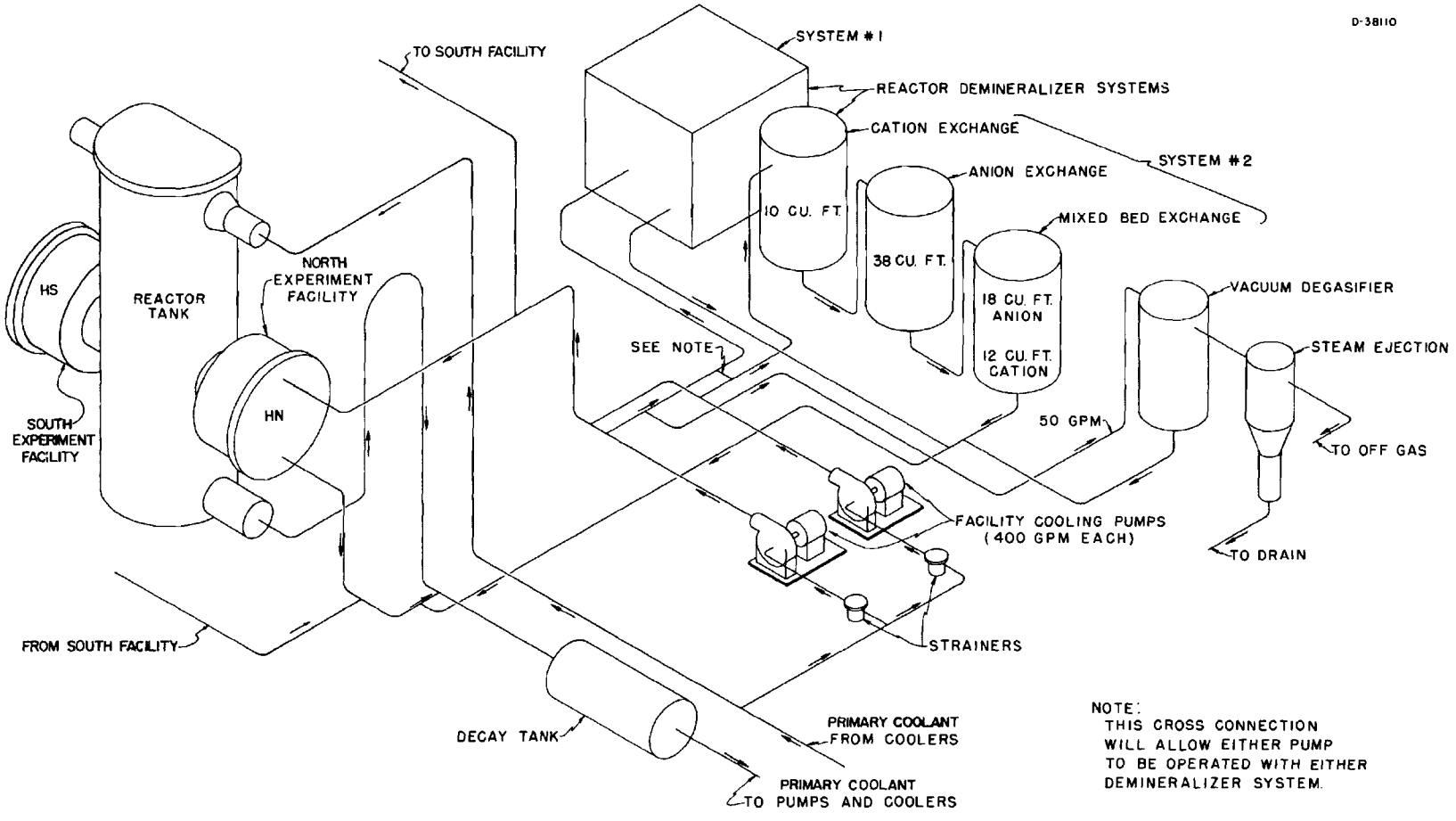

Fig. 4.16. Facility Cooling System

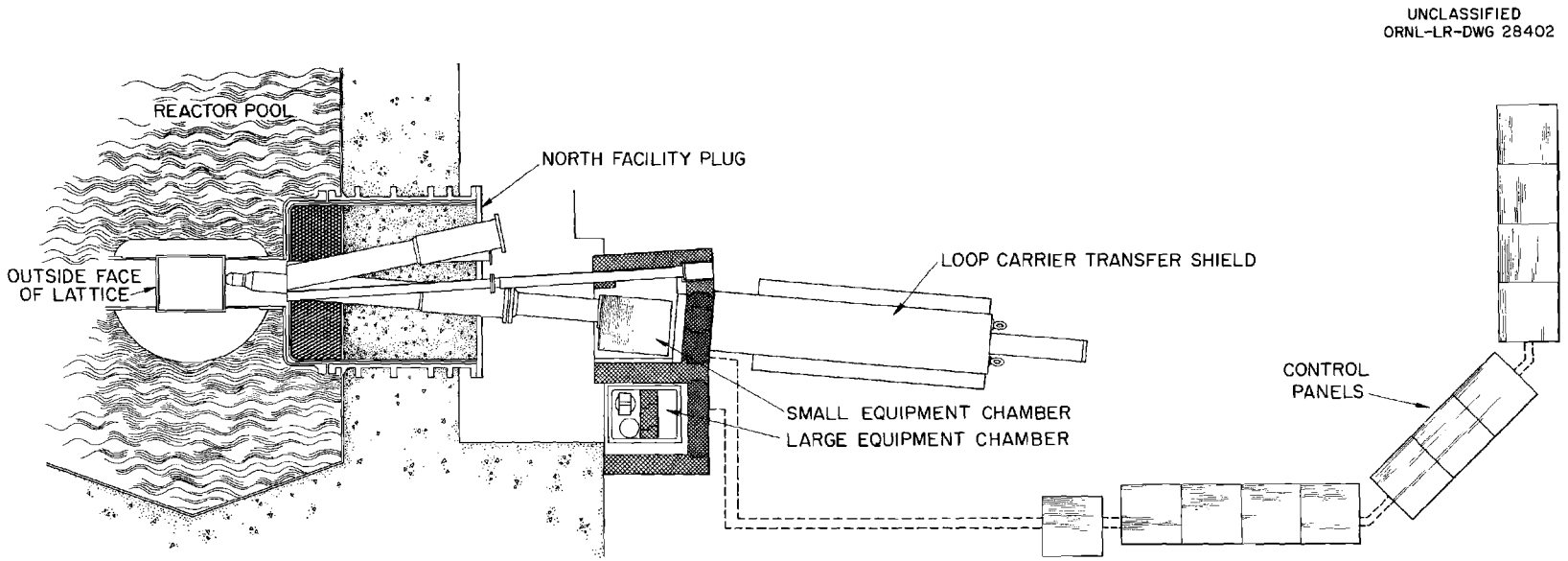

Fig. 4.17. Loop Experiment in Large Facility

4.1e. Vertical Facilities

Since the control rods are driven from the bottom of the reactor, the top is available for experiments. Flanges in the tank cover provide for as many as ten experiments such as that shown in Figure 4.18. The experiments are inserted in curved tubes which, in most cases, extend from above the normal pool water level to the reactor core level. The tubes can be inserted either in a core position or in voids in the beryllium. The curved tube enters the reactor tank through an access flange allowing insertion and removal of fuel through the top of the reactor without disturbing the experiment. The experiments may be connected to shielded rooms in the basement where compressors, heat exchangers, and other equipment are located. The pool provides shielding for the connecting pipes and permits the experiment to be removed from the reactor tank without shielding other than the pool water. Figure 4.19 is a schematic of a typical vertical loop experiment.

4.1f. Pool Side Facility

The flat, west side of the reactor tank provides a facility where experiments may be inserted in the pool adjacent to the reactor core with a minimum of difficulty, Figure 4.20. Although the facility was designed to permit large "bulk shielding" type experiments to be placed close to the core, experience has shown that it is most useful for experiments which would be awkward to install in one of the other facilities.

UNCLASSIFIED
ORNL-LR-DWG 35831R

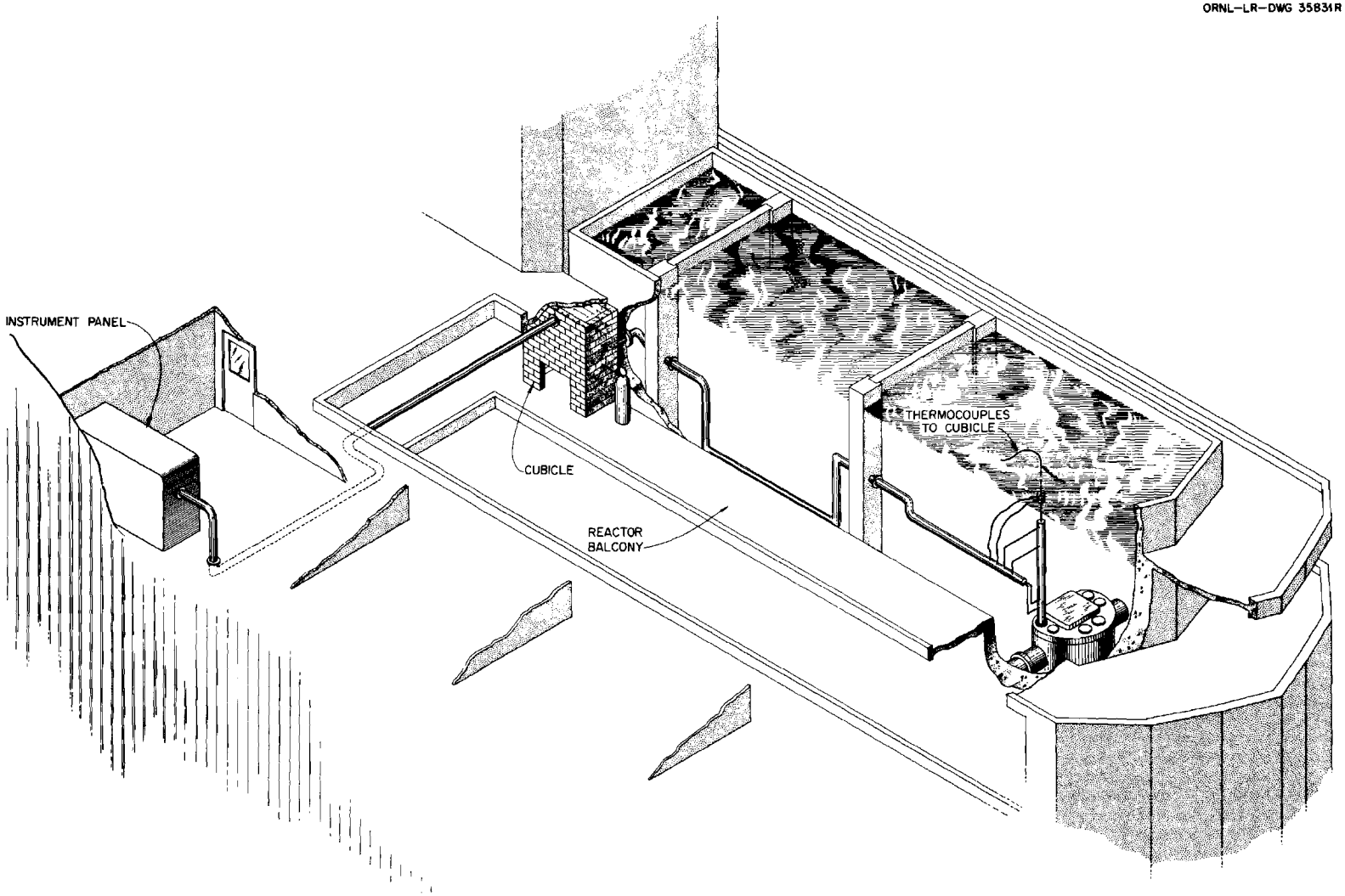

Fig. 4.18. Vertical Facility

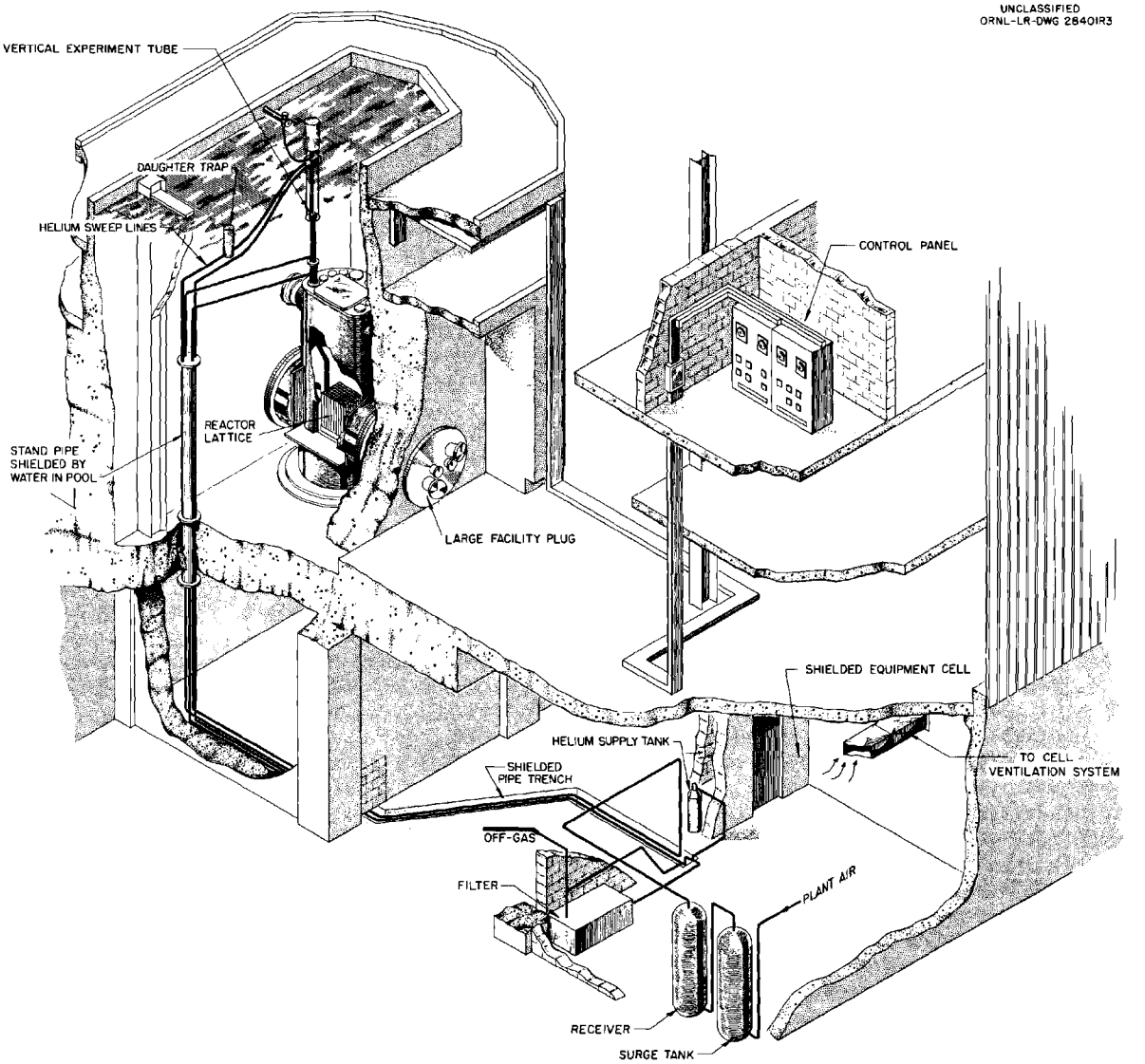

Fig. 4.19. Vertical Loop Experiment Showing Provisions for Shielding Piping and Equipment

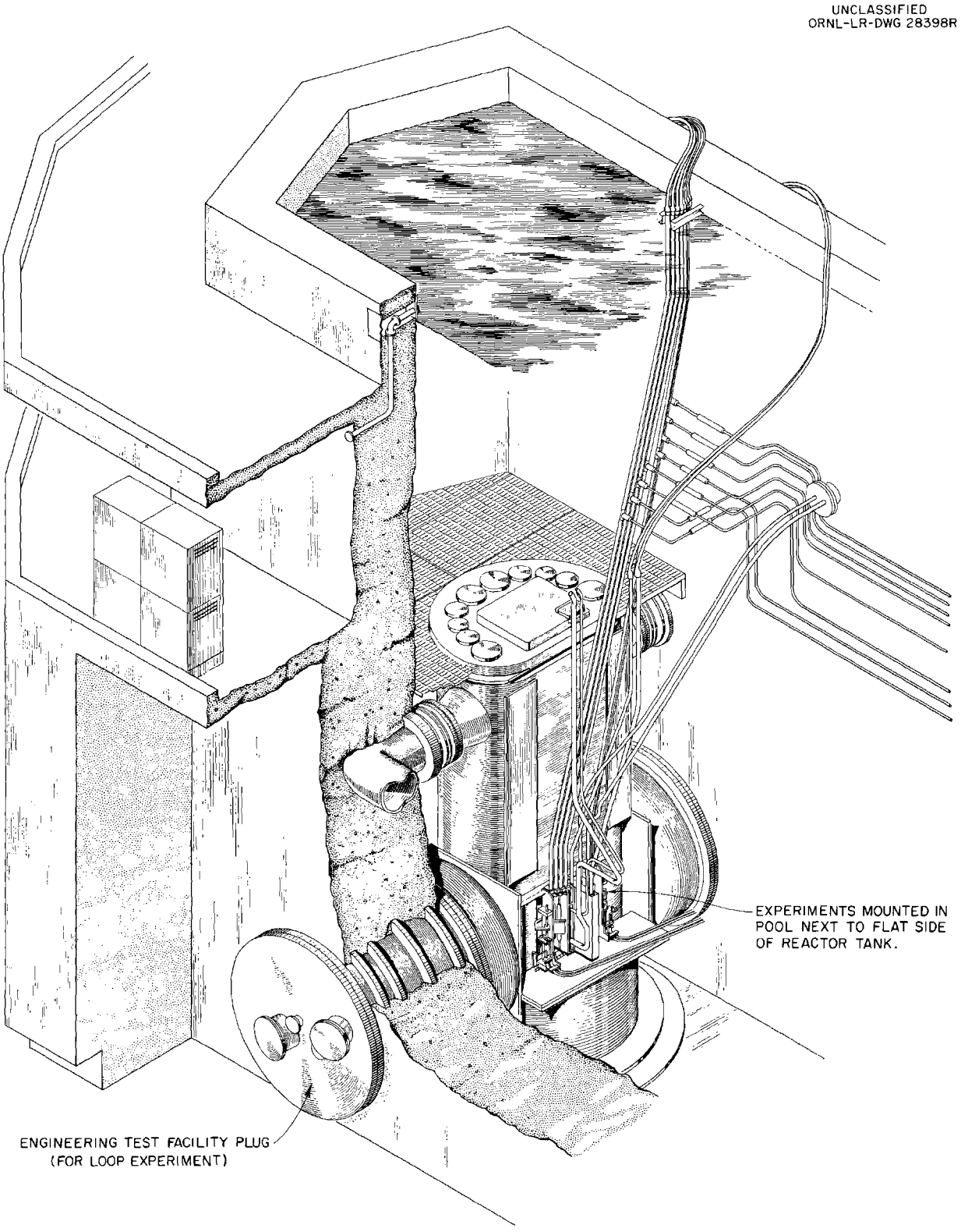

Fig. 4.20. Pool Experiment Showing Simplicity of Mounting Next to Reactor Lattice

4.1g. Experiments Not Requiring External Connections

Experiments which do not require external connections may be irradiated inside beryllium reflector elements which have 2-in.-diameter inserts; or, they may take the place of a reflector piece entirely. Radioisotope samples may be irradiated in the same manner. Experiments requiring fast neutron flux may be inserted either adjacent to fuel elements or inside modified fuel elements.

Used fuel elements are removed from the reactor tank through the pool and placed in a gamma irradiation facility where experiments may be conducted in radiation fields of the order of 10^7 r/hr. A neutron flux due to D (γ, n) H of about 10^4 n/cm^2/sec results from the natural abundance of deuterium in the water; however, in the gamma facility this is minimized by having each element in a cadmium box.

4.1h. Hot Cell Facilities

A Hot Cell, Figure 4.21, is located above the west end of the storage pool. The cell is arranged so that samples or experiments may be transferred from the pool into the cell through doors in the bottom, and it is intended for use in disassembly and preliminary inspection of experiments and samples.

The Hot Cell is divided into two sections each of which has walls of dense concrete 3.5 ft thick. It is designed to shield 10^6 curies of Co^{60}, or the equivalent, with a radiation level, outside the cell, of less than 5 mr/hr. They are completely lined with stainless steel. The cell is equipped with sprays for cleaning, hot drains, and hot off-gas connections. For experimental work, a pneumatic hoist, manipulators, and lead

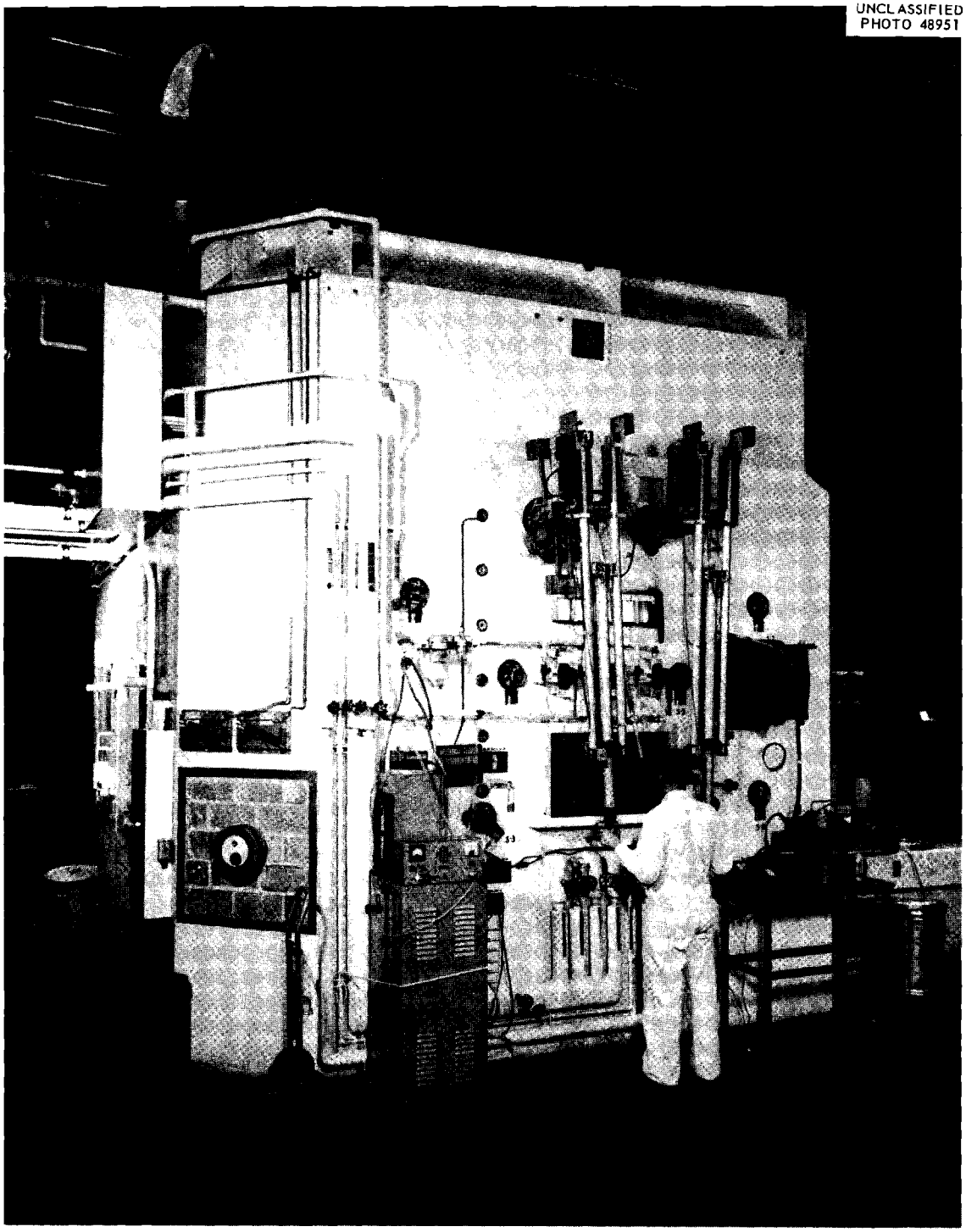

Fig. 4.21. ORR Hot Cell

glass windows are provided for the necessary handling of irradiated materials inside the cell.

The Hot Cell is operated by the Hot Cells Operations Department, a department of Operations Division. Persons wishing to use the Hot Cell should contact the supervisor of that department.

4.2. Experiments

4.2a. Handling of New Research Experiments

The following procedures are for the handling of new research experiments from the time of initial contact by the research personnel with Operations personnel until the termination of the experiment operation.

1. Preliminary Contact of Operations by Research

   Research personnel may initially contact anyone in the Reactor Operations Department. When this occurs, the research man shall be directed to the official liaison between operations and research. In some cases discussions may be desirable with the Superintendent of Reactor Operations Department.

2. Preliminary Review and Space Assignment

   The official liaison will handle the space assignments and will obtain any technical aid from the Operations Technical Assistance group. The research man will work directly with the E & M Division and the I & C Division on the experiment design after all space assignments and other initial decisions have been made by Reactor Operations Department through the liaison.

3. Assignment of the Experiment to Technical Personnel

   After all preliminaries have been completed, the handling of the experiment will be turned over to an Operations Technical man selected by the Superintendent of Operations Division. The duty of this technical man is to see that initial requirements in the design and installation of the experiment are met by the research man. He will also see that any necessary changes or developments in design and installation have the approval of the Reactor

Operations Department. He will require that the initial requirements in the design and installation of the experiment are met by the research man. He will also see that any necessary changes or developments in design and installation have the approval of the Operations Division. He will require that the research personnel complete, at the earliest possible date, a questionnaire for experiment review and submit it to the liaison for obtaining the necessary approvals. This questionnaire may be of a rudimentary nature to establish the operability of the experiment and to be reviewed only by Operations Division personnel. If this is done, a more detailed questionnaire must be prepared later, for safety approval by the Operations Division and, in most cases, by the Experiment Review Committee, before the experiment can be installed. If research personnel so desire, the detailed questionnaire may be completed at this time and may also serve as the operability questionnaire; however, the operability review should generally be done before the experiment is completely designed.

4. Operability Review by Operations Division

The operability review should be made in the early stages of design. This may involve only a meeting with Operations Division personnel to review the following items:

a. Operational feasibility and compatibility with other experiments and with reactor operations.

b. Adequacy of equipment design from the standpoint of installation into, and removal from, the reactor.

c. Provisions for neutralizing the equipment, in case of failure, so that operation can continue.

5. Final Review by Operations and the Technical Group

When the liaison is satisfied with the review questionnaire, it will be turned over to the head of Operations Technical Assistance Department for final approval by Operations Division. If the experiment does not meet the approval of the Operations Division, the questionnaire and comments will be given back to the liaison for revision by the research personnel. The liaison may contact the research personnel directly or have the Operations technical man assigned to the experiment to do this. In some instances, for the purpose of clarification, it may be desirable to arrange a meeting between research personnel, Operations Technical Assistance Department Head, and other Operations personnel before approval is given.

6. Review by I & C Division and the Experiment Review Committee.

When Operations Division's requirements for the over-all experiment are met, a request will be directed, by the liaison or Operations Technical Assistance Department Head, to the I & C Division for a final review of safe-guard instrumentation. When the final review is satisfactory, written approval for the experiment will be given to the liaison for Operations Division by the Operations Technical Assistance Department Head. At the same time the Operations Technical Assistance Department Head will request that the experiment be reviewed by the Experiment Review Committee if it is considered sufficiently complex, hazardous, or different from already approved experiments; otherwise, the experiment will be considered approved for operation in a reactor.

Those experiments requiring review by the Experiment Review Committee will be considered ready for operation only after being reviewed and approved by the committee.

7. Installation & Inspection of the As-Built Experiment

   a. All aspects of the installation of the experiment, including the scheduling of the time of installation, will be handled by the Operations Division technical man assigned to the experiment. After the installation is complete, a final inspection should be made by the liaison, with the aid of the Operation Technical Assistance Group and other personnel the liaison may request, in order to know that the "as-built" equipment meets the required specifications. Also, the specimens to be irradiated should be inspected, by the same personnel, if possible, before irradiation in the system. One of these inspecting personnel should be the Reactor Supervisor of the reactor into which the experiment is installed.

   b. After the experiment is installed, the responsibility for liaison between Operations Division and Research becomes the responsibility of the reactor supervisor who may at any time request assistance from the Operations Technical Assistance Group, Operations technical man assigned to the experiment, or the official liaison.

   c. Reinsertion of specimens in an approved facility will be under the direction of the reactor supervisor. He should notify the liaison and Operations Technical Assistance personnel to allow their inspection of the specimen and to obtain their approval for its insertion.

d. Reinsertion arrangements for an experiment facility which has been removed should be directed by the liaison in the same manner as for a new experiment which has already been approved by the Operations Technical Assistance Department Head and the Experiment Review Committee.

e. Approval for changes, either in the method of operation or the physical makeup of an experiment, should be obtained by the liaison from the Operations Technical Assistance Department Head.

8. Termination of Experiment

Termination of an experiment will be reported to the liaison by the reactor supervisor. The liaison will take steps to place the Experiment Information File in the "inactive" files and notify the appropriate personnel that a facility has been vacated and may be offered for use to other Research Groups.

9. Disposal of Used Experimental Equipment

Disposal of the used equipment from any experiment will be handled by the reactor supervisor and the research personnel involved. Storage of any equipment in the Operations Area should be approved by the reactor supervisor in charge of the area.

10. Experiment Operational Records

a. A brochure for each experiment is started when initial contact is made with the research personnel concerning any experiment. This brochure may be a loose-leaf notebook in which copies of all correspondence, records of meetings, commitments, etc., are filed. It is not necessary to file all

blueprints in the brochure since they are too bulky; however, schematics and layout prints may be of value. A file is started and maintained by the liaison at the time the planning for any experiment is begun. It should contain duplicates of the material in the brochure plus all other literature and prints too detailed and bulky for the brochure.

b. The brochure should be in the possession of the Operations person who is in charge of the experiment at the time and should aid in defining when any other person's direct responsibility ends. The routing of the brochure is somewhat as follows:

(1) The liaison starts the brochure and inserts copies of correspondence, minutes of meetings, and memoranda stating decisions which occur during the initial phase.

(2) The technical man assigned to the experiment receives it from the liaison when he is placed in charge of the experiment.

(3) The Department Head in the Operations Technical Assistance Group receives it when it goes to him for approval. He returns it to the liaison after approval.

(4) After Operations Division and Experiment Review Committee approval is obtained, the brochure goes back to the technical man who is following the experiment.

(5) When the experiment is ready for the final inspection before operation, the brochure goes back to the liaison who will place it, after the final inspection, in the

file of "Operating Experiments" along with other literature related to the experiment. The reactor supervisor will add any operating information which may be considered important as the experiment progresses.

(6) When the experiment is finished, the liaison will place all of the literature concerning that experiment in an "inactive" or "completed" file. It is seldom necessary to keep all of the literature unless the experiment is likely to be repeated soon. During this time the brochure will have accumulated a full record of the experiment handling and operation. Each person who has the brochure will be responsible for recording any pertinent data so that the next person will have a complete record when he receives it.

4.2b. Safety Procedures for In-Reactor Experiments

For any new experiment to be inserted in the Reactor, there must be assurance that adequate steps are taken to provide appropriate safeguards for the protection of personnel, the experiment, the reactor, and other expensive equipment. The following procedures are to insure that the necessary safety precautions have been taken.

1. Design and Approval of Safeties in the Experiment

   Before any design for experiment instrumentation is started, the person responsible for the experiment should discuss the proposed experiment with the Research Coordinator of the Operations Division. At this time the experimenter will be given copies of

the "Questionnaire for Reactor Experiments" and the "Safety Procedures for Reactor Experiments in the LITR and the ORR". After studying these documents, the experimenter should fill out blank copies of the questionnaire and prepare a preliminary safety circuit diagram. In doing this, he should work with the Research Coordinator of the Operations Division. When the questionnaire and the experiment circuit have been prepared, the Research Coordinator will determine whether the experiment should be submitted to the Experiment Review Committee. In general, this Committee approves the general design or concept of a given safety system. The actual construction should be approved by the I and C Division field engineer. Construction of the experiment instrumentation should not begin until approval of design is obtained.

2. Checking of Safeties Prior to Insertion of Experiment into Reactor

In order to eliminate, insofar as possible, experiments being installed without workable instrumentation, all instrumentation must be checked prior to insertion into the reactor, both initially and before each reinsertion. At any time the experimenter wishes to install a new experiment, the Research Coordinator should be notified at least two days in advance. For reinstallation of a type of experiment that has already operated successfully, the Reactor Supervisor must be notified two days in advance. The Coordinator or the Supervisor, whichever was deemed responsible in the last sentence, will request the instrument field engineer to check out the experiment instrumentation. This should be

successfully checked by 3:00 p.m. the day prior to insertion. If the instrumentation fails to check out properly, insertion should be delayed until a later shutdown.

3. Final Safeties Check While in Reactor.

A final check of the safety instrumentation for every experiment, including all of the alarm, setback, and the scram circuits, must be made after the experiment is in the reactor and attached to the reactor control circuits. These tests are made while the reactor is shut down by simulating the various alarm, setback and scram conditions. Any exceptions to the Safety Procedures for In-Reactor Experiment practices, or to the original conditions of the experiment set forth by the Experiment Review Committee, should be made in writing by the Research Coordinator. Copies of the approval should be sent to the Chairman of the Experiment Review Committee, Superintendent of Reactor Operations Department, Head of the Operations Technical Assistance Department, the instrument field engineer, the reactor supervisor concerned, and the experimenter.

4.2c. Fitting Experiment Access Tubes in the Core

Introduction

Experiment tubes at the ORR enter the reactor tank at the top through experiment access flanges V-1 through V-10. See Figure 4.22. A special rectangular access flange, V-11, is provided for core positions A-1 and A-2.

UNCLASSIFIED
ORNL-LR-DWG 49729

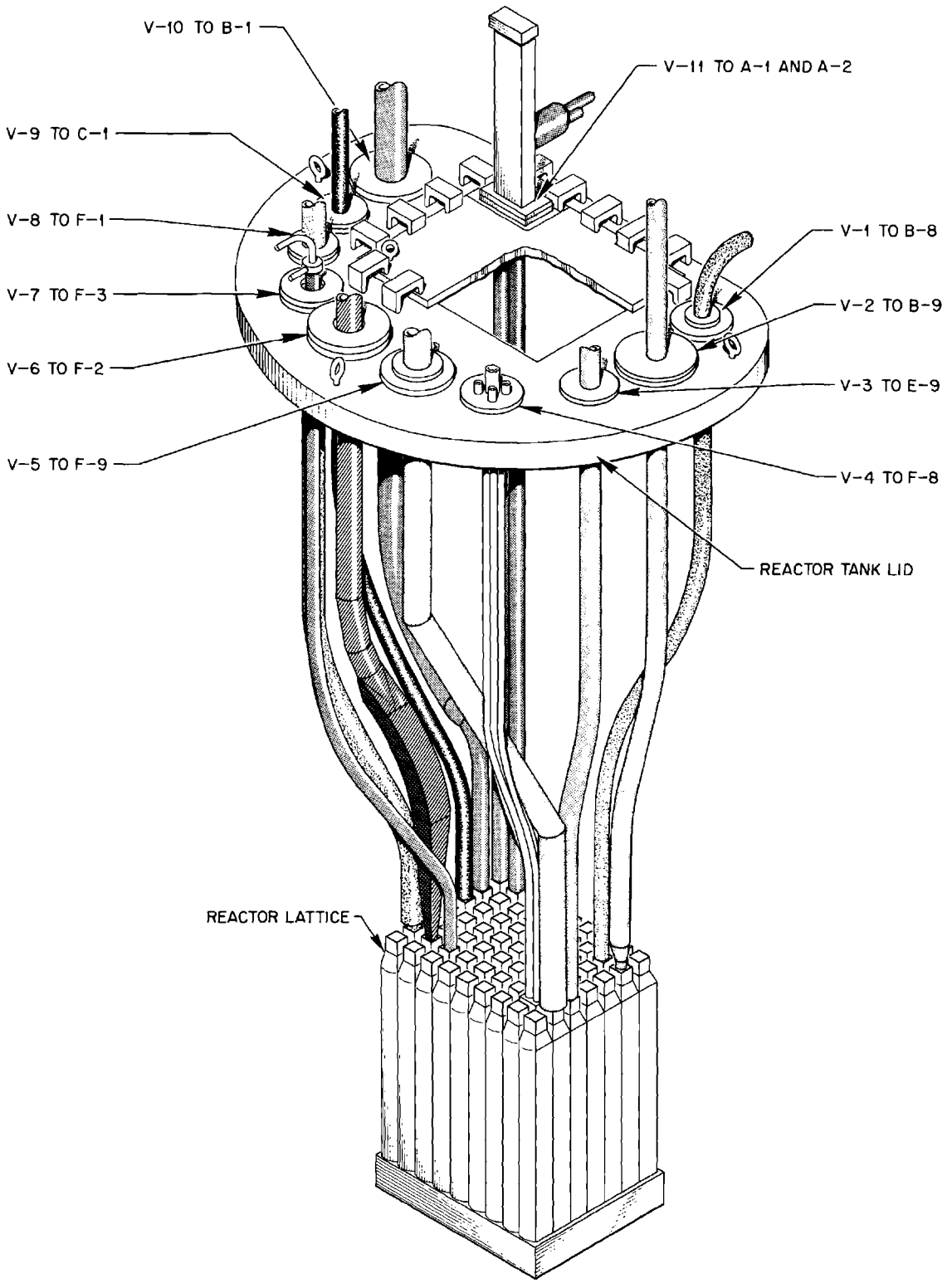

Fig. 4.22. Experiment Access Flanges in Reactor Lid

The positions of the "V" flanges make it necessary to construct the access tubes with complex bends, the complexity depending upon the degree of interference with other experiments. The only advantage of these bends is that internal shielding is usually unnecessary.

The access tubes terminate in the reactor core and, therefore, must fit into standard hollow Be core pieces or be equipped with special core inserts. These core inserts may or may not be an integral part of the access tube.

This procedure will describe the precautions to be followed when inserting an access tube into the core and will list the steps to be followed during the fitting and testing of the tubes.

Preparation for Insertion

1. Core

   Experiment tubes are usually inserted with the water in the reactor pool at the 14 ft or grating level. Preparation of the core requires the handling of radioactive core pieces and, therefore, must be completed in advance of the actual insertion.

   a. Prepare the core position receiving the tube by inserting a hollow Be piece or by removing the fuel, Be, etc., if a special core insert is provided.

      NOTE: The core insert must be the correct size and is to be checked by the supervisor on duty.

   b. Place core pieces (fuel, Be, etc.) in all positions directly north, south, east, and west of the position receiving the tube. For example, should the experiment enter position C-2, then core pieces should be placed in all other "C" positions

and all other "2" positions. This will provide a means of checking the "fit" of the tube.

2. Tank and Pool

   a. Observe and obey Operations and Health Physics rules concerning pool entry.

   b. Lower the water to the grating level.

   c. Remove the blank flange from the proper access port. Determine that the stud bolts around the port are in good repair and properly tightened.

   d. Provide an underwater light for observation inside the tank during the insertion.

3. Experiment Tube

   a. Check the tube for proper dimensions, including the core insert if attached.

   b. Rig the tube so that it hangs vertically from the crane. Use a chain fall or "come along" between the tube and the crane hook since any movement of the tube while in the core must be done manually.

<u>Insertion</u>

1. Core Insert

   If a core insert was not provided by step 1.a. above, then:

   a. Check the new core insert for proper dimensions, and place it in the core.

   b. Determine that the core pieces adjacent to the new insert are neither too tight nor too loose.

c. Determine that the freedom of movement and the locking of the upper bracing assemblies (hold-down arms) is not affected by the core insert.

2. Access Tube

a. Be sure that all dimensions have been checked.

b. Provide radiation surveillance.

c. Using the slow-speed crane, if necessary, lower the tube through the tank to within 6 to 12 in. of the top of the core. Do not strike the core or another experiment with the tube.

d. Manually (using chain fall if necessary) guide the tube into the core insert or into the empty core position.

e. Adjust the tube for the best fit, making use of the special "slip flange" or triple flange if provided. Tighten the nuts securely.

f. Carefully check the core pieces around the experiment for freedom of movement and check the upper bearing assembly for proper operation.

g. Assist E & M personnel with any welding, pipefitting, or other work necessary to complete the installation. Tack welding of the tube to the flange should be made after lifting the tube 3/16 in. from the bottom of the core piece. After the tack welding, the tube should be checked again for proper fit.

h. The unit (flange to tube) can be permanently welded and upon completion should be checked again for proper fit.

Flow and Leak Checks

It is necessary that the experiment tubes be checked for leaks or excessive vibration which could result in damage to the reactor or its personnel.

1. Prepare the core for normal flow in accordance with the existing procedure.
2. Replace the reactor tank access cover.
3. Perform the startup checks pertaining to water flow.
4. Start the reactor water flow, and gradually increase the rate while checking the experiment tube for vibration. The tube can be seen through the plastic viewing window.
5. Check for water leaks at the access port.

Removal

The removal procedure is essentially the reverse of the insertion procedure except for the induced radioactivity of the tube which must be considered. A step-by-step outline is given below.

1. Removal from Core
   a. Manually raise the experiment tube (core insert included if applicable) until it is clear of the core. Use a chain fall or other manually operated lifting device if necessary.
      NOTE: Health Physics surveillance should be utilized whenever practicable.
   b. Prepare the tube for removal from the tank by providing ropes or attaching to the crane if such has not already been done.
   c. Raise the water level in the reactor pool, lifting the experiment carefully as shielding is provided.

2. Store the experiment in the pool storage area and tag it properly.
3. When removing an experiment from a "dry" experiment tube the following rules should be followed:
   a. Off-gas should be made available.
   b. When possible, experiment leads, thermocouples, etc., should be pulled into a container, such as tygon tube, which is attached to the building off-gas system.
   c. Upon the removal of the experiment from the reactor to the shield, the shield should be covered with plastic to prevent the spread of any contamination which may have collected on the shield.
   d. The operation should be carried out under the direct scrutiny of a health physicist.

4.2d. Experiment Pre-Operational and Shutdown Checks

Prior to reactor startup, all new experiment installations must be thoroughly checked to insure that the materials, workmanship, and components meet the safety requirements for the experiment and that all pre-installation requirements such as pressure and leak testing, weld X-rays, etc., have been met. In addition, it is necessary to check each safety monitor to establish that it will perform the necessary corrective or preventive action as stipulated in the experiment approval. This initial prestart check is made by both the Reactor Operations Department engineer following the experiment and the reactor supervisor. Subsequent startup checks are generally done as a part of the reactor startup checks. Although the initial experiment inspection and checkout is quite thorough,

it cannot insure that all safety instruments and components will continue to function properly throughout the experiment life time. It is necessary therefore that prestart checks be made on all experiments following any extended reactor shutdown, and/or experiment maintenance or revision.

The performance of a complete and thorough prestart check of all safety channels on all experiments in the reactor immediately prior to reactor startup is prohibitively involved and time consuming. Therefore, it is necessary to proceed as follows:

1. Pre-Operational and Shutdown Checks

   a. A complete check sheet should be made up for each experiment prior to the initial experiment checkout. The check sheet should list each safety instrument, the property that it is monitoring, and trip-point settings for alarms, setbacks, and scrams. In addition, any equipment, utility supply, etc., which is vital to the safe operation of the experiment should be listed with headings for the proper checks to be made.

   b. The experiment safety-instrument portion of the check list should be completed, dated, and signed by an instrument engineer designated by the reactor supervisor. Any unusual conditions such as erratic instrument indications, unreported or unauthorized changes in safety instrumentation, etc., should be noted on the check sheet and brought to the reactor supervisor's attention.

   c. Safety features or equipment other than instrumentation should be checked by the reactor supervisor or by some other qualified person designated by him.

d. During an extended shutdown, those experiments requiring no maintenance or alteration may be checked at any time prior to startup. If any alteration or adjustment becomes necessary on any safety equipment following the safety checkout, a new check list must be completed for that equipment. Other experiments may be checked as soon as all equipment shutdown work affecting safety has been completed. New experiment installations will probably require a checkout immediately prior to, and possibly during, startup.

e. Some variation in the check sheet may be required in order to cover special features of some experiments. However, for general usage, a form similar to that shown in Example 4.2 should be adequate. The reactor supervisor is responsible for the checkouts and will maintain a file of completed check sheets.

4.2e. Coverage of Experiments by Operations Division Personnel

In order to ensure that unmanned research experiments are covered efficiently, safely, and expediently by Operations Division personnel, it is essential that all personnel be properly informed and that operational changes be relayed from one shift to the next. The following procedure summarizes the coverage of research experiments and the general steps to be taken in the event of difficulties.

1. Experiment Instruction Sheet

   A notebook is provided for all written instruction. In addition to the usual information supplied by the experiment sponsor, the

EXPERIMENT SAFETY CHECK SHEET

Experiment_____ Checked by_____

Reactor & Facility_____ Date Checked_____

Instrumentation:

Instrument Identification	Property Monitored	Trip Points			Battery Condition	Comments
		Alarm	Setback	Scram		

Example 4.2.

"Experiment Information Sheet", Example 4.3., will be filled out by the Research Coordinator or someone delegated by him to summarize the experimenter's instructions. These instructions must be up to date at all times and reviewed each week. If special instructions are made by an experimenter on the 4-12 or 12-8 shifts, the shift engineer will put them in the proper notebook position and leave a notice in the log book that additional instructions or changes in instructions have been received (log under Services to Research). Otherwise, all instructions from the experimenter must be presented to the Reactor Supervisor for review before being put into the notebook. When an experiment facility is not in use, the instructions will be removed from the notebook and filed by the research supervisor or someone delegated by him. The supervisor is to check all instructions at the beginning of each shift for any changes. He should then give these instructions to all operators concerned.

2. Alarms or Scrams from Research Experiments

If an alarm should occur, the experiment must be checked for verification that the alarm is a real one; and if so, the experimenter should be notified. If a setback or scram from an experiment occurs, the reactor must be left down until the trouble has been eliminated. Again, the person responsible for the experiment should be notified and, if necessary, asked to help repair the trouble. The special instructions on the "Experiment Information Sheet" should always be checked when trouble occurs with an experiment.

EXPERIMENT INFORMATION SHEET

Date	Checked By

Experiment Location: Reactor _____ Date Inserted _____

Facility _____

Expected Duration of Experiment _____

Brief Description of Experiment _____

_____

_____

Whom to Notify in Case of Trouble:

Name	Business Phone	Home Phone

Special Startup Instructions _____

_____

_____

What to do in the event of an accidental shutdown _____

_____

_____

_____

What services (Gas, Steam, Casks, etc.,) are required for this experiment _____

_____

_____

TX-2428 (9-60)

Example 4.3.

What to do in the event of power failure _____

_____

_____

Notify experimenter before scheduled shutdowns? _____

Special check or readings to be made _____

_____

_____

POSSIBLE TROUBLES:

Signal Response	Caused by	What to do
Alarm only		
Alarm and Setback		
Alarm and Scram		

Any other instructions _____

_____

_____

_____

_____

Example 4.3. (continued)

3. Emergency or Accidental Shutdowns of Reactor

If an emergency or accidental shutdown should occur or a change in reactor power is required, not necessarily due to a research experiment, the "Experiment Information Sheet" should again be checked and the proper notifications made; however, if the reason is known for the shutdown and the abnormality has been cleared, the reactor should be brought back to the original operating range and then notification be given to the research personnel. The research experiments should be checked for any abnormalities.

4. Notifications to Research Personnel Prior to Utilities Shutdown

The research experiments rely upon a continuous supply of utilities, water, electrical power, off-gas, etc., whether the reactor is operating or not. Reactor Operations personnel should acquaint themselves with these utilities and the adjustments to be made to the equipment. When a shutdown of utilities is required, even though the reactor may be shutdown, research personnel using the utilities involved should be notified as soon as possible.

4.2f. Rules and General Information on Handling Experiment Safety Instrument Failure

Experiment instrument failure must be handled, whenever possible, safely and rapidly to minimize the loss of reactor operating time and to avoid reloading the core. It should be recognized that reactor experiments have been approved with a minimum of safety instrumentation; however, under certain conditions it is feasible to block or disarm one channel of a dual-tracked safety, provided it is definitely established that the experiment is functioning normally and that the trouble stems from a failed instrument.

1. Coverage of Experiment Instrument Failures

The following are some general rules and conditions covering experiment instrument failures.

a. An experiment E-panel switch must never be turned to the "test" position while the experiment is "in-reactor". Some experiments are designed to be retracted under abnormal conditions; however, this does not mean that the experiment is sufficiently retracted to be considered "out-of-reactor". The condition, if any, under which an experiment E-panel switch may be turned to "test" will be given on the "Experiment Information Sheet".

b. Conditions under which certain instruments may be blocked out will be listed on the "Experiment Information Sheet". If insufficient information is given, contact the reactor supervisor for advice as to what action should be taken.

c. If an approved method for disarming or blocking a failed instrument cannot be found, the reactor must be shut down rather than turn the E-panel switch to "test".

d. If it becomes necessary to block an experiment recording instrument, this usually can, and may, be done by turning the recorder "on-off" switch to the "off" position and then driving the pointer down scale to clear the alarm condition.

e. When an instrument failure has occurred, the initial action should be to block the instrument, retract the experiment if possible, and start the reactor. After the reactor has been brought back to power, the experimenter should be notified and appropriate steps taken to repair the instrument.

f. If, of course, it is not obvious that an instrument failure has occurred, sufficient time must be taken to resolve the difficulty with the equipment. This may lead to reloading the core since several telephone calls will probably be made and the experimenter may want to check the experiment personally before the reactor is started again.

g. Prior to making calls regarding an experiment failure, the shift engineer should make a thorough check of all of the experiment instrumentation, noting any abnormal conditions. This may prevent subsequent telephone calls.

h. Safety set points must not be adjusted to avoid safety action by an instrument.

i. If the position of an experiment in the reactor has been changed, it may be advisable to change the set points. This, however, must not be done without permission from the experimenter and someone from the Operations Technical Assistance Department.

j. Special instructions given on the "Experiment Information Sheet" will supersede any general rule if there is any conflict in instructions. The purpose of this procedure is to emphasize the importance of handling instrument failures in a safe but rapid fashion. In order to do so, the shift engineers must familiarize themselves with all experiments associated with the reactor safety system. It is suggested that the shift engineer familiarize himself with the blockout possibilities and other phases of each experiment as soon as

it is installed rather than wait until troubles develop and then have to read and decide about corrections at a furious, and possibly dangerous, pace.

4.3. Radioisotope Production

References

ORNL Drawings D-27313-A, D-27314-A, D-29288, D-29293, D-29294, D-33574, and D-43624

4.3a. Introduction

Radioisotope production in the ORR has increased rapidly in the number of units irradiated and has become an important function of reactor operations. The increasing demand has required improvement in the irradiation facilities and an efficient and accurate procedure for handling these isotopes. The following procedures are to govern radioisotope production to ensure safe handling and more efficient customer service.

4.3b. Inspection of Samples

The reactor supervisor will personally inspect each sample before it goes into the reactor. The only exceptions will be samples from the Isotope Division. This inspection is not to be of just the container but must be of the material inside. The supervisor will look for anything odd and will see that the description in the sample book is correct. The supervisor will check uranium targets most carefully.

In order to insure that this inspection is made, the samples will be delivered to the reactor supervisor from the person doing the scheduling. It will be the responsibility of the supervisor to see that the samples are taken to the Control Desk after his approval.

The approval of the Department Head of the Operations Technical Assistance Group is required for the insertion of any uranium sample into the ORR.

4.3c. Radioisotope Targets Used in the ORR Hydraulic Tubes

The hydraulic-tube facility located in core position F-8 is assigned for usage to two groups--Isotopes Division for isotope productions and Solid State Division for research. The current assignment is as follows: tubes No. 11, 13, and 14 are assigned to Isotopes Division; and tube No. 12 is assigned to Solid State Division.

To effectively protect Operations' interest, all samples which are scheduled for irradiation are inspected by the ORR supervisor to assure that the contents meet the requirements on heat production, gas pressure buildup, weight, etc. Samples irradiated on a routine schedule must have the approval of the reactor supervisor or his designated alternate; however, other samples and all fissionable materials must be authorized by a member of the Operations Technical Assistance Department.

Weight limitations on samples for the hydraulic tubes, based on hydraulic forces to push the samples, are restricted as follows:

Large tube--150 grams

Small tube--150 grams

It is the responsibility of the ORR supervisor and/or the shift engineer to comply with the above limitation so that the usefulness of this facility and the ORR project will not be jeopardized.

4.3d. Thermal Neutron Fluxes

The isotope trays, fabricated from 2S Al, are located in core positions C-2, F-5, and A-8. The trays are contained in the regular hollow beryllium core reflector pieces where 85% of the samples are 3/8 in. from the beryllium wall, and the remaining samples are centered in the 2-in.-diameter hole. All samples are water cooled.

Thermal neutron fluxes for the C-2 and F-5 core positions are indicated in the following table.

Table 4.1. Thermal Neutron Fluxes

Stringer No. 1 Core Position C-2		Stringer No. 2 Core Position F-5	
Tray & Position	Flux (10^{14})	Tray & Position	Flux (10^{14})
Q-8	0.443	Q-6	0.662
R-6	0.837	R-8	1.57
-	-	R-3	1.62
S-8	1.67	S-8	2.58
T-8	2.20	-	-
U-2	3.02	-	-
V-6	3.20	V-2	5.21
W-4	2.93	W-1	4.62
X-8	2.89	-	-
Y-6	2.27	Y-8	3.49
-	-	-	-
Z-8	1.62	Z-6	1.93
-	-	Z-8	1.99

4.3e. Identification of ORR Irradiation Samples

In order to give efficient service to all customers, it is imperative that the exact location of all samples be known at all times. To accomplish this, each sample submitted for irradiation will be assigned a number as follows:

1. Capital letters in alphabetical order will designate the operating year and Arabic numerals will designate the month during which the sample is inserted into the reactor.
2. Samples irradiated during each month will be numbered consecutively beginning with (1) for the first sample each month. A dash will separate this number from the preceding month identification number.
3. For example, the first sample number to be assigned in May, 1958, was A-5-1, the second A-5-2. The first sample assigned in January, 1962, was E-1-1 indicating the first sample in the first month of the fifth year of operation.
4. The numbers shall be clearly etched with a vibrator so that difficulty in identifying samples after irradiation will be minimized.

4.3f. Irradiations in Core Positions C-2, F-5, and A-8.

Core positions C-2, F-5, and A-8 are presently being used for irradiation of samples. Positions C-2 and F-5 each contain an isotope stringer, Figure 4.23, which will accommodate eighty 3/8-in.-diameter samples. A-8 will accommodate sixty 1/2-in.-diameter samples. Figure 4.24 is a copy of the isotope stringer sheet used for C-2 and F-5. Figure 4.25 is used for isotopes in core position A-8. The scheduling of isotopes into and out of each stringer is shown on these forms. The sample numbers of materials going in are written in blue in the proper position. Isotopes coming out are entered in red in their position. On Figures 4.24, 4.25, and 4.26, an asterisk is used to identify those samples going in. As the work is done, a check mark is placed against the sample number affected.

Fig. 4.23. Radioisotope Stringer

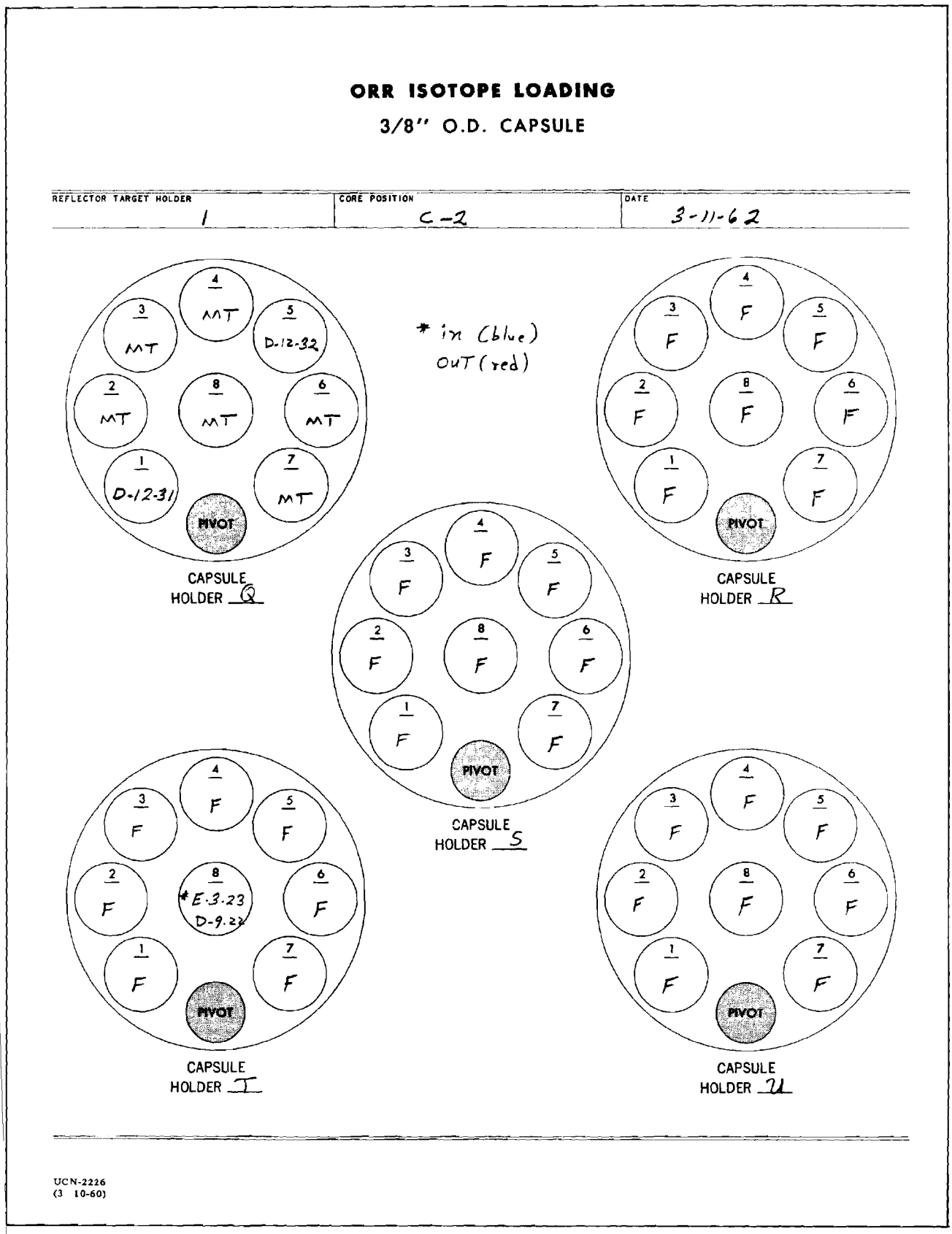

Fig. 4.24. ORR Isotope Loading, C-2

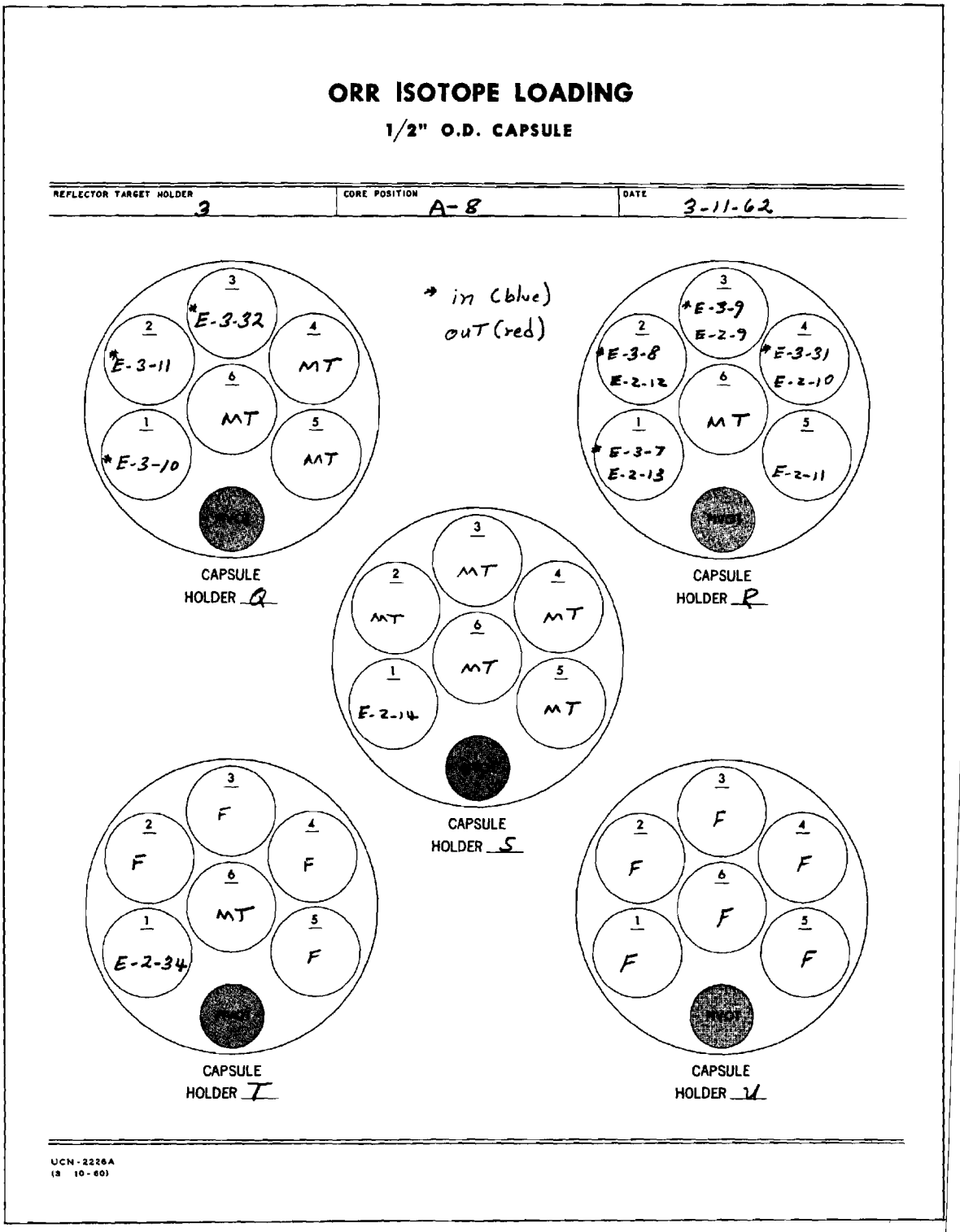

Fig. 4.25. ORR Isotope Loading, A-8

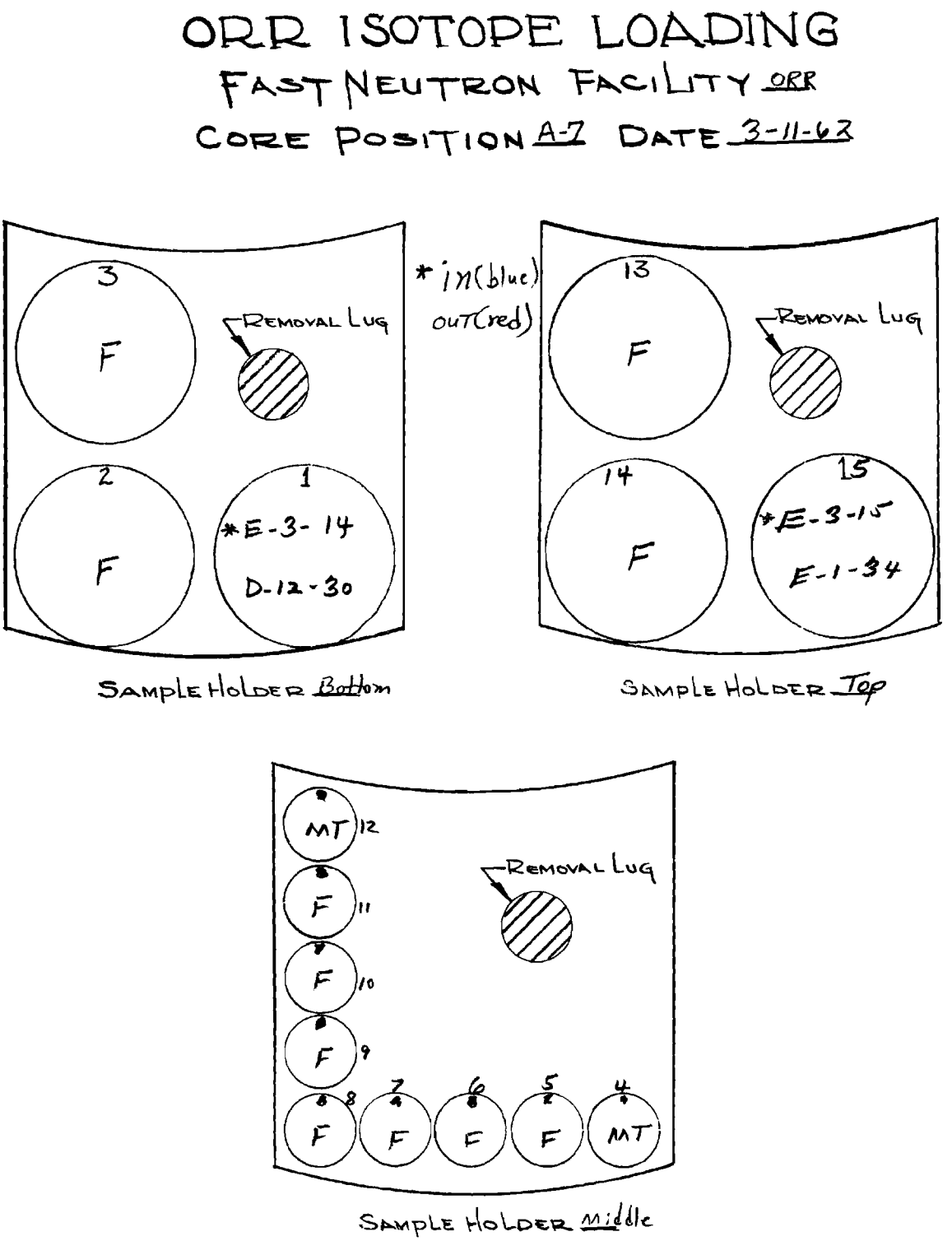

Fig. 4.26. ORR Isotope Loading, A-7

When all isotope work has been finished, an inventory of the remaining empty holes is made. The empties are indicated by marking the corresponding positions on the work sheet with "MT".

In removing radioisotopes from the reactor, each element containing an isotope stringer is removed from the core and taken to the isotope tray. The isotope stringer is then removed and placed in the position provided on the isotope tray where the necessary sample removal and inventory is performed. After each individual isotope stringer is worked, the samples are identified and any errors are corrected before the stringer is replaced in the core. After all isotope stringers have been processed, the isotopes are loaded into carriers and shipped as requested by the customer.

4.3g. Irradiation in Core Position A-7, Nf Tray

Core position A-7, Figure 4.26, used for the fast neutron tray, is where larger samples can be accommodated. Scheduling and processing is performed in the same manner as the isotope stringers in C-2, F-5, and A-8.

4.3h. Precautions for the Handling of Carriers in the ORR Pool

Carriers should not be lowered into, or lifted over, the reactor pool. Carriers should be received and dispatched through the west door. This permits a shorter lift by the crane in addition to eliminating the temptation to move the carrier over the reactor pool while moving it into loading position in the center pool.

1963

5. ORR WATER COOLING SYSTEM

5.1. Introduction

There are two distinct, yet integrated, parts of the ORR cooling system. The first, the reactor cooling system, Figure 5.1, consists of the reactor tank and all of the auxiliary equipment required to circulate the cooling water and maintain it in good condition. The second, the pool system, Figure 5.2, consists of three large pools and all of the auxiliary equipment required to cool the water in the pools and to keep it in good condition.

In the first system, the heat generated in the reactor is eventually dissipated to the atmosphere. Reactor cooling water which flows through the core removes heat from the fuel elements and undergoes a temperature rise. A temperature drop of approximately the same magnitude occurs when the primary water flows through the heat exchangers and transfers its heat load to the reactor secondary cooling system. The secondary system then dissipates the heat to the atmosphere by evaporating water in a cooling tower.

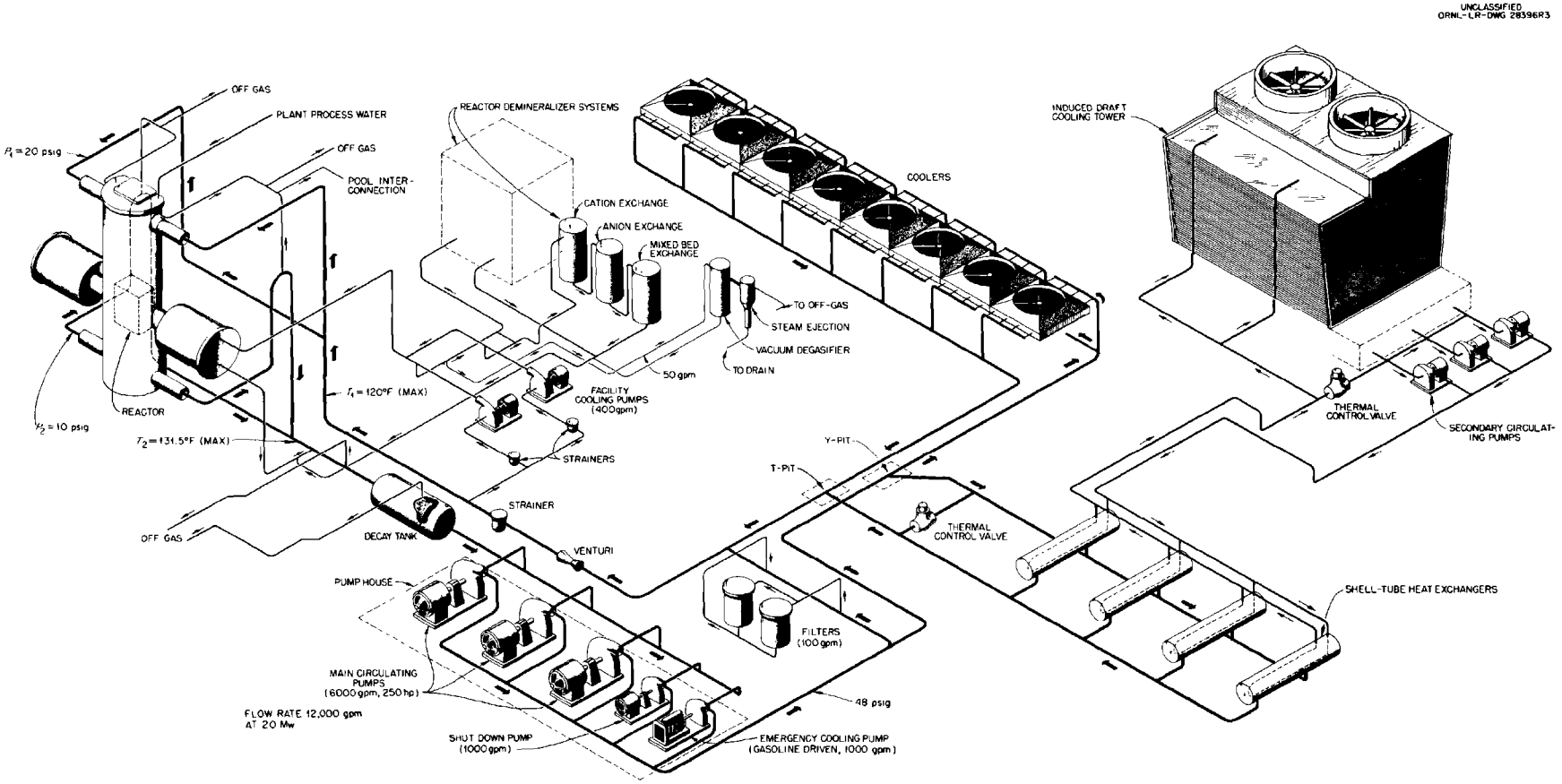

Fig. 5.1. Reactor Cooling System

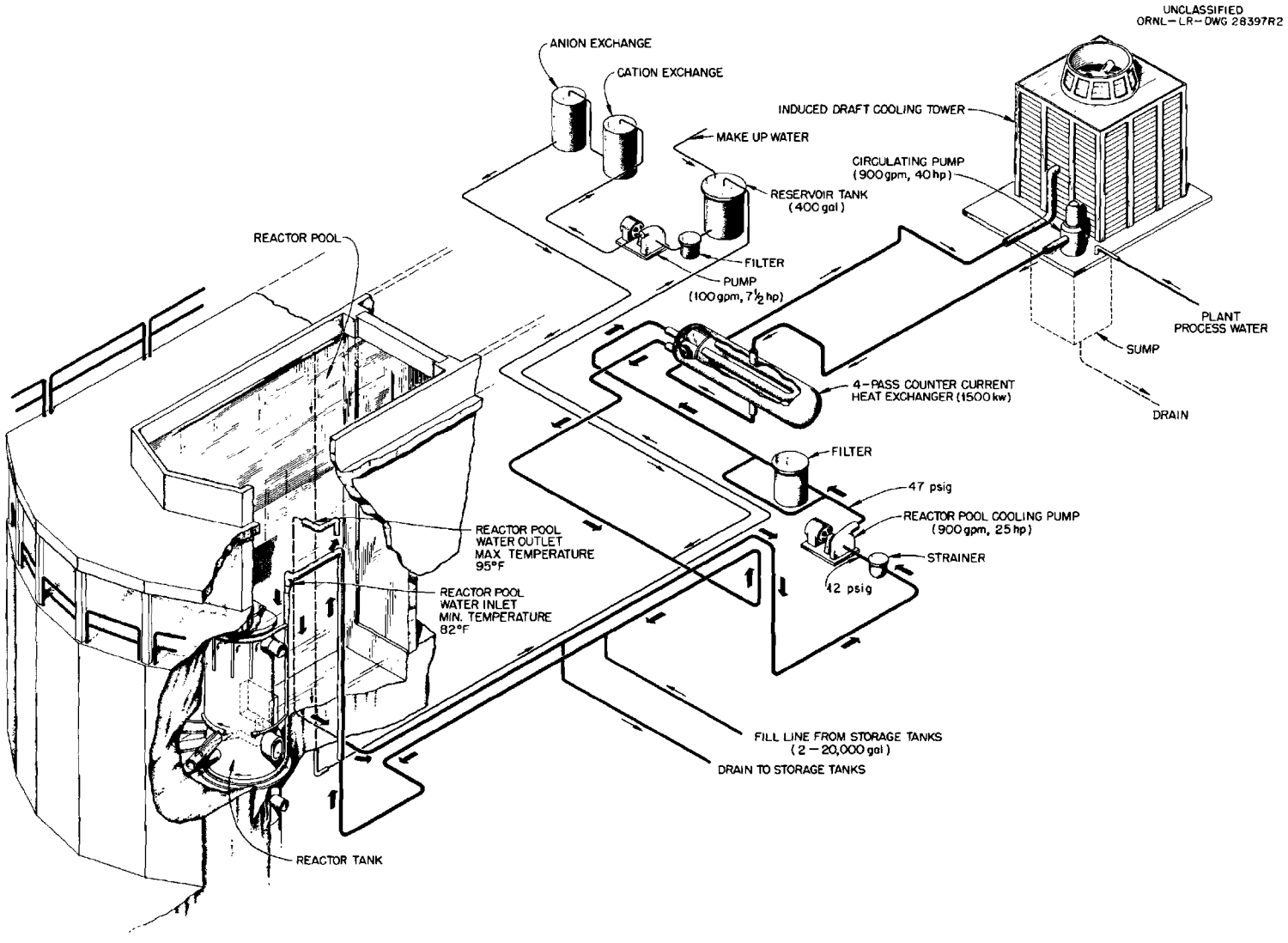

Fig. 5.2. Reactor Pool Cooling System

5.2. Reactor Primary System

References

D-44117 and D-44118

5.2a. Description of the System

The reactor tank is located in the east pool about 15 ft below the level of the pool water. Demineralized water enters the reactor tank, through 18-in. pipes, near the top of the tank. The rate of entry is 18,000 gpm when the reactor power is 30 Mw. This water flows down through the core, cooling it. The downward motion of the water helps to seat the fuel elements and does not oppose the scramming mechanism.

Water flows out of the bottom of the tank through two 18-in. pipes. These pipes run into the concrete shielding, turn west until they are beyond the large facility holes, then turn upward. They continue up in the concrete shield until they are above the level of the fuel lattice; then, they make a 180° turn and go to the basement. A pipe leading to a ball-float trap is tied into each of the 18-in. pipes at the top of the 180° bend to destroy any syphoning action when the water level in the tank is equal to the level of the bend. This level is above the fuel lattice; consequently, the tank cannot be syphoned dry, Figure 5.3.

The two 18-in. exit lines proceed to the pipe chase in the basement where they join a common 24-in. line. This line runs out of the basement, increases to a 36-in line, and proceeds in a northeasterly direction for several hundred feet. It changes size once more, back to a 24-in. line, before entering a 10,000-gal decay tank. The purpose of the tank is to delay the water for short periods to allow any N^{16} that may be present to decay.

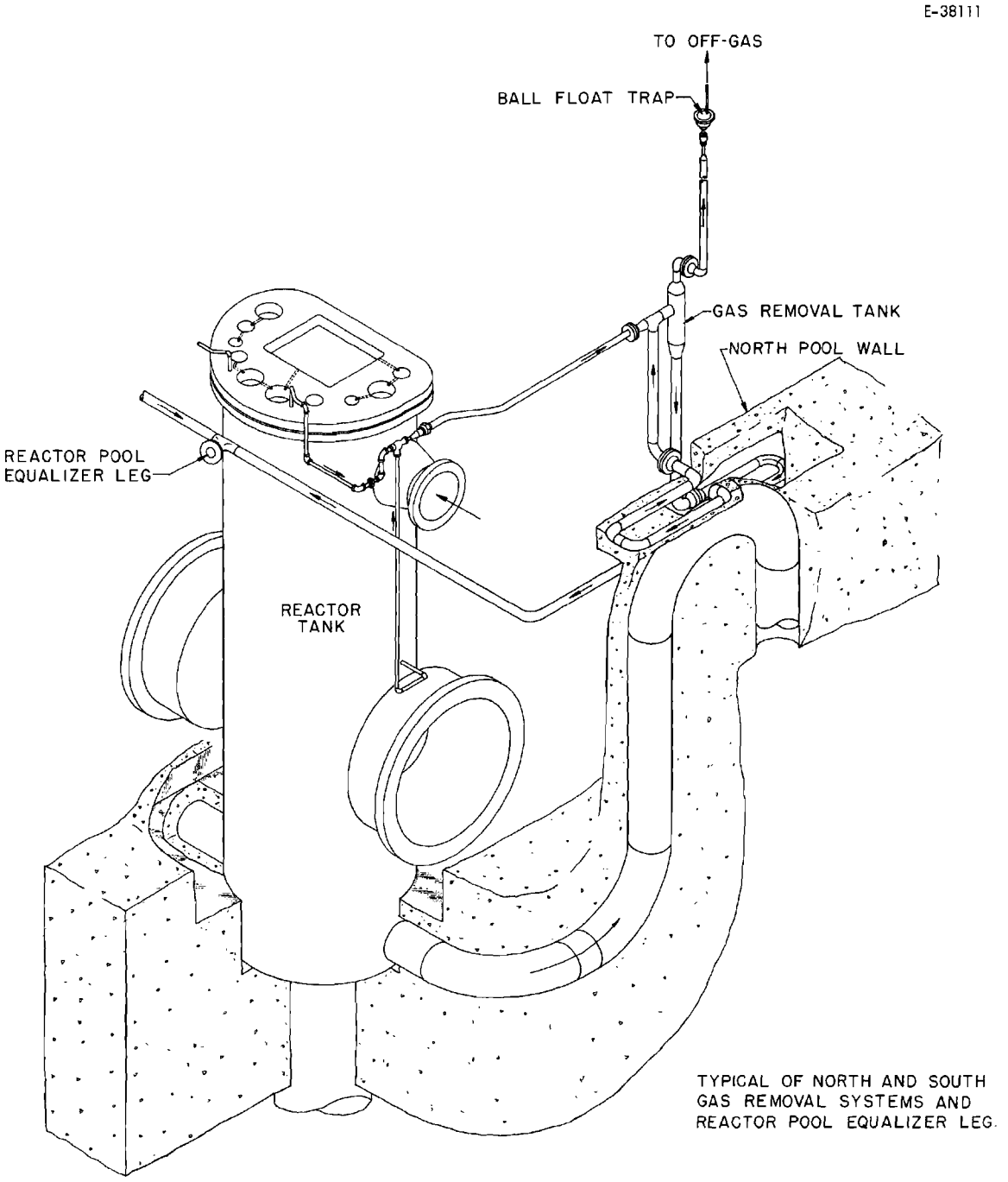

Fig. 5.3. Gas Removal System of ORR

After leaving the decay tank, the water proceeds through a 24-in. line to the pump house. About three-fourths of the way under the pump house, the 24-in. line becomes a manifold which feeds three 16-in. lines and two 8-in. lines. Each of the 16-in. lines leads to the inlet of a 6000-gpm pump. These pumps provide the power to circulate the cooling water through the system. There are d-c. pony motors directly coupled to the 6000-gpm pumps which continue rotation of the pumps, during a power outage, to provide after heat cooling. The operation of the d-c. units is described in a separate section of this manual.

The two 8-in. lines leaving the manifold are for emergency cooling. One of these goes to a 1000-gpm electrically driven pump which is used to provide after heat cooling. The other line goes to a 1000-gpm gasoline motor driven pump which provides additional after heat cooling water in support of the d-c. units during a power outage.

The normal procedure for the shutting down of the main pumps shall be: first, to close the motorized valves on the discharge of the pumps; second, de-energize the pump motor. In no event should the pump motor be de-energized before reducing the flow.

The discharge from the main pumps travels through a 24-in. line under the north wall of the pump house where it branches into two lines. One line continues north to the eight water-to-air heat exchangers used under the former 20-Mw operation. This system remains for emergency service and may allow higher reactor power levels in the future.

The other line travels northeast to the heat exchanger pit, Figure 5.4. Here the heat generated in the core is transferred from the primary system to the secondary system by means of four stainless steel, shell-and-tube

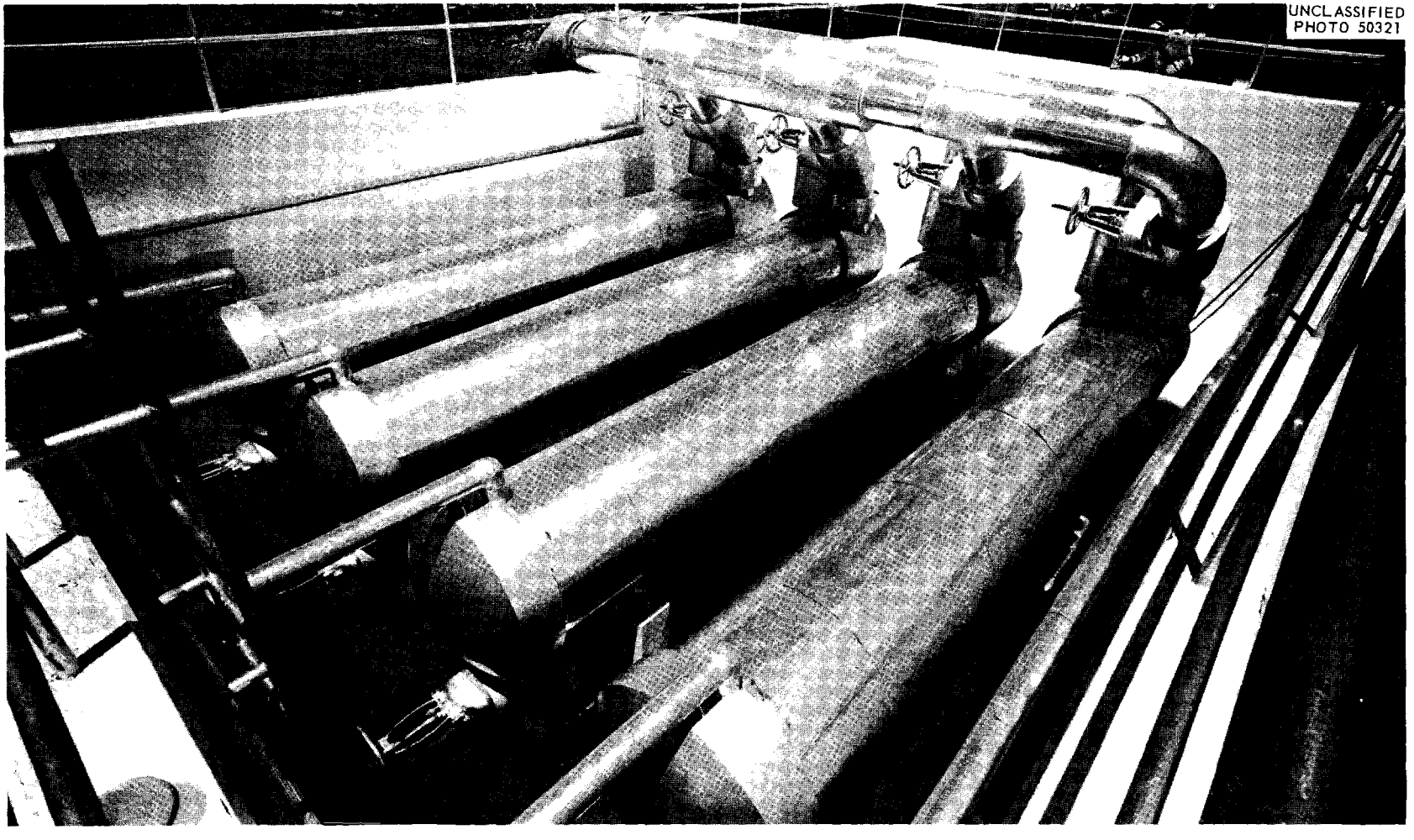

Fig. 5.4. Heat Exchanger Pit

heat exchangers, connected in parallel. The reactor cooling water passes from east to west through the shell side of the exchangers.

A 24-in. wafer type, butterfly control valve with an air motor positioner is installed in parallel with the four heat exchangers. This valve allows a portion of the cooling water to bypass the heat exchangers, depending on the cooling demand.

After leaving the heat exchanger-bypass valve arrangement, the water flows through a single 24-in. line back toward the pump house converging with the discharge line from the water-to-air heat exchangers. The line then turns south under the porch of the pumphouse. A venturi in this section allows the flow to be monitored in the control room. The line then proceeds southwest and enters the pipe chase where it branches into the two 18-in. lines that carry the cooling water through the concrete shield and up to the reactor inlets.

Two large storage tanks, located southeast of the pumphouse, are connected to a 300-gpm fill and drain pump in the basement of the ORR. Although it may seem otherwise, when these tanks are full, they provide a positive head on the suction leg of the 300-gpm pump. As will be shown in the procedures, there are a great number of ways that these storage tanks may be used to assist in filling or draining either the reactor or pool primary system.

5.2b. Draining the Reactor Primary System To Storage Tanks

Some preliminary comments must be made about the reactor primary system. It is so constructed that most of the water cannot be gravity

drained to the storage tanks. There are two reasons for this: 1) Only the air-cooled heat exchangers and the reactor tank have elevations above that of the entrance to the storage tanks. 2) There is a syphon-breaking device on the exit line from the reactor tank at a level above the top of the lattice. Since the air coolers are on a standby basis for possible higher power operation in the future, they must be drained whenever the level in the reactor tank is lowered. The following procedures are for doing these two things:

1. Draining the air coolers
   a. Close valves 110b, 106b, 163b, 161b, 156b, 148b
   b. Open valves 109a, 104a, 110a, 149a, 150a, 692a, 603a, 604a, 605a, 606a, 607a, 608a, 609a, 610a, 612a, 115a, 115c, 109b, 109Xa.
   c. Open the vents on either side of each air cooler.
2. Lowering the reactor tank water level.
   a. Open valves 147a, 148b, 158a, 159b, 160a, 161b, 162a, 163b, 101a, 106a, 109a, 109b, 109Xa.
   b. Close valve 115b.

It is obvious that both procedures may be followed concurrently.

NOTE: The reactor water level can be lowered only when the reactor pool level is down to the ultimate level of the reactor water level. If the reactor pool is not lowered and procedure 2 is followed, water from the pool will flow through the equalizers to the reactor tank.

To Retention Ponds

This procedure is the same as that for draining to the storage tanks, with the following exceptions:

1. Close valves 109a, 109b, 109Xa.
2. Open valve 503a.
3. One other exception is to note that the elevation of the retention ponds is lower than that of the storage tanks; therefore, water can be drained faster.

Draining to the Sump

The lowest point in the system is located on the floor of the pipe chase. The large lines between the decay tank and the pipe chase will remain full after using procedures (1) and (2). Small valves have been placed in lines No. 110 and No. 101 on the floor of the pipe chase. When open, these valves will drain the reactor lines, through a drain in the floor of the pipe chase, to the sump.

The pipe chase is entered through the south side of the reactor substructure in the basement of Building 3042.

The procedure for draining is as follows:

1. This operation requires the presence of a member of the Health Physics Division. He will determine the necessary precautions to be taken.
2. Remove the shielding at the entrance to the pipe chase.
3. Descend and, using the handrail, walk across the west 18-in. line (No. 110) about 15 ft. Open the 1 1/2-in. valve protruding west from the bottom of line No. 110.
4. A similar valve exists in the same position of the east 18-in. line (No. 101) and is to be opened also.
5. These two 1 1/2-in. valves will drain the reactor cooling lines.
6. After cooling lines have been drained, close the two valves.

7. Replace the shielding at the entrance to the pipe chase.

   NOTE: This procedure is to be followed only after the decay tank has been emptied, by pumping with a sump pump, and after the air coolers have been drained.

Draining the Shell-and-Tube Heat Exchangers

At times it is necessary to drain the shell-and-tube heat exchangers for routine or emergency maintenance. Prior to draining the primary side, water counts should be taken in order to decide where to dump the water. Health Physics and the Tank Farm operator should be notified of the activity and volume involved (some 2500 gal for all four exchangers; some 10,000 gal for exchangers plus pumps and lines). Revisions are planned to allow draining the primary side to the retention ponds or storage tanks if desirable. Should this be necessary now, a 1 1/2-in. flanged hose may be attached to each drain, in turn, and the water drained into the ponds (through a gasoline driven pump if necessary). As of this writing, there is no simple means of draining to the storage tanks.

Two 1 1/2-in. drain lines are provided for draining the primary side of the exchangers. The valves, 520a and 529a, are located on the south wall of the heat exchanger pit, three feet above floor level. The drain lines go beneath the floor level and attach directly to the inlet and exit 24-in. primary coolant lines. Opening these drain valves will drain the primary water to the level of the 8 primary coolant cut-off valves (inlet and exit on the four heat exchangers). Procedures are as follows:

1. Close valves:
   a. 110e, 24-in. return line in the strainer pit
   b. 147a, 158a, 160a, 162a, 101a on suction sides of the five primary pumps

2. Open valves:

   a. 121a, 122a, 123a, 124a, 125a, 126a, 127a, 128a on inlet and exit sides of heat exchangers

   b. The vent valve on each exchanger at the west top, then:

   c. Open 520a and 529a--This allows the water to drain from the exchangers to the floor drains and thence to the creek.

NOTE: A 3-in. valve some 12 ft from the creek end of the drain should normally be opened. This valve is located on the west side of the creek under HB-6 flight tube. When the water is drained from the exchangers, the 8 cut-off valves should then be closed.

5.2c. Filling the Reactor Primary System

Filling the Reactor Tank

When filling any part of the reactor primary system the pools are a convenient and quick source of supply. One may then fill the pools by a number of available methods. Before any filling is begun, it should be ascertained that the water is sufficiently above the grating level to complete the filling without undue draining of the reactor pool. The ultimate situation exists when the reactor pool is completely full before any filling is attempted. If the dam is in place between the reactor pool and the remaining two pools, which is usually the case when major work is performed, the fill-and-drain pump is used to keep the reactor pool supplied with more water as the filling proceeds. This can be done by making the valve changes listed on the next page.

1. The following valves should be closed:

   209a, 4-in. gate valve, north bank in basement

   502a, 4-in. gate valve, north bank in basement

   228a, 3-in. gate valve, north bank in basement

   204b, 4-in. gate valve, north bank in basement

   219b, 4-in. gate valve, suction line of the fill-and-drain pump

   217a, 4-in. gate valve, north bank in basement

   227b, 3-in. gate valve, north bank in basement

   216b, 3-in. gate valve, north bank in basement

   208a, 4-in. gate valve, south bank in basement

   205c, 4-in. gate valve, south bank in basement

   207a, 4-in. gate valve, south bank in basement

2. The following valves must be opened:

   204a, 2-in. gate valve, north bank in basement

   206a, 2-in. gate valve, north bank in basement

   218a, 4-in. gate valve, north bank in basement

   143a, 4-in. gate valve, south bank in basement

   205b, 4-in. gate valve, discharge line of the fill-and-drain pump. This valve is not to be opened until the pump is started. It is used to throttle the flow to the desired rate.

3. After the desired amount of water has been obtained for the reactor system, stop the pump and return the valves to their normal position.

If the reactor system should require additional water, the storage tanks provide an obvious source of supply. The fill-and-drain pump is used to move the water from the storage tanks to the reactor system by way of the reactor pool. This is done in the following manner:

1. Estimate the amount of water needed for the reactor system.
2. Check the storage tanks to see if this amount of water exists, Figure 5.5. If it does not, an additional source must be used. NOTE: Do not pump the storage tanks dry because the pump will cavitate and damage may result.
3. The following valves must be closed:

   218a, 4-in. gate valve, north bank in basement

   217a, 4-in. gate valve, north bank in basement

   227b, 3-in. gate valve, north bank in basement

   216b, 3-in. gate valve, north bank in basement

   208a, 4-in. gate valve, south bank in basement

   205c, 4-in. gate valve, south bank in basement

   207a, 4-in. gate valve, south bank in basement
4. The following valves must be opened:

   220a and/or 219a, at the storage area

   219b, 4-in. gate valve, suction line of the fill-and-drain pump

   143a, 4-in. gate valve, south bank in basement

   205b, 4-in. gate valve, discharge line of the fill-and-drain pump

   NOTE: This valve is not to be opened until the pump is started. It is used to throttle the flow to the desired rate.
5. After the desired amount of water has been obtained for the reactor system, stop the pump and return the valves to their normal positions.

Reversal of the draining procedures will usually work in filling the various components. In general, the reactor pool should be full if possible; in any case, it should contain sufficient water to fill the desired

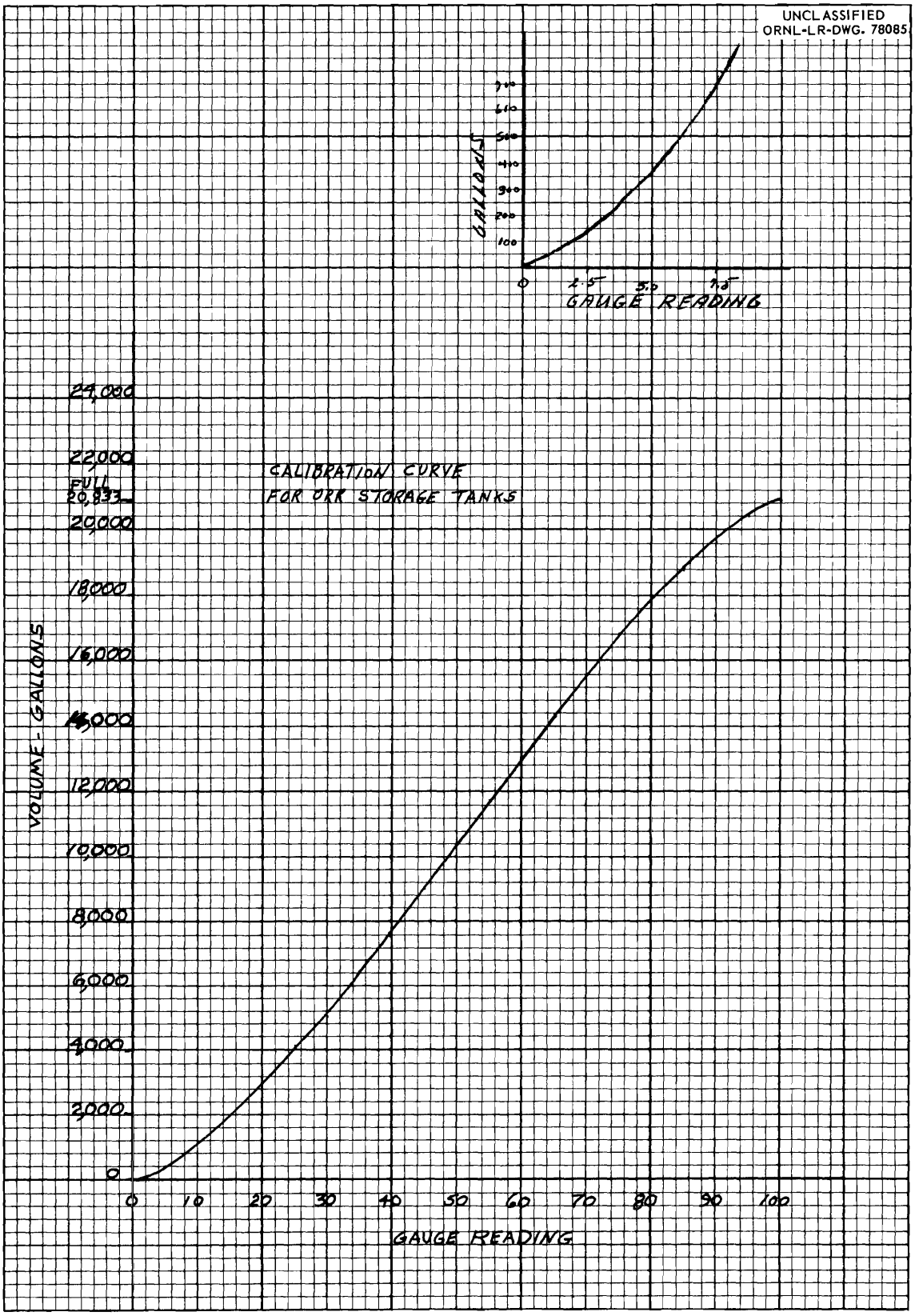

Fig. 5.5. Calibration Curve for ORR Storage Tanks

component. The tank access cover should be off. The vent valves on the component should be open, the drain valves closed, and the inlet and exit valves on the component should be open.

Air Coolers

1. Open the vent valves on the 8 coolers.
2. Close the drain valves.
3. Open the inlet and exit valves.
4. Partially opening one of the 8-in. pump-suction valves, 162a or 101a, will allow water from the reactor tank to fill the coolers.
5. Close the vent valves when water pours out in a steady stream.

Shell-and-Tube Heat Exchangers

1. Open the vent valves
2. Close drain valve 520a
3. Open the inlet and exit valves to the heat exchangers, 121a, 122a, 123a, 124a, 125a, 126a, 127a, 128a.
4. Partially opening one of the 8-in. pump-suction valves, 162a or 101a, will allow water from the reactor tank to fill the exchangers.
5. Close the vent valves when water pours out in a steady stream. If the lines and pumps have been drained, it is necessary to vent the vertical air cooler lines. This should be done in all cases if possible.

5.2d. Reactor Demineralizers

In a reactor cooling system, the radioactivity level, the rate of corrosion, and the rate of deposit formation must be closely controlled.

At the ORR these objectives are met by demineralizing the cooling water with multiple bed, ion-exchange resins. There are two demineralizer systems: one "on-stream" and the other kept on standby, regenerated and ready for service.

Most of the components in the reactor cooling loop are made of aluminum, although some of the smaller items are stainless steel. The portion of these materials which dissolves in the water, dissolved gases, and fission products which diffuse through the fuel cladding, constitute most of the impurities found in the primary loop. A slight amount of demineralized water is added to the system continuously during normal operation to supplement that lost through cooling and sealing various bearings and glands. It is essential that the primary water have as few impurities as possible since it passes through the high neutron flux core region where impurities become highly activated, so some cooling water is continually bypassed through the demineralizers to remove trace impurities.

Three checks are available for judging the purity of the water in the reactor system. The first is the radioactivity level measured in disintegrations per minute per milliliter. The second is pH, a measure of the acidic or basic quality of the water. The third is the electrical resistance or resistivity of the water. Measures of pH and resistance are made once each shift; water activity is measured once each day. Resistivities and activities are also recorded continuously in the control room. In general practice, the water resistivity and the water activity checks have been the best guides to the effectiveness of a unit and the need for regeneration.

The ORR demineralizers are located in the basement at the west end of the building. The two systems are separated from each other and enclosed behind 6-in. solid concrete block walls. In addition to the concrete shielding, the cation columns are shielded with approximately 4 in. of lead. Extension handles on all valves extend through the block walls so that remote operation is possible even though it is not normally required by the radiation level. Each demineralizer system consists of three resin columns: a cation column 30-in. in diameter with 72-in. straight sides containing 10 cubic feet of resin; an anion column 40-in. in diameter with 96-in. straight sides containing 37 cubic feet of resin; and the mixed-bed unit 36-in. in diameter with 96-in. straight sides containing 18 cubic feet of anion resin and 12 cubic feet of cation resin. All resins are standard commercial types; namely, Rohm and Hass Company Amberlite* IR-120 cation resin and Amberlite* IRA-401 anion resin.

The driving force causing the water to pass through the demineralizers comes from the facility cooling pumps. The system is so piped that either pump, north or south, can be used to feed either demineralizer by use of the special crossover valve 112Xa. However, it is preferred that this valve remain closed and the flow be directed from the north pump to north demineralizer or south pump to south demineralizer.

Since there are two reactor demineralizer systems, designated north and south because of their location with respect to the building center-line, some confusion might exist concerning the valve numbers of each system. To avoid this, valves in both systems are numbered similarly except that for the south system, the letter "X" is used immediately after the valve number; e.g., A525a and A525Xa, 114b and 114Xb, etc.

All procedures have been written for the north system. Extension of a procedure to the south system, based upon the above valve numbering scheme, should be straightforward.

5.2e. Regeneration Procedures

A detailed procedure is outlined on the method of regneration to be used on each column. It is imperative that the procedure be followed in detail, since serious damage could be inflicted upon the reactor if any regenerant solutions were to be injected into the cooling system.

All regenerant solutions are mixed in Building 3004 and piped to the demineralizer site in the basement of the ORR, Building 3042. In the NaOH cycle the solutions are mixed, agitated, and pumped, using the existing facilities in Building 3004. In the HNO_3 cycle, the present method used in LITR demineralizer regenerations is used; that of mixing acid and water in the line, and pumping, using the existing acid pump.

Cation Resin Column Regeneration

The cation resin column is regenerated following its inability to sufficiently remove the radioactive ions from the reactor cooling water system. Samples of this water are taken and counted daily to determine when this breakdown occurs.

A step-wise regeneration method is detailed in the following procedure:

1. Remove the demineralizer from service. This is accomplished by closing the following valves:

112A	113A	114B
112B	113B	444B
112C	B113A	445B
112E	B113B	A446B
112F	ACV4A2*	534A

*This valve is closed with the switch located above the integrator in the pipe tunnel. In the No. 1 position the south demineralizer valve is closed; in the No. 2 position the north demineralizer valve is closed.

2. Take integrator readings and record them in the ORR log book.
3. Remove the spool pieces to insure positive isolation of the demineralizer from the reactor water system. The spool pieces, located inside the demineralizer cell, are identified by a red stripe.
4. Take a sample of the resin before and after regenerating the column to check the efficiency of the regeneration; send the samples to the lab for analysis. Sampling the resin is accomplished by pressurizing the column with process water and forcing the resin out of the sampling line. To do this, make the following arrangement:

   Close valves: 113A, 112F, 512A, 513A

   Open valves: 407A and 527A

   This column is now pressurized. Open the valve on the sampling line coming from the top of the cation column. This valve is located inside the demineralizer cell. Run enough resin out to empty the line of stagnant resin, then take the sample. After

the sample has been taken, close all of the valves associated with this operation.

5. Backwashing and fluffing the cation resin.

The purpose of the backwash operation is to rid the resin bed of foreign matter and to fluff the resin bed prior to sending the regenerant solution through the column. Process water, used in this phase, enters the bottom of the column in an up-flow direction. The effluent from the top of the column must be sent to the hot drain.

Check with the tank farm operator and obtain permission to send the backwash water, regenerant solution, and the first portion of the rinse water to the hot drain tank WC-19. This is a total of approximately 900 gallons of liquid. Make sure that none of this liquid gets into the warm drain as it will do damage to and contaminate the basement sump and the sump pump.

Observe the backwash flow-rate very closely. The water is not visible; therefore, the operator will not be aware of the resin being lost if the backwash flow-rate is exceeded.

Backwashing of the cation column requires the following valve arrangement in the basement of Building 3042.

Close valves: 534A, 113A, 513A, 112F

Open valves: 535A, 527A, 407A

Open valve 512A until a flow of 10 gpm is indicated on the process water flow meter FE-12.

Continue the backwashing for 30 minutes to provide proper cleaning; after which, close all valves associated with this operation.

6. Sending the acid regenerant solution through the cation column: Two operators are required for this phase of the regeneration, one at the basement of Building 3042 and one at Building 3004. They will contact each other by phone.

The operator in the basement of Building 3042 will make the following valve arrangement:

Close valves: 534A, 406A, 407A, 527A, 512A, 113A, 444B

At this time, all 3-way valves on all the other demineralizer columns should be checked to make sure that they are closed and locked.

Open valves: 443A, 443B, 443C, 513A, 535A

The operator in the basement of Building 3042 will now inform the operator in Building 3004 that the column is prepared to receive the regenerant solution.

The operator in Building 3004 will proceed as follows:

Jet the acid into the overhead tank using the following procedure:

a. Open the 1 1/2-in. vent valve No. 5 and the 1 1/2-in. vent line coming from the acid storage tank. (It is very important that this valve be open. If it were closed and the jet were left on accidentally, the acid storage tank would collapse when all of the acid had been jetted out.)

b. Close the small 1/4-in. vent valve No. 7 on the vent line coming from the overhead acid tank.

c. Close valve No. 6. This valve is located on the acid line over the drain just outside of the north door of Building 3004. This valve should stay closed except when acid is jetted from carboys instead of the acid storage tank.

d. Open acid valve No. 10. This valve, on the acid line entering the overhead acid tank about 2 feet from the tank, can be left open at all times.

e. Open acid valve No. 8. This valve is on the outlet acid line from the acid storage tank and is located about midway up the line in front of the acid storage tank.

f. Open the air jet valve and permit the acid to be jetted from the acid storage tank into the overhead acid tank until the level of the acid in the overhead tank reaches the third marker on the sight glass. This sight glass is on the west end of the tank. The markers on the sight glass are adjusted as follows:

Lower marker = 1 carboy, 2nd marker = 2 carboys, 3rd marker = 3 carboys, and the upper marker = 4 carboys.

When acid reaches the 3rd marker, <u>immediately</u> close the air jet valve, close valve No. 8 on the acid storage tank, and open the small vent valve. The reason for stopping the acid on the 3rd marker is that in the time that it takes to close the air jet valve and the No. 8 valve on the acid storage tank, and to open the small vent valve No. 7, another carboy of acid is syphoned from the acid storage tank to the overhead acid tank bringing the acid level in the tank to the upper marker of the sight glass.

Never run the overhead acid tank over; the acid will overflow through the vacuum line, through the air jet, and out onto the ground on the outside of Building 3004.

Open the valve marked "acid regenerant solution to ORR".

Open valve No. 4, discharge of pump, located on top of the pump.

Open the valve that sends the cooling water to the pump bearings.

Start the pump.

Open valve No. 5, the process water valve, and adjust it to read 10 gpm on the flow meter.

Water will now be flowing to the cation column in the basement of Building 3042.

Before opening the acid valves, notify the operator in the basement of Building 3042 to check for leaks, etc. If there are no leaks, the operator in Building 3004 can start mixing the acid with the process water.

Open the valve marked "acid to No. 2 unit".

Open valve No. 6.

Open valve No. 6A and adjust until a specific gravity of 1.03 to 1.06 is obtained at the sampling valve.

When the acid is added to the process water, an increase of 1/2 to 3/4 gpm will be noticed on the flow meter.

After the entire tank of acid is sent through the cation column:

Close valve No. 6A.

Close valve No. 6.

Close valve marked "acid to No. 2 unit".

The process water should continue to flow for 5 minutes to thoroughly flush the lines.

After completing this, close all valves in Building 3004 and in the basement of Building 3042 that were used in this operation.

7. Rinsing the cation column:

Rinse the column with demineralizer water from Building 3004 until all excess acid is removed. This will require about 1250 gallons. The demineralizer water storage tank level in Building 3004 should be checked to make sure that this amount of water is available.

The first portion of the rinse water (about 300 gallons) should be sent to the hot drain because it contains enough acid and radioactivity to do damage to and contaminate the basement warm drain sump and sump pump.

To rinse the cation column, make the following valve arrangements in the basement of Building 3042:

Close valves: 534A, 113A, 527A, 512A

Open valves: 534A, 444B, 406A

Open valve 513A until a flow of 10 gpm is indicated on the demineralized water flow-meter FE-13.

Permit the water to flow in this manner for 30 minutes, after which it may be changed from the hot drain to the building warm drain as follows:

Open valve No. 534A

Close valve No. 535A

This will permit the remaining portion of the cation column rinse water to be sent to the warm drain.

The rinsing cycle will be considered complete when the pH of the rinse water levels out. At this time, all valves associated with this phase should be closed. Total time for rinsing, approximately 1 hour and 45 minutes.

8. Take an "after-regeneration" resin sample using the method outlined in step 4.
9. If the anion column and the mixed-bed column are serviceable, replace the spool pieces. The demineralizer is now ready for service.

Anion Resin Column Regeneration

The anion resin column is regenerated following its inability to sufficiently remove the radioactive ions from the reactor cooling water. Samples of this water are taken and counted daily to determine when this breakdown occurs. A step-wise regeneration method is detailed in the following procedure:

1. Remove the demineralizer from service. This is accomplished by closing the following valves:

112A	113A	114B
112B	113B	444B
112C	B113A	445B
112E	B113B	A446B
112F	ACV4A2	534A

2. Take integrator readings and record them in the ORR log book.
3. Remove the spool pieces to insure positive isoloation of the demineralizer from the reactor water system. The spool pieces, located inside the demineralizer cell, are identified by a red stripe.

4. Take a sample of the resin before and after regenerating the column. Send the samples to the lab for a check on the efficiency of the regeneration. Sampling the resin is accomplished by pressurizing the column with process water and forcing the resin out of the sampling line.

   To do this, make the following valve arrangement:

   Close valves: 113B, 526A, 522A, B113B, A510A, A446B

   Open valves: A407A, B113A

   The column is now pressurized.

   Open the valve on the sampling line protruding from the lower part of the column. This valve is located inside the anion column cell near the outer wall. Run enough resin out to empty the line of stagnant resin, then take the sample. After the sample has been taken, close all valves associated with this operation.

5. Backwashing and fluffing the anion resin.

   The purpose of the backwash operation is to rid the resin bed of foreign matter and to fluff the resin bed prior to sending the regenerant solution through the column. Process water, used in this phase, enters the bottom of the column in an upflow direction. The effluent exists from the top of the column and is sent to the hot drain.

   Check with the tank farm operator and obtain permission to send the backwash water, regenerant solution, and the first portion of the rinse water to the hot drain tank WC-19. This is a total of approximately 1300 gallons. Be sure than none of this liquid

gets into the warm drain as it will do damage to and contaminate the basement sump and sump pump. Observe the backwash flow rate very closely. The water is not visible; therefore, the operator will not be aware of the resin being lost if the backwash flow rate is exceeded.

Backwashing of the anion column requires the following valve arrangement in the basement of Building 3042.

Close valves: 534A, 113B, 526A, B113B, A510A, 446B

Open valves: 535A, A407A, B113B

Open valve 522A until a flow of 10 gpm is indicated on the process water flow-meter FE-12.

Continue the backwashing at this rate for 37 minutes to provide proper cleaning; after which, close all valves associated with the operation.

6. Sending the caustic regenerant solution through the anion column:

Two operators are required for this phase of the regeneration, one in the basement of Building 3042 and one at Building 3004. They will contact each other by phone.

The operator in the basement of Building 3042 will make the following valve arrangement:

Close valves: 534A, 113B, B113A, A441A, 522A, A446B

At this time, all 3-way valves on all other demineralizer columns should be checked to make sure that they are closed and locked.

Open valves: 535A, 441A, 441B, A441A, A510A

The operator in the basement of Building 3042 will now inform the operator in Building 3004 that the anion column is prepared

to receive the regenerant solution.

The operator in Building 3004 will mix a tank of caustic regenerant (a 5% solution of sodium hydroxide, NaOH) by one of the following methods:

a. Add 100-lb of flake caustic to the mix tank filled to the indicator with process water, mixing with the agitator to insure good mixing, and heat to 95°F with steam. The specific gravity should be 1.05 and adjustments must be made until the desired results are obtained.

b. After filling the measuring tank with liquid caustic from the large supply tank and the mix tank to the indicator with process water, the liquid caustic should be dumped into the mix tank. The solution should be mixed, using the agitator, and adjustments made to obtain a specific gravity of 1.05. The solution should be heated to 95°F.

Open valves: T, Y, "To ORR"

Start the pump and open valve "V" until a flow of 10 gpm is obtained. Continue at this flow until the level in the mix tank reaches 3 in. Stop the pump and close the valves. Drain the remainder of the solution to the sump. Fill the mix tank to 6 in. with fresh water, open the valves, and start the pump. This is to clean the lines of caustic solution.

After completing this phase of the regeneration, close all valves in Building 3004 and in the basement of Building 3042 that were associated with this phase.

7. Rinsing the anion column.

Rinse the column with demineralized water from Building 3004 until all of the excess caustic is removed. This will require about 2800 gallons. The demineralized water storage tank level in Building 3004 should be checked to make sure that this amount of water is available.

The first portion of the rinse water (about 450 gallons) should be sent to the hot drain because it contains enough caustic and radioactivity to do damage to and contaminate the basement warm drain sump and sump pump.

To rinse the anion column, make the following valve arrangements in the basement of Building 3042:

Close valves: 534A, 522A, 526A, 113A, B113A

Open valves: 535A, 113B, 405A, A446B

Open valve A510A until a flow of 10 gpm is indicated on the demineralized water flow-meter FE-13.

Permit the water to flow in this manner for 45 mintues. Then change it from the hot drain to the warm drain by making the following valve changes:

Open valve 534A

Close valve 535A

This will permit the remaining portion of the anion column rinse water to be sent to the warm drain.

Open valve A510A until a flow of 30 gpm is indicated on the demineralizer water flow-meter FE-13. Continue rinsing at this flow until the pH of the water becomes consistent. The complete rinse cycle should not take more than 2 hours.

When the rinse cycle is complete, close all valves associated with this operation.

8. Take an "after regeneration" resin sample using the method outlined in step 4.

9. If the cation column and the mixed-bed column are serviceable, the spool pieces may be replaced. The demineralizer is now ready for service.

Mixed-Bed Column Regeneration

The regeneration of the mixed-bed column consists of the following phases:

1. Separation of the resins:

   The design of this column necessitates that two types of resins be used in a mixed state. To regenerate the resins, which must be done separately, they must first be separated. The anion resin, being the less dense of the two, will be deposited on the top during a backwash operation at a special flow rate. This particular phase is very important since the success of the regeneration is greatly dependent upon the efficiency of the separation.

   The backwash rate to be used for this separation will be 10 gpm for approximately 30 minutes or until a definite interface is visible. To backwash, the following valve arrangement is made:

   Close the following valves:

   B113A, from anion exchange

   524A, drain

   523A, drain

A510A, drain

512A, drain

513A, drain

A405, demineralizer water

B113B, main line from anion

Sampling valves

408A, acid

408B, acid 3-way valve locked

408C, acid

442A, air

441A, caustic

441B, caustic 3-way valve locked

441C, caustic

114B, mainline from mixed bed

ACV4A2, automatic valve (closed with switch above integrators in pipe tunnel)

534A, warm drain

Open the following valves in the order listed:

B526A, bypass around mixed bed

445A, off-gas

445B, off-gas

445C, off-gas

A525A, drain

535A, hot drain

*A407A

*This valve, A407A, is used as the flow regulator and the flow is indicated by flow element FE-12. The flow required for a good separation is 10 gpm for approximately 30 minutes.

After the resin has been separated, all valves associated with this operation should be closed.

2. Regeneration of the anion resin.

After the resins have been separated as indicated in step 1, the anion resin, which is now on top, should be regenerated first. The facilities for mixing and pumping the regenerant solution are located in Building 3004 and are the same as those used in other anion regenerations for Building 3004, LITR, and other ORR anion columns.

After mixing, the solution is pumped from the mix tank to the demineralizer site at a flow rate of 9 gpm using the NaOH pump which is located in Building 3004.

The recommended valve arrangement necessary for proper regeneration is indicated.

In the basement of Building 3042, close the following valves:

B113B, isolate from anion

A525A, drain

524A, drain

522A, drain

512A, drain

513A, drain

A510A, drain

Sampling valves

442A, air supply

114B, isolate from line

408A, acid

408B, acid 3-way valve

408C, acid

534A, warm drain

ACV4A2, automatic drain

445A, off-gas

445B, off-gas

445C, off-gas

441B, 3-way valve, caustic

441A, caustic

523A, drain

535A, hot drain

441C, caustic line

Make the following changes at Building 3004 to initiate flow:

Open valve No. 10; open valve No. 2.

Make valving arrangements for using the NaOH pump; open valve T; open the valve on the discharge side of the pump; and CLOSE valves U, X, and V.

Start the pump. This gives pressure to the demineralizer site. At the ORR demineralizer site, valve No. 523A should be adjusted to obtain the desired flow of 9 gpm. After the caustic is through, refill the mix-tank half full with plain water and send it through the line to rinse it (caustic line to ORR).

Upon completion, all valves associated with this phase of the regeneration should be closed.

3. Rinse of Anion Resin

After the regenerant has been passed through the resin bed, the resin should be rinsed with demineralized water until the excess regenerant has been washed out. This will be indicated by a leveling-out of the pH. The rinse rate should be 9 gpm for 20 minutes and then 27 gpm until the pH levels out. This should take approximately 1 hour and 45 minutes. The total amount of rinse water required should be approximately 2000 gallons.

All facilities needed for this phase of regeneration are located in the basement of Building 3042. To prepare the system for rinse:

Close the following valves:

B113A, isolates anion unit

B526A, bypass

A525A, drain

441A, caustic

441B, caustic 3-way valve closed and locked

441C, caustic

524A, drain

522A, drain

512A, drain

513A, drain

A510A, drain

A407A, process water

408A, acid

408B, acid 3-way valve closed and locked

408C, acid

442A, air

Sampling valves

114B, isolates unit

ACV4A2, automatic valve drain

Open the following valves in the order listed:

445A, off-gas

445B, off-gas

445C, off-gas

B113B, inlet line

535A, hot drain for 20 minutes at 9 gpm, then close. Open 534A for the 27-gpm rinse (warm drain) remainder of 2000 gallons.

A405A, demineralized water

*523A, drain

*This valve, 523A, is adjusted to obtain the desired flow as indicated by flow element FE-13.

A flow of 9 gpm for 20 minutes and then 27 gpm should be used until the pH levels out. One hour and 45 minutes should complete the rinse cycle. Following this, all valves involved with this phase should be closed.

4. Regeneration of the cation resin of the mixed-bed.

Following the anion rinse, the cation resin is ready for regeneration. The facilities used in mixing the regenerant are the same as those used in other cation regenerations and are located in Building 3004. They include the overhead measuring tank, plant process water, piping and valves, and the special acid pump.

The regenerant solution is a 5-10% solution of nitric (HNO_3) acid. The concentrated acid is diluted with process water in the line just prior to entering the pump, the pump being used to supply the necessary pressure at the demineralizer site. The regenerant enters the column at the bottom, passes through in an upflow direction, and the effluent is taken off at the interface and sent to the hot drain. While the regenerant is being passed through the column, the anion resin is flooded with demineralized water in a downflow direction to prevent the acid from moving above the interface. This, too, is taken off at the interface and sent to the drain.

The following steps should be used to obtain an efficient regeneration. Establish the rinse downflow through the column by the following arrangement:

Close valves:

B113A, isolate from anion column

A497A, process water

B526A, bypass

522A, drain

512A, drain

513A, drain

A510A, drain

A525A, drain

A534, warm drain

441A, caustic

441B, caustic 3-way valve locked

441C, caustic

408A, acid

408B, acid 3-way valve locked

408C, acid

114B, isolate from main line

442A, air

ACV4A2, automatic

445A, off-gas

445B, off-gas

445C, off-gas

Open the following valves in the order listed:

B113B, main line

535A, hot drain

*A405A, demineralized water

*To adjust the flow, valve A405A is used. A flow of 5 gpm should be sufficient to keep the acid from diffusing up into the anion resin.

After the demineralized water flow in the anion bed is established at 5 gpm, open the following valves in this order:

408B, 3-way valve handle up

408A, acid

408C, acid

The operator in the basement of Building 3042 will now inform the operator in Building 3004 that the column is prepared to receive the regenerant solution.

The operator in Building 3004 will jet nitric acid into the overhead tank using the regular procedures, and prepare to send the acid solution to the ORR as follows:

Open the valve marked "acid regenerant solution to ORR".

Open valve No. 4, discharge of pump, located on top of pump.

Open the valve that sends the cooling water to the pump bearings.

Start the pump.

Open valve No. 5, the process water valve, and adjust it to read 10 gpm on the flow meter.

Water will now be flowing to the cation column in the basement of Building 3042.

Before opening the acid valves, notify the operator in the basement of Building 3042 to check for leaks, etc. If there are no leaks, the operator in Building 3004 can start mixing the acid with the process water as follows:

Open valve marked "acid to No. 2 unit".

Open valve No. 6.

Open valve No. 6A and adjust it until a specific gravity of 1.03 to 1.06 is obtained at the sampling valve.

When the acid is added to the process water, an increase of 1/2 to 3/4 gpm will be noticed on the flow meter.

After the entire tank of acid is sent through the cation column:

Close valve No. 6A.

Close valve No. 6.

Close the valve marked "acid to No. 2 unit".

The process water should continue to flow for 5 minutes to thoroughly flush the lines.

Upon the completion of this operation close all valves, both in Building 3004 and in the basement of Building 3042, that were used in this operation.

5. Rinsing the cation resin of the mixed-bed.

After the regenerant solution has passed through the cation bed, the resin should be rinsed with demineralized water for approximately 3 hours or until the pH levels out. The flow will be in an upflow direction, with the water entering the bottom and being removed at the interface.

All facilities necessary for this phase of the regeneration are located at the demineralizer site. Demineralized water is used for the rinse and the effluent is sent first to the hot drain for 90 minutes, then to the warm drain for approximately 90 minutes or until the pH levels out. To arrange the system for the rinse phase:

Close the following valves:

A407A, process water

B113A, from anion

B113B, to mixed-bed

522A, drain

524A, drain

512A, drain

513A, drain

A510A, drain

A525A, drain

408A, acid

408B, acid 3-way valve locked

408C, acid

411A, caustic

411B, caustic 3-way valve locked

411C, caustic

442A, air

Sampling valves

114B, isolate system

534A, drain

ACV4A2, automatic valve

Open the following valves in the order listed:

445A, off-gas

445B, off-gas

445C, off-gas

B526A, bypass

535A, hot drain

523A, drain

*A405A, demineralized water

*Valve A405A is used to regulate the flow as indicated by flow element FE-13. The desired flow is 10 gpm and should be maintained until the pH levels out. Following this, all valves associated with this phase of the regeneration should be closed.

6. Mixing resins.

After the resins have been regenerated and rinsed they must be mixed. Mixing is accomplished by bubbling air through the column in an upflow direction while the resins are covered with water. Agitation in this manner causes a thorough mixing of the two resins.

To prepare for this mixing, some of the water in the column is drained. Since no sight glass is available to show the water level, the following procedure is used.

Open valves 524A and 535A to the hot drain. Open the valve at the top of the column to admit air. Allow these valves to remain open for 5 minutes, then close them.

To mix the resins, open the valve at the top of the column and valve 442A, the air supply valve. Observe the mixing through the porthole in the side of the column and be sure that no water or resin is being blown from the column to the atmosphere. Continue mixing for 30 minutes; then close all valves associated with this operation.

The unit must then be rinsed. To accomplish this, open valves:

A405A, B113B, 524A, 535A

Regulate the flow to 10 gpm. Observe the resistance probe and rinse until the resistance levels out. The reading should be approximately 1,250,000 ohms. Upon completion, close all valves associated with this phase of the operation. The mixed-bed is now ready for service.

Placing a Unit in Service

When a unit has been regenerated and is placed in readiness, most of the water contained in it is high purity water from Building 3004. This water may remain stagnant in the demineralizer system for as long as several weeks, during which time the water purity decreases. When putting such a unit on the line, it should first be rinsed with demineralized water. No serious difficulties arise from the omission of this rinsing other than causing low reactor water resistivity alarms to sound. Rinsing of the system is accomplished by opening valves:

406A, 113A, B113B, 524A, 113B, B113A, 535A.

All other valves in the system are closed. The rinse flow is set at 10 gpm (read on FE-13), and the units are rinsed for ~20 minutes. All valves associated with this phase of the procedure are then closed.

To place the unit on the line, the following valves are opened (all other valves being closed).

112A	B113A	445A
112B	B113B	445B
112C	*ACV4A2	445C
112E	114B	A446A
112F	444A	A446B
113A	444B	A446C
113B	444C	534A

*To open this valve, turn the switch located above the integrator to No. 1 position for the North Demineralizer and No. 2 position for the South Demineralizer.

The system flow is set at approximately 75 gpm as shown on the flow gauge mounted just above the integrators in the pipe tunnel. Valve 114B

may be used to throttle the flow.

5.2f. Bypass Degasifier

Reference

D-30382

Introduction

The ORR bypass degasifier is a unit designed to remove entrapped gases and vapors from the water used in the reactor or pool primary cooling systems. The use of this unit aids in reducing the air activity in the reactor building. The degasifier unit is located in the basement, east of the north reactor anion column enclosure. It is housed in a cubicle with 8-in. concrete block shielding.

Operation

A stream of reactor, pool, or the exit water from the hydraulic tube facility is bled from lines 301, 203, or 230, respectively. Line 301 supplies the facility cooling pumps; line 203 is the pool cooling supply line; and line 230 is the hydraulic tube exit line. This stream of water passes through an automatic control valve (ACV) into the top of the degasifier. The stream is sprayed into the tank and recollects as a condensate at the bottom. This condensate then supplies a centrifugal pump which returns the water to the reactor system via line 114, the exit line from the reactor demineralizers; the pool cooling system via line 201, the suction of the pool cooling pumps; or the demineralizers via the inlet line to the demineralizers. The function of the ACV mentioned above is to maintain the condensate in the tank at a level which will prevent cavitation.

In order to remove any gases liberated by spraying the water into the

degasifier tank, the tank is evacuated continuously by a steam jet to produce a negative pressure equal to 26 in. of mercury. Located between the jet and the degasifier tank is a condenser used to condense any water vapor which the jet might remove from the tank while removing the previously entrapped gases. This condensed vapor is returned to the degasifier tank via the same line supplying the condenser since the pipe line is large enough in diameter to allow simultaneous flow in both directions.

The exhaust from the steam jet vacuum pump, which now contains the gases removed from the water, is fed through another condenser to condense the steam vapor. The steam condensate and the free gases enter a fluid-gas separator via separate lines. The final separation of liquid and gas is made here with the gas being removed by a line connected to the building off-gas system. The fluid, since it might contain traces of radioactive water which failed to condense in the first condenser, is piped to an existing "hot" drain in the north reactor demineralizer cell. The condensers mentioned above are cooled by means of plant process water.

Placing the Degasifier in Service

The following operations, necessary to place the degasifier in service, are given with the assumption that the degasifier is empty and all its associated manual valving is completely closed. If the equipment is in a condition other than that stated above, some degree of caution should be exercised when making changes. At such a time, the reactor supervisor or the shift engineer whould be consulted before starting the degasifier.

To place the unit in service, the following preliminary steps should be completed first:

1. Check that the bypass valve around the ACV is closed (valve No. 1).

2. Check that the valves immediately above and below the ACV are fully closed (valves No. 2 and No. 3).
3. Check that the valve between the check valve and the rotometer on the exit side of the centrifugal pump is fully closed (valve No.4).
4. Check that there is an air supply to the controller. The gauge on the north reactor anion column cell wall should indicate approximately 20 psig.

Reactor System

5. Determine without doubt that the degasifier supply and return valves from the pool cooling system are closed. These valves are No. 9, inside the north facility pump cell, and No. 10, near line 201 in the east end of the pipe tunnel.
6. Determine that both the degasifier supply from the hydraulic tubes and the return to the demineralizers are closed. These valves are HTC-DR, overhead in the east end of the pipe tunnel and No. 11, on the north wall of the north facility pump cell.
7. Open the valve on line 301 completely (valve No. 5). This valve is located inside the north facility pump cell. If the south facility pump is in service, it is necessary to open valve 301a to obtain flow to the degasifier.
8. Open the valve on line 114 completely (valve No. 6). This valve is located near the pipe chase wall on the south side of the pipe tunnel, north of the center-line of line 114.
9. Open valve No. 2, above the ACV.
10. Open the valve below the ACV slowly (valve No. 3). This will allow the water to enter the degasifier tank. As the tank fills,

the level will rise in the sight glass on the west side of the tank. When the level in the sight glass is at or near the top of the glass, the ACV should close. If it does not close, close all valves and report the malfunction to the reactor supervisor or the shift engineer. If the ACV closes, open the valve below the ACV completely (valve No. 3).

11. Open the valve between the check valve and the rotometer on the exit side of the pump one complete turn (valve No. 4).
12. Start and stop the pump a few times to insure the absence of air in the pump. Turn on the pump. The control switch for the pump is located on the wall behind the degasifier unit.
13. Adjust the valve mentioned in (11) above until a flow of 40 gpm is established.
14. Turn on the process water (valve No. 7) and adjust the flow to 20 gpm. The valve and rotometer for this purpose are located outside the degasifier cubicle on the cubicle wall.
15. Turn on the steam to the steam jet (valve No. 8) about one quarter of a turn, using the long steel "tee" handle hanging near the ACV. After a vacuum of 26 in. of mercury is indicated on the tank pressure gauge, slowly reduce the steam flow to that point where a further reduction in steam flow would result in a loss of vacuum.

The degasifier is now in service. Before leaving the area, however, be sure that the pump flow rate is still 40 gpm.

Pool System

5. Determine without doubt that the degasifier valves from the reactor bypass system are closed. These valves are No. 5, inside the north facility pump cell and No. 6, near line 114.

6. Determine that the degasifier supply from the hydraulic tubes and return to the demineralizers are closed. These valves are HTC-DR, overhead in the east end of the pipe tunnel, and No. 11, on the north wall of the north facility pump cell.
7. Completely open valve No. 9, located inside the north facility pump cell.
8. Completely open valve No. 10, near line 201 in the pipe tunnel.
9. Proceed with step 9 under "reactor system", above.

Hydraulic Tube - Demineralizer System

5. Determine without doubt that the degasifier supply and return valves from the pool cooling system are closed. These valves are No. 9, inside the north facility pump cell, and No. 10, near line 201 in the east end of the pipe tunnel.
6. Close valve No. 6 located near line No. 114 at the east end of the pipe tunnel.
7. Completely open HTC-DR, overhead in the east end of the pipe tunnel.
8. Completely open No. 11, on the north wall of the north facility pump cell.
9. Open the valve on line 301 (valve No. 5). This valve is located inside the north facility pump cell. If the south facility pump is in service, it is also necessary to open valve No. 301a to obtain flow to the degasifier.
10. Proceed with step 9 under "reactor system", above.

As can be seen from the procedures, the following flow through the degasifier may exit:

from	to
1. reactor system	1. reactor system
2. pool system	2. pool system
3. hydraulic tubes	3. demineralizers
a. from pool	
b. from reactor	

Care must be exercised while valving. For example, one would not want to place the unit in service from the pool system to the reactor system, as this would flow reactor water from the reactor system to the pool system through the equalizer legs. Here are the acceptable valving arrangements: 1-1, 1-3, 2-2, 3a-2, 3b-1, and 3b-3. When switching the degasifier to systems involving the pool, valving should be done as quickly as possible to avoid transfer of excess water between systems.

Removing the Degasifier from Service

The degasifier is taken out of service by a step-by-step reversal of the above procedures.

5.2g. Large Facility Water System

References: D-24644 and C-24645

Introduction

Reactor system cooling water, supplied via the facility cooling pumps, is used to cool the north and south facilities. The pebble bed of the large plug, the annulus of the plug, and the volume of the dished head and oval facility in the reactor vessel are normally filled with this water which circulates and removes the heat.

In view of the fact that there are similar units on opposite sides of the reactor vessel, extreme caution must be exercised when obstructing

the normal flow. Design engineers have placed a maximum differential pressure on the facilities of 15 psi; this should never be exceeded. The piping to the facilities has been rearranged to simplify draining and minimize the chance of error.

It is also be to recognized that serious radiation incidents can occur as a result of errors during draining since the reactor pool water is usually at grating level when the facilities are drained. It is possible to lower the water level in the reactor tank during an erroneous draining procedure, resulting in an extremely high background in the reactor pool.

Procedures for filling and draining, below, should be followed in the order given.

A check list for this procedure, Example 5.1, is to be completed for each draining and filling operation. The completed list, properly signed, is to be submitted to the reactor supervisor by the shift engineer.

Draining the Facilities

1. The following steps must be completed when draining the north or south facility, or both facilities.
   a. Lock out and tag the main reactor cooling pumps. These pumps must not run during the draining operation or while only one facility is drained because of high differential pressure.
   b. If the reactor pool water is at grating level, station a Health Physics surveyor or an appropriate alarming monitron over the reactor tank.
   c. If the reactor pool is full (overflow lip)
      (1) Remove the reactor demineralizer from service.
      (2) Station an operator at poolside to observe the water level. A warning should be given if the level is

ORR LARGE FACILITIES

Check List for Draining and Filling--Use with ORR Memo No. 59

Date _____, Time _____, Supervisor _____

Facility to be drained -- N☐ , S☐ , Both ☐

Reactor pool at grating ☐ or full ☐

H. P. or monitron above tank or man at poolside

Draining N Facility	Draining S Facility
1. Valve No. S-1 closed ☐	Valve No. N-1 closed ☐
2. Valve No. N-1 closed ☐	Valve No. S-1 closed ☐
3. Grinnel valve No. 303 closed ☐	Grinnel valve No. 303 closed ☐
4. North vent valve open ☐	South vent valve open ☐
5. Drain valve N-2 open ☐	Drain valve S-2 open ☐
6. Drain valve N-3 open ☐	Drain valve S-3 open ☐
Operator _____	Operator _____
Supervisor _____	Supervisor _____

Filling the Facilities

1. Valves N-2 and N-3 closed--be sure ☐
2. Valves S-2 and S-3 closed--be sure ☐
3. Grinnel valve No. 303 open ☐
4. Valve No. N-1 open ☐
5. Valve No. S-1 open ☐
6. Valve No. N-1 open ☐
7. Flow at S facility GPM _____ Operator _____
8. Flow at N facility GPM _____ Supervisor _____

Example 5.1.

lowered during this operation.

d. Complete the check list for this section.

2. For draining the south facility. (Proceed in the order given below.)

a. Complete parts 1-a, b, and c above.

b. Close the inlet valve to the north facility, valve No. N-1. This will prevent a syphon action between the facilities which drains the reactor tank.

c. Close the inlet valve to the south facility, valve No. S-1.

d. Close valve No. 303, a Grinnel valve, located in the basement area at the extreme east end of the demineralizer gallery. It has a remote control handle at this point. The actual location of the valve is in the pipe chase. Failure to close this valve will allow the reactor tank to drain.

e. A vent valve for each facility is located on the third level on the inside wall of the reactor pool approximately two feet below the normal water level. A plastic tubing with a "Hoke" valve has been attached to this vent valve to make it accessible for use. Open the small "Hoke" valve on the south side.

f. The drain valve for the south facility is located on the first floor and is No. 8-2. Open this valve to the warm drain. Open valve No. 8-3 located on the ceiling of the basement.

g. Complete the check list for this section.

3. For draining the north facility. (Proceed in the order given below).

a. Complete parts 1-a, b, and c above.

b. Close the inlet valve to the south facility, valve No. S-1. This will prevent a syphon action between the facilities which will drain the reactor tank.

c. Close the inlet valve to the north facility, valve No. N-1.

d. Close valve No. 303, a Grinnel valve, located in the basement at the extreme east end of the demineralizer gallery. It has a remote control handle at this point. The actual location of the valve is the pipe chase. Failure to close this valve will allow the reactor tank to drain.

e. A vent valve for each facility is located on the third level on the inside wall of the reactor pool approximately two feet below the normal water level. A plastic tubing with a "Hoke" valve has been attached to this vent valve to make it accessible for use. Open the small "Hoke" valve on the north side.

f. The drain valves for the north facility are located in the basement directly under the facility but at the basement ceiling elevation. These two valves, No. N-2 and No. N-3, should be opened to the warm drain.

4. To drain both facilities.

a. Complete sections 1, 2, and 3 above.

b. Complete all applicable sections of the check list.

Filling the Facilities

1. Close drain valves on the north facility--No. N-2 and N-3.

2. Close drain valves on the south facility--No. S-2 and S-3.

3. Open valve No. 303, located in basement, which is the only exit valve on the facilities.

4. Open the inlet valves to the facilities--on the north side, first level, valve No. N-1; on the south side, first level, valve No. S-1.
5. Start the facility cooling pump if it is not already running.
6. By checking the vent valves at the third level, it can be determined when the facilities are filled. As soon as the air has bled off, close the "Hoke" vent valves.
7. Flow through each unit can be observed via a square-root gauge located on the wall at each facility.
8. Complete the check list for this section.

5.2h. The Bypass Filters

It is desirable to continually pass a portion of the reactor system water through a filter. Two 100 gpm filters, located north of the ORR pump house, have been provided for this purpose.

1. Open valves No. 115b and No. 115c.
2. Open valves No. 155a and No. 115b and/or the corresponding valves around the other filter.
3. Close valves No. 109a and No. 503a.
4. Open valve No. 116a. This 3-in. globe valve regulates the flow through the filters.
5. The state of valve No. 115b will be determined by the amount of bypass flow desired.

5.2i. Gas Removal System

The ORR gas removal system consists of several ball-float traps which are located above, and connected to, parts of the water system where gases would naturally collect. These ball-float traps, normally full of water,

contain valves which open when gas is collected. The exit lines are connected to the building off-gas system.

Figure 5.3, Gas Removal System of ORR, shows the ball float trap and associated piping for gas removal from the reactor tank and the north exit water line. A similar installation exists for the south exit line.

The ball float trap is located in a recess in the pool parapet. The gas removal tank is located in the reactor pool below the grating level and near the north wall of the pool. Any entrapped gases would move, as shown by the arrows, from the reactor tank or the exit line to the gas removal tank and up to the ball float trap. Final movement would be to the off-gas system.

The reactor pool equalizer leg, also shown in Figure 5.3, is not directly related to gas removal, but rather, allows for expansion or contraction of water in the otherwise totally enclosed reactor cooling loop. The equalizer leg also can be used to provide emergency cooling flow.

Additional ball-float trap installations throughout the reactor water system are:

1. Above the bellows type expansion joint in line 101, reactor water exit. This unit is located in the expansion pit (sump No. 5) near the bottom of the steps to the pump house area.
2. Above the 10,000-gallon decay tank located south of the pump house.
3. One above each section of the reactor demineralizers (total of 6) and one above each section of the pool demineralizers (total of 2).

5.2j. The Air Cooler Bypass Loop

Before the installation of the cooling tower, the air coolers were the only means of cooling the reactor primary system. Since they are

still installed and are in standby, a word should be said about the air cooler bypass loop which is not normally used at this time.

The bypass loop was provided to move the water through the air coolers. The loop is located on the north side of the ORR pump house. In order to use this loop:

1. Open valves 115b and 115c.
2. Valves 109a and 503a must be closed.
3. Valve 115a, a 12-in. globe valve, may now be opened. This valve is used to regulate the flow through the bypass loop and hence, through the air coolers.

5.3. Reactor Secondary Cooling System

References

D-44118, D-37843, D-37865, D-37866, D-37961, D-37963, D-38723, D-39834, D-43643, D-39833

5.3a. Introduction

The reactor secondary system uses process water as the heat transfer medium. The secondary cooling water flows from the cooling tower basin, which normally contains approximately 70,000 gallons of cool water, to the secondary circulating pumps. The discharge from the pumps runs to a common 18-in. line in the secondary pump house and travels west to the outside and underground. From this point, the line turns southwest to the heat exchanger pit, rises out of the ground and into the north top opening of the east end of the four shell-and-tube heat exchangers. The water makes two passes on the tube side and out the south top opening of the east end of the exchangers, Figure 5.4, Section 5.2. The pipe parallels the inlet line to the heat exchangers and proceeds toward the secondary pump house. Just outside the pump house, the line turns north, parallel to the cooling tower.

Part of the water can bypass the tower and proceed to the pump suction, depending on the cooling demand; the remainder flows through the two risers to the top of the tower. As the hot water falls through the cooling tower the cooling tower fans draw air past it, evaporating some of the water and cooling the remainder. The cool water is then retained in the cooling tower basin which serves as a reservoir for the system. The basin water level is kept constant by a ball float level control valve which adds process water to make up evaporation and other losses.

5.3b. Draining the Reactor Secondary System

The reactor secondary system is normally drained for cleaning and/or inspection during each end-of-cycle shutdown. Naturally, it would be necessary to drain the system for maintenance if it were needed.

Draining the Cooling Loop

1. The reactor must be shut down and the secondary circulation stopped.
2. Close block valve 450A on the process-water make-up line.
3. Slowly open the drain valve, located underground at the southwest corner of the tower.
4. Check the floor drains in the secondary system pump house while draining the tower. If the drain valve is opened too much, water backs up in the floor drains in the pump house.
5. When the tower basin is drained, close the drain valve.

Draining the Heat Exchangers

Drainage is accomplished by removing two pipe plugs in each heat exchanger after closing off the inlet and exit valves on each heat exchanger if the remainder of the loop is not to be drained. If the entire system is to be drained, it is not necessary to close these valves.

5.3c. Filling the Reactor Secondary System

Before the loop can be placed in operation, the tower basin must be filled to operating level with process water. This is accomplished as follows:

1. Inform the steam-plant operator that the tower basin will be filled, requiring approximately 70,000 gal of process water.

2. Check for LITR experiments using process water for cooling. If such experiments are in operation, a large reduction in process-water header pressure, caused by filling the basin too fast, might shut the LITR down.
3. Slowly open block valve 450A, which is located underground at the southwest corner of the tower. This allows process water to flow through the automatic float-valve, 450B, into the tower basin. Valve 450A should remain open after the basin is filled.
4. If the process-water header pressure can be further reduced without affecting other areas (see step 2), valve 451A, located in the process-water line above ground near valve 450A, can be slowly opened. The basin level must be observed closely while valve 451A is opened and the valve must be closed when the water level nears the operating point.

5.3d. Placing the System in Operation

After the water in the tower basin has reached the operating level (determined and automatically controlled by the float valve on the process-water make-up line), the entire secondary loop should be readied for automatic operation. The following items should be checked for the proper status:

1. Tower fans
   a. Circuit breakers in "on" position.
   b. "Forward" mode of operation selected.
   c. Toggle switches in "auto" position.

2. Heat exchangers

   a. Secondary inlet valves 801A, 802A, 803A, and 804A open.

   b. Secondary exit valves 811A, 812A, 813A, and 814A open.

3. Tower

   Block valves 815A and 816A, at the top of the tower on the water risers, open.

4. Control system

   Setpoints established and system in "auto".

5. Circulating pumps

   a. Inlet block valves 817B, 818B, and 819B open.

   b. Exit block valves 817C, 818C, and 819C open.

   c. Cooling water turned on to each pump gland.

   d. Air bled off the top of each impeller housing.

   e. Air bled off the bypass line at the west end.

   f. Circuit breakers in "on" position.

The secondary loop can now be placed in operation, when required, by turning the circulating pumps "on" from the pump house. The "pump on" light in the center of the switch in the control room should come on. When the pumps are started, the following items should be checked immediately:

1. Recheck the cooling water to the pump glands. Check the glands for excessive temperature.

2. Equalize the flow in the north and south risers by adjusting valves 815A and 816A at the top of the tower. Observe the flow rate in each riser on the flow meters in the pump house. A visual check of the flow can be made at the top of the tower in the event the flow meters are inoperative.

3. Check the fans and the tower structure for excessive vibration.
4. Observe that the fan mode lights in the control room indicate the actual "high", "low", or "off" status.

5.3e. Tower Operation

The two cooling-tower fans, located at the top of the tower on the east side, pull air through the west side of the tower, across the falling streams of water, and exhaust it out the top of the tower with a high velocity. The large volume of air partly evaporates and cools the warm water falling through the tower. Due to the location of the heavy fans high on the tower in a warm, humid air stream, the fan components are the units most likely to give trouble. Since continuous, dependable fan operation is essential, these units should always be checked carefully.

The fans can be operated in the forward direction (i.e., where air is pulled in from the west side of the tower and blown out the top) at high and low speeds in either "manual" or "automatic" mode. A small toggle switch for each fan is located between the breakers and labeled "auto", "off", and "manual" in its three positions.

Operating the Fans in the Forward Direction in "Manual"

1. Place the toggle switch of the desired fan in the "manual" position.
2. The "stop" light, located on the reversing box adjacent to the breaker, should come on after about 2 minutes. If this light does not come on, check the main breaker.
3. Press the "forward" button on the reversing box.
4. The "low" and "high" speed buttons are now operative, and the desired speed can be selected.

Operating the Fans in the Forward Direction in "Automatic"

1. Place the toggle switch of the desired fan in the "auto" position.
2. The "stop" light, located on the reversing box adjacent to the breaker, should be on. If this light is not on, check the main breakers.
3. Press the "forward" button on the reversing box.
4. The fan will now operate automatically at either low or high speed as required by the control system.

Operating the Fans in the "Reverse" Direction

The fans are sometimes operated in the "reverse" direction in order to de-ice the cooling tower. In this mode, air is pulled in at the top of the tower, warmed by contact with the water, and then blown out the west side of the tower, melting any ice which may have formed on the louvers. Since the tower efficiency is much lower than normal, the continual presence of an operator is required when the fans are operated in this mode.

Reverse only one fan at a time, leaving the other to handle normal cooling requirements. Reversing both fans simultaneously has been known to shut the reactor down due to loss of cooling.

1. Place the toggle switch of the fan to be reversed in "manual". This will eliminate interference from the automatic controls.
2. Push the "stop" button on the reversing box. After a two-minute delay, the "stop" light will come back on.
3. Push the "reverse" button on the reversing box.
4. Push the "low" speed button. The fan will start operation in reverse.

5. Check the tower for excessive vibration.

6. Observe the melting of the ice formation. When the ice has melted, return the fan to normal operation by:

   a. Pushing the "stop" button on the reversing box.

   b. Returning the toggle switch to the "auto" mode of operation.

   c. Pushing the "forward" button when the "stop" light comes back on (after about a two-minute delay).

Cooling Tower Preventive Maintenance

The cooling tower and secondary circulation system were designed to operate continuously, 24 hours per day. However, dependable operation demands that there be a systematic schedule of inspection, lubrication, maintenance, and ultimate replacement of all the components. To facilitate this systematic check, an inspection form, provided by the tower manufacturer, is completed every two months during the regular end-of-cycle shutdown. This inspection form is Example 5.2.

Routine Checks

The following checks should be made at the indicated frequency:

1. Check once each shift when the tower is in operation:

   a. Unusual noise or vibration of the mechanical equipment.

   b. Indication of the motor overheating or bearing trouble.

   c. Proper water level in the tower basin.

   d. Proper water distribution and break-up in the tower-fill area.

   e. Operation of the circulating pumps.

   f. Suction screens, for clogging.

   g. Indication of oil leakage on the motors, pumps, and gear reducers.

TX-2934 (6-61)

Route to: _____

ORIGINAL

TOWER RECORD

MONTHLY INSPECTION

Owner _____ Date Inspected _____

Plant _____ Inspected By _____

Location _____

Owner Designation _____

Tower Manufacturer _____

Installed _____ 19____, Model No. _____

Tower Serves _____

CONDITION OF INDIVIDUAL FAN CELLS
Item Number(s) Apply to

Cell No. 1 _____ Cell No. 6 _____
Cell No. 2 _____ Cell No. 7 _____
Cell No. 3 _____ Cell No. 8 _____
Cell No. 4 _____ Cell No. 9 _____
Cell No. 5 _____ Cell No. 10 _____

Design Conditions _____ GPM _____ HW _____ CW _____ WB

Water Treatment Used _____

Condition: 1-Good; 2-Repair; 3-Replace	1	2	3
1. Endwall Casing			
2. Louvers			
3. Stairway			
4. Hand Rails			
5. Walkways and Ladders			
6. Distribution System			
Wood Pipe			
Cast Iron Pipe			
Steel Pipe			
Wood Flumes			
Flow Valve			
7. Distribution Basin			
Needs Cleaning			
8. Fan Deck Floor			
9. Fan Deck Floor Supports			
10. Fan Cylinders			
Wood			
Steel			
Presite			
11. Fan Beams and Connecting Framing			
12. Motor and Geareducer Mounts			
13. Doors and Dampers			
14. Partitions			
15. Eliminators			
16. Fill			
Water Distribution:			
Uniform ____ Not Uniform ____			
17. Structural Members			
Columns			
Girts			
Diagonals			
18. Collecting Basin			
Wood			
Concrete			
19. Sump and Screen			
20. Overflow			

Condition: 1-Good; 2-Repair; 3-Replace	1	2	3
21. Coil Shed			
22. Heat Exchanger Coils			
23. Fan			
Diameter ____ Type ____ Blades ____			
Hub			
Cover			
Tip Clearance			
Blade Pitch			
No Vibration ____ Vibration ____			
24. Geareducer			
Quiet ____ Noisy ____			
Series ____ Ratio ____			
Oil Level			
Oil Seal Condition			
Vent			
Back Lash			
Pinion Shaft Play			
Fan Shaft End Play			
25. Driveshaft			
Type			
26. Motor			
Name Plate ____ HP ____ RPM ____			
Phase ____ Cycle ____ Volts ____			
Amperes ____ Frame ____			
Type ____ Mfr. ____			
Operating Voltage ____ Amperage ____			
HP Approx. ____			

General Comments: _____

Example 5.2.

2. The bimonthly inspection is made with special emphasis on the following checks:

   WARNING: Be sure that the main switch is locked out before entering the fan cylinder.

   a. Check the speed-reducer lubricant for evidence of sludge or condensation. If the lubricant is contaminated, flush and refill the speed reducer.

   b. Check the drive-shaft alignment and coupling condition. Align the drive shaft, if necessary, and replace worn or damaged couplings.

   c. Check the condition of the fan blades and hub. Be sure the attaching bolts and cap screws are in good condition.

   d. Check and tighten, as required, the bolts holding the mechanical equipment to the tower framing.

   e. Clean the water-distribution system as required.

3. Every six months:

   a. Drain, flush, and refill the speed reducer with oil.

   b. Check the condition of the tower structural-members, end wall casing, louvers, stairway, distribution system, fill, and drift eliminators. Replace or repair any damaged members. Tighten the structural-member bolting if necessary. Test the structural wood for indication of a fungus attack by probing or testing with a hammer for soft spots. Infected members should be replaced.

5.3f. Chemical Conditioning of Tower Water

Water-conditioning procedures and chemical additions are employed to accomplish a number of objectives. Some of these are:

1. A continuous chromate feed (Nalco 360 balls) is used to maintain a protective film on metal components. It is essential for the pH to be held between 7.0 and 7.5 for this treatment to be effective.
2. Periodic additions of Nalco 321 liquid and Nalco 21-S balls will control microbiological growths in the cooling-tower system and limit deterioration of the redwood lumber.
3. Close control of the total solids in the system is essential for the chemical treatment to be successful at a minimum cost. If the total-solids content is permitted to rise too high, there is some risk of solids deposition on the heat-transfer surfaces. On the other hand, too low a total-solids content indicates excessive blowdown and excessive costs for treatment chemicals and water.

Chromate Treatment

The chromate treatment should be started as soon as the tower basin is filled and circulation is established. The continuous injection of Nalco 360 balls into the system is set as follows:

1. Immerse the Nalco tube feeder, located inside the basin near the south door on the east side of the tower, about 4 in. into the water and fill the tube with Nalco 360 balls.
2. One hour after the feeder is immersed in water, determine the chromate content of the system. See section, "Chromate Analysis", page 5-75.

3. The chromate level should be 10 to 15 ppm. If it is greater than 15 ppm, withdraw the tube slightly from the water. If less than 10 ppm, immerse the tube further into the water.
4. Continue the chromate analysis every hour until the system is stable at 10 to 15-ppm-chromate.
5. Analyze for chromate content at least twice per shift during normal operation. Adjust the tube feeder as required to maintain the desired chromate level.
6. Fill the tube feeder with Nalco 360 balls as required.

Biocide Treatment

The periodic injections of biocides to control microbiological growths should be performed as follows:

1. After the tower basin is filled and water circulation is started, the following chemicals should be added.
   a. Slowly add 5 gallons of Nalco 321 liquid to the south end of the tower basin. This quantity should be added over a period of 30 to 45 minutes.
   b. One day after adding the Nalco 321 liquid, add 114 pounds (100 balls) of Nalco 21-S by suspending it in a wire mesh basket in the south end of the tower basin.
2. Repeat the treatment of Nalco 321 liquid each week.
3. Repeat the treatment of Nalco 21-S balls each month, one day after the Nalco 321 liquid has been added.

Total Solids Control

The water blowdown to control total-solids content should be started not more than 24 hours after the heat load has been placed on the tower. The blowdown rate is set as follows:

1. Sample the water and analyze it for total-solids content. See section, "Total-Solids Analysis with a Nalcometer", page 5-75. The desired concentration ratio is 7 to 1. The total-solids concentration analysis should be performed on make-up water using the Nalcometer. Once each day, on the 8-4 shift, a total-solids analysis should be made on the tower water. About every 6 weeks, a sample of process water will be sent to the lab for total-solids determination. This will be used to calibrate the Nalcometer.
2. If the total-solids content is greater than the 7:1 ratio, start the blowdown water flow.
3. The blowdown rate will be approximately 40 gpm at equilibrium to maintain the desired ratio.
4. Under normal operating conditions, the total-solids content of the tower water will be determined each day (8-4 shift) and the blowdown rate adjusted accordingly.

pH Control

Since the solids in the process water fed to the basin are being concentrated because of the high evaporation rate, the pH of the system tends to rise, primarily due to the increased concentration of $CaCO_3$. A high pH is very deleterious to the wood in the cooling tower, so sulfuric acid is fed into the system to lower the pH. However, this acid addition must be very carefully controlled since an excessive amount of acid would be very harmful to the metallic components of the system. Also, the chemicals employed for corrosion and microbiological growth control are designed to function best in the pH range of 7.0 to 7.5. Control of the pH is

normally effected through an automatic-control system as described below. Manual operation may become necessary at times and a constant watch must be maintained to assure that the controls are operating properly. It is the purpose of this procedure to describe the control system and to outline the daily operational procedure.

The pH-control system at the reactor cooling tower consists of:

1. A 900-gallon-capacity storage tank for concentrated H_2SO_4.
2. Two variable-stroke metering pumps.
3. A constant-flow pH probe.
4. A local pH-indicating modifier.
5. A control-room pH recorder with high and low alarms.
6. A control-room controller with an "auto-manual" switch and a pumping-rate indicator.

When the system is in automatic, a signal from the probes is transmitted through appropriate wiring to the local indicating modifier, AM-7. The output of the local indicating modifier is a 0 - 10 millivolt electrical signal to the control-room recorder, AR-7. Microswitches in AR-7 give an alarm if the pH drops below 6.75 or rises above 7.75. Recorder AR-7 also contains a control slidewire which covers 20% of the range of AR-7. Voltage which varies with the pH recorded is "picked off" this slidewire as a signal to controller AC-7. The output signal (0-5 milliamps) from controller AC-7 is transmitted to an electrical-pneumatic converter in the secondary pump house. This signal is indicated in the control room (AC-7) and in the secondary pump house (Al-7). The converter's pneumatic output (3-15 psi) supplies a "coniflo" positioner at the metering pump selected for service. The "coniflo" positioner determines the pumping rate by varying the length of stroke of the pump.

The milliamp signal to the electrical-pneumatic converter is controlled by the operator when in the manual mode through use of the "current adjust" knob on the face of the controller in the control room.

Placing the System in Service

NOTE: The acid-metering pump selected for service (the selector switch is located on the No. 2 acid-metering-pump breaker box at the pump house) will automatically start when one of the reactor secondary pumps is running and the secondary bypass valve is less than 90% open. These conditions prevent the pumping of acid into the tower basin when there is no flow over the tower. It is evident, then, that the acid-addition system should be readied for service before the secondary system is started. If it is not practical to ready the acid system, the disconnects for the acid-metering pumps should be opened before starting the secondary system.

1. Open the inlet and exit valves at the metering pump.
2. Close the breaker for the selected metering pump.
3. Open the inlet valves to the pH probe and rotate the cleaner blade of the strainer.
4. Place the system in "automatic" or "manual" mode, as deemed necessary, by use of the switch in the control room.
5. After secondary flow has been established over the tower for a period of 15 to 20 minutes, begin the sampling procedure as outlined below.

Sampling Procedure

To assure proper operation of the automatic control or to provide a basis for adjustment if in "manual", it is normally necessary to sample the secondary stream at three-hour intervals. More frequent checks are

necessary when the condition of the reactor system is undergoing rapid changes.

1. Collect a sample of the secondary water from the sampling station provided in the secondary pump house. Secondary water should flow through this line continuously; if not, then start a flow and allow sufficient time for the sample line to be cleared of stagnant water before sampling.
2. Measure the pH of the sample using the portable pH meter provided at the secondary pump house. Be assured that the meter is operating properly, using a buffer solution to check if necessary.
3. Adjust the acid flow to obtain a pH of 7 to 7.5 if in manual.
4. If in automatic, compare the reading obtained with the portable instrument with the indicated pH at the local panelboard. The two should agree within reasonable limits (difference of 0.2 pH units).
5. Rotate the "tee" handle on the filter several times to clean the plates in the filter.
6. Check that the flow across the probes is about 0.2 gpm.

Removing the System from Service

1. No action is necessary for short-term shutdowns.
2. For shutdowns lasting several days, or during which experimental or maintenance work will be done at the secondary system, the following steps are necessary:
   a. Open the breakers supplying the metering pumps. Tag with a properly completed "DO NOT OPERATE" tag.
   b. Close the inlet and exit valves at the metering pumps.

5.3g. Chemical Hazards

This section is intended to provide detailed information on those chemicals which are used in the secondary system to provide protection for components. There is also information relative to the hazards of the chemicals and the precautions to be taken when handling them.

Nalco 21-S

This kills microorganisms and prevents slime accumulation. It is a treatment with nonoxidizing characteristics for prevention of wood rot in the cooling towers. It may be irritating to the skin and eyes; therefore, contact with the skin, eyes, and clothing should be avoided. Also, avoid breathing the dust or solution spray. It should not be taken internally. In case of contact, immediately flush the skin or eyes with large amounts of water.

Nalco 321

This is used to control slime and microbiological activity. It produces a corrosion-resistant film on metal surfaces in contact with the water. Avoid getting it in the eyes, nose or on the skin. In case of contact, immediately flush the skin or eyes with large amounts of water. It should not be taken internally. Nalco 321 should be kept away from open flame or excessive heat and should not be stored in temperatures above 130°F.

Nalco 360

This is a corrosion inhibitor that protects all metals commonly found in cooling systems. Chromate analysis provides a quick means for controlling the concentration. Chromate products may cause local irritation of mucous membranes and skin and can produce harmful effects if swallowed

or inhaled. Avoid contact with the eyes and prolonged or repeated exposure to the skin. Avoid breathing dust or solution spray. Do not take internally. In case of contact with the skin, flush the area with plenty of water; for eyes, flush with water for at least 15 minutes and get medical attention. Nalco 360 contains approximately 50% chromate as arsenous chromate. It should be stored in a nonhumid area.

Sulfuric Acid

The solids in the process water fed to the basin are being concentrated because of the high evaporation rate. This tends to raise the pH primarily due to the increased concentration of calcium carbonate. A high pH is deleterious to the wood in the tower, so sulfuric acid is fed into the water to maintain the pH where the chemicals used to control the corrosion and biological growth are designed to function best, in the pH range of 7.0 to 7.5. Avoid contact with the skin, eyes, and clothing. Handling sulfuric acid is very hazardous. It should not be taken internally. In case of contact, immediately flush with plenty of water, then get medical attention. If taken internally, ~~try~~ to vomit--drink soapy water, oil, or other emetics. Get medical aid immediately.

5.3h. Procedures for Operating Chemical Testing Instruments

Beckmann pH Meter

Determination of the pH is made on a number of water samples. In all cases, reasonable precautions should be taken to get a representative sample. That is, clean sample containers should be used and they should be rinsed with the sample. The sample lines should be thoroughly purged and an adequate sample should be obtained.

After a proper sample has been obtained, the pH meter should be checked. Normally, the meters are left plugged into a 110 V a-c. supply with the electrodes in water. If the meter is not plugged in, take the following steps:

1. Set the mode switch to "start".
2. Plug the power cord in the 110V a-c. socket.
3. Wait 5 minutes for the meter to warm up.

Standardize the meter as follows:

1. Place the mode switch in "neut" position.
2. Rinse the electrodes with buffer solution and wipe them clean with tissue.
3. Immerse the electrodes in buffer solution and place the mode switch in the proper pH range.
4. Set the "temp-^{o}C" dial to the temperature of the buffer solution.
5. Adjust the "standardization" control until the meter needle indicates the exact buffer pH.
6. Place the mode switch in "neut" and move the dial pointer to mark the needle position.

After the meter has been properly standardized, a series of pH measurements can be performed as follows:

1. Place the mode switch in "neut" and adjust the "standardization" control, if required, so the needle rests at the dial-pointer position.
2. Rinse the electrodes with sample solution and wipe them clean with tissue paper.
3. Immerse the electrodes in the solution to be tested.

4. Place the mode switch in the proper range and read the indicated pH on the meter.
5. After the measurements are complete, rinse the electrodes with water and leave them immersed in water.

WARNING: Never leave the electrodes immersed in chromate solution.

Chromate Analysis

The secondary water systems are treated with a chromate solution to retard corrosion. The water must be analyzed for its chromate content so that the proper level can be maintained. A Nalco Chromate Test Kit is used for this analysis, and the proper procedure is as follows:

1. Measure 100 ml of secondary water into an Erlenmeyer flask.
2. Add 5 ml. of C-1 solution to the sample with a pipette.
3. Add 5 ml. of C-2 solution to the sample with a second pipette.
4. Add 1 ml. of C-3 solution to the sample with a 1-ml. pipette. The solution will be blue-black in color.
5. While agitating the solution in the flask, add the C-4 solution one drop at a time with the dropper held in a vertical position. Count the drops until the solution just loses its blue-black color.
6. Multiply the number of drops of C-4 added in step No. 5 by five (5) to obtain the ppm of chromate.

WARNING: Avoid contaminating Nalco solutions with each other. Use separate pipettes for each solution.

Total-Solids Analysis with a Nalcometer

For the proper operation of the cooling-tower system, it is necessary to control the total-solids dissolved in the secondary water. The total-

solids analysis is routinely performed with the Nalcometer as follows:

1. Fill the Nalcometer cup with the solution to be tested.
2. Add one drop of phenolphthalein and proceed to the next step if the solution remains clear. If the solution turns pink, add sulfuric acid drop-by-drop with agitation until the solution is clear again.
3. Immerse the Nalcometer probes in the cup.
4. Set the pointer on the meter at the temperature of the solution.
5. Set the scale switch on the No. 3 scale (10 ppm).
6. Move the left-hand dial until a minimum black line appears in the "eye".
7. Read the number on the dial directly above the temperature pointer. Multiply this number by 10 ppm to get the total-solids.

5.3i. Description of Tower Components

To aid in properly inspecting the cooling tower, the various components, their purposes, and the method of operation will be briefly discussed. These items should be familiar to everyone inspecting the secondary system.

Speed Reducer

The speed reducer is the heart of the tower. It receives power from the high-speed motor, reduces the speed, and increases the torque to drive the fan blades. It is subject to extreme service wear and warrants careful attention and maintenance.

The power-input shaft is held in place within the pinion cage by a set of roller bearings. The output shaft, or fan shaft, is perpendicular

to the input shaft and is also held in place by roller bearings. Spiral level and helical gears within the reducer change the direction and reduce the speed of the power applied.

Wear develops first in the shaft bearings, both pinion and axle, resulting in loose shafts. Wear can also develop between the gears, resulting in excessive backlash.

As a preliminary check on the condition of the speed reducer:

1. Try to move the pinion shaft up and down or sideways (indicating pinion bearing wear).
2. Try to move a fan blade up and down (indicating fan-shaft bearing wear).
3. Hold the fan still and rock the drive shaft back and forth (indicating backlash).

If excessive movement is noted at any point, have the drive shaft disconnected and see if the pinion shaft can be moved in and out of the pinion cage. The pinion shaft bearings are set to slightly preload the roller bearings; therefore, any movement of the pinion shaft indicates wear of the roller bearings. If movement is detected, the bearings should be removed for inspection and replaced if damaged or severely worn.

The bearings on the fan shaft can be checked for wear by moving a fan blade up and down and observing the movement of the fan shaft with reference to the top of the speed-reducer casting. Relative movement of this shaft should be slight. Any excessive movement indicates that the speed reducer should be opened and the shaft bearings inspected.

Excessive gear wear can be determined by the degree of backlash or movement of one of the shafts with the other shaft locked. Too much back-

lash indicates wear of the gear teeth and bearings. These should be inspected and replaced if necessary.

The speed reducer must operate as a unit. Excessive wear or vibration at any one point may impose loads on other parts which lead to their failure. Therefore, the entire unit should be inspected frequently and kept well adjusted.

Due to the severe atmospheric conditions encountered at the top of a cooling tower, it is easy for moisture to contaminate the gear-reducer lubricant. Any time this oil becomes contaminated, it must be drained, the case flushed out, and the proper lubricant replaced. Two types of contamination can be present, sludge and water condensation.

To check for condensation, heat a metal plate to between 300° and 350°F and place a few drips of gear-reducer oil on it. If the oil boils and foams, it indicates the presence of water. If it merely spreads out and smokes, there is no water present.

To check for sludge, examine the filter cartridge by unscrewing the cap screw and removing the filter-case cap. Inspect the outside of the filter cartridge. If the filter is not dirty, reassemble and refill the system with oil. If it is dirty, the cartridge must be replaced. If the cartridge is exceptionally dirty, inspect the inside of the gear reducer for sludge.

If either sludge or moisture are found in the lubricant, it must be drained, the case flushed out with flushing oil, and refilled with clean oil.

Drive Shafts

The drive shaft connects the motor, located out of the hot, humid

air stream, to the gear reducer in the center of the fan cylinder. It has flexible joints at both the motor end and the speed-reducer end; yet, it is still the major source of vibration in the mechanical equipment. Excessive vibration is cause for shutting the fan down and realigning or balancing the drive shaft.

In the event that the drive-shaft guards are removed for maintenance, they must be reinstalled before the tower is put back into service. Failure of the drive shaft, unprotected by the drive-shaft guards, can result in excessive damage to the fan and speed reducer.

Fan Assembly

The fan assembly consists of a steel hub, turned by the fan shaft, with the blades attached in radial sockets. Normally, the fan does not require much maintenance, but any unusual noise or vibration is cause for shutting the unit down for inspection. The entire assembly should be closely checked bimonthly to determine that all parts are in good condition and that all assembly bolts are tight. The blades should also be inspected for cracks at the blade attachment and at points where fatigue might be concentrated.

The cooling-tower fans have been balanced. If it is necessary to replace or repair any part of the fan assembly, the balance must be checked when it is first put back into operation. An unbalanced fan assembly will result in vibration and abnormal loads being imposed on the other units of the fan drive.

Tower Lumber

The wetted wooden portions of the cooling tower are redwood, which resists deterioration. However, it is till subject to attack by chemical

agents and fungi. The water chemical treatment is designed to minimize this wood deterioration but cannot eliminate it completely.

Chemical attack on tower lumber is a form of deterioration in which oxidizing agents and alkalies attack lignin and also remove materials naturally present which are toxic to wood-destroying organisms. Oxidizing agents such as chlorine can cause very serious damage. Evidence of chemical attack (delignification) can probably be found during the earliest stages of attack in the most heavily wetted and washed portions of the tower wood.

Fungus attack is the decomposition of wood by microorganisms. These microorganisms utilize wood as food. They are everpresent in decaying wood in the forests, and their spores are easily blown by the wind into the cooling tower.

Fungus attack can be classed as white rot, brown rot, and soft rot. White rot decomposes all components of the wood lignin and cellulose. Look for a spongy, stringy condition of the wood and also pockets of white or yellow fibrous material. Brown rot decomposes the cellulose, leaving the lignin more or less unaffected. The wood is reduced to a brown mass which powders easily in the fingers. Both white and brown rots usually leave the surface intact and it is necessary to probe beneath the surface of the wood to detect their presence. These fungi are usually found in the non-flooded zones of the tower.

Soft rot usually takes place in the flooded zones. Attack starts on the surface and progresses inward. It is identified by loosening of surface fibers, eroded surface, and loss of strength. Surface checks across the grain are frequently visible after the wood has dried.

Samples of fill and drift eliminator both should be broken and the interior examined for a darkening in color. The manner in which the wood breaks should be noted--infected woods tend to break straight across the grain with little or no splintering.

Tower Hardware

All metal parts in the cooling tower are subject to severe corrosive conditions. Special attention should be given to surface protection. Structural bolts must be kept reasonably tight and in good condition. In the event of failure through corrosion or other causes, bolts, nuts, and other hardware must be replaced as required. All structural steel must have a good protective coating (paint) at all times.

5.3j. Heat Exchangers, Maintenance

At regular intervals, as determined by the reactor supervisor, the interior and exterior of all tubes should be examined and cleaned if necessary. Neglect in keeping all tubes clean may result in complete stoppage of flow through some tubes, with consequent overheating of these tubes as compared to surrounding tubes, resulting in severe expansion strains and leaking tube joints. Also, a light sludge or scale coating on the tube greatly reduces its effectiveness. A marked reduction in performance usually indicates cleaning is necessary if the unit has been checked for air or vapor binding and such binding is not the case. Since the difficulty of cleaning increases rapidly as the scale thickens or deposit increases, the intervals between cleanings should not be excessive.

To clean or inspect the insides of the tubes, remove the channel cover and bonnet. Do not remove the channel. Caution - do not loosen heads

until assured that all pressure is off the equipment and the unit is drained.

To locate either leaking joints between tubes and tube sheet or a split tube, it is necessary to remove the channel cover and bonnet, and apply hydraulic pressure in the shell. The point where the water escapes indicates the defective tube or joint. Use only cold water for the hydrostatic test. Hot water will expand the tubes more than the shell, resulting in excessive strain and probable damage.

Scale removal from the tubes may be accomplished either by use of suitable, commercially available, cleaning compounds or by merely circulating high velocity water. Qualified experts from other divisions within the laboratory may be called upon to check the nature of the deposits to be removed, furnish proper acid solutions containing inhibitors, and provide equipment and personnel for a complete cleaning job. If the above methods are ineffective, hard scale may be removed by mechanical means. Caution - do not attempt to clean tubes by blowing steam through individual tubes.

Gaskets and gasket surfaces should be thoroughly cleaned and should be free of scratches and other defects. Gaskets should be properly positioned before attempting to retighten bolts. It is recommended that when a heat exchanger is dismantled for any cause, it be reassembled with new gaskets. This will tend to prevent further leaks and/or damage to the gasket seating surfaces of the heat exchanger. Composition gaskets become dried out and brittle so that they do not always provide an effective seal when reused. Metal or metal-jacketed gaskets, when compressed initially, flow to match their contact surfaces. In so doing they are work hardened

and if reused, they may provide an imperfect seal or result in deformation and damage to the gasket contact surfaces of the exchanger.

5.4. Reactor Water, Temperature Control System

5.4a. Description of the System

The cooling system for the Oak Ridge Research Reactor has been expanded to allow continuous operation of the reactor at its present maximum power level of 30 Mw. A two-section Marley cooling tower has been installed with a four-unit Crane water-to-water heat exchanger to isolate the reactor loop from the tower loop. Figure 5.6 shows the basic flow diagram of the system for which temperature control is required.

The new system replaces eight Trane water-to-air heat exchangers used under the former 20-Mw operation. The Trane system remains for emergency service and may allow higher reactor power levels in the future.

The reactor or primary loop is a closed loop of demineralized water recirculated through the reactor and the heat exchanger at a rate of 18,000 gpm. The secondary loop is semi-closed with the water recirculated through the heat exchangers at a rate of 10,500 gpm. The cooling tower is rated at 30.78 Mw at design conditions of 10,500-gpm water flow rate, 104°F inlet temperature, and a 78°F ambient wet-bulb temperature.

5.4b. Objectives of the System

The objectives for the temperature-control system are as follows:

1. To maintain steady-state (constant reactor power level) control of the reactor inlet temperature to within ± 0.25°F.
   a. It is important to minimize the fatiguing of the reactor structure which results from stresses produced by temperature cycling.

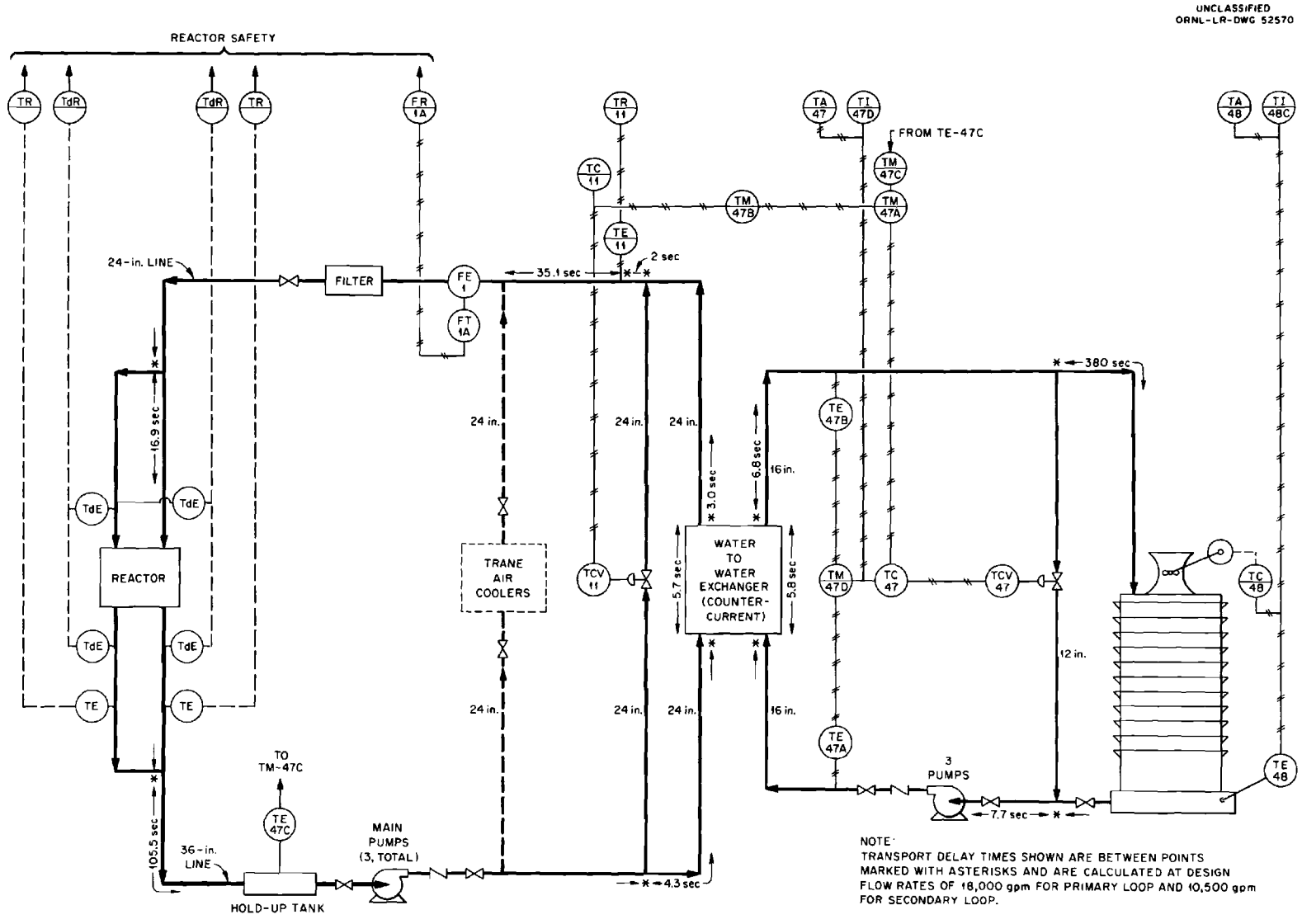

Fig. 5.6. Basic Cooling Water Flow Diagram

b. The most accurate method of obtaining reactor power is to compute it from reactor cooling water flow and the temperature rise across the reactor. Since there is a transport delay across the reactor, if the inlet temperature is changing, the measurement of the temperature differential and consequently the calculated power, is incorrect. The differential temperature is only 11° to 12°F at the 30-Mw power level; an error in the differential temperature measurement of 0.5°F will result in a 4% error in calculated power.

2. To provide a system of sufficiently fast response that the reactor operation will not be inhibited by the temperature control system.

   a. When the reactor is unexpectedly shut down by abnormal conditions, Xenon poisoning makes it mandatory to return to power within a short time or else suffer a delay for a change of reactor fuel. The cooling system must, therefore, be capable of control with a reactor power cycle from the 30-Mw power level to essentially zero power and, thence, rapidly back to the 30-Mw power level.

   b. Good transient response reduces the danger of overheating the reactor fuel and reactor structure on rapid power increases. The operating conditions at 30 Mw are such that very little or no temperature overshoot is permissible.

   c. A fast response system is required to prevent recirculation of temperature transients around the primary cooling loop. The long loop time and low natural damping enhances the problem as has been exhibited in the past.

3. To provide a design that will allow use of the Trane water-to-air heat exchangers with the cooling tower. The design must allow operation with either system individually or both in parallel.
4. To provide a design such that the failure of control valves within the water loops will not result in an abrupt loss of cooling to the reactor. This dictates the use of "fail-closed" bypass valves rather than a series of throttling valves in the cooling loops. Thus, the most probable valve failure will not stop cooling water flow and will allow maximum cooling.

5.4c. System Design Problems

The design of the temperature-control system presented three fundamental problems as follows:

Slow Thermal Response of the Tower

The first problem was to adapt the sluggish thermal response characteristics of the cooling tower to the extremely fast response of the reactor. The basin of the cooling tower contains some 60,000 gallons of water which, if totally circulated, gives a transport time of some 380 seconds for the water to travel from inlet to outlet of the tower. The reactor, on the other hand, is capable of an exponential power increase from 0.3 Mw (N_L) to 30 Mw (N_F) in 90 seconds under servo control. This is an exponential rise, the rate of which approaches 1.5 Mw/sec between the 20 Mw and 30 Mw level. Obviously, the temperature of the tower basin cannot be made to respond fast enough to cope with fast reactor power changes.

Synchronization

Problem number two was to synchronize the required rapid changes in

cooling capacity with the changes in reactor power level after an appropriate delay. The primary water loop is essentially a long heat-conveyor system. Heat losses in the piping are relatively small compared to the total heat to be removed. The long length of the loop compared to the diameter of the piping prevents any appreciable mixing of the water and equalization of the temperature around the loop. The heat-conveyor loop is thus loaded at the reactor end and unloaded at the heat exchanger end. From Figure 5.6. it is shown that:

1. The loading time is short--the water transport time through the heat exchanger is approximately 5.7 seconds; and
2. The transport time from the reactor to the heat exchanger, by comparison, is long, approximately 117.3 seconds. This long transport lag system with short load and unload times is conducive to recirculating temperature transients. Rapid changes in reactor power induce transients in the loop. The transients must be sensed before reaching the heat exchanger and, after proper delay time, the rate of heat removal at the heat exchanger must be altered such that exactly the right amount of heat is removed at exactly the right time. This prevents the transients from recirculating.

Large Control Range

The final problem was to provide a large dynamic range of control of cooling capacity. On a hot summer day the full cooling capacity of the tower is barely sufficient to handle the 30 Mw of heat generated by the reactor. On a cold winter day, however, the full tower capacity may be as high as 70 Mw. Since the reactor will operate at power levels as low as a few megawatts at times, the required dynamic control range is large.

If constant temperature must be maintained during a setback (1% of power) period of up to 30 minutes, the required dynamic control range would be 250 to 1. A good single stage control system would normally have a dynamic range of 10 to 1.

5.4d. Mode of Control

The varied control problems outlined make it impossible to obtain the required degree of temperature control with a single simple control system. By employing several simple control systems, however, with proper interconnection such that the over-all control is the sum of the control afforded by each, the design objectives are reached. Three systems are used:

1. Tower Control System--controlling the temperature of the cooling-tower basin.
2. Secondary Control System--controlling the mean temperature of the secondary side of the heat exchanger.
3. Primary Control System--controlling the temperature of the water returning to the reactor.

The ultimate objective is the $\pm$ 0.25°F control of the primary water passing through the reactor. The three systems, in the order listed, lead progressively toward this end, i.e., control of the tower-basin temperature allows the secondary temperature to be regulated and control of the secondary allows close control of the primary temperature. In this way, fast response and a fine degree of control are attained. Figure 5.7 shows these three control systems on a basic flow diagram.

UNCLASSIFIED
ORNL-LR-DWG 46437

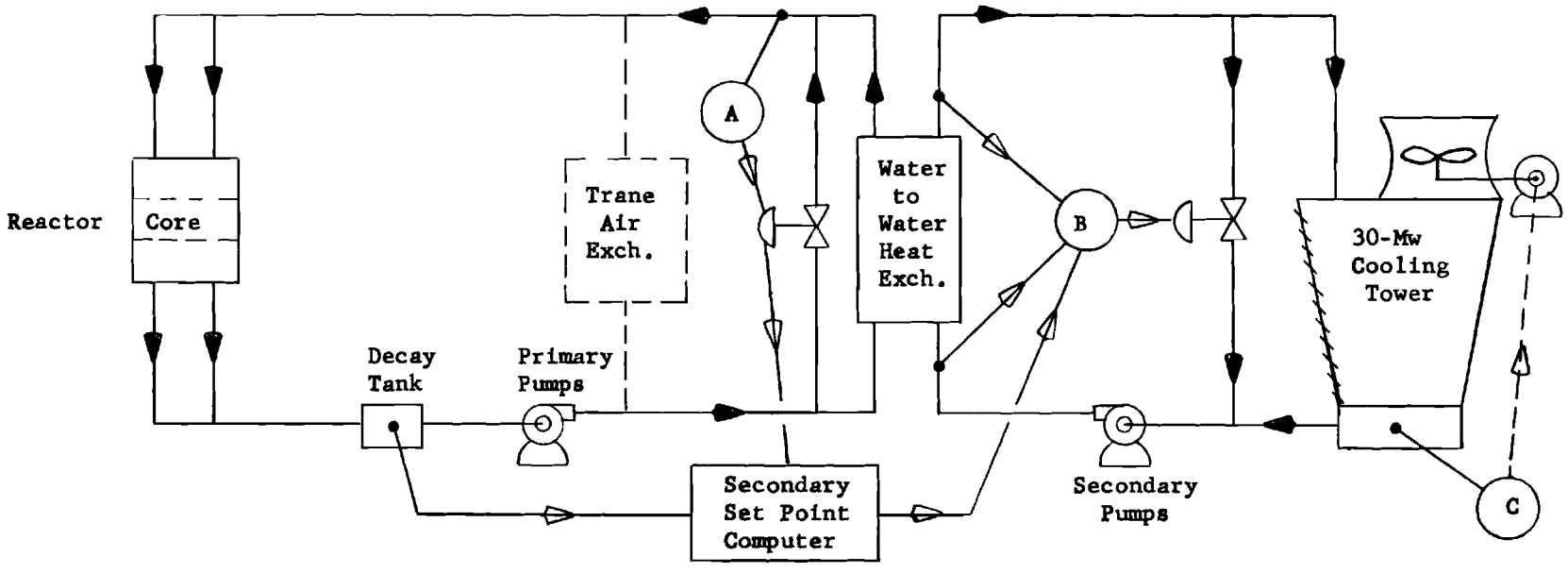

Fig. 5.7. Basic Flow Diagram with Three Temperature Control Loops Shown

All three of these control systems are designed around simple temperature control. The primary control system has a fixed setpoint designed to maintain a constant cooling water temperature determined by the desired power level of the reactor. The constant temperature is accomplished by adjusting, by means of a bypass valve, the amount of cooling water flowing through the primary-to-secondary heat exchanger. At the other end of the cooling system, the tower basin is also designed to operate at a constant temperature. The basin may be regarded as an infinite heat sink from which the primary system may draw varying amounts of cooling capacity as the situation demands. Its temperature is maintained slightly below the level required for dissipation of full reactor power, and thus cooling capacity is immediately available. In between is the primary-intermediate link. It provides for transference of the cooling potential from the basin to the primary loop. In effecting the transfer, the temperature set-point of the secondary is made to vary in response to conditions from two sources:

1. Fluctuations in the reactor power level--providing more cooling water from the basin if the power goes above the desired level and less if it goes below.
2. Adjustments already made in the primary system.

When a fluctuation occurs in the power level, the primary control system responds immediately, opening or closing the primary bypass valve to meet the new demand. The secondary system then continues to alter its setpoint until no correction is necessary by the primary system. This allows the primary bypass valve to return to its equilibrium position, approximately 45% open, again ready for optimum response, in either direc-

tion, to further sudden fluctuations in power level. Summation of the two conditions determining the secondary control setpoint is made by a simple pneumatic analog computer. The computer output is used to regulate a by-pass valve on the secondary side of the heat exchanger, giving a secondary control action similar to that in the primary.

Thus by the interconnection of three control systems, the conditions for rapid and optimum control response are provided in the primary control system. The system adapts the slow response of the tower basin to the fast responses of the reactor and is able to damp out transients. Each of the three systems will next be considered in detail.

5.4e. Tower Control System (Elementary Inst. Flow Diagram Q-1594-28)

The cooling tower provides a link between the cooling system and the atmosphere. Heat absorbed by the cooling system from the reactor is transferred to the atmosphere when water from the secondary cooling loop is made to cascade down through the tower against a forced upward draft of air. The flow of air is maintained in the two-cell tower by a two-speed fan in each cell. Each fan can be operated independently, thus providing five steps of control for the two cells considered as a unit; i.e., off-off, low-off, low-low, high-low, and high-high.

The heat dissipating capacity of the cooling tower is a function of several parameters. An approximate formula as derived from data furnished by the Marley Company is as follows:

$$Mw = \%Fw \quad (0.35T_i - 0.69T_{wb} + 34.4)(\%S_f) + (0.72T_i - 0.18T_{wb} - 47.06)$$

where: Mw = heat dissipation in megawatts (rated at 30.78)

$\%F_w$ = % of rated water flow over the tower (rated at 10,500 gpm)

T_i = inlet water temperature to the tower in ^oF (rated at 104°)

T_{wb} = ambient air wet-bulb temperature in ^oF (rated at 78°)

$\%S_f$ = % full fan speed (both fans on high)

This formula is correct when the parameters are at or near rated values for the tower. How nearly correct it is when the parameters differ widely from rated values is not known. The formula, therefore, should not be used for evaluation of tower performance but it is useful in understanding tower operation. Figure 5.8. shows curves of the expected cooling capacity as derived from this formula. From these curves it is shown that at full-rated water flow, 104^oF inlet water temperature, and an ambient wet-bulb temperature of 78^oF, the tower cooling capacity may be varied from 13 to 30 Mw by varying the fan speed. With ambient wet-bulb temperature lowered to 55^oF, the range is 18 to 50 Mw via fan speed, and with the ambient wet-bulb temperature further lowered to 32^oF, the range is 22 to 70 Mw via fan speed.

The tower control system maintains the temperature of the cooling tower basin at a relatively constant temperature. This utilizes the slow natural response of the tower basin to advantage. Controlling the basin to a relatively constant temperature at a value slightly below the temperature which is required by the heat exchanger inlet for dissipation of full reactor power has several advantages:

1. It reduces the dynamic control range of the secondary and primary control loops making the tower appear to the secondary control loop as essentially an infinite capacity heat sink.

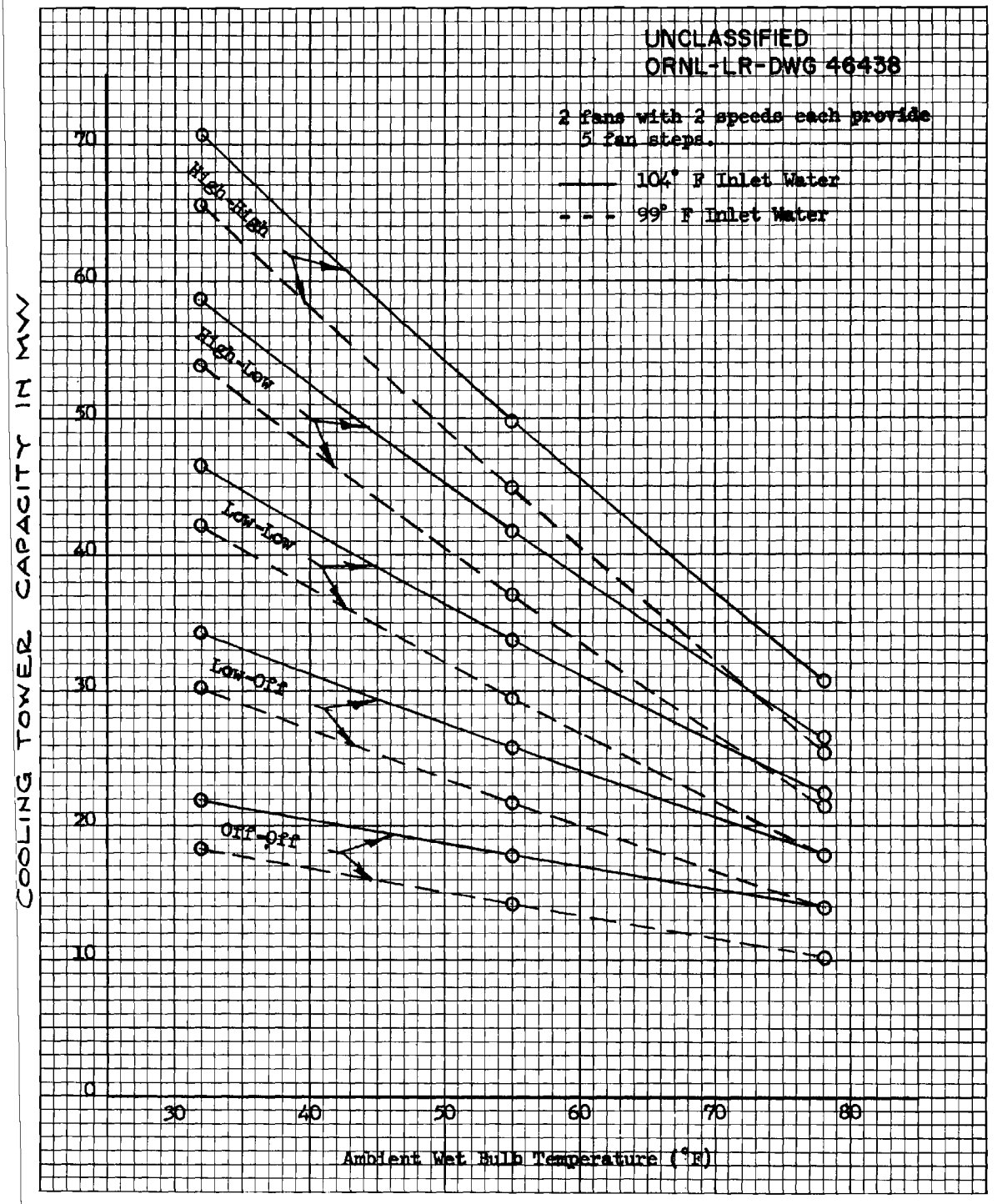

Fig. 5.8. Cooling Tower Capacity at Full Rate Water Flow

2. It prevents transient air temperatures from feeding back into and upsetting the over-all control.
3. It provides a stored cooling capacity allowing rapid increases in reactor power.

A block diagram of the tower cooling loop is given in Figure 5.9. A gas-filled bulb (TE48) attached to a pneumatic temperature transmitter (TT48) is used to measure the basin temperature. A conventional pneumatic controller (TC48) with proportional control action only is used to compare the measured temperature to the setpoint and provide an output pressure signal accordingly. This output pressure in turn operates four pressure switches (TX48A, TX48B, TX48C, TX48D) which in turn operate the two fans to provide the five-step control as described above.

5.4f. Secondary Control System

The secondary control system may be considered as consisting of two parts:

1. A conventional temperature control system.
2. The pneumatic analog setpoint computer.

The control system receives its set point from the computer.

Conventional Control System

Figure 5.10 shows the conventional temperature control system. The mean temperature of the secondary side of the heat exchanger is controlled in such a way that the proper amount of cooling at the right time is supplied to the primary system. Transients are thereby damped out and the primary is maintained in its optimum control range.

UNCLASSIFIED
ORNL-LR-DWG 46439

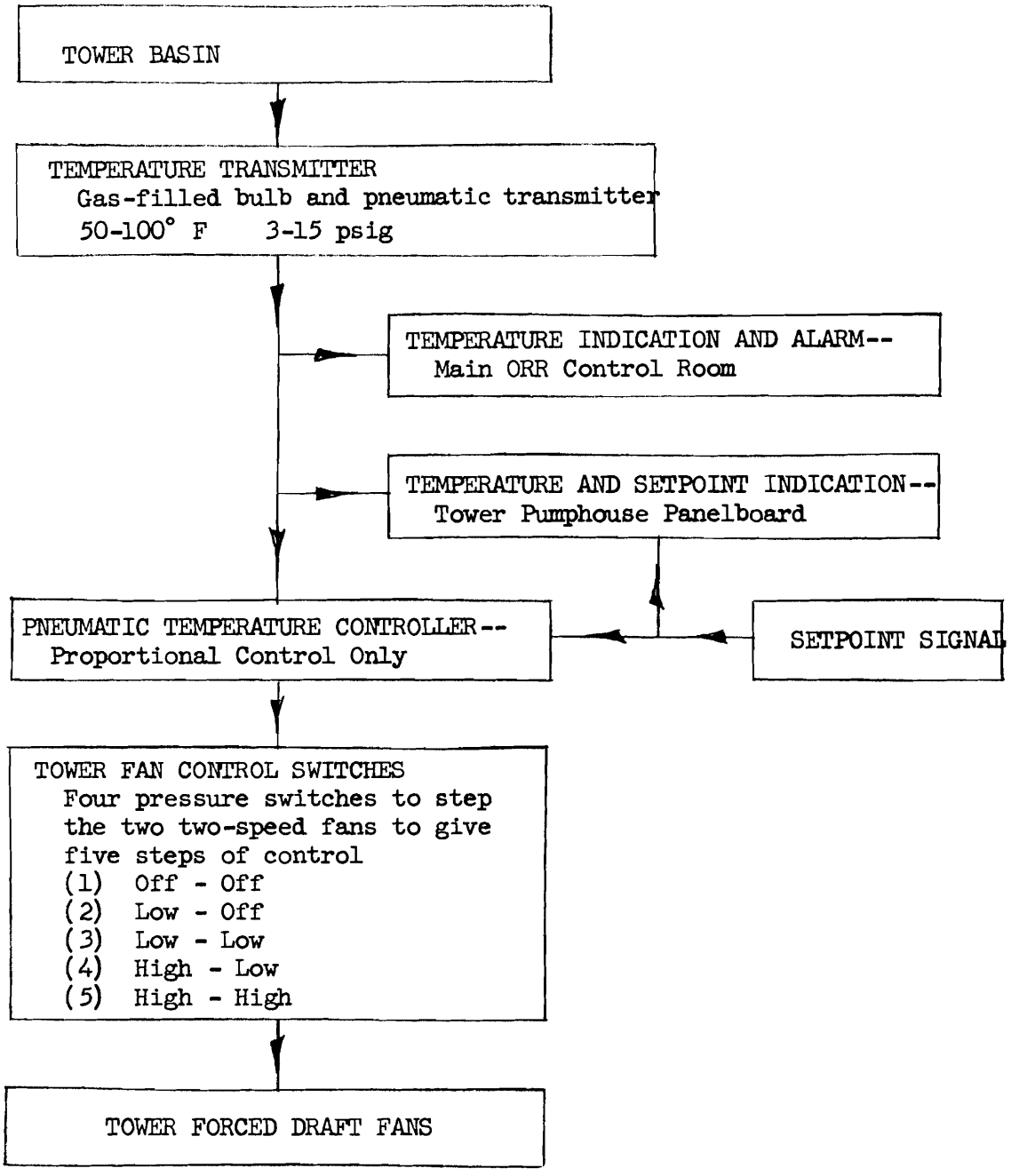

Fig. 5.9. Tower Control System Block Diagram

UNCLASSIFIED
ORNL-LR-DWG 46440

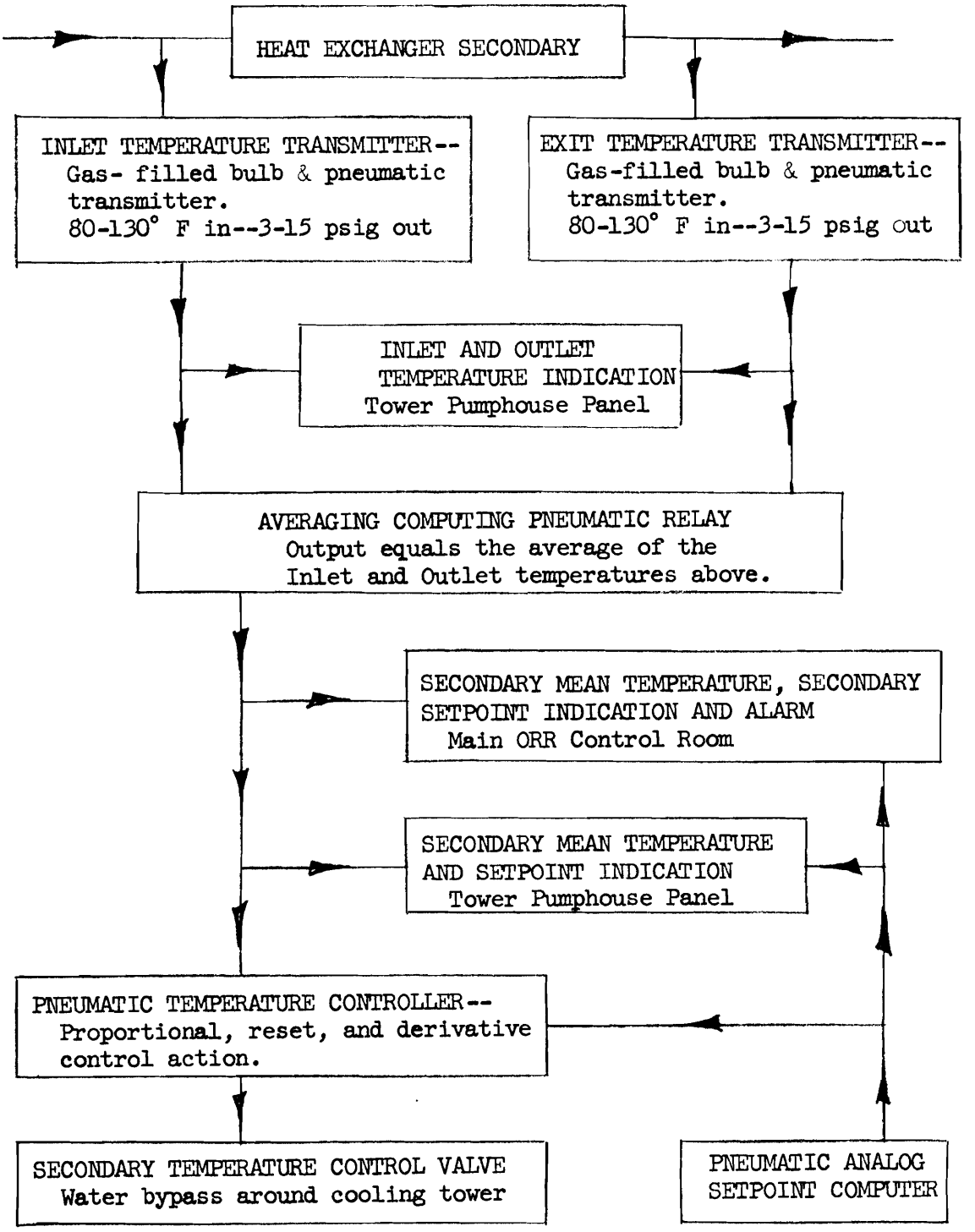

Fig. 5.10. Secondary Control System Block Diagram

Since it is impractical to measure temperatures within the heat exchanger, gas-filled bulbs and pneumatic temperature transmitters (TE47A, TE47B, TT47A, TT47B) on the inlet and outlet water lines are used to provide a mean reading. A simple computing relay (TM47D) has an output which is the average of the two readings. This is considered as the mean secondary temperature which is to be controlled. A conventional pneumatic controller (TC47) then compares this mean termperature to a setpoint provided by the setpoint computer and provides an output control signal to operate the secondary control valve. The valve bypasses outlet water back to the pumps instead of over the cooling tower. By thus controlling the degree of bypassing, the mean temperature of the secondary system is controlled.

Setpoint Computer

Figure 5.11 shows the analog computer used for obtaining the setpoint for the secondary control system. As mentioned, the setpoint is determined by two conditions:

1. Fluctuations in the reactor power
2. Adjustments made to meet this in the primary system.

The computer system may be conveniently approached by tracing the signals from each of these sources.

Reactor Power

The temperature of the cooling water leaving the reactor is taken as an indication of reactor power level. The outlet temperature is measured by a gas-filled bulb (TE47C) and a 3 to 15 psig signal corresponding to a 100-150°F temperature range is transmitted by a pneumatic transmitter (TT47C). A pneumatic computing relay (TM47C) is designed to take this 100-150°F temperature signal, C, compare it with a desired temperature,

UNCLASSIFIED
ORNL-LR-DWG 46441

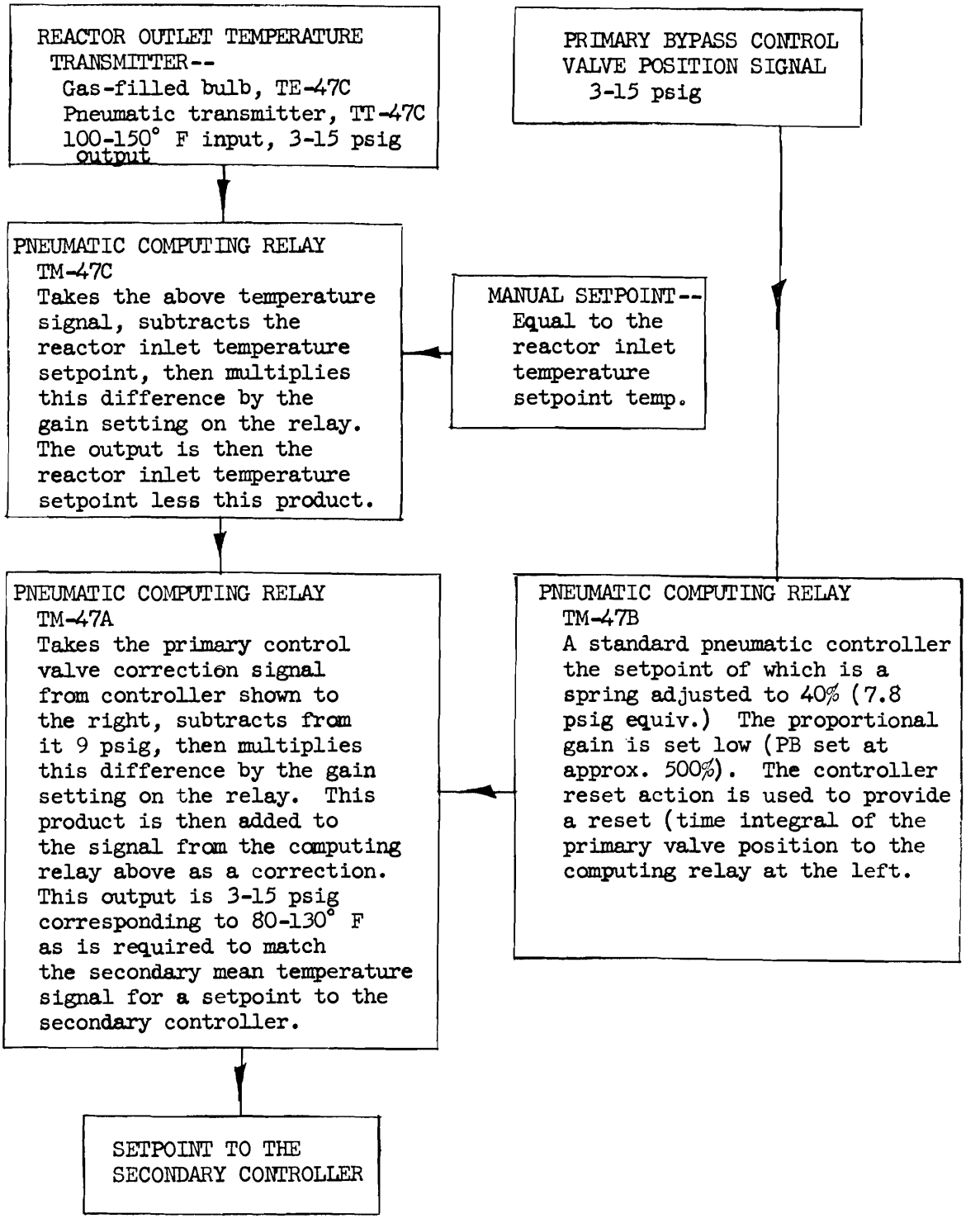

Fig. 5.11. Secondary Control System Setpoint Block Diagram

and produce an output signal, P, corresponding to the corrective action required by the secondary system. In accomplishing this, C is compared to two setpoints, A and B, and the computer output may be represented as:

$$P = B + \frac{1}{PB}(A-C)$$

Under normal operating conditions, both A and B are set for 117° to 120°F. The temperature of the inlet cooling water varies over this range, and at a reactor power level of zero the outlet corresponds to the inlet. Consequently, when the outlet cooling water is, for example, 120°F, or equal to the inlet temperature, the signal C is equal to A and the term $\frac{1}{PB}(A-C)$ is zero. The output of the computer, P, is then equal to B, which is the zero power temperature, and no change is called for from this source in the secondary cooling loop. If the reactor power rises, C increases, and the term $\frac{1}{PB}(A-C)$ assumes a negative value. The output P then drops below the setpoint temperature, B, and provides a signal to the secondary cooling system calling for more cooling capacity. If the reactor power drops, the reverse is true. P increases, and the secondary is asked to provide less cooling.

Conditions of Primary System

When a change in cooling water temperature occurs in the primary cooling system, the primary bypass valve responds immediately to provide a corresponding change in cooling capacity. Temperature fluctuations are sensed by temperature elements (TE11A) or (TE11B) and proportional signals are transmitted by TT11A and TT11B to the valve controller (TCV11). These signals, which determine the valve position, are also picked up by an isolator-booster (TM11B) and fed into the computer system.

The optimum operating condition for the primary valve has been determined as 45% open, which condition is produced by an 8-psi signal from TT11A or TT11B. Consequently, when an 8-psi signal is received the primary system is at equilibrium and no corrective action is necessary in the secondary. Equating this 8-psi signal to equilibrium conditions is accomplished by an eight-pound spring in the pneumatic computing relay TM47B. An 8-psi signal to the valve is received at "A" by TM47B and is exactly balanced by the eight-pound spring. As the primary valve opens and closes to meet fluctuations around the temperature setpoint, the output of TM47B will correspondingly swing positive and negative. The relay is adjusted to give a 9-psi output for equilibrium conditions. It may thus make a 6-psi swing in both the positive and negative directions in accordance with the 3 to 15-psi range of the instrument.

Still another pneumatic computing relay, TM47A, sums up the two conditions determining the secondary cooling loop setpoint. Since the signal from the primary bypass valve swings around 9 psi, a nine-pound spring is provided in TM47A to balance this offset and give a zero signal to the secondary from the primary valve when it is in its optimum condition.

5.4g. Primary Control System

As mentioned previously, the temperature of the cooling water in the primary control system is determined by a conventional temperature control system. At 30-Mw operation, TE11A senses the reactor inlet temperature at a point on the downstream side of the converging flows from the heat exchangers and the bypass line. The signal from TE11A is converted into a 3 to 15-psi output by TT11A which is fed through an isolator-booster

relay (TM11A) to a recorder (TR11) in the control room and to a controller (TC11) whose output actuates the primary bypass valve TCV11.

In the event that both the heat exchanger and the Trane system were used or the Trane system alone was put into service, it would be desirable to measure the cooling-water temperature downstream of the Trane, and the measurement would then be taken from TE11B. This element, with TT11B, is normally not employed during 30-Mw operation.

5.4h. Reactor Differential and Outlet Temperature System

Since cooling water temperature parallels the reactor power level and reflects temperatures within the core, measurements of the parameter are used to indicate the limits of safe operation for the reactor. Two types of temperature measurement, differential and outlet, are connected in the reactor safety system, giving alarm setback, reverse, or scram if either exceeds safe limits.

Cooling water enters the reactor tank through two parallel lines (north and south) from the bottom, is brought up and circulated down over the core, and then leaves the reactor through continuation of the north and south parallel lines at the bottom (Ref. Q-1594-28). Both inlet and outlet lines, consequently, are located in close proximity directly beneath the reactor core in the reactor's "Pipe Chase", and all differential and outlet temperature elements are conveniently located here.

Differential Temperature System

The difference between the temperature of cooling water entering the reactor and that leaving is a direct indication of the heat or power being produced in the reactor core. The general working formula for reactor

thermal power is:

$$Mw = 1.465 \times gpm \times \Delta T \times 10^{-4}$$

where Mw is reactor power in megawatts, gpm is cooling water flow in gallons per minute and Δ T is the temperature differential across the reactor in ^{o}F.

At normal 30 Mw operation, the temperature of water entering the reactor is in the neighborhood of 120°F and the corresponding temperature of water leaving would be 131.6^{o}F. This gives a temperature differential of 11.6^{o}F. If this differential rises above prescribed limits, it is an indication that a safe reactor power level is being exceeded. A Δ T reading greater than 13.0^{o} calls for an alarm, 13.5^{o} calls for a setback and reverse, and 15.5^{o} for a scram.

Since cooling water passes over the core from two parallel lines, it is likely that changes in core loading will cause one line to absorb more heat than others. For this reason, two sets of readings are used to determine Δ T, one from the north and one from the south leg. The average is used as an indication of the over-all ΔT parameter and gives the proper control action. Safety action is taken if either channel gives an abnormal indication. The two channels are labelled TdlA and TdlB. The arrangement of components in the TdlA series is outlined in the following paragraph. The arrangement is exactly duplicated in the TdlB channel.

Since water entering the reactor is at the same temperature in both legs, the inlet temperature elements (TdE1A1 and TdE1A2) for both Δ T measurements are located, for convenience of access, in the south leg. On the outlet side, TdE1A3 is in the south leg and TdE1A4 is in the north leg. All are thermohm or resistance-type temperature elements which change their

resistance value in direct proportion to their temperature. In a bridge-type connection, the sum of the voltage drops produced across the two inlet line resistors is subtracted from the sum of voltages produced across the two outlet line resistors. This difference is proportional to the average ΔT for the two cooling lines and is recorded by a Leeds and Northrup recorder (TdR1A) in the control room. Microswitches on the recorder give the alarm, setback, reverse, and scram actions at the proper levels.

Outlet Temperature System

If plate temperatures within the reactor core exceed 270°F, there is danger of boiling in the reactor. With allowance for a proper safety factor, it has been determined that the cooling water outlet temperature should be maintained below 135°F in order to maintain safe core temperatures. Outlet temperature is measured by two thermohm elements (TE43 and TE44) and recorded in the control room by Leeds and Northrup recorders TR43 and TR44. Operating temperature at 30 Mw is in the range 129° to 131.6°F. Microswitches in the recorders give an alarm at 134°, setback and reverse at 135°, and scram at 140°.

Thermocouples TE2A, TE2D, and TE2G supply readings of inlet and outlet water temperatures to a multipoint Brown recorder in the control room for readout purposes only.

5.5. Reactor Water, Other Controls

5.5a. Reactor Flow Measuring System

Flow in the ORR cooling loop is measured by a conventional flow measuring system and readings at normal operating conditions are used as the basis for manually operating three 6000-gpm pumps at the Main Pump House. Under shutdown conditions, a 1000-gpm shutdown pump is automatically started when flow drops below 1800 gpm and provides water for afterheat cooling. A 1000-gpm emergency gasoline motor driven pump is automatically started if shutdown flow drops below 1000 gpm and provides afterheat cooling water if there is a power failure. Thus, the flow measuring system may be thought of as being composed of two almost identical channels, one for measuring full operational flow in the range of 17,000 - 20,000 gpm and one for measuring shutdown flow in the range of 0 - 2000 gpm.

Full Flow System

A Foxboro 13A differential-pressure-cell (FT1A) measures the pressure drop across a Venturi meter located in the 24-inch return line under the porch of the Main Pump House and transmits a 3 to 15-psig signal proportional to flow. Range of the instrument is 0 - 250 inches of water. The signal is fed to a flow indicator, (F11A) in the Main Pump House and to a recorder (FR1A) in the control room. Switch FX1A1 is set to give an alarm and setback at a flow of less than 16,000 gpm, and two switches (FX1A3 and FX1A4) are set to de-energize at a flow of less than 14,000 gpm to give a scram.

Shutdown Flow System

A Foxboro 15A d/p cell (FT1B) measures the pressure drop across the same Venturi meter and transmits a 3 to 15-psig signal over approximately

a 0 to 2000-gpm range. Range of the instrument is 0 - 5 inches of water. When flow drops below 1500 gpm, switch FX-1B-3B starts the shutdown cooling pump. The pump maintains a flow of approximately 1200 gpm during shutdown. In the event of a power failure, the shutdown pump would become inoperative and the flow would start to decrease. When it dropped to 1000 gpm, switch FX-1B-3A would start the emergency gasoline motor driven pump. Flow must be increased to 4000 gpm to cut off the emergency pump in order to prevent on-off oscillation if shutdown flow fluctuates around the 1000-gpm level. In the event of failure of the emergency gasoline pump, flow would continue to drop. At the 600-gpm level, switch FX-1B-1 would actuate giving the "Lo Shutdown Coolant" alarm (FA1B) in the control room.

In addition to these two main systems, there are two other flow measuring systems in the primary cooling loop. A Foxboro 13A d/p cell (FE14 and FT14) detects the pressure drop across an orifice meter and transmits a 3 to 15-psig signal proportional to flow through the primary loop's two filters. The flow is read on indicators FI14A in the Main Pump House and FI14B in the control room. A Foxboro 3A d/p cell (FE2 and FT2) measures pressure differential across a flow elbow in the bypass line to the old Trane heat exchangers and transmits a 3 to 15-psig signal proportional to the flow through the bypass line. At 30 Mw operation, the Trane system is not used, and the manually operated bypass valve is kept closed. Thus there is no flow through the flow elbow. Flow indicators FI2A at the Main Pump House and FI2B in the control room receive the signal from FT2. No direct flow measurement has been provided for the bypass line of the new cooling system. A calculated value may be obtained through use of the

flow constant of the valve and pressure and flow parameters measured elsewhere in the cooling loop. A plotted valve flow as well as valve Δ p, heat exchanger flow, upstream pressure and total flow against valve opening has been calculated and is shown in Figure 5.12.

No direct flow measurement is provided for total flow under all conditions in the secondary side of the cooling loop as the parameter is not essential to reactor operation. Two orifice meters are located in the north and south inlet lines to the cooling tower. Two Foxboro 13 d/p cells measure drops across the two meters and transmit proportional 3 to 15-psig signals to flow indicators FI19A and FI19B in the Cooling Tower Pump House. For the condition when the secondary bypass valve is closed and total flow is routed over the cooling tower, the sum of the two meter readings gives total flow in the secondary. The two meter readings also make it possible to achieve the desired balance between flows in the two lines and are necessary also in evaluating the performance of the cooling tower.

5.5b. Cooling Tower pH Control System

In order to maintain a slightly basic pH level for chemical corrosion and algae inhibitors in the secondary loop cooling water, a system for automatic control of the secondary pH is included in the reactor control system. A Leeds and Northrup industrial element takes a 0.2-cfm sample from the pump discharge line. The sample is fed through a Leeds and Northrup pH flow block mounted on the west wall of the Cooling Tower Pump House. The sample is discharged into a floor drain. Electrical leads are run from the flow blocks to panelboard 2A in the Cooling Tower Pump House, and into a Leeds and Northrup indicator-modifier (AM7) which supplies an

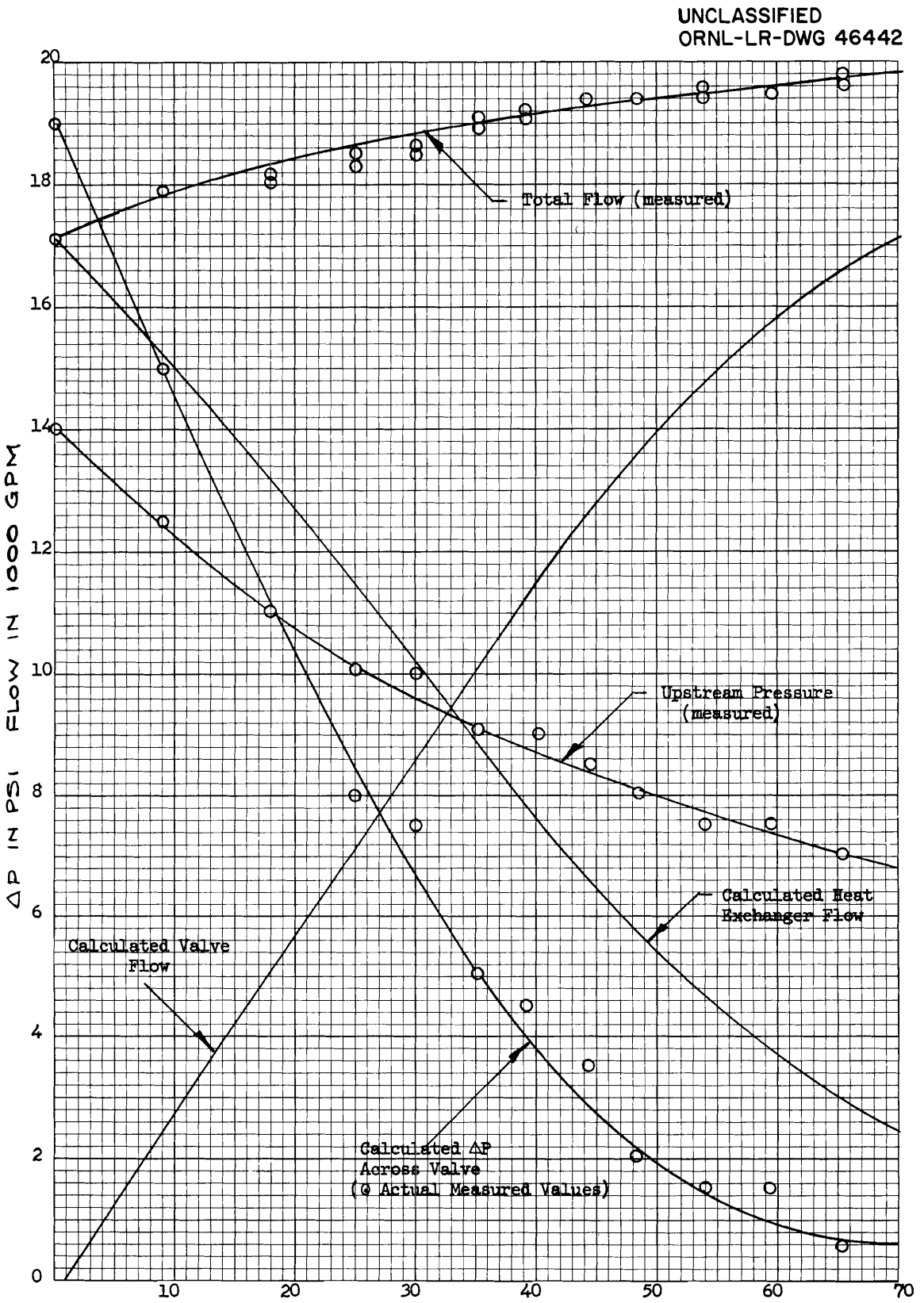

Fig. 5.12. Cooling Water Flow Curves

electrical signal to a control room recorder (AR7). Microswitches (AA7) in AR7 give an alarm if the pH drops below 6.75 or rises above 7.75. The operating range is maintained at 7.0 to 7.5.

The automatic system calls for a controller (AC7) to supply a signal to a pulser-feeder type pump with a variable stroke which will vary the flow of acid to the secondary system.

5.6. Reactor Pool Cooling

References

Drawings D-22318-R-2, D-22319-R-2, D-19425, D-15949, D-22320, D-22321-R-3. "Auxiliary Pumps for the ORR Process Water System," Sanders and Watts, ORNL 55-8-183

5.6a. Pool Water System

The heat that will be transferred to the pool surrounding the reactor tank, Figure 5.2, both by conduction through the tank wall and by gamma absorption, has been found to be $\sim$ 0.9 megawatts. The purpose of the primary loop, which has a flow rate of approximately 720 gpm based on a ΔT of 8.5°F, is to transfer this heat via a shell-tube heat exchanger to a secondary loop where the heat will be dissipated through an induced-draft cooling tower.

The water leaves the pool through a 6-in. line, No. 201, and passes through valve No. 201a and strainer No. 201b prior to entry into the pump. The pump, a 900-gpm unit, forces the water through check valve No. 202a where the flow may split, part of it passing through valve No. 202b, filter unit No. 202c, and valve No. 202d; the remaining portion may bypass the filter through line No. 234 which is regulated by valve No. 234a. At the point of convergence, line No. 202 carries the flow through valve No. 202e to the single-pass heat exchanger. Leaving the heat exchanger through line No. 203, the water passes through valve No. 203a and line No. 203 on its return to the reactor pool.

To establish normal flow through this loop, the following procedures should be followed:

1. Open valves:

   201a, at the inlet side of the strainer,

   202d, on the south side of the filter unit,

   202e and 203a, the inlet and outlet to the heat exchanger, respectively.

2. Close valves No. 234a and No. 292b, the valve in the filter unit bypass and the valve north of the filter unit, respectively.
3. Start the pump and open valve No. 202b.
4. Adjust the rate of flow to the desired amount by opening and adjusting valve No. 234a.

With the filter unit out of service and valve No. 234a fully open, a flow of 700 gpm will be attained. With the filter clean and valve No. 234a fully open, 750 gpm will flow in the loop. Normally, the flow will be adjusted to permit approximately 150 gpm through the filter, with a total flow of approximately 720 gpm.

There are gutters, located along the top of both the north and south pool walls, into which water is always overflowing from the pool. From the gutters it goes to a 400-gallon reservoir tank near the basement ceiling at the west end. Water flows from this tank to the suction leg of a 100-gpm pump, located on the floor, which provides water to the pool demineralizer. After leaving the demineralizer, the water returns to any or all of the pools. The level in the reservoir tank is automatically controlled, admitting water from Building 3004 when the level falls in the tank.

It has been previously stated that the reactor tank could not be drained down to the level of the lattice. Likewise, the reactor pool has

no inlet or outlet located below the level of the top of the lattice. Consequently, it cannot be drained below that level. However, both of the other pools have inlets and outlets in their floors. Thus, if the gate separating the reactor pool from the other pools is not in place, the reactor pool can be drained to within three feet of the bottom.

5.6b. The Pool Demineralizers

The radioactivity in the ORR pool water would build up to an appreciable level if a method were not provided to remove the radioactive ions. The neutron flux in the pool just outside the reactor tank wall is of the order of 10^{13} n/cm^2/sec, and produces radioactive Na^{24}, N^{16}, and other unstable nuclides; so, a pool bypass demineralizer is used to remove a portion of these nuclides.

In the present operation of the demineralizer, water overflow from the pool is collected in a 400-gal. overflow reservoir which serves as the supply for the pump in the demineralizer system. The pump passes the water through both a cation resin bed and an anion resin bed; then, returns it to the pool. The cation unit, 48 in. in diameter and 72 in. high, contains 40 cubic feet of IR-120 cation resin. The anion unit, 48-in. in diameter and 72 in. high, contains 35 cubic feet of IRA-401 anion resin. The system, utilizing both the cation and anion columns at all times, has a flow rate of 100 gpm with the discharge of the system re-entering the pool through the fill lines.

1. Normal flow pattern:

    a. From the overflow tank, through line No. 213 to the pump, through line No. 214, and through a number of valves, the

flow is routed to the top of the cation column. Valves which affect the path of flow and their position for normal flow are as follows:

213a, open (Line 213 overflow to pump)

214b, open completely

214c, open to obtain desired flow

Inlet sampling line, closed

214d, open completely

214f, open completely

422b, closed, a process water supply line

514a, closed, routes flow to bottom of unit

214g, open, routes flow to top of unit

517a, closed, routes flow to drain

427a, closed, a demineralized water supply line

532a, open, vent to off-gas

532b, open, vent to off-gas

532c, open, vent to off-gas

415a, closed, acid addition line

415b, 3-way valve locked

415c, closed, acid addition line

b. From the cation unit to the top of the anion unit, line No. 215 carries the flow. The valves which affect the route and their position for normal flow are as follows:

518a, closed, to drain

215a, open

Both cation sampling valves, closed

428a, closed, demineralized water supply

515a, closed, routes flow to bottom of unit

215b, open

520a, closed, to drain

414b, closed, demineralized water supply

533a, open, vent to off-gas

533b, open, vent to off-gas

533c, open, vent to off-gas

416a, closed, caustic addition

416b, 3-way valve in locked position

416c, closed, caustic addition

c. From the anion column, the flow returns to the pools via lines No. 216 and No. 205. The flow through the demineralizers is controlled by an air control valve in No. 216, which in turn is controlled by the resistance of the water. The valving arrangement is as follows:

521a, closed, to drain

Sampling valve, closed

ACV-3B, open, actuated by Solu-bridge probe

215b, open

208a, east pool, open if desired

205c, center pool, open if desired

207a, west pool, open if desired

Valve No. 214c is used to adjust the flow to approximately 70 gpm. If the level falls too low in the 400-gal tank, a level control valve opens in line No. 447, admitting make-up water to the system. If the level in the 400-gal reservoir

should rise too high, the overflow goes through line No. 501 to the retention ponds.

2. Through-Flow of Pool Demineralizer:

For special usage, a "Thru-flow" circuit of the demineralizers is necessary whereby water from other sources can be passed through the demineralizers for purification. In this special flow circuit, the demineralizer pump and reservoir tank are isolated and the "fill-drain" pump is used as a source of water movement.

To establish a "thru-flow" circuit in the pool demineralizers from sources outside of the normal demineralizer flow path, the following procedures are used:

a. The following valves should be closed:

All sampling valves

422b, plant process water

514a, a bypass of the cation unit

427a, demineralizer water

532a, vent to off-gas

517a, bypass to drain

518a, cation unit to drain

428a, demineralized water

515a, bypass anion unit

520a, bypass to drain

414b, demineralized water

533a, vent to off-gas

416a, caustic addition

521a, anion unit to drain line

415a, acid addition

b. The following valves should be open:

214c, control valve

214d, inlet to filter

214f, exit of filter

214g

215a

215b

ACV-3B, discharge line of anion unit

3. Recirculating the Reactor Pool Through the Pool Demineralizer

In the event of gross contamination in the reactor pool, it may be desirable to recirculate the reactor pool water through the pool demineralizer for major clean-up work. This operation can be performed by using lines of the primary cooling loop as the inlet and exit of the reactor pool. The procedures for this operation are as follows:

a. The regular demineralizer pump will not be used and should be isolated by closing valve No. 214b.

b. Valves No. 205c and No. 207a, located on the fill lines to the center and west pools, should be closed.

c. The following valves, normally closed, should be checked to make sure they are closed:

502a, drain to retention ponds, located in the north bank

228a, near suction of fill-drain pump

217a, in the north bank of valves

204b, on line 204-4 in. to storage tanks

227b, in this arrangement, it will be the throttling valve

219b, on line 219-4 in. in south bank of valves

204b, on the line discharge side of the south bank of valves

205c, on the line fill leg of the center pool

207a, on the line fill leg of the west pool

143a, on the line to the reactor system

204a, drain line of the center pool

206a, drain line of the west pool

d. Make the valving arrangement, as in (2) above, for "thru-flow" demineralizer flow except to keep the pump isolated.

e. The following valves should be <u>opened</u>:

209a, in the north bank of valves

218a, in the suction leg of the fill-drain pump

216c, in the north bank of valves

208a, in the south bank of valves

f. Start the fill-drain pump and adjust the flow (not greater than 100-gpm) with valve No. 227b on line No. 214.

g. Upon completion, restore all valves to their normal positions.

4. Recirculating the Center Pool Water Through the Pool Demineralizer: To ready the flow circuit for recirculating the center-pool water through the pool demineralizer, the following valve changes are necessary:

a. Stop the main demineralizer pump and isolate it from the demineralizers by closing valve No. 214b located on the discharge side of the demineralizer pump.

b. Arrange the demineralizer for "thru-flow" as outlined in (2) above.

c. Close the following valves:

209a, on line No. 209-4 in. connecting line No. 201 to line No. 204. The valve No. 209a is in the north bank of valves.

502a, on line No. 502-4 in. in the north bank of valves

228a, on line No. 228-3 in. in the north bank of valves

204b, on line No. 204-4 in. in the north bank of valves

205b, on line No. 205-4in. in the south bank of valves

217a, on line No. 217-4in. in the north bank of valves

208a, on line No. 208-4 in. in the south bank of valves

143b, on line No. 143-4 in. in the south bank of valves

219b, on line No. 219-4 in. in the south bank of valves

206a, on No. 206-2 in. drain line from the west pool

207a, on line No. 207-4 in. in the south bank of valves, and is the fill line to the west pool

d. The following valves should be open:

204a, on line No. 204-2 in. in the north bank of valves

218a, on line No. 218-4 in. which is the suction leg of the fill-drain pump

227b, on line No. 227-3 in. inlet to the demineralizer in the north bank of valves. This valve is to be used for throttling the flow

216e, on line No. 205-4 in. in the south bank of valves

e. The fill-drain pump should be started against a closed valve, No. 227b. This valve is then opened to obtain the desired flow of not greater than 100 gpm.

f. Flow is indicated by FE-7.

5. Recirculating Water from the West Pool Through the Demineralizer

Any time the pool radiation is above normal or the water becomes bad, the following method is used for cleaning and decontaminating the water.

a. Close the following valves:

204a, on the 2-in. IPS drain line from the center pool

205c, on the 4-in. IPS fill line to the center pool

209a, on the 4-in. IPS drain line from the reactor pool

208a, on the fill line to the reactor pool

218b, on the 4-in. IPS line from the storage tanks to the drain-fill pump

143a, on the 4-in. IPS line from the main pool fill line to the 24-in. inlet line to the reactor.

205b, on the 4-in. IPS line from the discharge side of the drain-fill pump

217a, on the 4-in. IPS line from the discharge side of the drain-fill pump to the main drain line

502a, on the 4-in. IPS line to the retention ponds

228a, on the 3-in. IPS line from the demineralizer

214b, on the discharge line from the demineralizer pump. Since the drain-fill pump is being used, this will isolate the demineralizer pump.

b. Open valve No. 218a on the 4-in. IPS line from the main drain line to the drain-fill pump.

c. Close valve No. 204b on the main drain line.

d. Open: 206a on the 2-in. IPS drain line from the west pool
207a on the inlet line to the west pool
216b on the 3-in. IPS line from the demineralizer to the main fill line

e. Start the drain-fill pump and control the flow at 100 gpm with valve No. 227b on the 3-in. IPS line to the demineralizers.

5.6c. Regeneration Procedures

The units are regenerated in place utilizing facilites which are located in the basement of Building 3042 and in Building 3004. As in the case of the other demineralizers used by operations personnel, all regenerants are mixed in Building 3004 and pumped to the ORR basement via permanent piping which connects the two areas. Since the pool demineralizer system consists of only one complete unit, at times it is necessary to operate the reactor without the pool demineralizer system in operation; when one or both of the resin columns are undergoing regeneration.

The techniques used in the regeneration of units of this system are typical of any single unit bed. The particular procedures applicable to these resin columns follow.

Cation Resin Column Regeneration

The cation resin column is regenerated whenever it becomes unable to sufficiently remove radioactive ions from the pool water system. Samples of this water are taken and counted daily to determine when this breakdown occurs.

A stepwise regeneration method is detailed in the following procedure.

1. Remove the demineralizer from service by closing the following valves:

213A	ACV-2B2,	closed by shutting valve in air supply to diaphragm of pilot valve
214B	216B	
214C	208A	
214D	205C	
214F	207A	
214G	532B	
215A	533B	
215B	STOP PUMP	

2. Take the integrator readings and record them in the ORR log book.
3. Remove the spool pieces to insure positive isolation of the demineralizer from the pool water system. The spool pieces are located on each side of the demineralizer and are identified by a red stripe.
4. Take a sample of the resin before and after regenerating the column. Send the samples to the lab for a check on the efficiency of the regeneration. Sampling the resin is accomplished by pressurizing the column with process water and forcing the resin out of the sampling line. To do this:

   Close valves:

517A	215A
214F	532B
214G	518A

Open valves:

422B

514A

The column is now pressurized.

Open the valve on the sampling line coming from the top of the cation column. Run enough resin out to empty the line of stagnant resin, then take the sample. After the sample has been taken, close all valves associated with this operation.

5. Backwashing and Fluffing the Cation Resin

The purpose of the backwash operation is to rid the resin bed of foreign matter and to fluff the resin prior to sending the regenerant solution through the column. Process water, used in this phase, enters the bottom of the column in an up-flow direction. The effluent from the top of the column must be sent to the hot drain.

Check with the tank farm operator and obtain permission to send the backwash water, regenerant solution, and the first portion of the rinse water, to the hot drain tank, WC-19. This will be a total of approximately 1200 gallons of liquid. Make sure that none of this liquid gets into the warm drain as it will both damage and contaminate the basement sump and the sump pump.

Observe the backwash flow rate (10 gpm) closely. Since the water is not visible, the operator is not aware that the resin is being lost if too high a flow rate is employed.

Backwashing of the cation column requires the following valve arrangement in the basement of Building 3042.

Close valves:

508A	215A
214F	518A
214G	532B

Open valves:

442B

514A

509A

Open valve 517A until a flow of 10 gpm is indicated on the process water flow meter FE-6.

The backwashing should continue for 40 minutes to provide proper cleaning, then all valves associated with this operation should be closed.

6. Sending the acid regenerant solution through the cation column: Two operators are required for this phase of the regeneration; one at the basement of Building 3042 and one at Building 3004. They will contact each other by phone.

The operator in the basement of Building 3042 will make the following valve arrangement:

Close valves:

508A	214F
532B	514A
517A	215A
214G	

At this time, all of the 3-way valves on all of the other demineralizer columns should be checked to make sure they are closed and locked.

Open valves

415A	518A
415B	509A
415C	

The operator in the basement of Building 3042 will now inform the operator in Building 3004 that the column is prepared to receive the regenerant solution.

The operator in Building 3004 will proceed as follows:

Jet the nitric acid into the overhead tank using the following procedure:

a. Open the 1 1/2-in. vent valve, No. 5, on the 1 1/2-in. vent line coming from the acid storage tank. (It is very important that this valve be open because if it were closed and the jet left on accidentally, the acid storage tank would collapse when all the acid had been jetted out.

b. Close the small 1/4-in. vent valve, No. 7, on the vent line coming from the overhead acid tank.

c. Close valve No. 6. This valve is located on the acid line over the drain just outside of the north door of Building 3004. This valve should stay closed all the time except when acid is jetted from carboys instead of the acid storage tank.

d. Open acid valve No. 10. This valve, on the acid line entering the overhead acid tank about 2 feet from the tank, can be left open at all times.

e. Open the acid valve No. 8. This valve is on the outlet acid line from the acid storage tank and is located about midway up the line in front of the acid storage tank.

f. Open the air jet valve and permit acid to be jetted from the acid storage tank into the overhead acid tank until the level of the acid in the overhead acid tank reaches the 3rd marker on the sight glass. The sight glass is on the west end of of the overhead acid tank. The markers on the sight glass are adjusted as follows - Lower marker = 1 carboy, 2nd marker = 2 carboys, 3rd marker = 3 carboys, and the upper marker = 4 carboys.

When acid reaches the 3rd marker, immediately close the air jet valve, close valve No. 8 on the acid storage tank, and open the small vent valve. The reason for stopping the acid on the 3rd marker is that in the time that it takes to close the air jet valve, the No. 8 valve on acid storage tank, and to open the small vent valve No. 7, another carboy of acid is syphoned from the acid storage tank to the overhead acid tank. The acid level in the overhead acid tank must be on the upper marker on the sight glass.

Never run the overhead acid tank over; the acid will overflow through the vacuum line, through the air jet, and out on the ground on the outside of Building 3004.

Open the valve marked "acid regenerant solution to ORR".

Open Valve No. 4, discharge of pump, located on top of pump.

Open the valve that sends cooling water to the pump bearings.

Start the pump.

Open valve No. 5, the process water valve, and adjust it to read 10 gpm on the flow meter.

Water will now be flowing to the cation column in the basement of Building 3042.

Before opening the acid valves, notify the operator in the basement of Building 3042 to check for leaks. If there are no leaks, the operator in Building 3004 can start mixing the acid with the process water.

Open the valve marked "acid to No. 2 unit".

Open valve No. 6.

Open valve No. 6A and adjust it until a spg. of 1.03 to 1.06 is obtained at the sampling valve.

When acid is added to the process water, an increase of 1/2 to 3/4 gpm will be noticed on the flow meter.

After the tank of acid has been sent through the cation column:

Close valve No. 6A

Close valve No. 6

Close the valve marked "acid to No. 2 unit".

The process water should continue to flow for 5 minutes to thoroughly flush the lines.

After completing this phase, close all valves in Building 3004 and in the basement of Building 3042 that were used in this operation.

7. Rinsing the Cation Column

The column is rinsed with demineralized water from Building 3004 until all of the excess acid is removed. This will require approximately 4,000 gallons. The demineralized water storage tank level in Building 3004 should be checked to make sure that this amount of water is available.

The first portion of the rinse water (about 400 gal.) should be sent to the hot drain. It contains enough acid and activity to both damage and contaminate the basement warm drain sump and sump pump.

To rinse the cation column, make the following valve arrangement in the basement of Building 3042.

Close valves:

508A	532B
214G	215A
517A	514A

Open valves:

509A

427A

Open valve 518A until a flow of 10 gpm is indicated on the demineralized water flow meter FE-5.

Permit the water to flow in this manner for 45 minutes, after which it may be changed from the hot drain to the building warm drain as follows:

Open valve 508A

Close valve 509A

This will permit the remaining portion of the cation column rinse water to flow to the warm drain. At this time, the rinse flow may be increased to 30 gpm.

The rinsing cycle will be considered complete when the pH in the rinse water levels out. At this time, all valves associated with this phase should be closed. The total time for the rinse cycle is approximately 2 hours and 15 minutes.

8. Take an "after regeneration" resin sample using the method outlined in Step 4.
9. If the anion column is serviceable, replace the spool pieces, and put the demineralizer back into service.

Anion Resin Column Regeneration

The anion resin column is regenerated following its inability to sufficiently remove the radioactive ions from the pool water system. Samples of this water are taken and counted daily to determine when this breakdown occurs.

A step-wise regeneration method is detailed in the following procedure.

1. Remove the demineralizer from service. This is accomplished by closing the following valves:

213A	ACV-2B2
214B	216B
214C	208A
214D	205C
214F	207A
214G	532B
215A	533B
215B	STOP PUMP

2. Take integrator readings and record them in the ORR log book.
3. Remove the spool pieces to insure positive isolation of the demineralizer from the pool water system. The spool pieces are located on each side of the demineralizer and are identified by a red stripe.
4. Take a sample of the resin before and after regenerating the column. Send these samples to the lab to check the efficiency of the regeneration. Sampling the resin is accomplished by pressurizing the column with process water and forcing the resin out of the sampling line. To do this:

   Close valves:

520A	533B
414B	521A

   Open valves:

422B	215A
514A	515A

The column is now pressurized.

Open the valve on the sampling line coming from the top of the anion column. Run enough resin out to empty the line of stagnant resin, then take the sample. After the sample has been taken, close all valves associated with this operation.

5. Backwashing and Fluffing the Anion Resin

The purpose of the backwash operation is to rid the resin bed of foreign matter and to fluff the resin prior to sending the regenerant solution through the column. Process water, used in this phase, enters the bottom of the column in an up-flow direction. The effluent discharges from the top of the column and is sent to the hot drain.

Check with the tank farm operator and obtain permission to send the backwash water, regenerant solution, and the first portion of the rinse water, to the hot drain tank, WC-19. This will be a total of approximately 1200 gallons of liquid. Make sure that none of this liquid gets into the warm drain, as it will both damage and contaminate the basement sump and sump pump.

Observe the backwash flow rate (10 gpm) closely. Since the water is not visible, the operator is not aware of the resin being lost if too high a backwash flow rate is employed.

Backwashing of the anion column requires the following valve arrangement in the basement of Building 3042.

Make sure that the following valves are closed:

533B	428A
414B	518A
215B	214G
521A	532B
508A	

Open valves:

422B	515A
514A	520A
215A	509A

Open valve 520A until a flow of 10 gpm is indicated on the process water flow meter, FE-6.

The backwashing should continue for 40 minutes to provide proper cleaning, after which all valves associated with this operation should be closed.

6. Sending the caustic regenerant solution through the anion column. Two operators are required for this phase of the regeneration, one at the basement of Building 3042 and one at Building 3004. They will contact each other by phone.

The operator in the basement of Building 3042 will ascertain that the following valves are closed:

508A	215A
533B	215B
520A	515A

At this time, all 3-way valves on all other demineralizer columns

should be checked to make sure they are closed and locked.

Open valves:

416A	521A
416B	509A
416C	

The operator in the basement of Building 3042 will now inform the operator in Building 3004 that the column is prepared to receive the regenerant solution.

The operator in Building 3004 will proceed as follows:
Mix a tank of caustic regenerant solution using the method now employed in regenerating a Building 3004 anion column. The spg. should be 1.05, the temperature 95°F or 35°C.

Open valves:

T

Y

"to ORR"

Start the pump and open valve "V" until a flow of 10 gpm is obtained. Continue at this flow until the level in the mix tank reaches 3 inches.

Stop the pump and close the valves in Building 3004. Refill the tank and repeat the same operation. The anion column needs two full mix tanks of caustic solution for a thorough regeneration.

When the level of the second tank reaches 3 inches, stop the pump and close the valves. Drain the remainder of the solution to the sump. Fill the mix tank to 6 inches with fresh water, open the

valves, and start the pump. This is to rid the lines of caustic solution.

After completing this phase of the regeneration, close all valves in Building 3004 and in the basement of Building 3042 that were associated with this phase.

7. Rinsing the Anion Column

The column is rinsed with demineralized water from Building 3004, until all of the excess caustic is removed. This will require approximately 4,000 gallons. The demineralized water storage tank level in Building 3004 should be checked to make sure that this amount of water is available.

The first portion of the rinse water (about 400 gal.) should be sent to the hot drain because it contains enough caustic and activity to do damage to and contaminate the basement warm drain sump and sump pump.

To rinse the anion column, make sure that the following valves are closed:

508A	533B
215B	515A
520A	

Open valves:

509A

414B

Open valve 521A until a flow of 10 gpm is indicated on the demineralized water flow meter, FE-5.

Permit the water to flow in this manner for 45 minutes. Then change it from the hot drain to the building warm drain by the following valve changes:

Open valve 508A

Close valve 509A

This will permit the remaining portion of the anion column rinse water to be sent to the warm drain. At this time, the rinse flow may be increased to 30 gpm.

The rinsing cycle will be considered complete when the pH of the rinse water levels out. At this time, all valves associated with this phase should be closed. The total time for the rinse cycle is approximately 2 hours and 15 minutes.

8. Take an "after regeneration" resin sample using the method outlined in step No. 4.

9. If the cation column is serviceable, replace the spool pieces and put the demineralizer back into service.

   Since there is only one pool demineralizer system, it is expected that it will be returned to service as soon as regeneration is completed. If such is not the case, say for regeneration during an extended shutdown, proceed to step No. 10.

10. When the unit has been out of service for a prolonged period, most of the water contained in it is of low purity. Before putting such a unit on the line, it should be rinsed with demineralized water to avoid putting low purity water into the pool. Rinsing of the system is accomplished by rinsing the cation column with

demineralized water to the warm drain, and then placing the units in series and rinsing both cation and anion columns to warm drain. Note that this procedure is different from a rinsing after regeneration, in that the use of the hot drain is not necessary.

To rinse the cation column:

a. Open valve 508A, warm drain

b. Open valve 427A, demineralized water supply

c. Open valve 518A, exit from cation column

All other valves will be closed. Rinse the cation column at 30 gpm, on flow meter FE-5, for 15 minutes to warm drain, regulating flow with valve 427A.

Then valve the cation column in series with the anion column by making the following valve changes:

Close valve 518A, exit from cation column

Open valves 215A, crossover from cation to anion column
215B, crossover from cation to anion column
521A, exit from anion

Rinse at 30 gpm until the exit water is equal to or better than the inlet water. Close the above valves and place the unit in service.

An override button is located on the pump switch box to override automatic shutdown during short term surges of bad water, and <u>must not</u> be used in the place of rinsing down the columns.

5.6d. Other Sources of Demineralized Water

Building 3004 Demineralizer Water

A continuous supply of demineralized water is necessary to: (1) provide makeup water to the overflow tank while the pool demineralizer is in service, (2) supply the shim rod and fission chamber drive seals and the bottom plug seal in the subpile room, and (3) service those reactor experiments for which an uninterrupted supply of demineralized water is required. If an interruption becomes necessary due to an emergency, contact all experiment personnel involved.

1. Pool Make-Up

   When water is lost from the pool system, the overflow to the side gutters, which feed the reservoir tank, is reduced. Since the pool demineralizer pump is taking its suction from this tank, the level in the tank falls. Make-up is then supplied by level control valve LCV-48, which supplies demineralized water directly from Building 3004. Shut-off valves No. 447a and No. 447b, on either side of LCV-48, should be fully closed. Without this make-up supply, if sufficient water were lost from the pool system, through evaporation or other causes, the demineralizer pump could lose suction and be damaged.

2. Bottom-Plug Seals

   Valves and piping located in the subpile room route demineralized water from Building 3004 to a system of seals which prevent the radioactive water of the reactor cooling system from leaking past the bottom plug, shim-rod drives, and fission chamber drive into the subpile room. The function of the water supply to the drive seals in the subpile room, Figure 5.13 is defined as follows:

ORNL-LR-DWG. 51017
UNCLASSIFIED

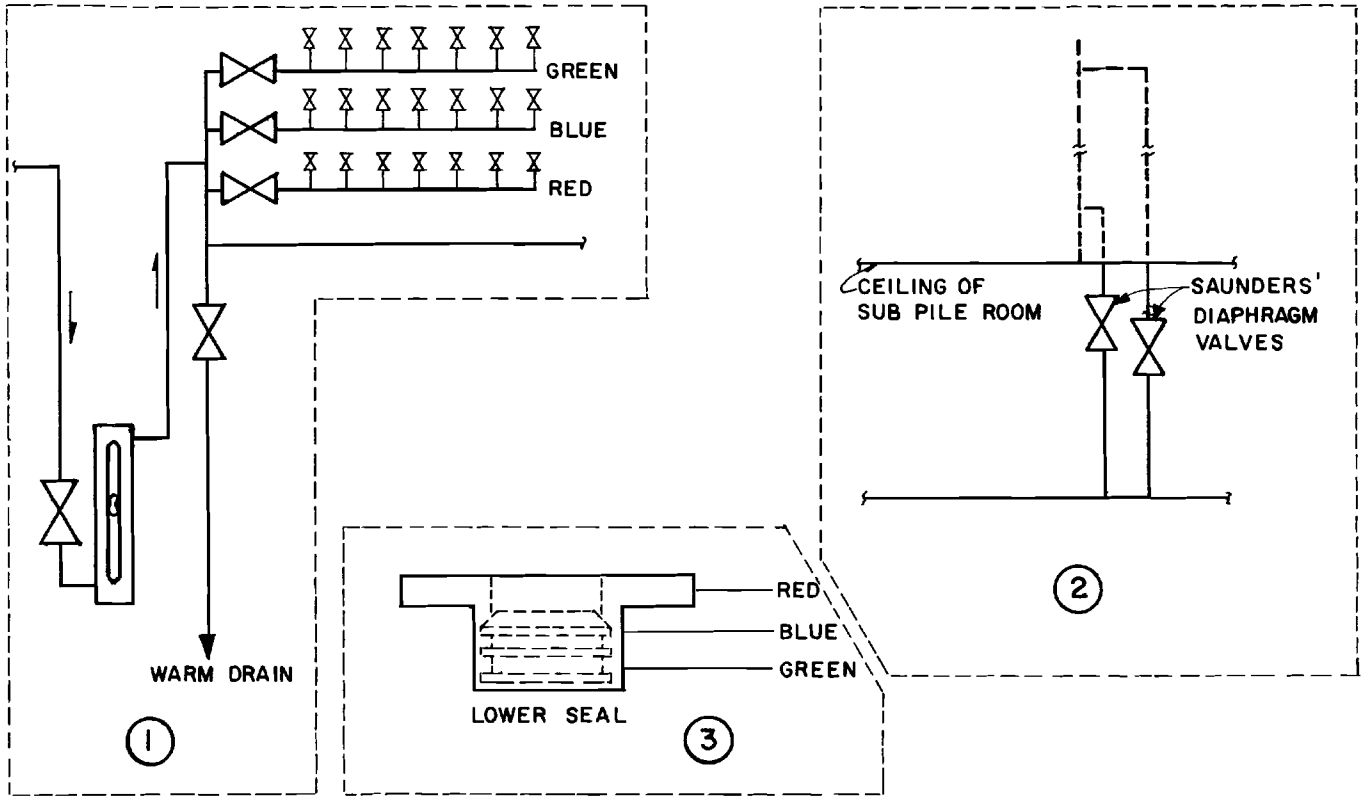

NOTES:

1. EQUIPMENT INCLUDED IS ALL MOUNTED ON THE SOUTH WALL INSIDE THE SUB PILE ROOM.
2. EQUIPMENT INCLUDED IS LOCATED NEAR CEILING OF SUB PILE ROOM.
3. TYPICAL CONNECTION TO LOWER SEAL FROM MANIFOLD INDICATED IN 1. TYPICAL ON ALL SHIM ROD DRIVES.

Fig. 5.13. Water Supply to Drive Seals in Sub Pile Room

a. The red line discharges into the flange of the shock absorber. Originally, it was intended to serve as an outlet for washing out settlings from the shock absorber. Currently, it is used to provide a slight upward flow through the shock absorber to prevent water stagnation.

b. The green line discharges between the "O" ring seals and serves to pressurize the area to prevent radioactive water from leaking past the seals into the subpile room.

To establish flow to the seals, the following checks should be made in the subpile room:

a. Be certain that the valve on the "warm" drain line, south wall, is closed.

b. Open all needle valves located on the ceiling south of the shim-rod drives.

c. Open the three valves on the manifolds which supply the needle valves. These are also located on the south wall.

d. On the ceiling north of the shim-rod drives, there is an aluminum water line which divides into two separate lines, each equipped with a diaphragm-type valve. Be certain that one valve is closed and the other is open.

e. Establish flow using the valve located next to the Flowrater on the south wall. Set the flow between 35 and 50 on the Flowrater. If flow is not established when this valve is opened, check the valve on the supply line where it connects to the line from Building 3004. If it is open, check the control valve in Building 3004. If this valve is closed, do <u>not</u> open it without supervisory authorization.

Demineralized water usage at the ORR building varies from time to time, depending on many operations. It is important, however, that the supply of demineralized water to the ORR be continuous to provide cooling water for experiments.

The importance of a continuous flow of demineralized water to the ORR should be brought to the attention of all personnel associated with the demineralized water plant. The mode of operation to the ORR should be as follows:

a. For normal operation, water to the ORR will be valved to permit flow from the Building 3004 storage tank. This will permit a continuous flow, regardless of the status of the units.

b. For abnormal conditions requiring large quantities of water, the valve may be opened to send water to the ORR, directly from a unit(s); however, the line from the Building 3004 storage tank should remain open at all times. The valves on this line are identified accordingly.

c. If it becomes necessary due to an emergency, to interrupt flow to the ORR, contact all experimental personnel involved. Presently, the main users are HN-1 and GCR.

Demineralizing Process Water for Use in the Cooling System

By passing process water through the pool demineralizer, another source of demineralized water is made available to fill the various parts of the two water systems. This can be used instead of, or in conjunction with, the normal demineralized supply from Building 3004. To do so:

1. Stop the demineralizer pump and close valve No. 214c. This stops the normal operation of the pool demineralizer.
2. Close valves No. 228a and 216c.
3. Open valve No. 422b. This pressurizes the demineralizer system with process water.
4. Open valves No. 216c and No. 143a to route the demineralized water to the reactor system.
5. Open valves No. 216c and No. 208a to route the demineralized water to the reactor pool.
6. Open valves No. 216c and No. 205c to route the demineralized water to the center pool.
7. Open valves No. 216c and No. 207a to route the demineralized water to the west pool.
8. Open valves No. 228a, No. 204b, No. 204d, and No. 223a to route the demineralized water to the storage tanks.

Storage Tank Transfer Via Pool Demineralizer

When high quality water is stored for an excessively long time, it loses its quality through various mechanisms. When necessary, water stored in one of the storage tanks may be transferred to the other tank, by way of the pool demineralizer, to clean it.

We will assume that water is to be moved from the east tank to the west tank.

1. Open valves No. 220a and No. 223a at the storage tanks.
2. Close valves No. 219a and No. 204d at the storage tanks.
3. Open valves No. 219b, No. 228a, and No. 204b in the basement of Building 3042.

4. Close valves No. 218a, 205b, 217a, 214b, 216c, 204a, and 206a in the basement of 3042.

5. Open valves No. 214c, 214d, 214f, 214g, and 215g in the pool demineralizer circuit.

6. Start the fill and drain pump.

7. Open valve No. 227b on the exhaust side of the fill and drain pump.

Caution: Do not let the tank run dry or the pump will cavitate.

Note: To reverse this procedure, close No. 220a and No. 223a and open No. 219a and No. 204d.

5.6e. The Secondary Loop

As has been explained, several megawatts of heat are removed from the pool water in the shell-and-tube heat exchanger. This heat is transferred to process water which flows through the shell. The process water from the heat exchanger flows through a 6-in. line to a wooden spray tower west of the pump house. The water is pumped out of the spray tower sump and back to the shell side of the heat exchanger. The volume of water in the piping of the loop is 2,410 gallons with the cooling tower basin and sump bringing the total capacity to 5,270 gallons. The control of the pool secondary will be described in Section 5.6f.

The Secondary Cooling System

Heat absorbed by the pool water by conduction and radiation heating is transferred to a secondary water system in an aluminum heat exchanger. The secondary water flows from the heat exchanger to a redwood cooling tower where it is cooled and pumped back to the heat exchanger at a rate determined by the control system. Plant process water is used in the system with a makeup to provide for evaporation and drift from the tower.

To protect against corrosion and scale formation, particularly in the aluminum heat exchanger, and to eliminate microbiological growths in the cooling tower, water treatments recommended specifically for this system are used.

1. Prevention of Corrosion and Scale Formation

   Nalco No. 360 fed at the rate of 10 ppm, based on the makeup, requires the feeding 1.5 pounds of this material daily.

   This is fed continuously through the Nalco No. 00-200 Ball Feeder which is located at the cooling tower sump on a bypass leg of the circulating pump. The No. 360 balls are stored in the No. 2 pump cell at the pump house. The chromate content should be maintained between 15-20 ppm. This content should be checked once per shift using the Nalco chromate test kit.

2. pH Control

   It is of utmost importance that the pH be controlled between 7.0 and 7.5. This is accomplished by slowly adding a dilute mixture of H_2SO_4, as required, from the tank at the site of the tower. To refill the tank, add process water to within one gallon of the top of the tank and then add one 9-pound bottle of Technical Grade H_2SO_4 which is stored in the No. 2 pump cell.

3. Microbiological Growth

   Feed five pounds (0.65 gal.) of Nalco No. 321 liquid into the sump at the rate of 100 ppm once weekly. This amounts to feeding the above quantity into the sump over a period of 30 to 45 minutes. No tests are required and this treatment should prevent microbiological growth in the redwood.

4. Algae Formation

Once every three weeks suspend ~15 pounds (fourteen Nalco 21-S balls equal 15 pounds) of Nalco No. 21-S balls in the cooling tower sump and let them dissolve. This will also supplement the operation described in Step No. 3. No tests are required and this should prevent algae formation.

5. Total Solids

A concentration ratio (Total Solids) of 5.0 to 1 should never be exceeded. Purging the basin, using the installed one-inch line and valve, will help keep this ratio within limits. A sample of make-up water and system water should be taken and sent to the Analytical Laboratory for a Total Solids count. The one-inch line and valve which connects the tower basin to the drain should have a continuous flow of ~5 gpm. This is a syphoning action, and flow will need to be established each time after the tower has been started up. Also, if the tower is shut down for a period of time exceeding one hour, the flow should be stopped by closing the valve.

Draining Secondary Cooling Loop

On occasion, it may be desirable to dump the contents of this loop. Since this water is non-radioactive, its drain, a 4-in. vitrified clay pipe, is connected to the 18-in. concrete pipe just north of Building 3012 (Rolling Mill).

The procedure for dumping is as follows:

1. Stop the circulating pump.
2. Close valve No. 446a, the supply line to the float-controlled valve.

3. Open valve No. 530a, located on the drain line.
4. Open valve No. 529a. This will open the inlet line of the heat exchanger to the sump.
5. Open valve No. 528a which will open the exit line of the heat exchanger and the inlet line from the cooling tower to the sump. This will drain the entire system.

Filling the Secondary Cooling Loop

The secondary system is filled with plant process water. By opening valves No. 404a and 446a, water is admitted to the pump sump and cooling tower basin. Valves No. 528a, 529a, and 530a should all be closed. These valves are underground but have T-shaped extension handles and are located on 3 sides of the pump sump. Check to be certain that valves No. 226a and No. 224a, in the basement of Building 3042 at the heat exchanger, are fully open. Valve No. 226, on the pump discharge, and valve No. 224b, the cooling tower supply valve on the west side of the tower, should be open.

The sump pump may now be started and stopped a few times to fill the lines and force any entrapped air to the pump where it can be vented. The sump pump may be left running when the system flow is near normal (900 gpm) on the control room instrumentation. A control valve in the circuit allows the system flow to vary about the design value of 900 gpm.

If the reactor startup is imminent, the syphon may be started at this time. The syphon is located in the southeast corner of the cooling tower basin. The line should be filled, with the hose connected to the Tee in line 446, and then placed under water in the cooling tower basin. Syphoning action should be checked by placing the fingers over the pipe opening underwater to detect any suction.

5.6f. ORR Pool Cooling Control System

References: Drawings Q-1594B-1 through Q-1594B-6 and RC2-1-3F

Introduction

The instrument control system of the ORR pool cooling system has been centrally grouped in an instrument panel located just south of the pool shell-and-tube heat exchanger in the ORR basement. This centralization of controls should aid in reducing maintenance costs; and the new design incorporated in this system should provide better temperature control of pool water.

Mode of Operation

The temperature of the demineralized water returning to the reactor pool from the heat exchanger is controlled by an automatic system located on the panel adjacent to the heat exchanger in the basement of Building 3042. This temperature is recorded on the basement panel (TR-42) and indicated on a gauge in the control room. The normal control point is 88°F with the pool high temperature annunciator activated at 93°F.

The pneumatic throttling valve (TCV-42) in the secondary cooling loop may be positioned automatically by a controller on the rear of TR-42 or manually by moving the red index on TR-42 from 3 psi (valve open) to 15 psi (valve closed). The mode of valve control is selected by the transfer lever on the bottom of TR-42.

The spray-tower fan-control may be automatic or manual as selected by the SB switch in the control room. The automatic fan controller is located on the basement panel beneath TR-42.

In the automatic-fan-controller, cam switches are operated by a motor which is turned on or off by pressure switches (TX-42A and 42B) connected

to the same pneumatic line as the throttling valve. As the air pressure to TCV-42 is decreased to 4 psi, the valve is allowing maximum cooling; therefore, fan spread must be increased. TX-42A closes at 4 psi to drive the cam switch assembly up (clockwise as observed on the pointer on the fan controller) and thereby increase fan speed. The fan starts on low at 60° rotation and shifts to high at 120° rotation. Motor limit switches are located at 0° and 120°.

If the cooling is excessive, air pressure to TCV-42 will increase to close the valve. At 9 psi TX-42B will close to drive the cam-switch assembly down (CCW) and reduce fan speed. However, as long as the pneumatic pressure to TCV-42 is between 4 and 9 psi, the fan speed will not be changed; and TCV-42 will provide the necessary control.

Two toggle switches on the automatic-fan-control panel allow it to be tested. The "Auto-Test" switch will remain in "auto" unless the controller is to be tested. If this switch is put in the "test" position, the cam-switch assembly may be driven up or down by the second toggle switch which is marked "up-off-down".

The system can be operated in either the manual or automatic mode as follows:

To operate the system in "automatic":

1. Place the SB switch, located in the control room on the pool-system graphic panel, in the "auto" position.
2. The "auto-manual" lever, located inside TR-42 on the bottom, should be in "auto". The TR-42 instrument is the Foxboro recorder located in the instrument rack of the subject system in the ORR basement.

3. The temperature control point, as indicated by the red index on TR-42, should be set to the desired point. Normally, this will be $\sim 88^{\circ}F$.

4. The fan-controller "auto-test" switch, located on the front of the instrument rack of the subject system in the basement, should be in automatic.

To operate the system in "manual":

1. The SB switch, located in the control room on the pool-system graphic panel, should be placed in "manual".

2. Select the desired fan speed by pushing the appropriate button in the control room.

3. The "auto-manual" lever, located inside TR-42 on the bottom, should be placed in "manual" position.

4. TCV-42 should be adjusted to obtain the desired flow by using the red index on TR-42.

5. The fan-controller "auto-test" position is blocked out of the circuit by the SB switch when actuated in step No. 1 above.

It is important to note that TX-42C prevents the spray-tower pump from running if the pneumatic pressure to TCV-42 is $>\sim 9$ psi. FX-4B prevents the fan from operating unless the pump is running.

<u>Reverse Phase of Spray Tower Operation on Pool Secondary System</u>

<u>Reference</u>: RC2-13F, Rev. 11.

During cold weather, ice formation on the cooling tower distributors could cause severe damage and thus reduce the efficiency of the unit. To prevent this, a modification has been completed which permits a reversal of the fan to utilize the heat from the incoming water to melt ice which

may form. This operation will be used at the discretion of the engineer.

The system operates as follows: If the local or remote "stop" button in the fan control circuit is actuated, the fan motor slow-speed and high-speed contactors are disabled for about two minutes via a time delay. If further action on the part of personnel is not taken, the system will, following the two-minute delay, return to normal. If, however, during the two-minute delay the reverse push button located at the spray tower is actuated, the reverse mode is energized. Such action is indicated by illumination of the newly installed lights; one just below the "spray tower fan-operate" button in the control room and one at the spray tower next to the reverse push button. At the completion of the time delay, the low-speed contactor will be energized (indicated by the "off" lights going out in the control room and at the spray tower), starting the fan in the reverse direction.

To transfer operating conditions back to the normal mode of operation, it is necessary to push either "stop" push button (local or remote) and place the pool cooling mode switch in "automatic". After a two-minute delay, normal operation will be resumed.

It should be noted that actuation of the reverse push button, if the fan is running in the forward direction, does not affect operation; also, the actuation of the "high-speed" or "low-speed" push button, if the fan is running in reverse, has no effect. Placing the pool-cooling mode-switch in "automatic" during the reverse cycle is not effective in operating the fans; however, this does start the pool cooling pump.

When it is necessary to use the reverse mode of operation, the following steps should be followed (in order):

1. Push the "stop" button on the fan controls. This will stop the fan if in operation and actuate a timer which permits energizing the reverse circuit.
2. Within two minutes, press the "reverse" button. An illuminated "reverse" light will indicate the initiation of the request. After the time delay has timed out ($\sim$ 2 minutes), the "off" light circuit will be de-energized, and the reverse circuit will be completed. The fan will start in the reverse direction.
3. While the "reverse" phase is in operation, personnel should monitor the operation at the spray tower.
4. Upon the completion of the ice removal, the system should be placed in normal operation. This is accomplished in the following manner:
   a. Press the "stop" push button (either local or remote).
   b. After the two-minute delay, forward operation may be resumed in either the "manual or automatic" mode.

5.7. Cooling System, Corrosion Research

5.7a. Corrosion Test Stand

A number of test stands have been fabricated and are being tested for corrosion. These stands contain samples of 6-in. aluminum piping subjected to different environmental conditions. This testing is an attempt to gather data so that predictions on corrosion rates of lines in similar conditions can be made.

There are fourteen tests being conducted simultaneously. These are briefly described below. The aluminum tube is in contact as indicated.

1. Aluminum Pipe--Concrete, Corrosion Samples

   A-1. Aluminum, surrounded by glass wool and Sonotube, embedded in concrete and wetted.

   A-2. Aluminum, surrounded by glass wool and Sonotube, embedded in concrete and wetted.

   B. Aluminum, surrounded by glass wool and Sonotube, embedded in concrete and dry.

   C. Aluminum covered with Scotch electric tape, embedded in concrete and wetted.

   D. Bare aluminum, embedded in concrete and wetted.

   E. Bare aluminum, embedded in concrete and dry.

   F. Bare aluminum, embedded in concrete, with reinforcing rod 1-in. away from the aluminum, and wetted.

   G. Aluminum, surrounded by glass wool and Sonotube, embedded in concrete, with reinforcing rod 1 in. away from the aluminum tube, and wetted.

   H. Aluminum, surrounded by glass wool and Sonotube, embedded in concrete, with 1/16-in. diameter hole leak in the aluminum tube.

I. Aluminum, tarred, wrapped in building paper, and embedded in concrete, and dry.

J. Aluminum, with a 2-in.-diameter glass wool cylinder arranged logitudinally along the tube, embedded in concrete.

K. Aluminum, surrounded by glass wool and Sonotube, embedded in concrete, wetted and cast as follows:

(1) Concrete cast with Sonotube and glass wool packing already wet.

(2) Cracks and holes in the Sonotube so that soup from the grout can reach the Al.

(3) The assembly left so that grout hardens to the aluminum.

L. Aluminum, surrounded by glass wool and Sonotube, embedded in concrete wetted with a 25-ppm-Chromate solution.

M. Aluminum, surrounded by glass wool and Sonotube, embedded in concrete, wetted with a 25-ppm-Chromate solution.

These tests will be conducted for an indefinite period of time.

2. Operational Procedure

Demineralized water is supplied to a surge tank, Figure 5.14, from which the system is initially filled. After the initial filling, it operates only as a surge tank. The water is circulated through an electric heater, to the manifold which supplies each test stand, through the test stand, into a return manifold, and into the pump. The temperature of the system is thermostatically controlled at 130°F.

The system is started as follows:

ORNL-LR-DWG. 51016
UNCLASSIFIED

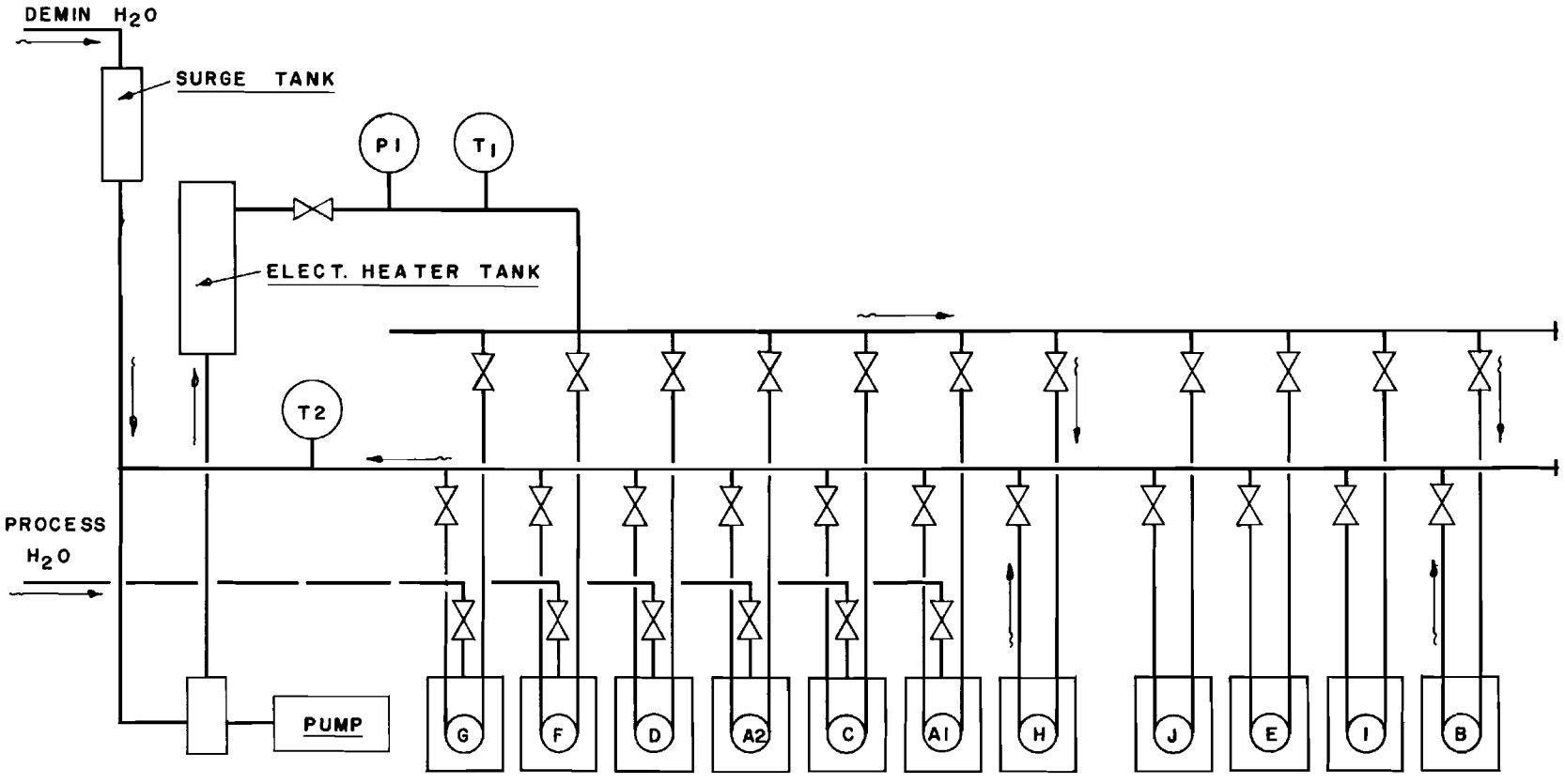

Fig. 5.14. Corrosion Test Rig

a. Fill the surge tank at least one-half full as noted on the sight gauge.

b. Turn the pump motor on. The electric heater is wired in such a manner that the pump must be running for the heater to operate.

c. Adjust the thermostat to 130°F.

d. Open the valves to supply water to the inlet and exit of each experiment.

e. Open the "Hoke" valves on the process water supply and regulate them to permit a dripping rate of approximately one drop/sec. This wets the material surrounding the aluminum tube.

f. Make checks as indicated on the Data Sheet, Example 5.3.

5.7b. Nash-Hytor Vacuum Pumps

References

Drawings D-33558, Piping Plan and Details; D-33559, Piping Elevations and Details; D-33562, Water and Exhaust Piping for Vacuum Pumps; ORNL LR-34474, Major Water Lines

Introduction

This vacuum system was devised for the purpose of removing moisture from the area between the ORR aluminum pool liner and concrete and, in particular, from the annular spaces around the major water lines which are embedded in the concrete walls. The constant vacuum of approximately 20 in. of Hg not only continuously removes the moisture of the air which has leaked into these regions and, thus, alleviates the corrosion problem, but

TX-2,88
(11-60)

ORR IMBEDDED ALUMINUM CORROSION EXPERIMENT

			Basement North					
Date	Time	Shift	Inlet Temp	Exit Temp	Water Pressure	Thermostat Setting	Tank Water Level	All H_2O Lines Dripping

Example 5.3.

it also serves as a leak-detecting device since periodic measurements are made and records kept of the amount of condensate collected in cold traps.

Description

The system consists of three Nash Hytor vacuum pumps with a capacity of 100 cfm at 26-in.-Hg vacuum, three 10-hr, 1800-rpm GE motors, three exhaust-water separators, piping, valves, gauges, and cold traps.

One vacuum pump, motor, separator, guage, etc. , is located in the basement on the north side of the pipe tunnel wall near the entrance to the north inlet (111) and exit (102) reactor primary water lines. The other two vacuum pumps, motors, etc., are located at the south wall of the pipe tunnel near the south reactor demineralizer. Of these two systems, the west vacuum system has evacuation lines running to the west pool liner, the reactor and center pool liners, and the pool inlet (203) and exit (201) water lines. The east vacuum system has evacuation lines to the south inlet (110) and exit (101) reactor primary water lines.

The evacuation lines of each system are brought together at a manifold on the suction side of each vacuum pump. The exhaust and condensate are dumped into the main sump in the basement in front of the pipe tunnel.

The only requirements necessary for normal operation (i.e., continuous evacuation of moisture) after the pumps are primed and operating are:

1. Periodic oiling of the roller bearings.
2. Constant supply of process water to seals.
3. 220/440 volts, 60-amp, 3-phase power to the GE motors.

Procedure

A cold trap is set up (one monthly for each evacuation line) by merely diverting the vacuum stress through a 5-gal. carboy which is

situated in an insulated container and surrounded by dry ice. The method is as follows:

1. Place the carboy in an insulated container (GI can) and surround it with a layer of dry ice ~6 in. deep.
2. The ends of two 1-in. diameter hoses should be connected with hose clamps to the lines which "T" off the evacuation line to be cold trapped. These are located before and after the line block valve.
3. Place the other two ends of the hose through a rubber stopper, and place the stopper in the top of the carboy.
4. Open both of the valves on the lines to which the hoses have been attached, and, at the same time, close off the evacuation line block valve.
5. Keep the cold traps iced for the collection period.
6. To remove the cold trap from the system, reverse the above procedure.

To start an evacuation system after an extended shutdown period, the procedure is as follows:

1. Turn the power switch to "on". This switch is located on the front of a switch box above each of the motors.
2. Press the reset button on the same switch box.
3. Open the process water valve to the pump seals.
4. Press the start button located beside the manifold.
5. Check the vacuum obtained at the suction side of the pump. While still watching this gauge, decrease the amount of seal water until a point is reached where the vacuum begins to decrease. Then open the seal water valve just enough to maintain the maximum vacuum <u>and no more</u>.

Taking a system out of service requires merely:

1. Pressing the stop button.
2. Shutting off the seal water.

For extended shutdowns for dismantling, reassembling, repairing, etc.

1. Take the unit out of service as above.
2. See bulletin No. I-P-V-L-335-E, "Installation and Operation of Nash Hytor Vacuum Pumps and Compressors", 1958, Nash Engineering Company, South Norwalk, Connecticut.

5.7c. Corrosion Coupons

In order to obtain corrosion data from locations in the ORR cooling systems other than the cooling-tower sump and the core assembly, a corrosion coupon holder was designed which could be adapted to several locations. Holders of this type are now in service in the strainer located in the 24-in. section of the core cooling-water outlet, the center pool of the three-section swimming pool, the cooling-tower sump, and the outlet of the secondary side of the pool cooling heat exchanger. A total of 240 coupons can be exposed in these four locations in addition to the 64 coupons in the core assemblies. The same five alloys have been used in these locations as have been tested in the core. These are 1100, 3003, 5052, 5154 and 6061 aluminum alloys.

All specimens were machined from 0.063-in. sheet to assure uniform size and shape. Dimensions are 1.00 in. x 2.50 in. with one 0.50-in. hole centered in the specimen. They were then washed in soap and water, pickled in chromic-phosphoric acid, rinsed, dried, and weighed before being attached to the mounting bars. Specimens were insulated from the mounting bar and stainless steel nut by Teflon insulators.

The test location identified as the heat-exchanger outlet is on the outlet side of the pool cooling heat-exchanger shell. This exposes the test coupons to hot, treated process water from the cooling tower. Temperatures at this point range from 85°to 95°F. After being cooled in the tower, the water passes over another test location in the cooling-tower sump at temperatures ranging from 75° to 85°F.

A third array of test coupons is located in the 24-in. strainer on the core-tank cooling water outlet. This loop circulates high-purity water to cool the ORR core. At the strainer the temperature averages 130°F.

The fourth set of coupons is exposed in the center section of the swimming pool where the demineralized water temperature is at approximately 100°F.

5.8. Water Transfer Systems

References

D-19425, D-22318-R-2, D-22242, D-18774, D-22322-R-2, D-22321-R-3, D-19941, ORNL 55-8-183 "Auxiliary Pumps for ORR Process Water Systems", and D-Q1594-9 "Pool Cooling and Circulating System Flow Sheet".

5.8a. Draining Storage Tanks to Retention Ponds

If for any reason the storage tanks needs to be drained, the following procedure will be used:

1. Close valve No. 219b, located on the suction leg of the fill-drain pump in the basement of Building 3042. This valve is closed to prevent the draining of either part of the system.
2. Close the valves on all inlet lines to the storage tanks. These are located at the storage tank area.

   204d, on the drain line from the pool system

   223a, on the drain line from the pool system

   413a, a demineralized water line from Building 3004

   418a, a demineralized water line from Building 3004

   109b, water from the reactor system

   109Xa, water from the reactor system
3. Open these valves which are also located at storage tank area.

   219a, will drain the west storage tank

   220a, will drain the east storage tank

   507a, main drain valve to the retention ponds

   This valve arrangement will drain water from the storage tanks to the retention pond.
4. After the storage tanks have drained, return the valves to their normal positions.

5.8b. Filling the Storage Tanks

To fill the storage tanks with demineralized water from Building 3004:

1. Close valves No. 204d, 219a, 220a, 223a, and 507a.
2. Open valves No. 413a and 418a.

5.8c. Draining Reactor Pool Through Primary Cooling Loop to Storage Tanks

The purpose of this procedure is to drain the water in the reactor pool to a level equal to the elevation of the suction leg of the pool circulating pump. This is slightly below the top of the reactor vessel. Occasionally, during shutdown work, this may be necessary. When such an operation is required, the following procedure should be used:

1. The following valves are normally closed. Check to be sure they are closed.

   Valves No. 204a and No. 206a--These are 2-in. IPS drain lines from the center and west pools located in the north bank of valves.

   Valve No. 502a, a bypass line to the retention ponds, located in the north bank of valves.

   Valve No. 218a, suction of the drain-fill pump.

   Valve No. 228a, discharge line of the demineralizer.

2. The following valves are normally closed, but should be opened for this operation.

   Valves No. 223 (west) and/or No. 204d (east), depending on which storage tank is to be used. These are located in the vicinity of the storage tanks.

Valve No. 209a which is in the connecting line No. 209 between lines No. 201 and No. 204.

3. Valve No. 204b, a normally open valve, should be open.
4. Valve No. 209a can be used as the "shut-off" valve. This valve is located in Building 3042 basement in the north bank of valves.

5.8d. Draining the Center Pool to the Storage Tanks

Occasionally, it may be necessary to drain the center pool. It can be drained either to the storage tanks or to the retention ponds. If the water is of good quality, it is put in the storage tanks for further use. To permit the transfer of this water to the storage tanks, the following step-wise procedure should be followed:

1. The center pool will be drained through line No. 204.
2. The following valves, normally closed, should be checked in the closed position:

   No. 209a, in the north bank of valves, basement of Building 3042

   No. 502a, in the north bank of valves

   No. 206a, drain from the west pool.

   No. 228a, in the north bank of valves in the basement of Building 3042.

   Line No. 228-3 in. is an interconnecting line from No. 204-4 in. to No. 216-3 in.

   No. 218a, near the suction of the fill-drain pump.

   No. 217a, in the north bank of valves

   No. 507, the drain of the storage tanks.
3. The following valves, normally closed, should be <u>opened</u>.

No. 204a, on the drain leg of the center pool in the north bank of valves in the basement of Building 3042.

No. 223a and No. 204d, on the west and east tanks, respectively. One or both may be opened, depending upon where water is to be sent.

4. Valve No. 204b, located on line No. 204-4in. in the north bank of valves in the basement of Building 3042, should be used for controlling the flow. A maximum flow rate of 200 gpm through the 204-2 in. line is available due to the difference in elevation.
5. After completion, restore all valves to their normal positions.

5.8e. Draining the West Pool to the Storage Tanks

Occasionally, it may be necessary to drain the west pool to the storage tanks. This will be done only if the water is of such quality that it should be saved.

1. Check to see if the storage tanks have the necessary space.
2. Close the following valves, on the north bank in the basement of Building 3042.

   No. 204a

   No. 209a

   No. 502a

   No. 228a

   No. 218a

   No. 217a

3. Open the following valves:

   No. 206a, on the north bank in the basement of Building 3042

   No. 204b, on the north bank in the basement of Building 3042

   No. 204d and/or 223a, located in the storage tank area

4. After the desired amount of water has been drained, return the valves to their original positions.

5.8f. Draining the Reactor Pool to the Retention Ponds

In the event it becomes necessary to drain the water from the reactor pool and there is no storage apace available in the storage tanks, it must be drained to the retention ponds.

If the gates are in place, the water in the reactor pool will drain only to the level of the exit line of the primary cooling loop. There is no drain line below this point in the reactor pool. The procedure for draining the reactor pool to the retention pond is:

1. Check the retention ponds to see if they are empty enough to take the amount of water to be drained.

2. Close the following valves:

   No. 201, in the suction side of the reactor pool cooling pump

   No. 204a, in the north bank

   No. 206a, in the north bank

   No. 228a, in the north bank

   No. 218a, in the north bank

   No. 204b, in the north bank

3. Open the following valves:

   No. 209a, in the north bank

   No. 502a, in the north bank

4. After the water has been drained, return the valves to their original positions.

5.8g. Draining the Center Pool to the Retention Ponds

In the event of gross contamination, it may be advantageous to drain the center pool to the retention ponds. To empty this pool directly to the retention ponds:

1. The following valves, normally closed, should be checked in the closed position:

   No. 209a, in the north bank

   No. 502a, in the north bank

   No. 228a, in the north bank; line No. 228 is an interconnecting line from No. 204 to No. 216.

   No. 218a, located on line No. 218 near the suction of the fill-drain pump.

2. No. 204b is located on line No. 204 in the north bank of valves and should be closed.
3. Valve No. 240a is located on line No. 204, the drain leg of the center pool, in the north bank of valves in the basement of Building 3042, and will be closed.
4. Valve No. 502a, described above in (1) will then be opened.
5. Upon completion, restore all valves to their normal positions.

5.8h. Draining the West Pool to the Retention Ponds

It may be desirable to lower the water in the west pool to permit certain operations to be performed. In the event the water is not to be stored, it will be sent to the retention ponds.

1. Each retention pond should be checked to determine if sufficient space is available. If space is not available, consult the shift foreman.

2. Close the following valves:

   No. 409b, the demineralized water supply to the west pool, located near the pool top or 3rd level.

   No. 207a, the fill line to the west pool, located in the south bank of valves.

   No. 204a, the drain line of the center pool, located in the north bank of valves.

   No. 209a, the drain line from the primary cooling loop, located in the north bank of valves.

   No. 218a, on the suction leg of the fill-drain pump and in the north bank of valves.

   No. 204b, on the main drain line from the storage pools to storage tanks in the north bank of valves.

   No. 228a, in the north bank of valves.

   No. 507a, the storage tank drain at the storage tank site.

3. Open the following valves:

   No. 502a, on a direct line to the retention ponds, located in the north bank of valves.

No. 206a, located in the north bank of valves, on the drain line to the west pool. This valve should be used to regulate the flow rate.

4. Following the completion of this operation, all valves should be returned to their normal positions.

5.8i. Filling Reactor Pool from Storage Tanks Through the Pool Demineralizer

To fill the reactor pool, from water stored in the storage tanks, by passing it through the pool demineralizer if the water in the storage tanks is not of adequate quality:

1. Open valves No. 219a and No. 220a at the storage tanks.
2. Valve No. 507a at the storage tanks must be closed.
3. Open valve No. 208a in the basement of Building 3042.
4. Open valves No. 214c, 214d, 214f, 214g, 215a, 215b, and 216b at the pool demineralizer.
5. Close valves No. 205b, 218a, 217a, and 214b in the Basement of 3042.
6. Start the fill-drain pump.
7. Open valve No. 227b.

Caution: Do not let storage tanks run completely dry or the pump will cavitate. If the pool is completely empty, the water in the storage tanks will not be sufficient for filling the pool entirely.

5.8j. Filling Center Pool from Storage Tanks Through the Pool Demineralizer

In filling the center pool from the storage tanks, a flow system can be obtained which will pass the storage tank water through the pool demineralizers enroute to the pool. This will further demineralize the water, which may have been standing in the storage tanks for some time.

1. The following valves must be closed:

No. 218a, located on the suction side of the fill-drain pump

No. 205b, located on the discharge side of the fill-drain pump

No. 217a, located on the discharge to pool drain line No. 204, an interconnecting line from the fill-drain pump.

No. 214b, located on the discharge side of the main demineralizer pump.

Note: The main demineralizer pump must be shut down while the center pool is being filled from the storage tank through the pool demineralizer.

No. 227b, located on the discharge side of the fill-drain pump on the line going to the pool demineralizer. This valve is used as a throttle valve and will be opened at full throttle after the pump is started.

No. 208a, located on an interconnecting line between the discharge line of the fill-drain pump and the Primary Cooling Loop.

No. 207a, located on the drain line of the west pool.

No. 143a, located on an interconnecting line between the discharge line of the fill-drain pump and line No. 110 of Reactor cooling.

Before the flow is started, a valve arrangement must be made on the pool demineralizer. See Section 5.6b-2 for "Through-Flow" valving.

2. The following valves must be opened.

   No. 219a, on the drain line of the west storage tank

   No. 220a, on the drain line of the east storage tank

   No. 219b, on the main line of the east and west storage tanks at the point where the main drain line connects to the suction side of the fill-drain pump.

   No. 216c, on the discharge line from the pool demineralizer

   No. 205c, on the fill line to the center pool

3. Start the fill-drain pump and open the throttle valve No. 227b all the way.

5.8k. Filling the West Pool from Storage Tanks Through the Pool Demineralizer

To further demineralize the water in the storage tanks at the time of filling, the water can be passed through the pool demineralizers enroute to the pools. This will permit water of high specific resistance to be used in the pool.

In utilizing the circuits necessary for this operation, it is imperative to isolate all other branches.

1. Isolate the demineralizer pump by closing valve No. 214b, which is the discharge of the demineralizer pump. The pump should be stopped.

2. The following valves should be closed.

No. 507, on the drain line of the storage tanks to the retention ponds.

No. 218a, in the north bank

No. 205b, in the south bank

No. 217a, in the north bank

No. 205c, the fill line of the center pool, located in the south bank of valves in the basement of 3042.

No. 208a, in the south bank of valves in the basement of 3042.

No. 228a, in the north bank of valves in the basement of 3042

No. 227b, in the north bank of valves in the basement of 3042, and used as the throttling valve of the pump

No. 143a, to the reactor system

3. Open the following valves:

   No. 219a and/or 220a, at the storage tank site on the tank drain line

   No. 219, in the south bank of valves in the basement of 3042

   Prepare demineralizers for "Thru-Flow". See section 5.5a.

   No. 216a, in the north bank of valves in the basement of 3042

   No. 207a, fill line to the west pool, located in the south bank of valves.

4. Start the drain-fill pump and open valve No. 227b, located in the north bank of valves, to adjust the desired flow rate.

5. It must be pointed out that the storage tank should never be pumped completely empty with the pump. This is to protect the pump from cavitation.

6. Upon completion, restore all valves to their normal positions.

5.8l. Filling the Reactor Pool from the Storage Tanks

This procedure is used only if the water in the storage tanks is of good quality. If the pool is completely dry, the water in the storage tanks will not be sufficient for filling the pool directly.

1. Open valves No. 219a and 220 at the storage tanks.
2. Valve No. 507a at the storage tanks must be closed.
3. Open valves No. 219b and 208a in the basement of Building 3042.
4. Valves No. 143a, 217a, 205d, 207b, and 205b in the basement of Building 3042 must be closed.
5. Start the fill-drain pumps.
6. Open valve No. 205b.

Caution: Do not let the storage tanks run completely dry, or the pump will cavitate.

5.8m. Filling the Center Pool from the Storage Tanks

If at any time water has been removed from the center pool due to contamination or for working in the pool with a lower water level than normal, the following procedure for filling the pool will be used.

1. Close the following valves:

   No. 207a, on the inlet line to the west pool.

   No. 204a, on the drain line from the center pool.

   No. 206a, on the drain line from the west pool.

   No. 208a, on the inlet line to the Reactor pool cooling system

   No. 216b, on the line from the demineralizers to the discharge side of the fill-drain pump.

   No. 218a, on the bypass line from the main drain line to the inlet side of the fill-drain pump.

No. 143, on the line from the fill-drain pump to No. 110, the 24-in. inlet to the reactor.

No. 217a, on the discharge line from the fill-drain pump to the main drain line, No. 217.

No. 227b, on the line from the discharge side of the fill-drain pump to the demineralizers.

2. Open the following valves:

   No. 205c, on the inlet line to the center pool.

   No. 219b, on the inlet line to the fill-drain pump.

3. Start the pump and control the flow at 300 gpm with valve No. 205b on the discharge side of the pump.

4. After completion, restore all valves to their normal positions.

5.8n. Filling the West Pool from the Storage Tanks

This procedure is used only if the water is of good quality. If the pool is completely dry, the water in the storage tanks will not be sufficient for filling the pool completely.

1. Make sure valves No. 219a and 220a, at the storage tanks, are open.
2. Valve No. 507a at the storage tanks must be closed.
3. Open valves No. 219b and 207a in the basement of Building 3042.
4. Close valves No. 143a, 217a, 205d, 208a, and 205b in the basement of Building 3042.
5. Start the fill-drain pump.
6. Open valve No. 205b.

Caution: Do not let storage tanks run dry, or the pump will cavitate.

5.8o. Sending Water from 3004 Storage Tank or Demineralizers to the West, Center, or Reactor Pool

If water is needed for one or more of the three pools and the ORR storage tanks are empty, it can be obtained from Building 3004. There are two sources in Building 3004 from which demineralized water can be obtained. One is from the main storage tank, and the other is directly from the demineralizers.

1. Make sure the following valves are closed to prevent water from draining out at the same time it is being put in.

   No. 204a, gate valve on the north bank in the basement of 3042.

   No. 206a, gate valve on the north bank in the basement of 3042.

   No. 209a, gate valve on the north bank in the basement of 3042.

2. Open one or more of the following valves to send water to the desired pool:

   No. 410 will permit the flow of demineralized water to the reactor pool. It is located on the wall of the north balcony of the reactor structure.

   No. 411 will permit the flow of demineralized water to the center pool. Same location as above.

   No. 409 will permit the flow of demineralized water to the west pool. Same location as above.

3. After obtaining the desired amount of water, return the valves to their original positions.

5.9. Auxiliary Systems

References

ORNL D-32991, 32894, 32895, 32896, 32899, 36161

5.9a. Beam Holes

The ORR beam holes are of circular section, decreasing in diameter from approximately 9 1/8 inches at the face of the concrete to approximately 6 3/4 inches at the reactor vessel. The pipe which encases a beam hole is designated as the liner. Each beam hole is equipped with a collimator plug or, in its absence, a dummy plug. The plug seals the outer end of the beam hole and extends inward to within approximately three feet of the reactor vessel. Service piping enters through the plug.

During installation or operation of experiments at the beam holes, it sometimes becomes necessary to fill the liner, the plug, or both with water to provide biological shielding at the first level. Subsequently, the plug and/or liner must be drained, dried, and possibly placed under continuous air or helium purge.

The purpose of this procedure is to describe the facilities provided to accomplish the above operations and to set down in step by step sequence the method by which the operations are to be done. This revised procedure includes draining the plugs and liners to the off-gas system and, consequently, to the off-gas seal tank. The reason for draining to the off-gas system is that in previous drainings to the process drain, airborne activity has been released to the building proper from the floor drains. Draining to the off-gas system should eliminate further airborne activity releases.

The service piping to the ORR beam holes is depicted on the ORNL drawings as referenced. Six piping headers are located in the basement adjacent to the east end of the reactor wall and directly under the beam holes. These headers consist of:

1. Water supply from the pool cooling system.
2. Water return to the pool cooling system.
3. Plant air reduced to 15 psi.
4. Warm drain.
5. Off-gas.
6. Helium supply from outside the building.

Lines from the above listed headers lead to each liner and plug in such a way that they can each, separately, be:

1. Filled with water, air or helium,
2. Purged with air or helium (continuously), or
3. Filled with continuously recirculated water.

Precautions

Certain very serious adverse effects will result from draining and/or filling one or more beam-hole liners or plugs unless the precautions listed below are strictly adhered to. It is expected that personnel from the Reactor Operations Department will perform all operations at the beam holes because of these hazards which include: (1) severe radiation exposure of personnel, (2) false and dangerous signals to the reactor nuclear instrumentation, (3) sudden changes in reactor power, and (4) damage to experiments.

1. Liner

   a. Liner draining and filling

      (1) Do <u>not</u> drain or fill a beam-hole liner unless the reactor is <u>down</u>.

      (2) <u>Always</u> have Health Physics coverage when draining a beam-hole liner.

      (3) <u>Always</u> maintain a flow of water through the liner if the liner is to stay full for several hours.

      (4) <u>Always</u> close, tightly, both supply water valves and both return water valves when the liner is to remain drained.

   b. Liner purging or pressurizing

      (1) Do not exceed the design pressure of 30 psig.

      (2) Do not dump excessive amounts of purge gas into the drain. This is the warm drain and is open to the building.

2. Plug

   a. Plug filling and draining

      (1) <u>Always</u> be certain that a radiation hazard will not result from draining. If in doubt, obtain Health Physics coverage.

      (2) <u>Always</u> maintain a flow of water through the plug if it is to remain full of water for several hours.

   b. Plug purging or pressurizing

      (1) Do not exceed the design pressure of 30 psig.

      (2) Do not dump excessive amounts of purge gas into the drain.

Operation

1. General

   a. All operations performed in connection with the beam-hole services are to be the responsibility of the Reactor Operations Department. Valving is to be done by Operations Department personnel. Any deviation from this practice will require a supplement or revision to this procedure.

   b. The importance of Item a, above, is very evident from tests during which the beam-hole liners were drained and filled with the reactor at low power. Nuclear instrument readings were observed to vary by a factor of five (5).

2. Beam-Hole Liners

   All valves for the beam-hole liner services are located in the basement immediately adjacent to the headers. The water supply and return lines for each liner have been disconnected to prevent inadvertent filling. It will be necessary to reconnect these lines to perform the filling operation described below.

   Several of the liners have also been equipped with a dry-rite chamber through which air is introduced to the top of the lines, and subsequently withdrawn to the off-gas system from the bottom of the lines. This provides a continuous purge of the lines, and is further protection against filling the lines with water. The continuous air purge is to be checked each day shift.

   a. Filling the liner with water (To be done only when the reactor is down).

(1) Be sure that the necessary precautions are satisfied. See "Precautions" of this procedure.

(2) Determine the status of the liner to be filled (i.e., purging, empty, etc.) from the Beam-Hole Status Sheet in the control room.

(3) Referring to the applicable part of this procedure, stop the operation in progress.

(4) Determine, without doubt, that all valves to the liner concerned are tightly closed.

(5) Open the valve connecting the water return line to the off-gas header. This valve is identified as: "Off-Gas".

(6) Open completely both water supply valves identified as: "Supply No. 1" and "Supply No. 2".

(7) Observe the flow through the sight-flow indicator in the off-gas line. When gas ceases to flow and water flow is established, close the off-gas valve.

(8) Open both valves to the water-return lines identified as: "Return No. 1" and "Return No. 2". Adjust the flow to approximately 40% of full scale on the Rotameter. (100% Scale Reading is 8.8 gpm.)

(9) Enter the status of the beam-hole liner on the Beam-Hole Status Sheet in the control room.

(10) Using the applicable procedure, empty the off-gas catch tank.

b. Draining water from the liner (To be done only when the reactor is down).

(1) Be certain that all precautions pertaining to draining the liner are satisfied. See "Precautions" of this procedure.

(2) Determine the status of the liner to be drained from the status sheet in the control room. Water should be continuously recirculating.

(3) Close both water return valves: "Return No. 1" and "Return No. 2".

(4) Close both water supply valves: "Supply No. 1" and "Supply No. 2".

(5) Open the valve connecting the drain to the off-gas header; this valve is labeled "Off-gas".

(6) Open the air supply valve identified as "air" and the air supply adjustment valve. This will force water from the liner to the off-gas seal tank. Adjust and observe the flow in the small rotameter.

(7) When air flow is established to the off-gas, adjust the air flow through the small rotameter to 0.8 of full scale and purge the liner for 30 minutes. (Using the "off-gas" valve).

(8) If the liner is to be left drained without purge,

(a) Close the "off-gas" valve,

(b) Close the "air valves",

(c) Record the status on the Beam-Hole Status Sheet in the control room.

(9) If the liner is to left under continuous purge, proceed to the applicable part of this procedure.

(10) Using the proper procedure, drain the off-gas catch tank.

c. Purging the liner with air or helium

(1) Be certain that all applicable precautions are observed. See "Precautions" of this procedure.

(2) Determine that the liner is properly drained, and that all liner valves are closed. Note: If the liner has just been drained, air purge will have been established.

(3) Open the air supply and adjustment valve or the helium supply valve as desired.

(4) Open the valve connecting the drain line to the off-gas header labeled: "Off-gas". Adjust and observe the flow through the small rotameter.

(5) Adjust the air or helium flow to the desired level using the valve indicated in (4) above.

(6) Enter the status on the Beam-Hole Status Sheet in the control room.

d. Stopping liner helium or air purge

(1) Close the valve connecting the drain line to the off-gas header labeled "off-gas".

(2) Close the air or helium supply valve as applicable.

(3) Enter the status of the liner on the Beam-Hole Status Sheet in the control room, or proceed to the applicable part of this procedure.

3. Beam-Hole Plugs

Service piping for the beam-hole plugs extends from the headers in the basement through the first floor to valving manifolds at the first level.

a. Filling the plug with water

(1) Be certain that the precautions outlined in "Precautions" are satisfied.

(2) Determine the status of the plug to be filled by referring to the Beam-Hole Status Sheet in the control room.

(3) Referring to the applicable part of this procedure, stop the operation in progress.

(4) Determine that all valves at the first level manifold are closed lightly.

(5) Determine that the plug service valves in the basement are as follows:

(a) Open:

Supply

Return

Off-gas

(b) Closed:

Drain

Air

(6) Perform the following valving at the first level manifold:

(a) Open the valve to the pressure gauge.

(b) Open the valves No. 1 and No. 3 which connect the top of the ball-float trap to the off-gas header.

Note: This ball float trap is located above the first floor manifold and is not to be confused with the reverse acting trap in the basement.

(c) Open valve No. 4. This will start water into the plug. The pressure gauge should show an increase and air or other gases in the plug should escape to the off-gas system. Observe the flow through the sight-flow indicator in the off-gas line. If water is flowing, the ball-float trap is not functioning properly and this operation must be stopped until repairs can be made.

(d) After five minutes, slowly open valve No. 7 which is the water return valve at the inlet to the large rotameter. If gas bubbles through the rotameter are excessive, close valve No. 7 and recheck the preceding steps. If water flow occurs (with a few gas bubbles), adjust the flow to 15% of rotameter scale, using valve No. 7.

(e) Recheck the valving. Numbers 4, 3, 1, and 7, and the pressure gauge valve should be open. All other first level manifold valves should be closed <u>tightly</u>.

(7) If the external shielding is to be removed or work is to be done at the facility, Health Physics coverage is mandatory.

(8) Record the status of the beam-hole plug on the status sheet in the control room.

b. Draining water from the plug

(1) Be certain that all precautions pertaining to draining the plug are satisfied. See "Precautions".

(2) Determine the status of the plug from the Beam-Hole Status Sheet in the control room. Water should be continuously recirculating.

(3) Perform the following valving at the first level manifold.

(a) Close valve No. 4 (H_2O supply).

(b) Close valves No. 1 and No. 3 (off-gas from the top of the ball-float valve).

(c) Close valve No. 7 (H_2O return).

(4) Determine that the plug service-valves in the basement are as follows:

(a) Open:

Off-gas

Air

(b) Closed:

Supply

Return

(5) Perform the following valving at the first level manifold.

(a) Open the valve to the pressure gauge.

(b) Open valves No. 5 air and No. 8 purge which will allow air to the top of the plug. The air pressure should be reflected at the pressure gauge.

(c) Open valve No. 9. This valve connects the bottom of the plug to the off-gas line.

(d) Slowly open valve No. 3 while observing the flow through the off-gas flow indicator. Water should flow until the lines are blown clear and then air flow should be established. If this does not occur, close the off-gas valves and recheck the preceding steps.

(e) Purge the liner with the air for 30 minutes after air flow is established.

(f) Recheck the valving. Numbers 3, 5, 8, 9, and the valve to the gauge should be open. All other valves should be closed. Note: Regulate flow with No. 5.

(6) If the plug is to be left drained without purge:

(a) Close the following valves at the first level manifold: No. 3 (off-gas)
No. 9 (off-gas)
No. 5 (air)
No. 8 (purge)

(b) Determine that all plug service-valves in the basement are closed.

(7) If the liner is to be left under continuous purge, proceed to the applicable part of this procedure.

(8) Using the proper procedure, drain the off-gas catch tank.

c. Purging the plug with air or helium

(1) Be certain that all applicable precautions are observed. See "Precautions".

(2) Determine that the plug concerned is properly drained.

Note: If the plug has just been drained, an air purge will have been established.

(3) Close all valves at the first floor manifold.

(4) Determine that the basement valves are as follows:

(a) Open:

Air (if air purge is desired)

Off-gas

(b) Closed:

Supply

Return

Air (if Helium purge is desired)

(5) Perform the following valving at the first floor manifold:

(a) Open valve No. 5 (air) or valve No. 10 (on the small rotameter-helium supply) as desired.

(b) Open valve No. 8 (purge)

(c) Open valve No. 9 (off-gas).

(d) Slowly open valve No. 3 (off-gas) until the desired flow is obtained. With helium, the rotameter will indicate flow.

(e) Recheck the valving. Numbers 5 or 10, 8, 9, and 3 should be open. All others should be closed tightly.

(6) If any water entered the off-gas header, empty the catch tank using the applicable procedure.

(7) Record the plug status on the status sheet in the control room.

d. Stopping plug helium or air purge

(1) Perform the following valving at the first level manifold.

(a) Close valve No. 3 (off-gas).

(b) Close valve No. 9 (off-gas from bottom of plug).

(c) Close valve No. 5 (air) or No. 10 (helium) as applicable.

(d) Close valve No. 8 (purge).

(2) Enter the status of the beam-hole liner on the status sheet in the control room, or proceed to the applicable part of this procedure.

5.9b. Freezing Precautions

The freezing of water in unsheltered portions of the ORR water system could lead to reactor shutdown, extensive damage to equipment, and costly maintenance. The prevention of freezing, therefore, is considered an essential part of operation.

Precautions against freezing in these areas include steam and electric heating and steam tracing. It is the purpose of this procedure to describe these systems and their operation.

General Procedures

1. When to initiate freezing precautions

a. The control desk operator will notify the reactor supervisor when outside temperatures reach 32°F.

b. The reactor supervisor will, upon receiving notification of freezing temperatures, ascertain that the precautionary operations are effected.

2. When to recheck the area

   a. Steam trace lines. Check for steam flow twice per shift during freezing weather.

   b. Electric and steam heaters. Check for proper operation <u>at least</u> two times per shift during freezing weather.

      (1) Check temperature of steam traps on exit of steam heaters.

      (2) Check temperature of electric heaters.

<u>Air Cooler Area</u>

1. Steam Heaters

   a. Description: Four or more finned radiation-type steam heaters are located just under each of the eight air coolers. Steam control valves located upstream from these heaters open automatically when the air, after passing over the coolers, reaches a temperature of 35°F. This allows steam to enter the heaters. The purpose of these heaters is to prevent freezing in the finned section of the air coolers during unforeseen shutdowns.

   b. Operation: (Figures 5.15 and 5.16)

      (1) Open air cooler area main valve No. 2. (This valve is normally open).

      (2) Open manual valves at the inlet and exit of each control valve (16 valves).

      (3) Close the bypass valves around the control valves.

ORNL-LR-DWG. 51018
UNCLASSIFIED

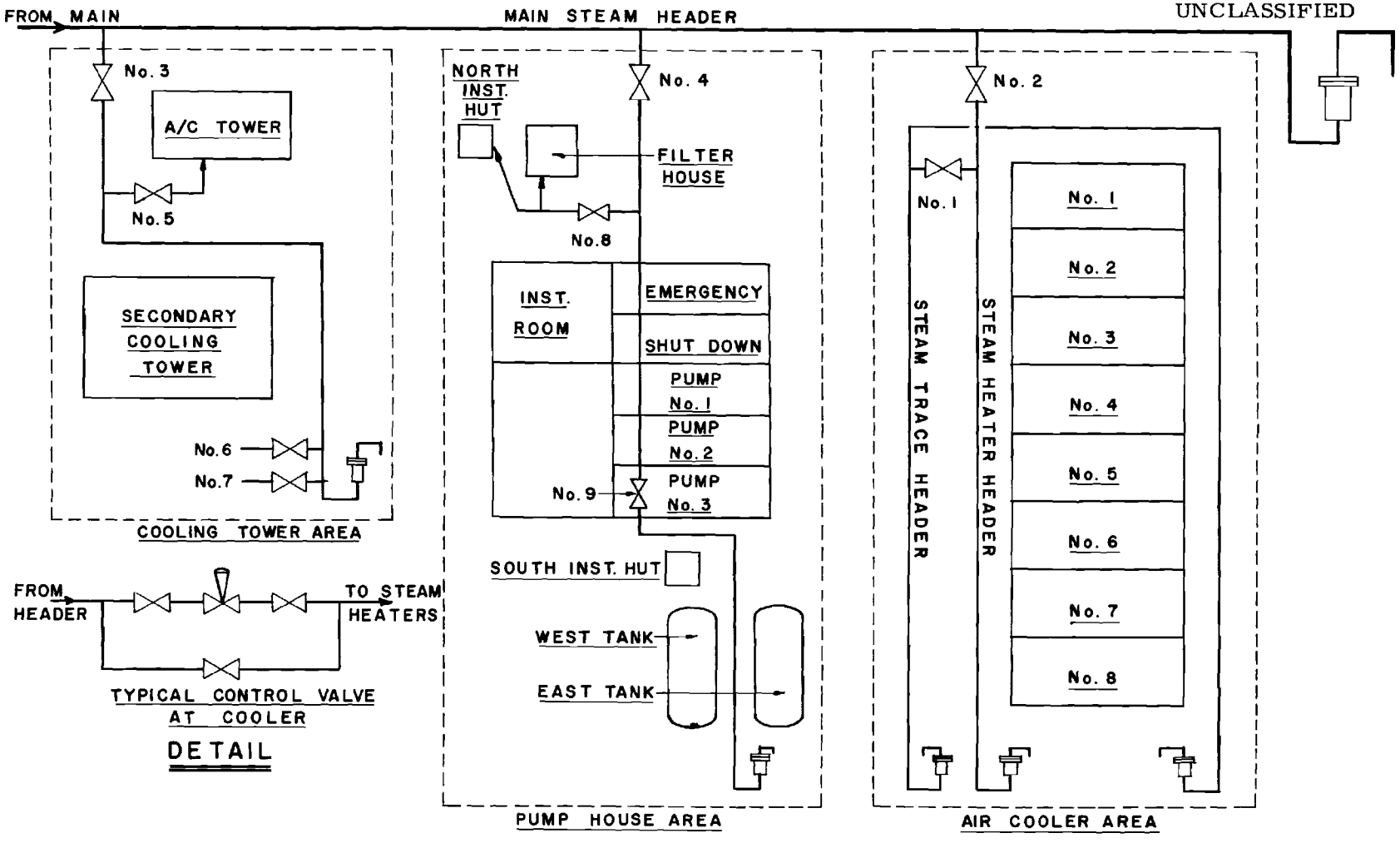

Fig. 5.15. Steam Tracing System

ORNL-LR-DWG. 51019
UNCLASSIFIED

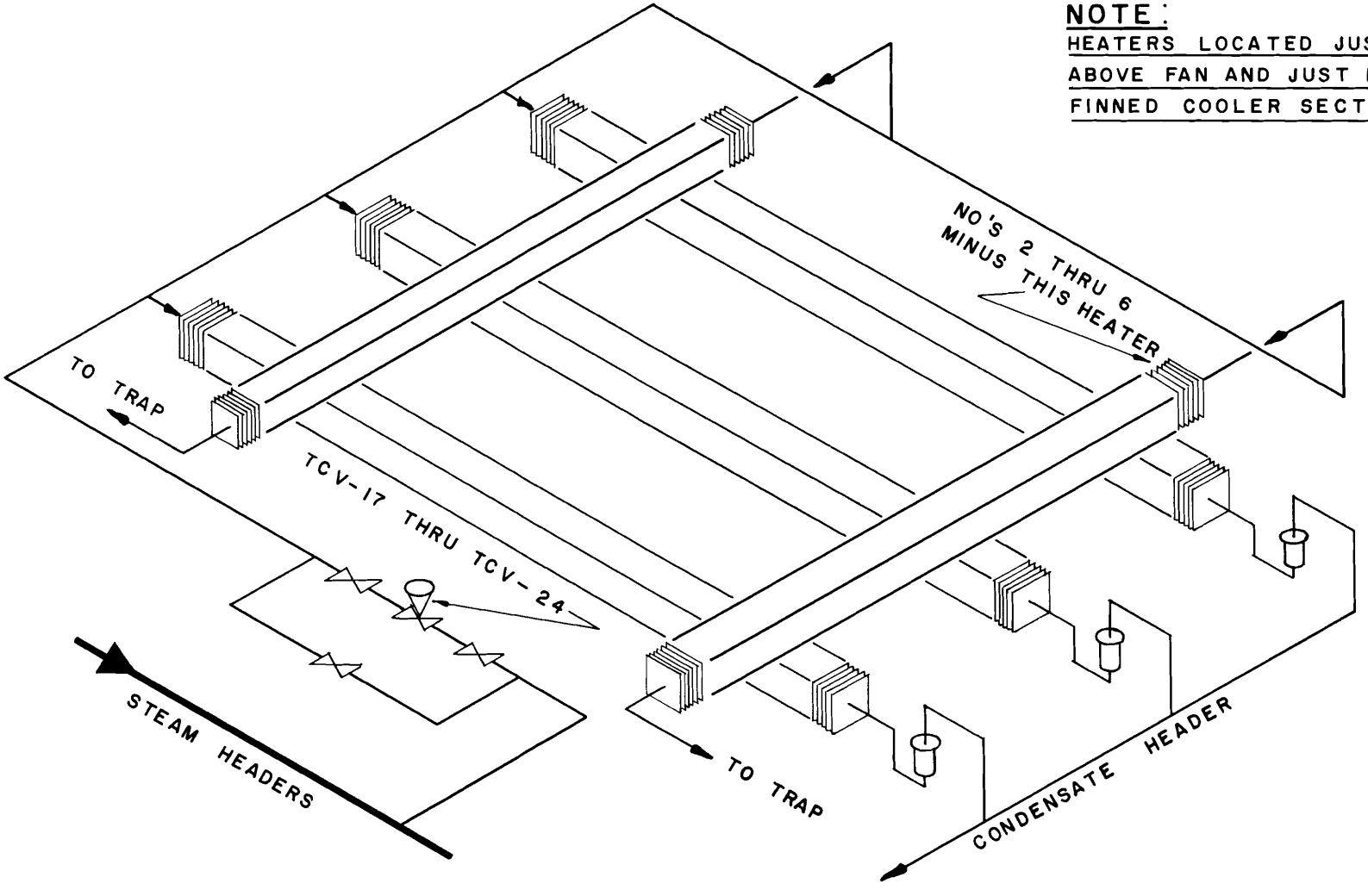

Fig. 5.16. Steam Tracing at Air Coolers

(4) Check the temperature and operation of the steam traps at:

(a) The end of the main header (1 trap).

(b) The outlet of each heater (34 traps).

c. Shutdown: This system of heaters is to be left in operation continuously during the winter months. A shutdown date will be determined by the day supervisor.

2. Steam Tracing

a. Description: Steam trace lines are provided for the vent and drain lines at inlet and exit of the air coolers (a total of 32 lines). The purpose of the steam trace lines is to prevent freezing in these lines where circulation does not normally occur.

b. Operation:

(1) Open supply valve No. 1.

(2) Check for steam flow at the exposed end of each steam trace line (32 crimped ends).

(3) Check the temperature and operation of the steam traps at the north end of the steam trace headers (2 traps).

c. Shutdown: This system is to be shut down when the temperature rises above 32°F, even if shutdowns occur daily. Shut down by closing the steam supply valve No. 1.

Pump House Area

1. Pump Cubicles

   a. Description: Each room in the pump house is heated by thermostatically controlled steam heaters. The normal set point for heaters in this area is 65°F. Power for fans is supplied from lighting panel LP-1, breakers 12 and 16, located in the instrument room of the pump house.

   b. Operation:

      (1) Open main supply valve No. 4 (this valve is normally open).

      (2) Check the temperature and operation of the steam traps at each heater (6 traps).

      (3) Check the operation of the heater fans by raising or lowering the set point at the thermostat. Return to the 65°F setting after the test.

      Note: It is not considered necessary to check the fan operation twice each shift. One check each shift during freezing weather will be sufficient.

   c. Shutdown: This system of heaters is to be left in operation continuously during the winter months. A shutdown date will be determined by the day supervisor.

2. Bypass Area

   a. Description: A steam trace line is provided for the bypass filters, which are located just north of the pump house, and for the instrument lines to the north instrument hutment. Electric heaters are provided for the instrument hutment in

this area. Power for these heaters is supplied from light panel LP-1, breaker number 19. The cabinet is located in the instrument room of the pump house.

b. Operation:

(1) Open valve No. 8 (outside north wall of pump house).

(2) Check for steam flow from the end of the steam trace located inside the filter housing.

(3) Check for steam flow at the end of the steam trace line to the instrument lines at the north hutment.

(4) Turn the heater switch (inside instrument hutment) to "on" position.

(5) Check the temperature of the strip heaters to assure proper operation.

c. Shutdown: This system is to be shutdown when the temperature rises above 32°F, even if shutdowns occur daily. Shut down by closing the steam supply valve.

3. Storage Tanks

a. Description: Steam trace lines are provided for piping at the storage tanks. The instrument hutment in this area is electrically heated. Power for the heaters is supplied from cabinet number LP-1, breaker 20, located in the instrument room of the pump house.

b. Operation:

(1) Open steam valve No. 9, located inside the pump house directly over No. 3 pump.

(2) Check the temperature and operation of the steam trap

at the end of the trace header (between the tanks at the south end).

(3) Check the steam trace lines around the instrument tubing under the north ends of the tanks for steam flow (two crimped ends).

(4) Check the temperature of the steam trace lines to:

(a) Storage tank inlet lines No. 204 and No. 223.

(b) Demineralized water make-up lines No. 413 and No. 418.

(c) Drains from the air coolers lines No. 109 and No. 109X.

(d) Return line to fill and drain pump, line No. 219.

Note: These steam trace lines empty into a tile drain, underground. Positive flow can be established by temperature only.

(5) Turn the heater switch (inside the instrument hutment) to "on" position.

(6) Check the temperature of the strip heaters to assure proper operation.

c. Shutdown: This system is to be shutdown when the temperature rises above 32°F, even if shutdowns occur daily. Shut down by closing the steam supply valve.

Spray Towers

1. Air-Conditioning Tower

a. Description: The inlet and exit lines at the air-conditioner cooling tower are steam traced.

b. Operation:

(1) Open Valve No. 3, the main supply valve for the spray towers.

(2) Open valve No. 5 (overhead, southwest corner of tower).

(3) Check the crimped ends of the two steam trace lines for steam flow.

c. Shutdown: This system is to be shut down when the temperature rises above 32°F, even if shutdowns occur daily. Shut down by closing the steam supply valve.

2. Pool Secondary-Loop Spray-Tower

a. Description: The secondary-loop spray-tower area consists of the tower, the sump, and the pump. Steam trace lines are installed around the fill line (No. 409), the make-up line (No. 446), and the pump suction and discharge (No. 226).

It is anticipated that some ice may form on the inlet air baffles at the spray tower during extremely cold weather. In the event that this should happen, it may become necessary to either partly close the inlet with tarpaulins or bypass the spray tower.

b. Operation:

(1) Open steam valves No. 6 and No. 7 located at the southeast corner of the spray tower.

(2) Check the ends of steam trace lines for temperature and flow (4 crimped ends).

(3) During extreme cold (25°F or less), check the inlet air baffles for ice formation.

c. Shutdown: This system is to be shut down when the temperature rises above 32°F, even if shutdowns occur daily. Shut down by closing the steam supply valve.

3. Reactor Secondary-Loop Cooling Tower, Figure 5.17.

a. Description: This system consists of the reactor tower and pump house. The steam line follows HB-6 flight tube past the heat exchangers and turns toward the secondary pump house where it enters the building at the southwest corner. The line follows the west wall and leaves the building at the northwest corner. It then parallels the west side of the tower. Trace lines branch to the following components: the bypass line, the manual and automatic fill lines, the risers, and the safety shower.

b. Operation: Valve No. 1, located just outside the northwest corner of the pumphouse is normally open.

(1) Open valve No. 2 located inside the pumphouse where the line leaves the building at the northwest corner.

(2) Check the ends of the steam trace lines for temperature and flow.

(3) During extreme cold (25°F or less), check the inlet air baffles for ice formation.

c. Shutdown: This system is to be shut down when the temperature rises above 32°F, even if shutdowns occur daily. Shut down by closing Valve No. 2.

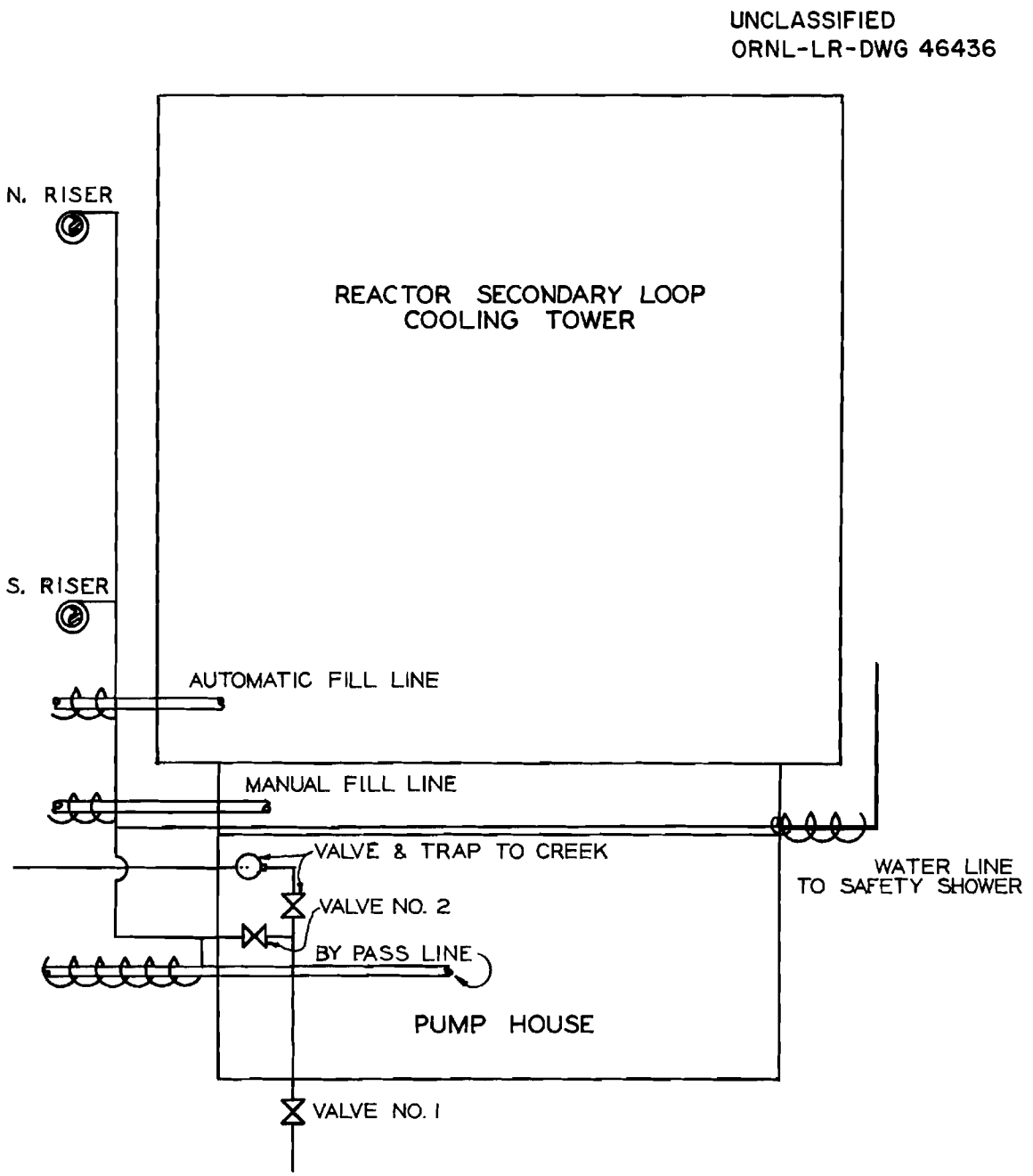

Fig. 5.17. Steam Tracing for Reactor Secondary Loop Cooling Tower

Reactor Heat Exchangers (Ref. D-37564)

1. Primary Side

a. Description: The main 2-in. steam line comes in overhead on the south side of the pit, through a 2-in. valve (MB-1) and into a 1-in. line which branches into the insulation on the west end of each exchanger. The main steam line terminates at the valves (SS-1 and 2) to the secondary steam headers.

The individual heat exchanger steam line splits three ways after passing through a valve (PS 1, 2, 3, or 4) and entering the insulation. One branch goes in east-west zigzags around the north side of the exchanger, ending at the steam trap on the southeast side. A second branch goes directly to the secondary exit tube header, then around the east primary inlet line to the southeast side steam trap. The third branch goes in east-west zigzags around the south side of the exchanger, around the primary exit line, and to a steam trap shared with another exchanger.

b. Operation:

(1) Open the main steam line valves (MS-1 and MS-2) to the main steam trap just below. Proceed when steam reaches trap.

(2) Open the steam valve (PS-1, 2, 3, and 4) to each heat exchanger and close or open the steam valves (SS-1 and 2) to the secondary as necessary.

(3) Observe, by feel, the operation of steam traps on the southeast sides of the exchangers (Nos. 1, 3, 5, and 7)

and on the west sides of the exchangers (Nos. 9 and 10) to make sure that there are no stoppages of the steam.

2. Secondary Side

a. Description: The 1-in. line that feeds the primary side of the heat exchangers terminates in a tee at the north top of the pit; each branch has a valve (SS-1 or 2) which allows flow to either inlet (east) or exit (west) secondary coolant steam headers. These inlet/exit headers in turn have one valve (SS-3 or 4) which feeds steam to the trace on the 16-in. inlet/exit line outside the pit where it bends and enters the ground.

The other five lines from the header are 1/2-in. copper tubes, which run down the main 16-in. secondary line. One tube per exchanger goes to the steam trap on the northeast side of the exchanger, after winding around the individual 10-in. inlet/exit line and cut-off valve. The fifth line terminates in the steam trap (No. 2) of the south heat exchanger.

b. Operation:

(1) Open the main steam line valve (MS-1) and the main steam trap valve (MS-2), just below it. As soon as the steam reaches the trap, continue.

(2) Open or close the individual valves (PS-1, 2, 3, and 4) to the four heat exchanger primary systems as necessary; open the two valves (SS-1 and 2) to the secondary lines.

(3) Open the two valves (SS-3 and 4) to the secondary steam traces.

(4) Observe, by feel, the operation of the steam traps on the northeast side (Nos. 2, 4, 6, and 8) of the exchangers to make sure there are no stoppages of the steam.

Scrubber System

1. Description: The main steam line comes in overhead from the stack area, with a downcomer, valve CSS-4, and trap outside the building on the south wall. The steam line enters the building and feeds into 6 lines at valves CSS-1, 2, 3, and 5. CSS-1, 2, and 3 allow steam to enter various copper tubings around the insulated caustic and process water lines inside the scrubber shack and also around the underground 5% NaOH tank external to the building. CSS-5 allows steam to enter an uninsulated pipe which runs on top of the wall to the area north and outside of the building, through valve CSS-6 to the external above-ground caustic (50% NaOH) storage tank and associated piping. Valve CSS-7 allows steam to flow into a garden hose fitting for cleanup inside the pump house.
2. Procedure: After checking that the steam plant has turned steam on to the scrubber shack, open valves CSS-1 to 6. CSS-7 is turned on as necessary. The system is turned on with the first freezing weather, and checked once each shift.
3. Shutdown: This system is to be left in operation continuously during the winter months. A shutdown date is determined by day supervision.

5.9c. Water Activity Readings, Scintillation Counter

The various water systems in the Reactor Operations Department are sampled on a routine basis for the purpose of making radioactivity measurements. These measurements are made by utilizing a well-type scintillation counter with an aluminum absorber. The counter is located in the counting room in the basement of Building 3042.

To insure accurate sample measurements, it is important to keep the well free from contamination and to maintain an accurate record on the background and calibration factor. A clip-board has been placed on the front of the counter for the purpose of recording the date, background, and calibration factor when taking each set of measurements. This will allow the operator to have a record of the previous data. Should the background increase appreciably above the previous readings, there is a possibility that the counter-well may have become contaminated. If so, it should be decontaminated immediately. In most cases, a piece of damp cheese-cloth will be sufficient for decontaminating the well.

To insure the counter-well from becoming contaminated, the scintillation sample tubes should be cleaned with facial tissue before being placed in the well for counting. A box of facial tissue will be kept at the counter for this purpose. If decontamination of the well doesn't correct the condition, the counter should be checked for possible instrument trouble. The background counts for a given measurement should not vary more than $\pm$ 7 1/2% from the average of the previous five measurements.

The operation of the counter is on a routine schedule and consists of calibrating the counter, inserting the sample of water, counting the sample, and adjusting the results by using the calibration factor. Each of these phases will be discussed in detail.

Voltage Adjustments

Under normal circumstances the power to the equipment will always remain on. This is to insure stablization of the high voltage supply. Normally, the equipment will not require adjustments, except for perhaps a monthly high voltage adjustment to insure that operation is within the plateau region of the counter.

This plateau region will be determined by supervisory personnel on a monthly basis. The method of plateau determination will be to take a series of one-minute counts at various high voltage settings. A curve of cpm vs voltage can then be plotted and the plateau will be the flat part of the curve. The high voltage should be set midway on the plateau.

Then turning the power on:

1. Turn the Super-stable H.V. power supply to + H.V.
2. Increase the high voltage control slowly, starting at position A, until the desired level is obtained.
3. The desired operating voltage will be determined in the manner described above.

Calibration

As is the case for all types of counting equipment, this unit must be calibrated to give an absolute measurement. This is accomplished by using the cesium source, with a calibration supplied by the Analytical Chemistry Group, as a standard.

To determine the calibration factor:

1. Insert the cesium standard into the counter-well.
2. Replace the lead plug which shields out excessive background counts.

3. Reset the timer; reset the total count register.
4. Take a one-minute count, by using the counter "on-off" switch.
5. Record data. The total count register may be set on any one of the scales (16, 64, 256 or 1024); and, to obtain total count, the register count must be multiplied by the scale, and the light count added.
6. Remove the cesium standard; replace the lead plug.
7. Reset the timer; reset the total count register.
8. Take a one-minute count for general background.
9. Record the data and obtain the counts per minute by multiplying the total counts on the register by the scale and then adding the number of lights.
10. The total count obtained in Step No. 9 is due to background and should be subtracted from the number obtained in Step No. 5 to give the net counts due to the cesium standard.
11. The current value of the standard is obtained by taking the decay factor and multiplying it by the initial value of the standard as indicated on the standard for aluminum absorber.
12. After the current value has been determined, it should be divided by the net count obtained in Step No. 10. This will give the calibration factor to be used.

Sampling

In preparing the water samples for counting, observe the following procedures:

1. Using the scintillation sample tube, place 1 ml of water in the tube.

2. Place a cork stopper in the tube.
3. Label each tube to insure proper identification of samples.
4. Dry each sample tube with facial tissue before placing it in the counter-well.
5. Observe the following sample decay time on the various water systems.
   a. LITR and ORR water samples, twenty minutes.
   b. OGR, Hole-51 water samples, five minutes. (See OGR Manual of Operations)
   c. The Graphite Reactor Canal, filter house seal-tank, and retention pond water samples require no specific delay or decay time prior to counting.

Counting

The scintillation counter is located in the counting room in the basement of Building 3042. The method of operation for counting a sample is as follows:

1. Determine the calibration factor.
2. Insert the sample into the well of the counter.
3. Reset the timer; reset the total count register.
4. Turn on the counter and count for one minute.
5. Subtract the background count, which is posted on the scaler, from counts obtained in Step No. 4.
6. The count obtained in Step No. 5 should be multiplied by the calibration factor, which is posted on the scaler, to give the c/m/ml.
7. The results should be posted in their respective places; clipboard, log book, etc.

1963

6. SPECIAL PROCEDURES

6.1. Pertaining to the Reactor

Reference

D-24664

6.1a. Checking Chambers with a Source

Startup of a reactor should not be initiated until its neutron detection instruments have been checked for operability, by exposure to a neutron source, and a source of background neutrons has been established against which comparison measurements can be made as neutron production increases.

The ORR has three such sources of background neutrons, each dependent on the gamma-neutron reaction for production. One is a specially prepared antimony-beryllium source, located in core position G-1. This source is constantly being irradiated to its saturation level as the reactor operates and, therefore, is continuously emitting neutrons to its fullest capability. The second is from the fission products and other gamma-emitting radioisotopes present in the fuel, shim rods, experiments, and reactor components as these emitted gamma radiations react with the beryllium reflector in the reactor to produce neutrons. The level of neutron output is dependent upon the age of the fuel, the amount of beryllium present, and the length of time the reactor has been shut down, permitting the gamma-emitting radioisotopes to decay. The third source of neutrons uses the same sources of gamma radiations but depends on their reaction with the deuterium present in the natural water coolant and moderator for the production of neutrons. The quantity of neutrons produced is dependent on the

age of the fuel, the length of time the reactor has been shut down, permitting the gamma-emitting radioisotopes to decay, and the amount of water around the sources of gamma radiations.

The supply of background neutrons is sufficient to activate both the fission chamber, the ORR's most sensitive detector, and the servo chamber.

The supply of background neutrons is not sufficient to activate the Log-N chambers, used for operation of the reactor at accountable power levels, to the level where they respond on the recorders. However, if need be, either Log-N chamber could be activated to the recording level by the removal of the antimony-beryllium source from its usual location in core position G-1 to a position directly in contact with the chamber to be tested.

Before placing a neutron detection chamber, either new or repaired, in the control system, it must be checked for response to neutrons. The checking is done either by exposure to a known value of neutrons from a specially prepared source or by exposure in an operating reactor where its performance can be checked against that of an operating chamber known to be valid. In the latter case, under no condition is the chamber under test to be tied into the control system.

6.1b. Precautions to be Used in the ORR Pool

It is important that operators realize the hazards associated with damaging the pool liner. If it were ruptured, water would flow around the inlet and exit water lines, bottom plug liner, and other lines which go through the concrete into the pool. Experience with concrete-aluminum corrosion indicates that this might cause some of the most important water

lines to corrode through. If this should happen with a line carrying 40-psi-pressure, the water might be pumped between the concrete and the pool liner causing it to balloon out into the pool. The core drilling which has been done might provide drainage for the water in such an event, but it is obvious that every precaution must be taken against such an occurrence.

Grating and plates have been installed at the bottom of the pool; and, except at times when personnel must work on the pool bottom, the grating will be kept on the 14-ft level. The main purpose of the grating is to protect the aluminum lining from puncture by any item which might be dropped into the pool. Every precaution must be taken to insure that heavy tools or other objects which might cut through the lining are not dropped into the pool.

Before heavy shields are suspended over the pool, make certain that they cannot drop or swing in such a manner as to damage the lining. In general, use of the pools should be kept at a minimum. Only fuel and the experiment equipment which is absolutely necessary should be put into them.

6.1c. Large Facility Leak-Detector System

The term "large facility" refers to the north and south facilities. As a part of the large facilities, between the large diameter liner imbedded in the concrete shield and the 18 x 24-in. obround section which enters the reactor tank and faces against a core face, there is a transition section known as the "dished head" of the facility. This transition piece is welded to the 18 x 24-in. obround section in the tank and is bolted to the embedded liner near the pool wall. In order to insure an

adequate seal against water leakage at this bolted connection, there is an aluminum "O" ring between the flange on the dished head and that on the insert where the fasteners are located. Since the existance of the "O" ring causes a space to exist between the two sections, an aluminum plate has been welded around the internal portion of that space. This gives the facility the appearance, when viewed internally, of being smooth and free of mechanical joints.

Referring to Figure 6.1. it can be seen that there are spaces between the welded plate and the "O" ring, and the "O" ring and the apex of the "V" groove into which the "O" ring seats. Since water entering these spaces would remain stagnant, there is a definite possibility of serious corrosion taking place.

In order to eliminate this possibility and to detect any leaks before they became serious, the flow system shown in Figure 6.1. was installed. This system forces an air stream through the spaces mentioned above and exhausts the air and any entrapped water into the atmosphere. The lines and valves are located on the north side of the reactor balcony at the east end.

Glass tubes containing Dri-Rite have been attached to the ends of the exhaust lines. This material experiences a color change when exposed to moisture. Therefore, a change in color of the Dri-Rite will indicate the removal of water from the spaces of the flanged joint. Once such a change takes place, further tests will be performed to obtain more specific information.

ORNL-LR-DWG. 51020
UNCLASSIFIED

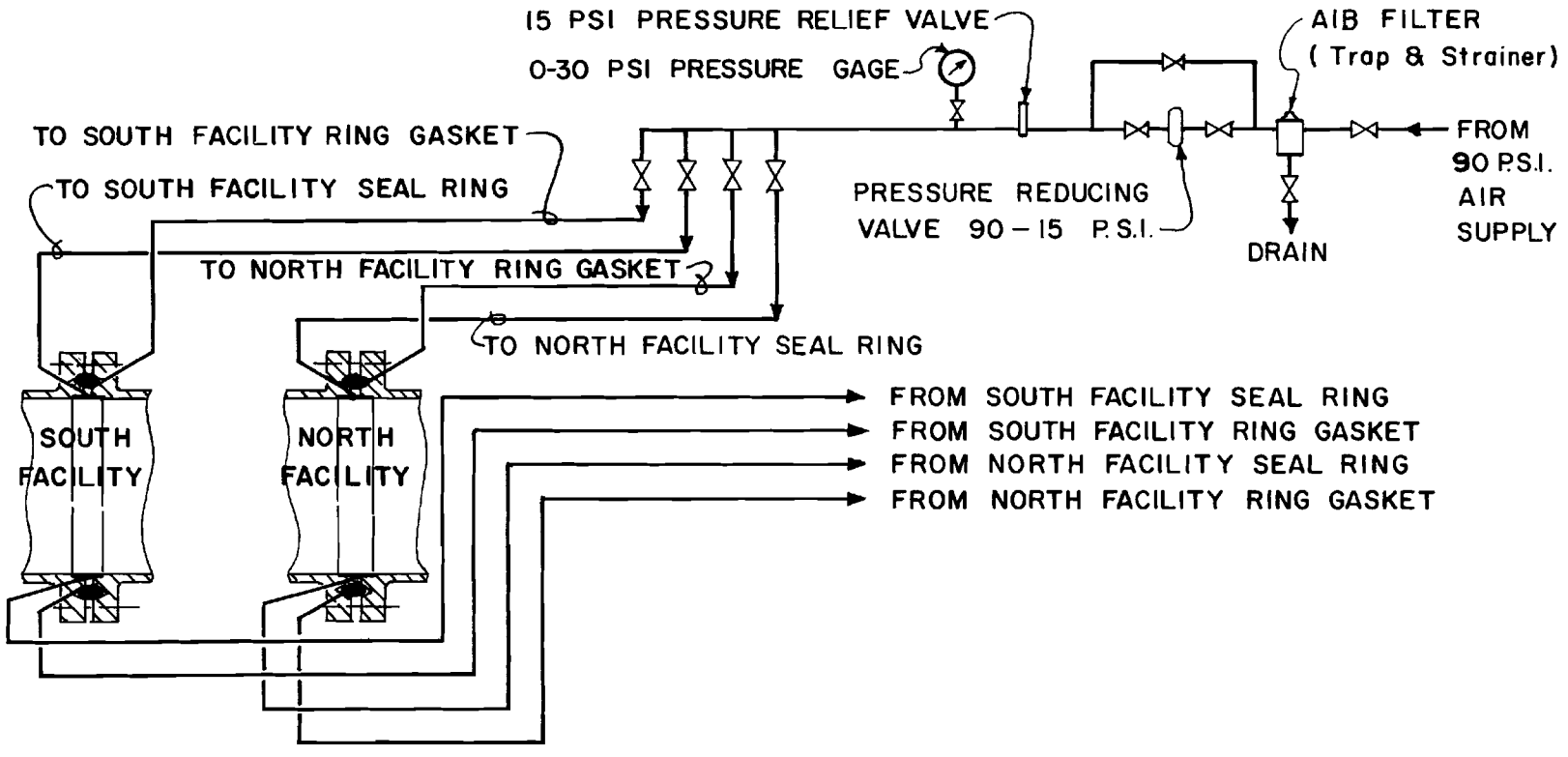

Fig. 6.1. Large Facility Leak Detector System

6.1d. Dispersion of N^{16} Around the Reactor

During the design of the ORR, there was considerable concern about the formation of the radioisotope N^{16} in the reactor pool adjacent to the reactor. Radiation readings of $\sim$ 20 R have been obtained from N^{16}-bearing water on the exit water line from the reactor core. N^{16} has a half-life of 7 seconds, but it was feared that the natural convection around the reactor would move the hot gas to the pool surface before it could decay sufficiently to be harmless. Sufficient delay was accomplished by a system of jets which directed approximately 140 gpm of pool return cooling water downward along the outside of the reactor tank wall as shown in Figure 6.2.

Another source of relatively high N^{16} activity was at the reactor pool side. The delay here was accomplished by installing a jet eductor, Figure 6.3, and using 140 gpm of the pool return cooling water to provide a suction at the pool side. The N^{16} bearing water is pulled down by the suction and dispersed into the reactor pool. With both systems in operation, the radiation level is only about 8 mr/hr at the pool surface.

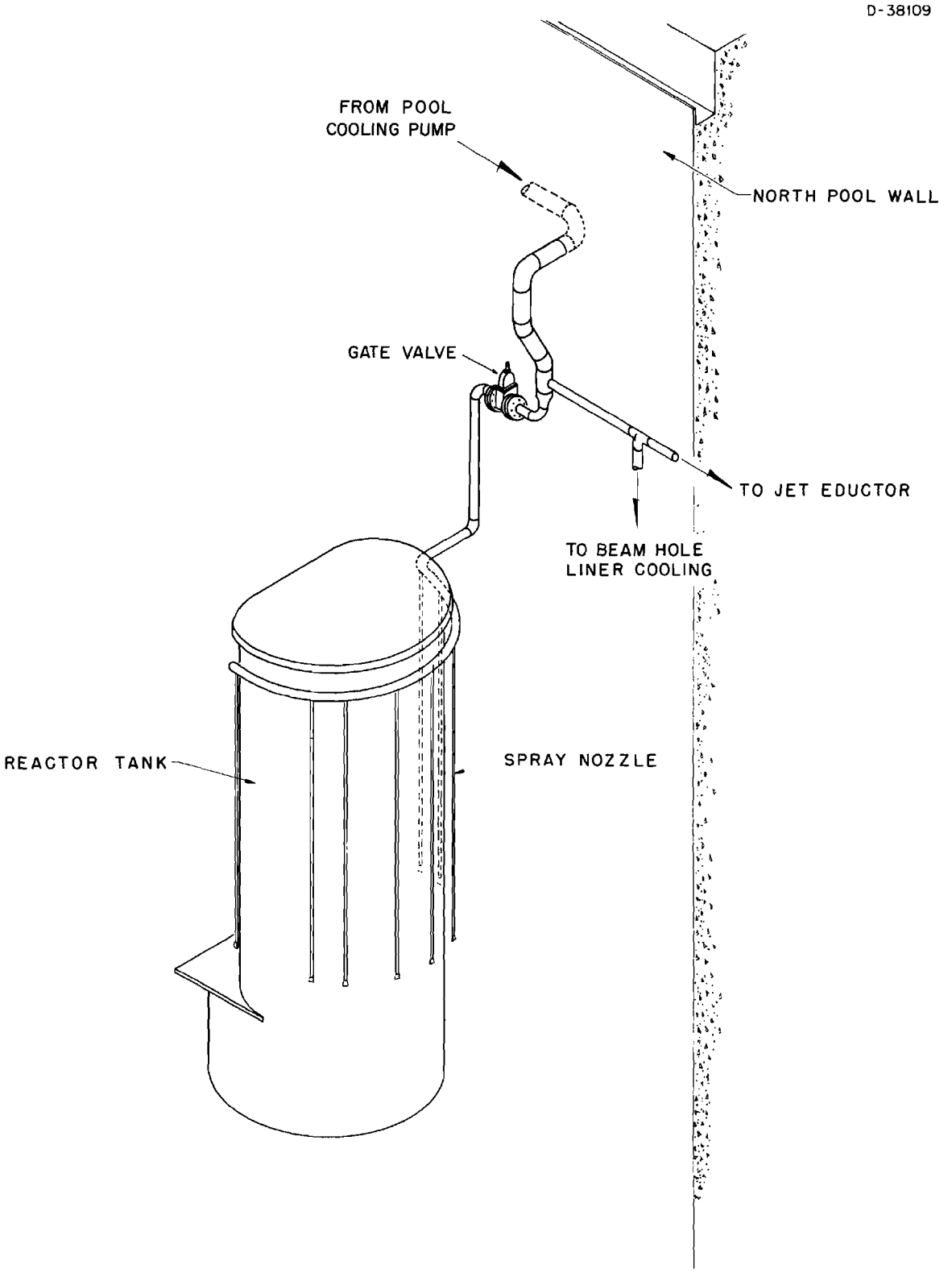

Fig. 6.2. N^{16} Dispersion

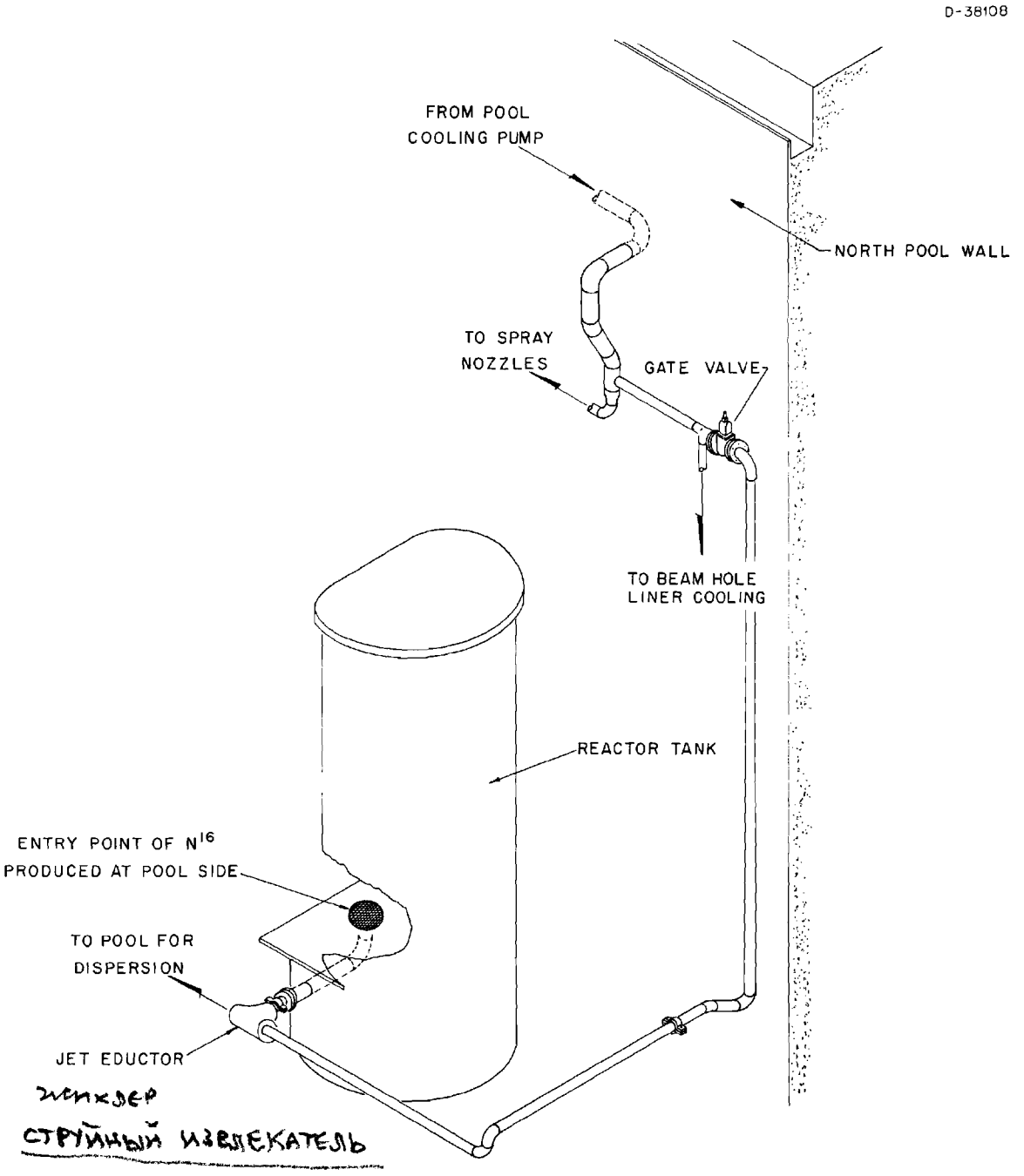

Fig. 6.3. N^{16} Dispersion — Pool Side

6.2. Building 3042

References

Dwgs. ORNL D-22303, D-22305, D-22306, D-22307, D-22309

6.2a. Operation of the Pneumatic Doors

The large, pneumatically operated doors at the east and west sides of Building 3042 are, in addition to being access doors, an integral part of the containment features of the building. In the event of a major catastrophy at the ORR, one which requires operation of the ORR Air Decontamination Scrubber, these doors would automatically close upon the starting of the scrubber. It is, therefore, imperative that Operations Division personnel acquaint themselves with the following operating procedures:

1. Procedure for Opening the Doors
   a. Unlock the control box and lift the flap cover over the controls for the door which is to be opened.
   b. Hold the personnel door next to the large doors open for 15 to 30 seconds to relieve the negative pressure induced in the building by the overhead fans.
   c. Check to see that there are no obstructions which would be struck by the doors while they are opening.
   d. Press the "open" button (press and release instantly).
   e. Relock the controls. This is to assure that the operation of the doors will be done by Operations Division personnel only.

   NOTE: At no time will obstructions be left in the path of the doors. This also includes vehicles.

2. Procedure for Closing the Doors

a. Unlock the controls.

b. Check to see that the door is unobstructed. This includes being certain that there is no large accumulation of rocks and/or dirt near the door's framework.

c. Press the "close" button.

d. Relock the controls.

During the opening and closing of the doors, be attentive to any unusual moises or operating behavior of the doors. If there are any, report them to the ORR Shift Supervisor or the Reactor Supervisor.

6.2b. The ORR Heating, Air Conditioning, and Ventilating System

References

Dwgs. ORNL D-22303R1, D-22304, D-22305R1, D-22306R1, D-22307R1, D-22308, D-22309, D-22336R1, D-22338

Description and Function

The ORR building air-handling and conditioning system, as designed, considered the basement as a separate, self-contained unit with its own heated, fresh air supply and exhaust systems of equal capacity. The remainder of the building's systems were designed to provide approximately 13,810 cfm of fresh air; 14,000 cfm of exhaust air, and 20,600 cfm of recirculated air for a total handling capacity of approximately 34,000 cfm. Air exhaust was handled by the operation of two roof fans with a total capacity of 14,000 cfm. These design flows are compared with those resulting from present operation under modified conditions in Table 6.1.

The two most significant changes in the design conditions were (1) the change to continuous operation of the 6400-cfm "emergency" system (originally rated at 5000 cfm) from its original status of operation only upon activation as the result of high air activity with the accompanying shutdown of all other ventilation components and (2) the use of a third roof exhaust fan of higher capacity (16,000 cfm) than the two formerly in use.

The use of the "emergency" system for continuous operation, instead of "on command" by a high radiation signal, was necessitated by the requirement for cell ventilation for experiment equipment cubicles and the hot cells at the west end of the ORR pool. This change increased the fresh-air flow to a calculated 20,210 cfm and the exhaust-air flow to a calculated 20,400 cfm. These flow rates were calculated based on designed air handling capabilities of the units.

The use of the third roof exhaust fan has resulted in the system becoming an essentially 100% fresh-air system. Calculated fresh-air and exhaust-air flows based on design air handling capabilities of the units are considered to be rough approximations, but both were calculated to be around 27,000 cfm. To determine the effect of this fan, it was shut off; with the result that the building vacuum suffered a measurable decrease of 33 - 43%, measured in inches of water. The same loss in building vacuum was obtained by repeating the test with one of the two fans which had been in operation both during and since the time the system was still within the original design conditions.

Table 6.1. Roof Fan Capacities

	As Designed	Using Emergency System[1]	Using Emergency System[1,2] and Additional Roof Fan
Fresh Air	13,810	20,210	27,000
Exhaust	14,000	20,400	27,000
Recirculated	20,600	14,230	0

[1]Calculated on basis of design air handling capabilities of individual units

[2]Flows considered to be only rough approximations.

The ORR Building (Building 3042) has four working levels as follows: a full basement with working area of 11,400 square feet, a first floor with working area of 9500 square feet, a second floor with working area of 3000 square feet, and a third floor with working area of 6880 square feet. The difference in usable square feet per floor area from that contained by the building dimensions is taken up by the reactor pool, hot cells, and high bay area of empty space which extends from the building ceiling to the first floor, permitting unimpeded use of the bridge crane to service experimental areas located at the beam holes at the east end of the reactor pool. As a fire control measure, the basement can be isolated from the floors above it by a hatch cover in its ceiling, by fire walls around the stair wells, and fire resistant doors which give access to the area. Air is removed from the building through 6 exhaust fans installed in the building roof, only 3 of which are in normal use, and the "emergency" ventilation system which is in constant operation.

Emergency Ventilation System

This system, which is in constant operation, consists of ducting and

appropriate air intake registers, eventually leaving the building near the ceiling level of the basement and proceeding in a southerly direction underground until it makes connection through a filter and scrubber system with a main duct leading through an exhaust fan to the central contaminated-air-exhaust stack (3039). The present capacity of the system is 6400 cfm. The duct work extends from just under the ceiling level of the west end of the basement, where there is an intake register with capacity of 1000 cfm, vertically up the west wall of the building to roof level with intake registers of 500 cfm capacity each on the first level and second level. At the roof level, the duct proceeds horizontally eastward to the east wall of the building and has 5 intake registers, each with capacity of 500 cfm. The duct drops vertically at the east wall to a horizontal run southward under the basement ceiling to its exit from the building. At the first level, the east wall duct has an intake register with capacity of 1000 cfm.

Air Decontamination System

In connection with the "emergency" ventilation system ducting, there is a filtering and scrubbing system. This system is for the decontamination of radioactivity contaminated air before expulsion to the atmosphere through the 3039 stack and can be placed in service manually or automatically. When the air decontamination scrubber is put into service, either manually, by the SB switch mounted on a building column south of the operating console in the control room or by the remote control switch at the southwest corner of Building 3038, or automatically, by excitement of the monitor mounted outside the control room, all the building heating, cooling, ventilating, and exhaust systems are automatically stopped and their

respective intake and exit louvers are closed to make the building virtually airtight, with the exception of the "emergency" ventilation system. In this situation, air is removed from the building only by the "emergency" ventilation system via the now activated scrubber. The building is held under a slight negative pressure in this manner.

When normal operation can be resumed following the use of the scrubber system other than in the "test" mode, all heating, cooling, exhaust, and ventilation systems must be manually started to regain operation of the blowers and the louvers. The Trane Centravac Refrigeration System will not be affected by the operation of the scrubber system; however, following a normal power failure or manual shutdown, it is necessary to manually restart the system. Manual restart is accomplished by operating the "start" buttons in the four push-button stations located in the emergency diesel generator room near the panel marked Time Delay Control Panel. Following the restart of the Trane Centravac System, the No. 1, 2, and 3 heating and ventilating units, the chilled water pump, and the No. 1 and 6 exhaust fans will all start automatically and in a sequence which depends upon temperature and time delay relays.

The Heating and Ventilation of the Basement

The basement is heated by a forced draft unit with steam-fed heating coils and a design specification capacity of 12,000 cfm. This unit also has automatically controlled pneumatic-operated inlet and exit dampers. The unit is located near the basement ceiling on the south wall. The fresh-air intake for the unit is a single metal stack located outside on the south side of the building. The switch for the power to this unit (HU-3) is located under the unit on the south wall. An alternate switch

is located on the first floor among the electrical controls west of the south personnel door and is also labeled HU-3.

The air from the basement is exhausted through a vertical tunnel located in the northeast corner approximately 10 feet above the basement floor. The switch for the exhaust fan (RE-4) is located on the south wall under the basement heating unit HU-3. An alternate switch is located on the first floor among the electrical controls west of the south personnel doors and is also labeled RE-4.

The sub-pile room, located at the east end of the basement under the reactor pool, is ventilated by a 217-cfm fan which draws air into the closed room through fiber filters and exhausts it into the north side of the basement.

The heating and ventilation system of the laboratory and counting rooms located in the northwest corner of the basement includes air conditioning facilities in both rooms. The units supplying these rooms can supply heat as well as cold. The unit servicing the counting room is backed-up by a booster fan served by a duct from the fresh-air intake to the No. 2 heating and ventilation unit to maintain this room at a positive pressure with respect to the rest of the building. These units and the booster fan must be started manually as follows: for the counting room, either of two switches prominently located on the west wall of the room; for the booster fan, a switch painted blue, also located on the west wall of the room; and for the laboratory, by either of two switches, one on the west wall of the room and one on the south wall of the room by the door. In the event of a building ventilation shutdown, it is necessary that these units be restarted as soon as possible to prevent equipment damage from overheating.

The laboratory air is exhausted both by hood fans, serving two laboratory hoods through an exhaust duct which passes directly through the building roof to the atmosphere, and by natural air movement through a hole in the laboratory room ceiling to the building basement. The laboratory hood exhaust fans are controlled by switches located on the lower sections of the hoods. These must also be reactivated after a building ventilation shutdown.

The Heating, Cooling, and Ventilation of the First Floor

The heating, cooling, and ventilation of the rooms and open area of the first floor is accomplished by the No. 1 and 2 air conditioning and ventilating units located on this floor, each of which have capacities of 15,600 cfm. These units are supplied with chilled water and steam to their coils. They are thermostatically controlled with automatically controlled inlet and recirculating dampers. The fresh-air inlets are located above and adjacent to the south and north personnel doors. Each unit has ducting, equipped with defusers, which runs east and west from the unit on its side of the building. Each unit is equipped with American Air Filters for dust particle removal. The No. 1 unit is located near the south wall of the building with its power switch labeled H&V No. 1, located near the south personnel door. The No. 2 unit is located near the north wall of the building with its power switch labeled H&V No. 2, located on the north wall near the north personnel door.

Heating, Cooling, and Ventilation of the Second Floor

The heating, cooling, and ventilation of the second floor open area and open area of the rest of the building not served by the first floor units is accomplished by the air conditioning and ventilating unit No. 3.

This unit has a design specification capacity of 61,200 cfm. It is served by both chilled water and steam to its coils. It has automatically-controlled, pneumatically-operated inlet dampers. The fresh-air intake is by way of 3 metal stacks located outside the building at the southeast corner. The intake air is filtered through American Air Filter mats. The power switch to the unit is labeled K-8 and is located on the north wall of the unit room.

The laboratories and offices of the second level north and south contain individual type heating and cooling units equipped with coils supplied by chilled water and steam. These units are thermostatically controlled and have automatically operated dampers controlling the amount of recirculated air from the room or fresh make-up air from the open area of the building outside the room. An exception to this type of cooling is Room 212, which is equipped only with an exhaust fan exhausting to the open area of the second floor.

The second floor change room is heated by an individual forced draft unit having steam coils. This unit has automatically operated dampers and is thermostatically controlled. It utilizes either recirculated air from the room or fresh air from the outside through an intake on the west wall of the building at the unit. Air is removed from the room to the outside of the building by two thermostatically controlled exhaust fans in the east wall.

The second floor restrooms are vented through a duct, with air intake registers of 400 cfm each from both the ladies' and the men's restrooms, to an 800-cfm fan which exhausts through the east wall of the change room. The power switch labeled "emergency shut-down toilet vent" is located on

a column just outside the entrance to the restrooms and must be reactivated after a shutdown of the building ventilation system.

Heating, Cooling, and Ventilation of the Third Floor

The control room and offices of the north side of the third level are heated, cooled, and ventilated by an air conditioning unit located in the northeast corner. This unit has a design specification capacity of 4461 cfm, is equipped with its own refrigeration system as well as steam to its coils, is thermostatically controlled, and has automatic, pneumatically-controlled inlet and return air dampers. Its fresh-air intake is located in the north wall of the building at the unit. The power control switch labeled "A/C Unit" is on the east wall of the building near the unit.

The south section of the third floor consists of laboratories and offices which contain individual heating and cooling units. Each unit, equipped with coils supplied with chilled water and steam, is thermostatically controlled and has automatically operated dampers for either recirculation of room air or make-up with fresh air from the open area of the third level, similar to those on the second level. Exceptions are Rooms 306 and 308 which now have window-type air conditioners exhausting to the open area of the third floor in addition to the previously described unit which is located in the open area outside of Room 310 but whose output is ducted with appropriate diffusers to Room 310, now a single unit with Rooms 306 and 308.

The laboratories have individual roof vents, the openings of which are pneumatically-operated and controlled by a power switch labeled "emergency shutdown lab vent" located on a building column opposite Room 302. This switch must be reactivated after a shutdown of the building ventilation system.

The third floor change room is heated and ventilated by a thermostatically controlled system which is identical to that of the second floor change room in operation and location.

Exhausting Air From the Building Open Area

The air of the first, second, and third floors, and the open area which extends to the building roof is exhausted by six roof exhaust fans in addition to the Emergency Ventilation System previously described. The two of these fans, No. 1 and 6, have capacities of 7000 cfm each and can be operated either in the manual or automatic mode. The remaining four exhaust fans have capacities of 16,000 cfm each and are manually operated. At present, only exhaust fan No. 3 is occasionally called upon to assist fans 1 and 6 to maintain the required building negative pressure. Fans 1 and 6 are currently operated in the automatic mode in conjunction with the building ventilation system. All of these fans are equipped with pneumatically-operated, automatically-controlled dampers.

Setting of Dampers for Air Conditioning and Ventilation Units No. 1 and 2

Occasionally, it may be necessary to check and adjust dampers on air conditioning and ventilating units 1 and 2 during hot weather to regulate the make-up air. The adjustment procedure is:

1. Measure the temperature of the return air at the grill of each unit using a non-mercury thermometer.
2. Measure the outside temperature.
3. Determine the "adjusting factor" using the following relationship:

   ΔT (T at 2 - T at 1) x 0.2828
4. Adjust the damper until the temperature of the mixed air (before it crosses the cooling coils) is the sum of $T_1 + T_3$.

Manual Reset Summary

A summary of the building heating, cooling, and ventilation systems which must be reset manually, following a shutdown of the building ventilation systems for whatever reason and after approval for normal operation has been obtained, is as follows:

1. Basement:

   Heating Unit No. 3 (HU-3), exhaust fan (RE-4), air conditioning and ventilation unit No. 3 (switch K-8), laboratory and counting room air conditioners (2), counting room booster fan, and laboratory hood fans.

2. First Floor:

   Air conditioning and ventilating units 1 and 2 (H and V No. 1, H and V No. 2) and the roof exhaust fans which are to be operated. Fans 1 and 6 are always to be turned on unless otherwise notified.

3. Second Floor:

   Emergency shutdown toilet vent.

4. Third Floor:

   Air conditioner unit No. 2 and emergency shutdown lab. vent.

In the event of a power failure, the above units will all have to be reset in addition to the Trane Centravac Refrigeration System and the change rooms' heating units on the second and third levels.

6.2c. Pressurizable Off-Gas System

References: Q-1594E-1, Q-1594E-2, Q-1594E-3, Q-1594E-4, Q-1594E-5, Q-1594E-6, C-511C7, C-53821, D-50469, D-39095, D-39101, D-39102, D-39103, D-39104, D-39106, D-42727, D-42728, D-43148, D-44827, D-46910

Purpose

The pressurizable off-gas system was installed for use by experiments which will operate at greater than atmospheric pressure and with a large air supply; that is, the system will provide a high suction, low-flow exhaust of 500 scfm at minus 40-in. H_2O for gases discharged from experiments which may pressurize the off-gas system if downstream stoppage occurs.

Description

The system is comprised of several exhaust points around the reactor pool for experiment tie-in. The main exhaust line for these access points begins at approximately the midsection of the reactor pool on the north side and continues eastward along the north wall of the reactor pool, south across the east wall, and then west along the south wall of the three pools and penetrating the west pool wall through thimble T-23 on the second level. Here, the line is encased in 4 in. of lead shielding as it turns downward through the floor and then penetrates the ORR building wall on the first level east, approximately 5 ft underground. The main line then continues (as depicted in Figure 6.4) to the filter pit just east of the ORR emergency scrubber building.

The main line is joined, prior to reaching the filter pit, by an 8-in. branch line on the south side of the ORR building. This branch line penetrates the south wall of the ORR building near the 24-in. cell ventilation duct, basement level, just above the B-9 experiment cubicle. It then continues to the GCR Loop II equipment cell in the basement, through

a charcoal trap, absorber and filter, and up and into the GCR Loop II containment cell for the routine evacuation or dumping of the loop.

After traversing the filters, the off-gas continues through a 10-in. overhead line to a 2000 cfm, 30 h.p., off-gas blower, and is then discharged to the 3039 stack.

There is an interconnecting line between this system and the emergency cell ventilation system on the exit side of the scrubber. The purpose of this line is to supply a sufficient volume of air to prevent the blower from overheating. A check valve and slide valve are installed in the line. The check valve is to prevent a reverse flow into the emergency ventilation system. The slide valve is to regulate the flow through the blower.

The filter pit (Ref. Dwg. D-39095 Rev. 1) consists of two banks of filters (the north and south banks) separated by a 24-in. x 11-in. air duct. This air duct and the bank interconnection valves allows the use of the filter banks either individually, in parallel, or in series. Normal operation shall be the individual use of either the north or the south bank.

Each filter bank is composed of four compartments. The first compartment, the inlet, contains a roughing filter for removal of any particulate matter and also a pair of valves for interconnecting the two banks. The second compartment contains an activated charcoal canister assembly for the removal of fission products, primarily iodine. The third compartment contains an absolute filter. The last compartment contains the exit line and another pair of bank interconnection valves. The first, second and fourth compartments each contain a floor drain, with a float

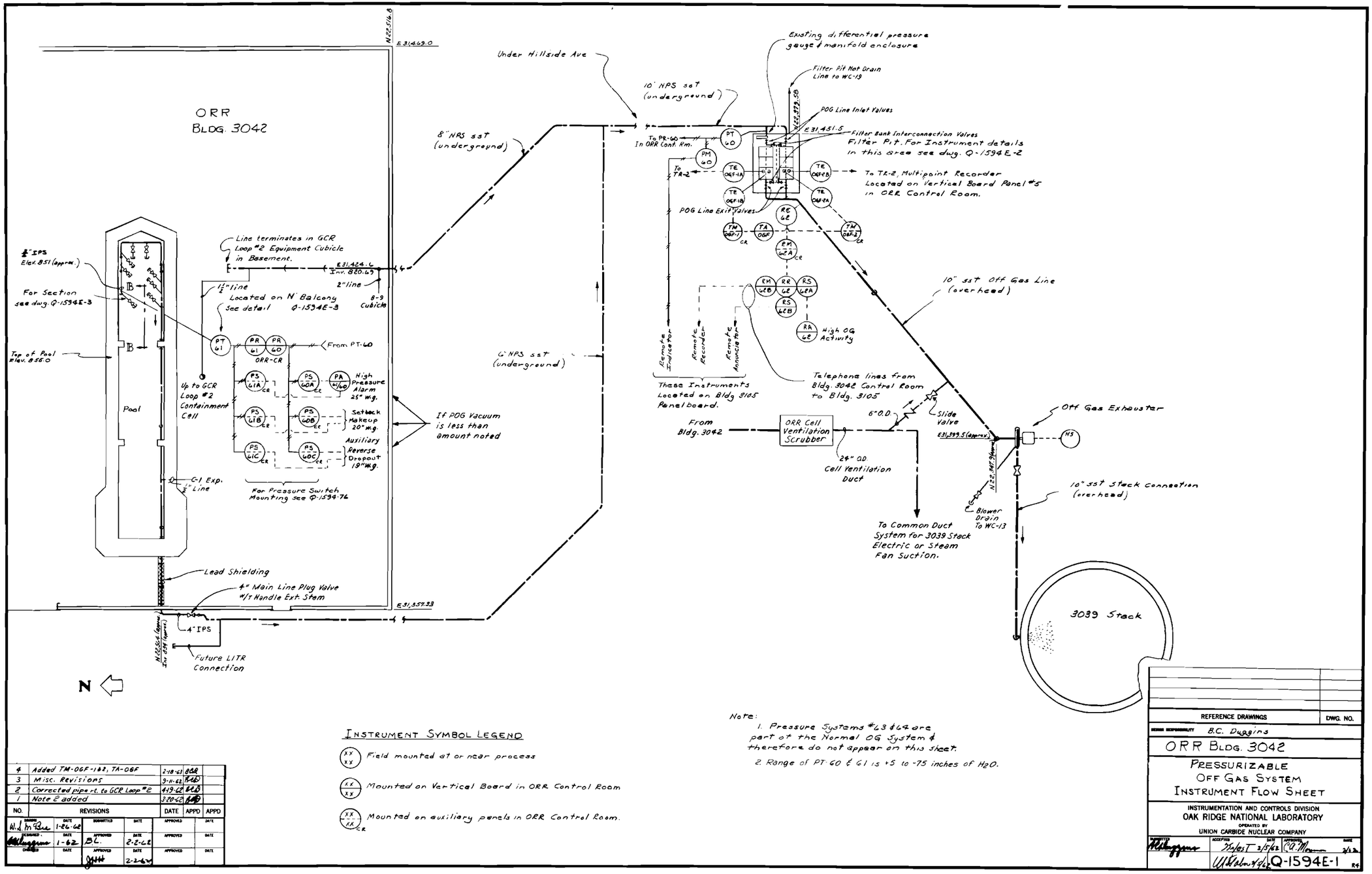

Fig. 6.4. Pressurizable Off-Gas System

trap, which discharges the condensate or water collected from the system to a hot drain line connected to WC-19.

Radiation Instrumentation

An ionization chamber (RE-62) located on top of the exit line from the filter pit, monitors the activity level of the off-gas. The signal is transmitted to the pressurizable off-gas electrometer (RM-62A), located in the ORR control room, and subsequently to the POG radiation recorder (RR-62) located on the vertical-board, panel No. 10, in the ORR control room. Recorder switch RS-62A and subsequently the radiation alarm RA-62 are actuated upon receiving a signal indicating twice the normal radiation background.

A radiation modifier, (RM-62B), an integral part of RR-62, transmits the POG activity level signal to a remote indicator located on a panel-board in Building 3105. RS-62B actuates a remote annunciator also located on a panelboard in Building 3105. The purpose of these instruments is to alert the Patrol Chemical Operators of the high level activity, and the source, which is being discharged into the 3039 stack, so that appropriate action can be taken.

Pressure Instrumentation

A pressure transmitter, PT-60 (located at the filter pit) is connected to the inlet line to the filter pit and transmits its signal to a pressure recorder, PR-60 (red pen), located on vertical-board, panel No. 10, in the ORR control room. Pressure transmitter PT-61 (located on the north balcony) is connected to the 3/4-in. POG line located on the north side of the reactor pool. PT-61 transmits its signal to PR-61 (green pen) also located on vertical-board, panel No. 10, in the ORR control room.

Pressure switches PS-61A, PS-61B, and PS-61C are actuated by PT-61. Pressure switches PS-60A, PS-60B, and PS-60C are actuated by PT-60. These pressure switches are all located in the ORR control room pressure switch cabinet No. 2.

Alarm Signal.--Pressure switch PS-61A is actuated, and subsequently the pressure alarm PA-61, if the POG pressure increases to minus 25-in. H_2O; PS-60A and subsequently PA-60 are also activated if the POG pressure increases to minus 25-in. H_2O.

Setback Signal.--Pressure switch, PS-61B, which actuates switch RS-86, and pressure switch PS-60B, which actuates switch RS-84, are actuated if the POG pressure increases to minus 20-in. H_2O. A setback (makeup) signal will be initiated from either RS-86 or RS-84.

Reverse Signal.--Pressure switch PS-61C, which actuates RS-87, and PS-60C, which actuates RS-85, are also actuated if the POG pressure increases to minus 19-in. H_2O. An auxiliary reverse (dropout) signal will be initiated from either RS-87 or RS-85.

Differential Pressure Instrumentation

The differential pressure instrumentation (Ref. Dwg. D-39102 Rev. 1) consists of two pressure gauges, each 0-4 in. H_2O. Four 3/8 in. copper tubes are connected to each gauge. The sampling points for these tubes are one each for each of the four compartments. By proper valving (see page 6-27) at the pressure gauge enclosure (located at the filter pit) the pressure drop across the absolute filter, the charcoal canister assembly, the roughing filter, or any combination can be obtained. The gauge located at the top of the pressure gauge enclosure is for the south bank of filters, the other gauge for the north bank.

Pressure Test Procedure

Since the POG system is operating at a small per cent of maximum load, an additional quantity of air is allowed to enter the system through a 4-in. standpipe on the inlet side of the filter pit. The total flow, adjusted to the same value for each test, is established by measuring the velocity pressure in the 10-in. duct on the downstream side of the filter pit with an inclined manometer. The valve on the interconnecting line from the scrubber duct should be closed prior to adjusting the flow through filters; and, following the completion of the test, the valve should be restored to the open position.

The pressure drops across the roughing filter, the charcoal filter, the CWS filter, and the combined filters are taken for each compartment; i.e., north and south. Since these measurements are taken with the compartments isolated, that is with only one compartment in service, precautions should be taken to assure that the required valves are closed tightly to prevent leakage. The flow is adjusted after the compartment is placed in service, the various pressure drops are read, and then the flow is rechecked.

These tests will be repeated every six months or after an incident which might affect the pressure drop across the filters. The following itemized procedure will be followed in completing this test:

1. Assure that all experiments which are connected to the POG system are isolated and are not discharging any gases into this system. This, of course, requires that the reactor be shut down; therefore, the test will be performed only during a major reactor shutdown.

2. Attach a 1-in. inclined manometer to the existing pitot tube which is connected to the 10-in. duct. The tubing from the pitot tube is located on the duct-support pole just south of the scrubber building. Attach a 60-in. "U-tube" manometer to the inclined manometer piping as indicated in Figure 6.5.
3. Close the valve on the interconnecting line from the scrubber.
4. Establish the proper valving for either compartment to be in service. NOTE: Only one at a time will be checked.
5. Remove all but <u>one</u> bolt from the flange on the 4-in. standpipe located on the inlet line to the filter pit.
6. Adjust the flange to obtain a reading of .3 in. on the inclined manometer. This is the velocity pressure in the 10-in. pipe.
7. Check the zeroes on the "Magnehelic" gauges by closing the numbered valves and opening the unnumbered valves. See Figure 6.6.
8. Record pressures and pressure drops on the data sheet, Example 6.1. The valve manipulations are as follows:
   a. North roughing filter, open gauge cocks No. 1 and No. 4; the remaining gauge cocks closed.
   b. North charcoal canister assembly, open gauge cocks No. 2 and No. 5; the remaining gauge cocks closed.
   c. North absolute filter, open gauge cocks No. 3 and No. 6; the remaining gauge cocks closed.
   d. Total across north bank, open gauge cocks No. 1 and No. 6; the remaining gauge cocks closed.
   e. South roughing filter, open gauge cocks No. 7 and No. 10; the remaining gauge cocks closed.

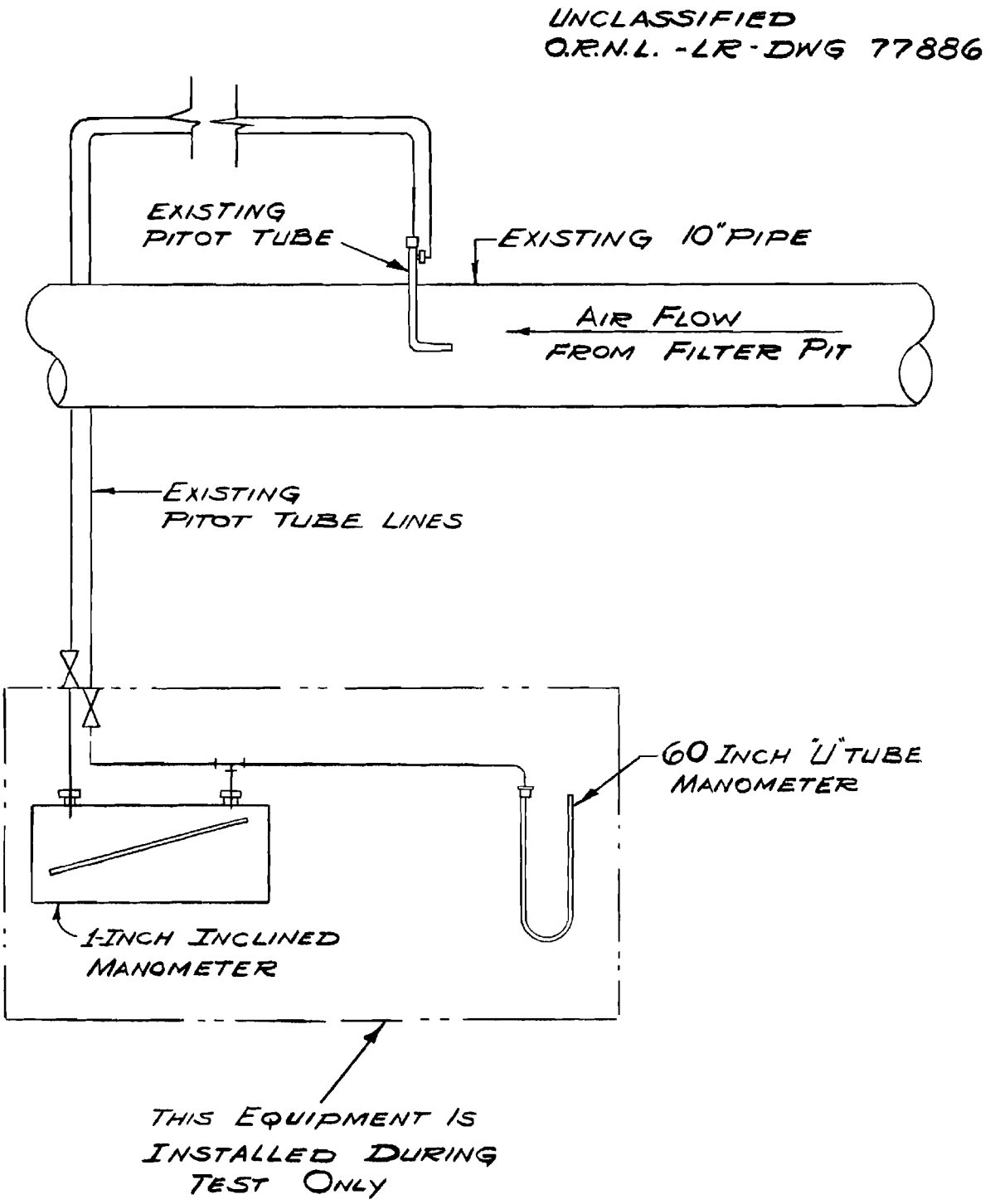

Fig. 6.5. Manometer Installation

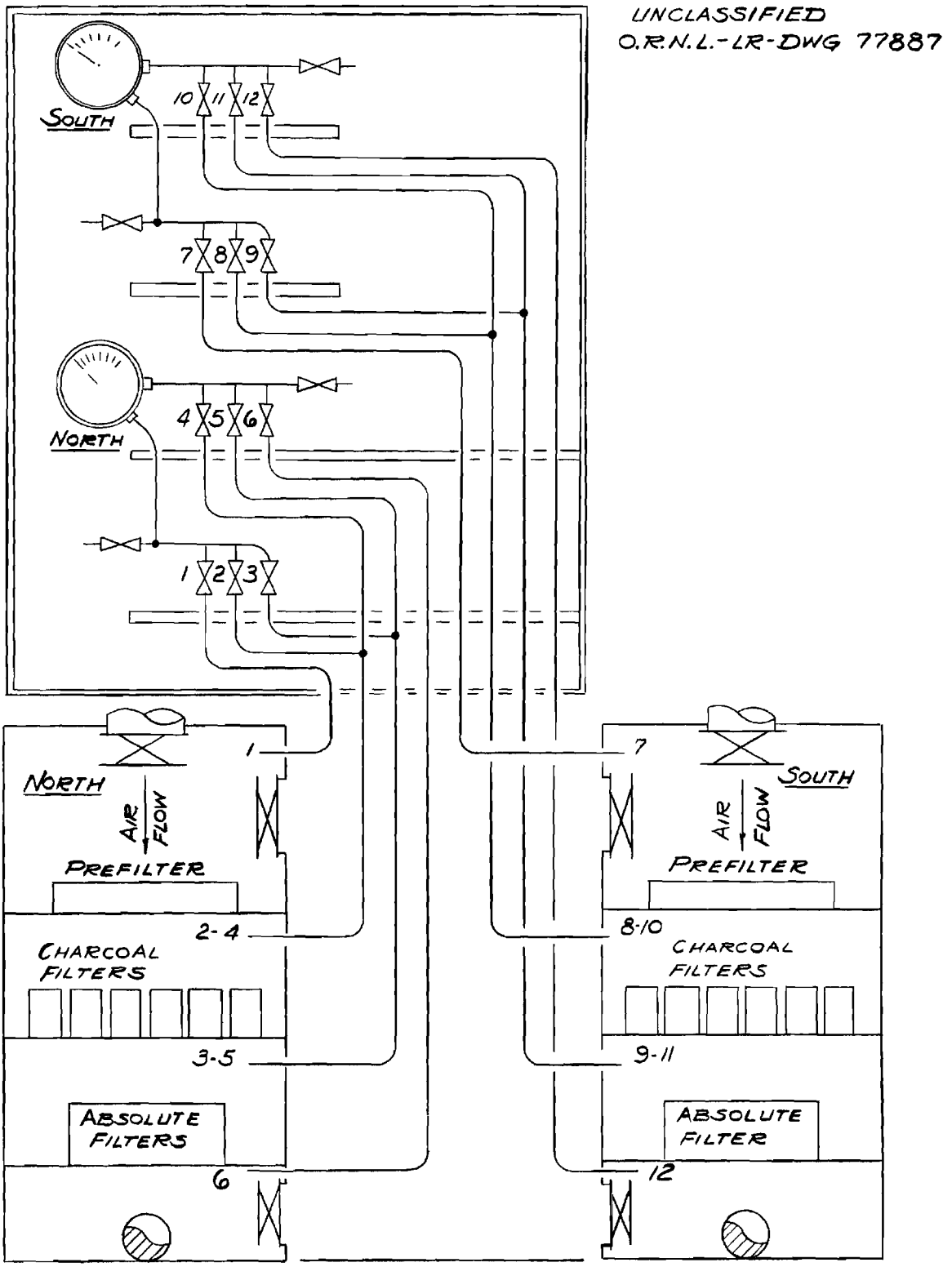

Fig. 6.6. Filter Pit and Gauge Panel

f. South charcoal canister assembly, open gauge cocks No. 8 and No. 11; the remaining gauge cocks closed.

g. South absolute filter, open gauge cocks No. 9 and No. 12; the remaining gauge cocks closed.

h. Total across south bank, open gauge cocks No. 7 and No. 12; the remaining gauge cocks closed.

9. Record fan amperage on data sheet.

10. Repeat steps 2 through 9 for the second compartment.

11. Close and secure the 4-in. flange.

12. Reset the valve on the interconnecting line from the scrubber. Adjust to establish 52 inches of water negative pressure as indicated on the ORR control room instrumentation.

13. Check all valves at the gauge panel to assure that they are closed.

14. Make proper valve arrangements to place the desired compartment in service.

15. Notify all effected experimenters that the POG is available for use.

16. File the completed data sheet in the ORR shutdown file.

Thermal Instrumentation

Two Iron-Constantan thermocouples are located in each filter bank just downstream from the charcoal canister assembly. The purpose of these thermocouples is to monitor temperatures of the charcoal canister assemblies which will increase as β emitting Iodine is collected.

ORR PRESSURIZABLE OFF-GAS FILTER PIT BLDG. 3109

TEST DATA

Date _____ Recorder _____

	North Compartment		South Compartment	
	Valve No's.	In. W. G.	Valve No's.	In. W. G.
1. Temperature _____ °F				
2. V. P. in 10-in. pipe at start				
3. S. P. in 10-in. pipe at start				
4. S. P. at upstream point in pit	1		7	
5. Roughing filter ΔP	1-4		7-10	
6. Charcoal filter ΔP	2-5		8-11	
7. Final (CWS) filter ΔP	3-6		9-12	
8. All filters ΔP	1-6		7-12	
9. V. P. in 10-in. pipe at finish				
10. S. P. in 10-in. pipe at finish				
11. S. P. at upstream point in pit	6		12	
	Before	After	Before	After
12. Fan motor amps				

Note: When the pressure drops approach the values listed below, an evaluation will be made:

1. Roughing filter - 1.5
2. Charcoal filter - 0.6
3. Final (CWS) filter - 3.0

Example 6.1.

The temperature elements (TE-OGF-1A, 2A, 1B, and 2B) transmit signals to the multipoint temperature recorder TR-2 located on vertical-board panel No. 5 in the ORR control room.

Requirements for Use of the POG System

1. All connecting piping must be capable of withstanding 100 psig internal pressure including all parts of the experiment apparatus subject to back-up pressure from the system, or the piping protected by pressure-relief systems which do not discharge to the building or directly to the atmosphere.
2. All valved taps to the system must be closed by pipe caps or plugs when not connected to equipment.
3. The system must not be opened to the building or to the atmosphere when any experiment or test is discharging gases into it which may cause a positive pressure in the system.
4. Check valves may be used to prevent back-up pressure but cannot be used as safety equipment because of their inability to be frequently checked for performance.

Procedure for Placing the POG System in Service

1. The shift supervisor must be assured that experiment tie-in is complete and all requirements for use of the system have been met.
2. Assure that all the valved taps (in the reactor pool and elsewhere), which are not connected to an experiment or equipment, are closed by pipe caps or plugs and that all valves on these taps are closed.
3. Assure that the main (POG V-1) valve on the west side of building 3042 (midsection of building between sidewalk and building) is open and locked.

4. Open the valve on the 1 1/2-in. drain line from the blower (POG V-12).
5. Open the valve at the discharge of the blower (POG V-11) and secure the valve in the open position.
6. Reset the "on-off" breaker (located immediately north of the blower).
7. Press the start button located just below the breaker.
8. Open the slide valve (POG V-10) no more than 2 in. on the 6-in. line connecting the 10-in. POG line to the 24-in. emergency (cell) ventilation line. Secure the slide valve in the open position. (This valve must not be open more than 2 in. With the valve open more than 2 in., intermittent shutdown of the blower has been experienced.) Normally, this valve will be locked in this position.
9. Determine which bank of filters (north or south) is to be used. Open the appropriate POG line inlet (POG V-2 or 3) and exit (POG V-4 or 5) valves to the bank of filters. Close the POG line inlet and exit valves to the bank which is not to be used.
10. Close both pairs of the bank interconnection valves (POG V-6, 7, 8, 9).

Procedure for Removal of the System from Service

1. Close the slide-valve (POG V-10) on the 6-in. line connecting the 10-in. POG line to the 24-in. emergency (cell) ventilation line. Secure this valve in the closed position.
2. Switch the "on-off" breaker to the "off" position.

If this system is to be removed for experiment tie-in, maintenance, or if any valved taps are to be opened the following procedure is to be followed:

1. Assure that no experiments are discharging into the system.
2. Close the POG inlet (POG V-2 or 3) and exit (POG V-4 or 5) valves to the filter pit so as to isolate the filter pit.
3. Close the slide valve (POG V-10) and secure in the closed position.
4. Switch the "on-off" breaker to the "off" position.
5. Close the valve at the discharge of the blower (POG V-11).

Routine Checks

Very few checks are required for this system as it consists of only pipes, filters, a blower, and motor as described in the introduction.

1. Daily

   The blower and motor condition should be checked once daily by the 8-4 shift.

2. Bimonthly

   a. The differential pressures across the filters and charcoal canister assemblies should be checked during the long shutdown, as detailed in Example 6.1.

   b. Oil and grease the motor and rotor during the long shutdown.

6.2d. Additions to the Operating Manual, Procedure Memoranda Book, and Operating Instructions Notebook

Operating procedures are maintained current by formal issuance as conditions change. These procedures are categorized and issued accordingly:

1. Procedures of a temporary nature (those which may or may not become permanent but are of indefinite duration) are issued by the

reactor supervisor under approval of the department superintendent and addressed to the Procedure Memorandum Book. Procedure Memoranda Books are located at the following places: (a) control room, (b) reactor supervisor's office, and (c) the Division office file. The reactor supervisor is responsible for maintaining a current copy in his office and should periodically compare his copy against the control room copy to assure that the books are up to date. As a procedure memorandum is outdated, it will be removed from the book and the procedure marked "void" on the table of contents listing.

2. New procedures of a permanent nature (those which describe permanent changes in operating conditions) are issued as required by the reactor supervisor, subject to approval of the department superintendent, and incorporated as a permanent addition to the Operating Manual. Such an addition will be located in the manual based on subject category.

   If an existing portion of the operating manual has become obsolete, that particular portion will be rewritten in its entirety. The obsolete section will be removed from the manual and the current procedure inserted. It is the responsibility of the reactor supervisor to maintain a current operating manual.

3. Instructions to shift personnel are issued by authority of the reactor engineer as the need arises and are maintained current in the "Operating Instructions Notebook". These instructions may relate to any phase of activity concerning the operation of either the reactor or experiments. They are of a temporary

nature and are for a specified time. These instructions are removed and discarded after they have become obsolete.

1963

7. EMERGENCY PROCEDURES

7.1. Emergency Power Supply

References: D-29682, D-29683, D-29684, D-29685, D-29686, D-39751, D-39757

7.1a. Introduction

Emergency power is supplied to the ORR (and the OGR) by a 350-kw, 480-volts, 3-phase, 60-cycle, diesel-driven generator, located on the first floor level beneath the change room. Power is supplied by the generator for the emergency ventilation system (scrubber), shutdown pump, seat lights, PA system, fire alarm annunciator, building lighting, and experiments as needed.

7.1b. Operation

In the event of a TVA power failure, the generator starts automatically with a delay of 7 to 10 seconds before the power load is assumed. When TVA power is restored, it is necessary to stop the diesel engine manually by turning the switch on the control panel located on the north wall from "Automatic" to "Emergency Stop". As soon as the engine has completely stopped, the switch must be returned to "Automatic" so the generator will be ready for the next emergency.

7.1c. Reliability Checks

The diesel-driven generator is tested weekly by personnel of the Engineering and Mechanical Division to assure starting reliability, and checks are made on critical components of the system; e.g., cooling system, oil system, ignition system, etc. The test consists of switching the

toggle switch, located at the automatic transfer switch box at the OGR, from the "normal" to the "test" position. This action starts the diesel-driven generator. The toggle switch is then returned to the "normal" position. After the diesel-generator has operated for one hour, the test is terminated by turning the switch on the control panel located on the north wall of the diesel-generator room (Bldg 3042 annex) from "Automatic" to "Emergency Stop". After the diesel has stopped, the switch must be returned to the "Automatic" position. This weekly test is initiated from the OGR, during its shutdown, rather than from the ORR to eliminate a momentary power interruption on the ORR emergency electrical system.

In addition to the weekly "start" runs, a 5-hour performance run is made during each of the end-of-cycle shutdowns. The purpose is to determine the reliability under emergency load conditions and to check the system for any malfunctioning components.

Routine shift checks are made to assure that the system is ready for an emergency. These checks consist of checking that the transfer box mode-switch is in "normal", that the control mode is in "automatic", and that the fuel valve on the topside of the diesel engine is pointed west.

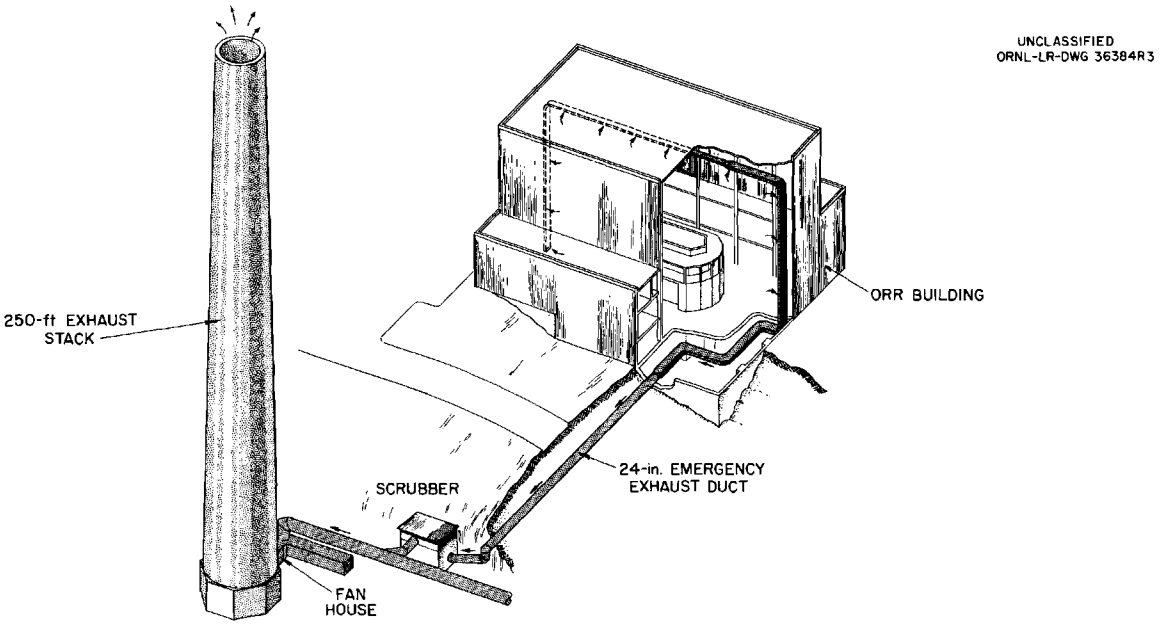

Schematic of ORR Emergency Exhaust System.

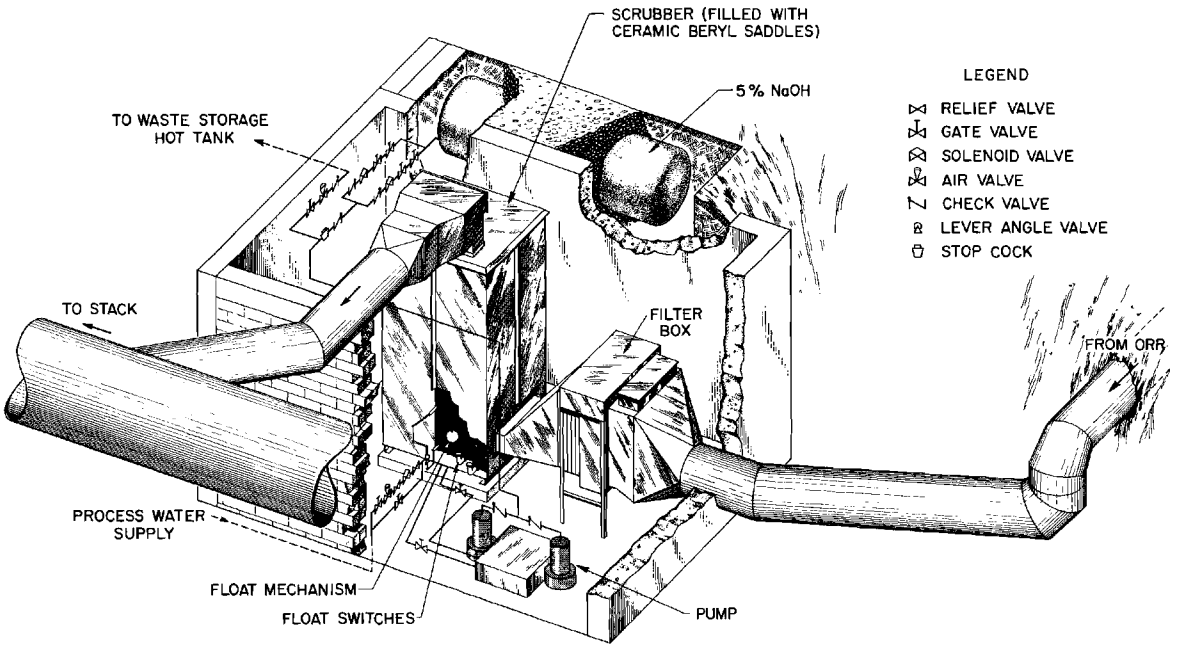

Fig. 7.1. ORR Decontamination Scrubber

UNCLASSIFIED
ORNL-LR-DWG. 51068

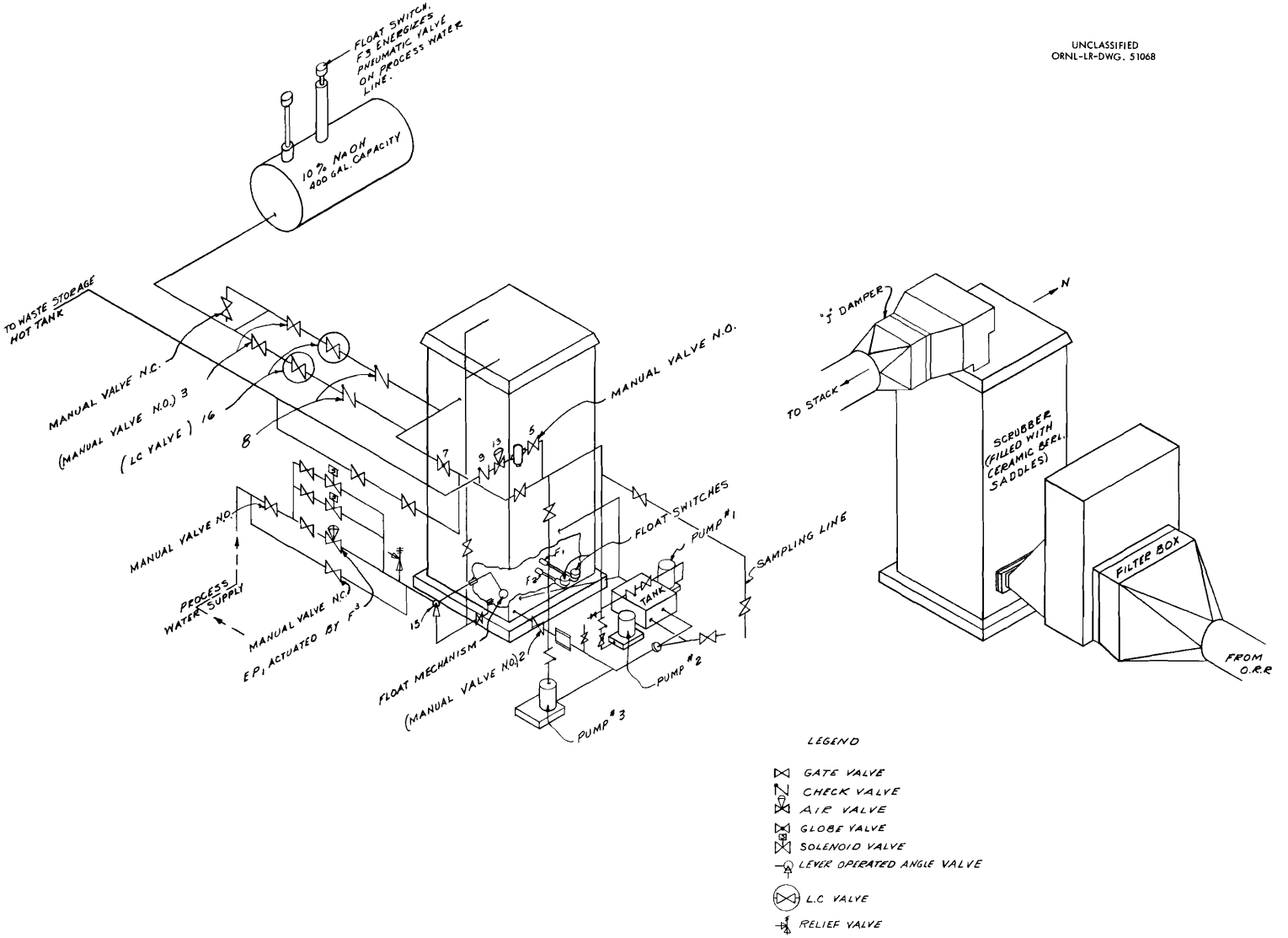

Fig. 7.2. Schematic of ORR Scrubber

7.2. Emergency Ventilation System

References: D-27114, D-27143, D-29101, D-29102, D-29103, D-29104, D-29105, D-29106, D-29107, D-29108, D-29109, D-29110, D-29111, D-29521, D-29522, D-32060, D-33236, D-35725, D-35726, D-35727, D-50877, D-50878, D-50879, D-50880, D-51927, Q-1594G-2, Q-1594G-3, Q-1594-77, Q-2110A-1, Q-2110A-2.

7.2a. Introduction

The emergency ventilation system, Figures 7.1. and 7.2., to be used only at the time of a catastrophic incident, is designed to: (1) automatically seal the building by stopping all ventilating units and closing the truck entrance doors; and (2) compel the building air to be washed with a 5% NaOH solution to remove large quantities of iodine.

7.2b. Components

1. An air-decontamination scrubber, located north of and outside of the 3039 stack fenced area, which compels the air exhausted from the ORR building through a 24-in. transit duct to be filtered, washed with a 5% NaOH solution, and exhausted through the 3039 stack.
2. The 3039 stack area containing duct work leading to the stack by way of dampers and the steam fan.
3. The remote operating station, located near the southwest corner of Building 3038, from which the scrubber can be controlled after it has been actuated from Building 3042.
4. The main control box, located in the control room of Building 3042, which actuates the scrubber control.

7.2c. Operation

Process water is continually recirculated through the scrubber, during normal reactor operation, by two electric pumps. The water level in the sump is controlled at 5 inches by a dual system (electric and pneumatic).* If either electric pump fails, flow switches in the discharge lines detect the failure and (a) actuate annunciators in the control room and (b) automatically start an air driven pump. A flow switch in the discharge line of the air driven pump actuates another annunciator if the air driven pump is running. The instrumentation is presented in Figure 7.3.

If either of the radiation instruments, a detector located just outside the control room or a detector located in the scrubber duct, detects a high radiation condition, or if the containment system SB switch located in the control room is turned, Building 3042 will be put into containment instantaneously. If the high radiation condition persists for 10 seconds on the ORR detector, or instantaneously on the scrubber duct detector, a 10% NaOH will be dumped into the scrubber until the sump level reaches approximately 10 inches. Thus the sump solution will be diluted to 5% NaOH. Once the 10 seconds has elapsed and the caustic dump started, the scrubber control circuit is "locked-in" and must be manually reset.

After the sump level has reached 10 inches, a time delay relay transfers the level switch from control of the electric caustic valve to control of the process water valves. Thus, after the initial caustic dump, the level of the sump solution is controlled at 10 inches by adding process water.

---

*Parallel paths are provided for vital scrubber functions such that the scrubber will function properly if 115 VAC or 100 PSI plant air (or both) are available.

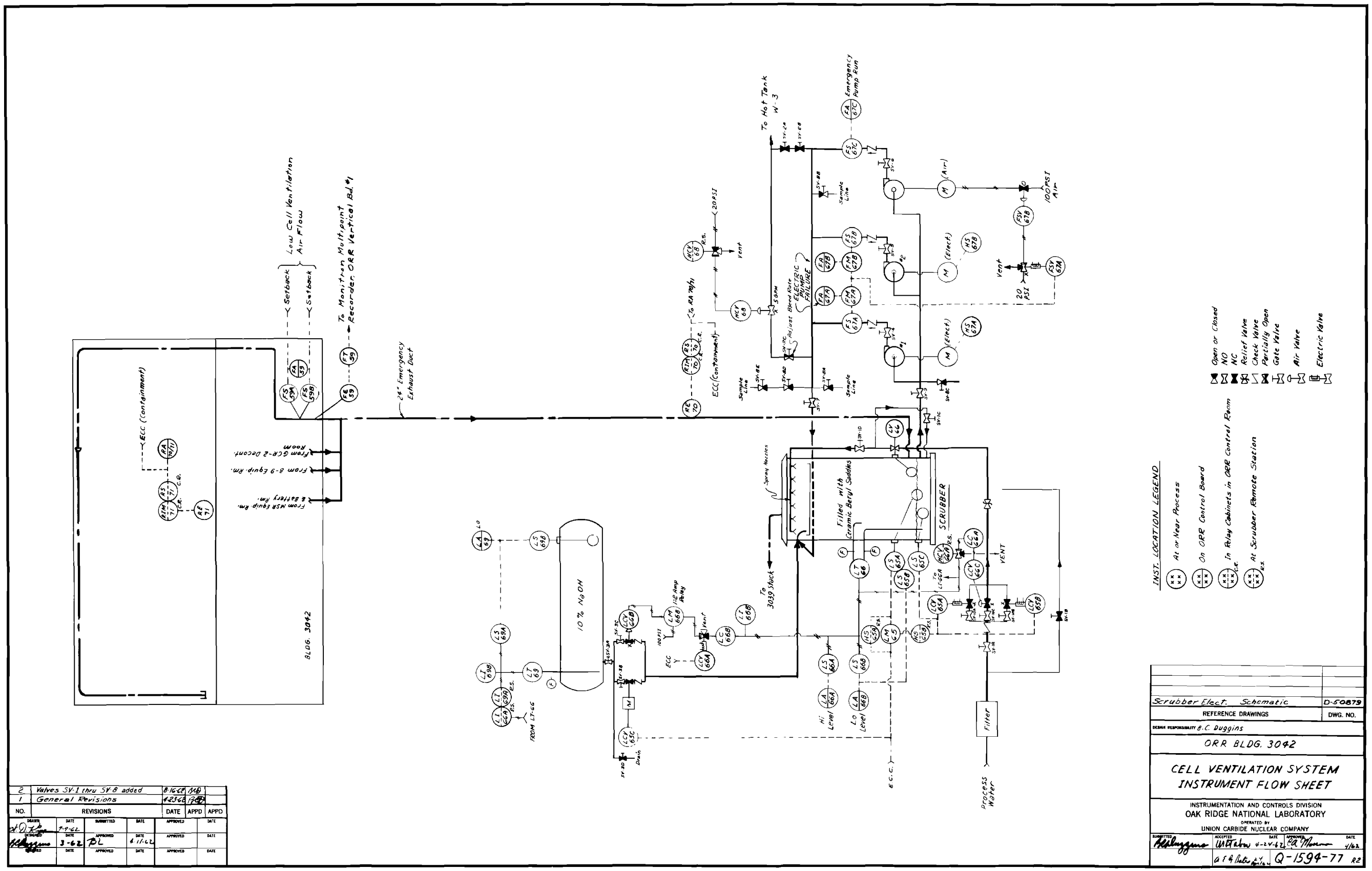

Fig. 7.3. Instrument Flow Sheet

Level switches will actuate a low level alarm at a sump level of 2 inches and a high level alarm at a sump level of 8 inches. During normal operation, an alarm on the level annunciator would mean that the sump water level control was not functioning properly or that caustic had been accidently dumped. Manual valves have been provided at the scrubber to allow solution to be transferred to the hot tank (W-3) to relieve a high sump level condition. A mechanically operated float valve will prevent water from being added to the point where the sump would run over into the particulate filter.

Level switches will actuate a low caustic tank level annunciator should the level drop to 20 inches. Caustic tank level and scrubber sump level are indicated by gauges both within the scrubber building and at the remote operating station.

The following controls are provided at the remote operating station:

1. A manual valve (HCV-68) to cause solution to be bled from the sump to the hot tank.
2. A manual valve (HCV-66A) to override the level control and cause water to be added to the sump.
3. A pushbutton (SRP-1) which will, if depressed and <u>held</u>, prevent this level switch from causing water to be added to the sump after caustic has been dumped.
4. A pushbutton (SRP-2) which will, if depressed and <u>held</u>, allow more caustic to be added to the sump (up to a level of 10 inches) after the initial dump.

The "test" pushbutton on the scrubber panel in the control room, if pushed momentarily, will cause the scrubber to go into its caustic mode

of operation without actuation of the Building 3042 containment system. However, if a high radiation condition should occur during such a test, the building will be automatically contained through an override. The steam fan at the 3039 stack will be started only by a diaphragm switch which detects low vacuum in the duct leading to the stack.

In addition to the duct work that traverses the building to provide emergency ventilation, there are additional ducts connecting the basement cells to the scrubber duct. The "J" damper has been permanently opened providing continuous cell and building ventilation through the scrubber. Since about 6000 cfm of air is continually exhausted from the building during containment operation, the building could be placed under excessive negative pressure should all the roof exhaust fans be turned on simultaneously. For this reason, three of the six exhaust fans have been locked out and must not be used while air from the building is being exhausted through the scrubber.

7.2d. Routine Checks

Since the scrubber system is so vital to reactor operation, certain functions should be checked daily on the 8-4 shift. In addition, a complete functional checkout is performed during each end-of-cycle shutdown.

Daily Scrubber Checks

1. *Sump level
2. Specific gravity
3. *Caustic tank level
4. Total solids
5. pH

---

* Checked every shift.

6. (a) Turn No. 1 electric pump off. (b) The air driven pump should come on.

   Check with the control room. The following annunciators should be in alarm condition:

   (c) Pump No. 1 failure. (d) Emergency pump start.

7. Turn No. 1 electric pump back on to clear the alarm conditions.

   (a) Turn No. 2 electric pump off. (b) The air driven pump should come on.

   Check with the control room. The following annunciators should be in alarm condition:

   (c) Pump No. 2 failure. (d) Emergency pump start.

9. Turn No. 2 electric pump back on to clear the alarm conditions.

If the total solids analysis is greater than 1000 ppm, purge the system until the solids drop below 1000 ppm. This is done in the following manner:

1. Notify the tank farm operations that water will be sent to W-3.
2. Turn manual valve HCV-68, 90°. This valve is located at the remote station.
3. Purge until the total solids drops below 1000 ppm.
4. Restore the manual valve, HCV-68, to normal operation.

<u>End-of-Cycle Scrubber Functional Check</u>

1. Begin the functional check by performing the daily check list above.
2. Actuating the NaOH dump.

   a. Place an operator by each truck door and have the doors opened.

b. Using a radioactive source (at least 100 mr/hr at 6 in.), actuate either the cell ventilation duct chamber located near the scrubber or the monitron located just outside the control room door.

d. Observe the following:

(1) Instantly (within 1 second) building containment will be effected. Check the negative pressure inside the ORR building.

3rd level west of hot cell _____

1st level north _____

1st level south _____

(2) The NaOH will dump from the under ground dump tank to the scrubber sump (after ~10 seconds of continuous activation of the ORR detector and immediately on activation of the scrubber duct detector). Observe the decrease on the tank level indicator in the scrubber building. Annunciator alarms in the control room should be received as follows: on the electrometer at time of actuation; on high level sump as sump level reaches 8 inches. The flow from the dump tank should cease when the sump level reaches 10 inches. The recirculating pumps have been and will continue to operate. Any malfunction at this stage should be reported to the reactor supervisor.

3. Continue recirculating for ~10 minutes and observe the sump level both through the sight glass and the local level indicator while performing the following:

a. Take a sample from the scrubber sump and check the Sp. G.

b. At the remote station, bleed the sump solution to the hot tank (W-3) for ~10 minutes as in the routine check procedure. Observe the liquid level of the sump at the remote indicator. The liquid level in the sump should not change appreciably.

c. Using the make-up water override, allow the sump level to drop below 8 inches, then release the override and observe the level rise on the remote indicator, the local indicator, and through the sight glass. Also, the high level alarm in the ORR control room should again actuate.

4. Close the hand valve (SV-1A) on the process water make-up line.

5. Open the bleed valves (SV-2A and SV-2B) and pump the sump down below 2 inches. This should be performed while observing both the sump sight glass and the local level indicator. Observe that the low level alarm actuates.

6. Deactivate all three pumps. Observe the annunciator action in the control room. Electric pumps No. 1 and No. 2 should actuate and the air motor should not actuate.

7. Manually reset the scrubber control circuitry by pushing the reset button in the ORR control room.

8. Open the hand valve (SV-1A) on the process water make-up line. With the assistance of an I & C mechanic or engineer, assure that water is passing through the level control valves (LCV-65A, LCV-65B, LCV-66C).

Observe: That the 2-inch low level alarm clears

That the 5-inch level control maintains a constant level

9. Reactivate the circulating pumps. Observe that the No. 1 and No. 2 electric pump annunciators clear and that flow has started.

10. Refill the NaOH dump tank with 10% NaOH.

11. Repeat step 2 using the radiation detector not used in step 2. There is one additional check on this dumping. With the aid of an I & C mechanic or engineer, assure that NaOH is being passed through both LCV-66B and LCV-65C. This can be done by closing the manual valves which are in series with the automatic valve (first one then the other) and observe that NaOH flows through each line.

12. Continue recirculating and perform the following operations from the remote station:

    a. Inhibit process water make-up by depressing and holding the pushbutton, SRP-1.

    b. Bleed the scrubber sump to W-3 hot tank while observing the sump level at the remote level indicator and the local level indicator. The high sump level should clear at $\sim$8 inches. Continue the bleed down until the sump level is $\sim$5 inches.

    c. Dump additional NaOH by depressing and holding pushbutton SRP-2 until the 10-inch level control in the sump prohibits or until the low caustic tank level annunciator sounds in the control room. (If the level alarm doesn't sound, continue the bleed-off and NaOH addition until the alarm sounds). When the annunciator sounds, release the pushbutton. Observe both the remote level indicator and the level indicator in the scrubber building and compare to the measured level in the caustic dump tank.

13. Manually reset the scrubber control circuitry by pushing the reset button in the ORR control room.

14. Restore the "Remote Controls" for normal operation.

15. Empty the scrubber sump to W-3 hot tank:

    a. Close the manual valve (SV-1A) on the process water line.

    b. Open the bleed valves (SV-2A and SV-2B) to W-3 hot tank. During this operation, observe the liquid level and do not run the pumps dry.

16. After the sump has been emptied, open the manual valve (SV-1A) on the process water line which will permit the sump to fill to the 5-inch level. Again open the bleed valves (SV-2A and SV-2B) and purge the sump until it contains process water as indicated by a specific gravity of 1.000.

17. Restore the system to normal operation:

    a. Refill the NaOH dump tank with 10% NaOH solution.

    b. The scrubber sump should contain $\sim$5 in. of water and the two electric pumps should be operating (total flow--50 gpm).

    c. The air motor pump ready for operation.

    d. Remote station in normal.

18. Complete "Ready" sheet for the system. (Example 7.1.)

"Ready" Check Sheet for ORR Scrubber

		Date
1.	System has passed functional check	_____
2.	NaOH dump tank filled, concentration checked	_____
3.	Manual valves SV-3A, SV-3B, and SV-3C on NaOH dump line opened and locked	_____
4.	Manual valves SV-1A, SV-1B, and SV-1D on process water line open and locked	_____
5.	Scrubber sump level ~ 5 inches	_____
6.	Two electric pumps operating	_____
7.	Air-motor pump ready for operation	_____
8.	All annunciators on scrubber "normal"	_____
9.	Building containment checked within limits	_____
10.	Valves SV-4, SV-5, SV-6, and SV-7 on pump discharge manifold opened and locked	_____
11.	Valve SV-9 on common pump suction opened and locked	_____

This sheet must be completed by the shift engineer completing the functional check-out before the reactor can be started up.

Example 7.1.

Table 7.1. Valve Listing for Scrubber

Scrubber Valve No.	Valve Aspect	Numbers and Locations
SV-1A	NO	Process water make-up, on process water line in northwest corner of scrubber shack
SV-1B	NC	Process water bypass, on process water line in northwest corner of scrubber shack
SV-1C	NO	Process water to sump, southwest corner of scrubber unit
SV-1D	NO	Process water to top of scrubber, above SV-1C
SV-2A	NC	Bleed to W-3, on west wall of scrubber shack
SV-2B	NC	Bleed to W-3, on west wall of scrubber shack
SV-2C	NO	Bleed to W-3, overhead, southwest corner of scrubber unit
SV-3A	NO	Caustic supply, overhead, northwest corner of scrubber shack
SV-3B	NO	Caustic valve, overhead, northwest corner of scrubber shack
SV-3C	NO	Caustic valve, overhead, northwest corner of scrubber shack
SV-3D	NC	Caustic valve, northwest corner of scrubber shack
SV-4	NO	Pump No. 1 discharge
SV-5	NO	Pump No. 2 discharge
SV-6	NO	Emergency pump discharge
SV-7	NO	Common discharge, overhead, center of west wall in scrubber shack
SV-8A	NC	Sample line No. 1, on common discharge riser on south side of scrubber unit

Table 7.1. - Continued

Scrubber Valve No.	Valve Aspect	Numbers and Locations
SV-8B	NC	Sample line No. 2, on floor at discharge of No. 1 pump
SV-8C	NC	Sample line No. 3, on floor at common pump suction
SV-9	NO	Common pump suction, on floor at southwest corner of scrubber unit

7.3. Emergency Cooling for the ORR

The ORR operation at 30 Mw generates fission products in sufficient quantity that 500 gpm of forced water cooling is necessary immediately after shutdown to remove decay heat. Without decay heat removal, boiling in the core would occur and possibly result in fuel plate meltdown. Several devices have been installed to provide the necessary coolant flow in an emergency to prevent core meltdown.

7.3a. DC Pony Motors

References: Drawings D-37566-R1, D-39744-R3, D-39885, D-39886, D-43637-R1

Description

The d-c. motors are each connected to a bank of 18 storage batteries (16 in the No. 3 motor) which are, in turn, connected to separate, continuous duty battery chargers. Upon failure of plant power, the d-c. units will provide a flow of approximately 2000 gpm for shutdown cooling. Since the direct-coupled d-c. motors are more reliable than the emergency gasoline driven pump which is on standby, they are the main source of emergency cooling.

These d-c. motors, directly coupled to the main pumps, rotate at the same speed as the main pumps when the latter are in normal operation. On loss of plant power, the pumps coast down until the point is reached where the torque versus speed curve of the d-c. motor enables it to continue rotation of the pump. The d-c. motors are connected to the battery supply even in normal operation of the main pumps; therefore, there is no need for relays to operate the supply power to the motors. The motor characteristics

were selected so that the motor requires essentially no current when the pumps are running at normal full speed; the current increases as the pumps slow down (see drawing D-43637-R1, Legend No. 3). Each battery bank is kept charged by an appropriate battery charger.

Minimum Requirements

The minimum requirements for dependability of a d-c. unit are as follows:

1. All 18 batteries (16 in No. 3 cell) must be fully charged; i.e., specific gravity above 1.175, corrected for temperature.
2. The battery charger must be operating to provide the needed charge.
3. Annunciators for DC-1, DC-2, and DC-3 in the control room must indicate all clear.
4. Suction and discharge valves on the pump, open.
5. Motor amperage between +10.0 and 0.0 amps.
6. Battery amperage between +18.0 and -6.6 amps.
7. Battery voltage between +46.0 and +37.0 volts.

NOTE: On items 5, 6, and 7, above, the criteria differs as follows on the No. 3 pump:

Item 5 - Motor amperage between +10.0 and 5.0 amps.

Item 6 - Battery amperage between +20.0 and 0.0 amps.

Item 7 - Battery voltage between +38.0 and +33.5 volts.

Upon notice of an unsatisfactory condition or undependable motor units, the shift electrician should check the following:

1. Fuses
2. Rectifier
3. Terminals, batteries, and connections
4. Motors and starters of the affected units

When starting and stopping the main pumps before, after, and during scheduled shutdowns, the battery-to-motor disconnects should be pulled before stopping and closed after starting the pumps. Otherwise, the d-c. motors will turn the pumps and lower the charge on the batteries.

Alarm and Test Circuit Description

1. Alarm Circuit

There are two relays in the alarm circuit, K-1 and K-2. If K-1 is de-energized or K-2 is energized, an alarm will sound in the control room. Circuit K-1 is de-energized by opening the charger-to-battery disconnect, S-1, or the battery-to-motor disconnect, S-2. Circuit K-2 is energized by any one of four abnormalities.

a. High battery voltage

b. Low battery voltage

c. High battery amps

d. Low battery amps

The battery voltage contacts are located on a voltage circuit monitor designated as CMV. The battery amperage contacts are located on a current circuit monitor designated as CMA. Both CMA and CMV are located in the large panel on the north wall of the pump cell. Since they are prone to stick in the closed position, it is sometimes necessary to reset them manually after an alarm. Descriptions of these relays appear as items 9 and 10 on the subject print. The reset feature does not disturb either the high or low operating points. Care should be taken not to reset using the contact adjustments easily recognizable on the relays.

2. Test Circuit

The battery voltage and the battery amperage can be monitored from the control room in the following manner. Appropriate meters are located on vertical board No. 5 directly beneath the multipoint recorder. Beneath each pair of meters is a pushbutton marked "test". When this button is pushed, relay K-3 is energized disconnecting the charger from the circuit. The voltage and current of the batteries can then be read on the appropriate meters. An alarm will sound when the test button is pushed.

Routine Checks

The roving operator makes a complete visual inspection at the beginning of each shift and checks the battery current and battery voltage and enters it in the operating log for each d-c. unit. He also checks the specific gravity as follows:

1. The day shift checks the specific gravity of all batteries and enters the lowest reading in the operating log.
2. Evening and midnight shifts check the specific gravity of a single battery in the sequence 1, 2, ... 18. A check of the operating log will determine which battery is to be checked.

NOTE: The tops of the batteries for the d-c. pony-motors have been replaced with special tops to prevent loss of water during high charge rate. It is important to insure that these caps are securely fastened following checks of specific gravity.

3. At the termination of each cycle of operation, an operation and endurance test is performed on the system. The procedure sheet outlining this test is shown in Example 7.2.

Procedure for Testing Emergency Cooling Components

The emergency cooling components (d-c. motors, charger and battery, 1000-gpm shutdown pump and gasoline-engine-driven pump) must be checked for operability at the end of each operating cycle. The checkout simulates the sequence of events which occur during power failure. The following steps should be followed in order.

___ 1. After reactor has been shut down, continue circulating reactor water flow with main pumps for 30 minutes (to remove the after heat), or until $78^{o}F < T$ out $< 100^{o}F$ and T out = T pool. Cooling should be done slowly to avoid thermal shock to core tank.

___ 2. Disconnect all d-c. motors from charger and batteries by throwing both "battery-charger" and "battery-motor" disconnects. DC-1 and DC-2 telalarm should alarm.

___ 3. Pull blocks on shutdown pump and gasoline-motor-driven pump.

___ 4. Turn off No. 1 and 2 main pumps. Adjust flow on No. 3 to 1200 gpm.

___ 5. Replace block on shutdown pump. Pump should start, and this provides a check on the flow switch in this phase of circuit.

___ 6. Remove shutdown pump block.

___ 7. Replace gasoline pump block.

___ 8. Reduce flow in No. 3 pump below 1000 gpm and gasoline pump should start.

___ 9. Increase flow on No. 3 pump to full flow.

___ 10. Restore blockout plug on shutdown pump.

___ 11. Shut down main pump No. 3 and with flow coasting down, shutdown pump should start.

Example 7.2.

___ 12. Quickly (before flow drops < 1000 gpm) pull block on shutdown pump. Gasoline pump should start.

___ 13. Close the motorized valve on No. 3 pump. At this point, the tank access cover may be removed, since there is little mixing between pool and tank for flows less than 3000 gpm. Pull test blocks on main pumps.

___ 14. Restore "battery-motor" disconnects to normal. DC motors should come on.

___ 15. Remove "gasoline-motor-driven" pump block.

___ 16. Check flow through system supplied by d-c. motors for 30 minutes.

Max._____gpm Min._____gpm

___ 17. Restore all "battery-charger" disconnects. Pull "battery-motor" disconnects.

___ 18. Restore "gasoline-motor-driven" pump block. Run gasoline pump for two hours and then shut down. Electric pump may then be started if needed.

Example 7.2. (Continued)

4. Each time a main pump on the reactor system is shut down, the d-c. pony-motor should be checked to assure its proper operation. Any malfunction should be repaired and called to the attention of the reactor supervisor.

7.3b. Emergency Gasoline Pump

References

D-44118, D-45580

Introduction

The purpose of the emergency gasoline pump, located in the primary pump house is to provide a flow of approximately 1000 gpm of cooling water through the reactor in the event of an electrical power failure. Its normal state is on standby with the following conditions:

1. The inlet and exit valves are open and locked with a chain.
2. The block, located in the control room on the main panel board, inserted in position.

Routine Checks

To insure the reliability of the gasoline pump, the following items are checked by the 4-12 shift each day that the reactor is operating.

1. The gas tank level.
2. The radiator water level
3. The oil level
4. The water level in the batteries
5. That the air bleed-off valve is open

In addition to the daily checks, the gasoline motor is run for one hour each week to assure operability. A timer has been installed to allow

automatic shut off after testing, returning the gasoline pump to the automatic stand-by condition. The timer is located on the wall just south of the entrance to the emergency gasoline pump cell. To test the gasoline pump, set the timer for the desired testing period and press the start button located on the timer box.

A local monitoring system, warning lights and a bell, monitors conditions of the engine and warns of abnormal conditions such as over-crank, low water, and low oil.

7.3c. Shutdown Pump

References

D-18774, D-44118

Introduction

The purpose of the shutdown pump is to remove decay heat during normal shutdown and to provide emergency cooling flow of approximately 1000 gpm in the event of an electrical power outage. The normal state of the shutdown pump is on standby with the following conditions:

1. The inlet and exit valves are open and locked with a chain.
2. The block located in the control room on the main panel board is inserted in position.

In the event of an electrical power outage, the emergency diesel generator will furnish the necessary power for the shutdown pump to maintain a flow of greater than 1000 gpm.

The operational dependability is tested during each bimonthly long-shutdown and, as stated above, the pump is used during each normal shutdown.

7.3d. Minimum Requirements for Reactor Operation

The following are the minimum emergency units necessary for operation of the ORR at power levels above the minimum accountable power level.

1. At 15 Mw or below - none
2. At 15-20 Mw
   a. One d-c. unit dependable, or
   b. The gasoline-engine-driven pump dependable
3. Greater than 20 Mw
   a. Two d-c. units dependable, or
   b. The gasoline-engine-driven pump running with 1/2 tank or more of gasoline; the battery specific gravity, normal; the pump vent-valve, on top of the pump housing, open to provide small cooling flow; and, one d-c. unit dependable.

If the minimum requirements on the emergency units cannot be met, the reactor power should be reduced to the level where the requirements can be met.

7.3e. Loss of Main Cooling Pumps

In the event that reactor water flow is lost due to a stoppage or breakdown of the main cooling pumps, the reactor will be scrammed. If it is not scrammed automatically, it should be shut down manually by using the console scram switch.

If the main cooling pumps have shut off due to a loss of electrical power in the area, the main cooling flow will coast down to approximately 3000 gpm and the 3 d-c. pony-motors will assume the load, maintaining this flow. If the d-c. pony-motors fail to maintain a flow of greater than

1200 gpm, the shutdown pump should start and maintain this flow. However, if the emergency diesel generator has failed to assume the power load, the shutdown pump will not start since its emergency power is supplied by the diesel generator. In this case, the flow will continue to drop below 1000 gpm whereupon the emergency gasoline pump should start, providing a cooling flow of approximately 1000 gpm. The operation of both the gasoline pump and the shutdown pump is indicated by red lights on the control panel. The light for the gasoline pump does not require building power and should indicate operation even during a complete electrical power outage.

If all of the above fail, a flow through the reactor core can be started by opening the "Quick Opening Valve" located at the north end of the pump house, just east of the bypass system water lines. This valve is operated by lifting the handle off the ground and pushing it as far west as possible and as rapidly as possible. This will drain water from the reactor tank and the reactor tank, in turn, will receive water from the reactor pool via the equalizer leg between the two systems.

When the pool level approaches the top of the reactor tank, additional water must be supplied to the reactor tank. This can be done in the following ways:

1. Sending water to the reactor pool from the center and west pools via the "Fill and Drain" pump.
2. Sending water to the reactor pool from the storage tanks via the "Fill and Drain" pump.
3. Sending water from Bldg. 3004 to any of the pools or the storage tanks by opening valves 409B, 411A, 410A, located near the top of the wall on the north side of the second level balcony.

4. If the three items above prove to be insufficient, then, as a last resort, but without hesitation, open the "Process Water" valve. The handle is located on the outside, north wall of the building, immediately west of the north first level exit door. This will allow process water to be sprayed over the core.

7.3f. Rupture of a Primary Cooling Line

If during an incident (earthquake, bombing, etc.), one of the main reactor cooling lines should rupture causing a rapid loss of water from the cooling system, the "Process Water" valve described above, should be opened immediately and the emergency ventilation system (scrubber) put into operation. The scrubber operation would be necessary in the event the process water system was unable to prevent even a minor core meltdown. Naturally the reactor should be scrammed, if the automatic control has not already done so.

7.3g. Summary

It is imperative that Reactor Operations Department personnel familiarize themselves with the purpose, location and operation of each of the components which provide emergency cooling for the reactor. Listed below are the items, again, in the order for which they would be expected to become operable:

1. DC Pony Motors
2. Shutdown Pump
3. Emergency Gasoline Pump
4. Quick Opening Valve
5. Center and West Pool water
6. Storage Tank water
7. Demineralized water from Bldg. 3004
8. Process Water Valve

7.4. Emergency Services

When an emergency occurs, it is the responsibility of the person discovering the emergency to take immediate action to protect personnel and property and bring the emergency under control. This applies to fire, radiation, explosions, personal injury, or any other emergency, and should be accomplished by one or more of the following methods:

1. Control the emergency single-handledly if possible.
2. Telephone 6358 (Emergency Control Center) for help.
3. Pull the nearest fire alarm box.
4. Call the local emergency supervisor.
5. Call a local emergency squad member or anyone near.
6. Sound the building evacuation alarm if necessary.
7. Meet and orient the emergency service units.

When a call is received by the Emergency Control Center at 6358, the dispatcher immediately notifies the Laboratory Shift Supervisor and dispatches the emergency service units needed (Fire, Guard, etc.).

7.4a. Fire Department

The Fire Department contains two sections, a fire-fighting section and a building-inspection section. The fire fighting group is available at all times; the building-inspection group is available on the regular 8-4:30 shift.

The inspection group makes periodic inspections of Building 3042 and reports fire hazards to the building supervisor. Reactor Operations personnel can aid in fire prevention by reporting fire hazards to either the shift engineer or to the Fire Department Inspection Group.

A fire may be reported to the Fire Department by telephone (call 6358) stating the location, name of the caller, badge number, and the type of fire, or by actuating the nearest fire alarm box. In either case the person should remain in the area and direct Fire Department personnel to the fire.

Immediately after a fire extinguisher is used, a call should be made to the Fire Captain on duty, reporting the use of the fire extinguisher and the nature of the emergency. This will insure that the fire extinguisher will be refilled and placed back in service for future emergencies.

Personnel of the Fire Department are equipped and trained to administer first aid. The pnealator and inhalator are taken to all emergencies.

Fire-Fighting Rules

1. Put out a small fire if you are sure you can, then call the Fire Department by phone.
2. Report all other fires to the Fire Department at once and sound the exit alarm.
3. Direct the Fire Department to the scene.

7.4b. Guard Department

The Guard Department Headquarters is located in Building 2500. The main function is plant security; however, many other services are performed by the department personnel. Plant employees can aid the guards in the performance of their duties by properly wearing the picture film badge and observing plant rules. The badge should be worn on the left side, shirt pocket area.

The Guard Department works in conjunction with the Fire Department on fire alarms. Both departments have identical alarm code systems. Upon receiving a fire alarm by phone or fire alarm box, the Fire Department dispatcher will accompany the fire trucks to the emergency and the Guard Department dispatcher will operate the alarm code system until the fire dispatcher's return. Designated guards on all shifts are trained as auxiliary firemen. These men also have training in first aid.

Permits for the operation of plant vehicles are issued by the day shift Guard Captain. Permits for operating vehicles up to a 3/4-ton truck will be issued upon presentation of a State Permit. To operate vehicles larger than the 3/4-ton truck, the department will give a driver's test.

The plant ambulance is operated by guards. In an incident where ambulance service is needed, a phone call should be made to the Emergency Control Center, phone 6358. The ambulance driver will stop at the dispensary and a nurse and/or doctor will accompany the driver to the emergency.

7.4c. Dispensary

The Health Division's main dispensary is located in Building 4500, Wing 5. The Division is staffed with 4 doctors and 7 nurses. Field offices are located in Buildings 2418, 7009, and 4500. The field offices, with one nurse on duty at each office, are open Monday through Friday on the day shift. The main dispensary is always open; however, only one nurse is on duty on the 4-12 shift, holidays, and weekends and only limited services on the 12-8 shift.

Services of the Dispensary can be received at any time; however, an appointment must be made for a doctor's services, except in case of an

emergency. In case of an injury, regardless of how slight, the employee must report to medical for treatment.

7.4d. Maintenance

The operation of the ORR and allied equipment requires considerable maintenance. To obtain the services of the Maintenance Department, a work order bearing the department number, the job order number, and a brief description of the repair work needed, is sent to the Maintenance Engineer. If the job is an emergency, arrangements will be made for immediate repairs.

For emergency maintenance on evening shifts or weekends, the Laboratory Shift Supervisor will be notified of the situation and will make the necessary arrangements for the "call-in" of proper personnel.

7.5. Evacuation Procedures

7.5a. Emergency Directors and Alternates

1. Building 3001

a. Local Emergency Director	C. B. Gaither
b. Alternate (Shift Foreman)	R. D. Hulen
	T. B. Nixon
	C. McBee
	E. D. Lance
	L. P. Jernigan, Jr.

2. Buildings 3004 and 3005

a. Local Emergency Director	H. V. Klaus
b. Alternate (Shift Foreman)	R. D. Hulen
	T. B. Nixon
	C. McBee
	E. D. Lance
	L. P. Jernigan, Jr.

3. Building 3042

a. Local Emergency Director	W. H. Tabor
b. Alternate (Shift Engineer)	E. F. Roy
	K. H. Poteet
	C. A. Sweet
	W. A. Hartman

7.5b. Laboratory Evacuation Signal

The Laboratory evacuation signal is a steady siren-like wail of approximately 10 seconds duration on the Laboratory-wide Bell Telephone public

address system, followed by verbal instructions over the public address system.

7.5c. Laboratory Evacuation - Emergency Outside the Department

If an emergency requiring a plant-wide evacuation occurs outside the department, the following steps should be taken:

1. The control desk operator will confirm that a true evacuation condition exists, according to the message received over the Laboratory-wide public address system, and will scram the reactor.
2. The control desk operator will announce the situation over the public address system in the building by stating, "This is a plant-wide evacuation. Evacuate the building. You will receive further orders over the Laboratory-wide public address system."
3. The control desk operator will then take the emergency package from the ORR control room, and leave the building via the west exit of the second floor, if practical.
4. Further evacuation orders will be announced over the Laboratory-wide public address system, located at various points outside the building.

7.5d. General Alert

On a general alert, the signal will come from the fire-alarm system. This will be five alarms followed by the alarm code of the fire alarm box nearest the emergency. This signal is sounded for general-alert emergencies and second-alarm fires.

7.5e. Local Area Evacuation - Emergency Outside the Department

If an emergency requiring a local area evacuation occurs from a source outside the department, the control desk operator will be notified by the Laboratory Shift Supervisor or other responsible departments for a local area evacuation. The following steps will be taken by the control desk operator:

1. Scram the reactor.
2. Sound the evacuation horn for 10 seconds.
3. Announce over the building PA system, "This is an emergency outside the Reactor Operations Department. Evacuate the building." It will be necessary to turn off the building evacuation horns while using the public address system; however, upon the completion of the evacuation announcements, the evacuation horn should be again turned on and left in this position.
4. Take the emergency equipment package from the control room and leave the building via the west exit of the second floor, if practical.
5. Further instructions will be announced over the Laboratory-wide public address system, located at various points outside the building.

7.5f. Building Evacuation--Emergency in Building 3042

If the emergency occurs in Building 3042, the following steps will be taken:

1. The control desk operator will scram the reactor.
2. The control desk operator will sound the building evacuation horn for 10 seconds.

3. The control desk operator will then announce the situation over the public address system by stating, "This is a Reactor Building emergency. Evacuate the building." It will be necessary to turn off the building evacuation horn while using the public address system; however, upon completion of the evacuation announcement, the evacuation horn will be turned on and left in this position.
4. The control desk operator will take the emergency equipment package from the ORR control room, and if practical, will leave the building via the west exit of the second floor.
5. The local emergency director or, in his absence, the control desk operator will estimate the magnitude of the emergency and notify the Emergency Control Center, phone 6358. In case of fire, he will actuate the nearest fire alarm box. If in the opinion of the local emergency director or his alternate the emergency is sufficiently serious, he will recommend to the Emergency Control Center that the entire Laboratory be evacuated immediately.
6. The Laboratory-wide public address system, which is located at various points outside the building, will announce further evacuation orders.
7. If the local emergency director deems it necessary, he will initiate the evacuation plan for Building 3001, 3004, and 3005.
8. If the situation requires the evacuation of contaminated air from the building, the local emergency director will actuate the emergency ventilation system. All of the emergency ventilation systems will ordinarily be activated automatically if radiation levels reach a predetermined value.

9. The local emergency director will combat the emergency until relieved by higher authority.

1963

8. RECORDS

8.1. Data Accumulation

8.1a. Introduction

To facilitate the interpretation of accumulated operating data, uniformity in recording the data is of the utmost importance. The forms described in this section are used to record, collate, and aid in the interpretation of operating data. In general, the data will be recorded by operators. The shift engineer is responsible for making sure that all pertinent data is recorded. It is also his responsibility to check any that may be questionable.

8.1b. Routine Daily Report Forms

ORR Hourly Readings (Example 8.1.)

This data is recorded each hour, on the half-hour, by the control desk operator. The data required on this report form is as follows:

1. Temperature, Reactor Water In (T_1)^oF

   These readings are taken from the multi-temperature recorder.

2. Temperature, Reactor Water Out (T_2)^oF

   These readings are taken from the exit-temperature recorder.

3. Reactor Water Flow - gal/min.

   This is the total cooling water flow minus the flow directed away for demineralization and facility cooling. The reading is taken directly from the flow indicators on the graphic panel.

4. ΔT

   This is the temperature differential across the reactor and is the reading of the ΔT instrument. It should check with (T_2-T_1).

ORR HOURLY READINGS

DATE

SHIFT

SUPERVISOR

TIME								
Gamma Chamber 1/2								
Temperature Reactor Water In (T_1) °F								
Temperature Reactor Water Out (T_2) °F								
Reactor Water Flow - Gal/min.								
ΔT								
$\Delta T \times$ Gal/min. $\times 1.465 \times 10^{-4} = MW_1$								
Temperature Reactor Pool Water In (T_3) °F								
Temperature Reactor Pool Water Out (T_4) °F								
Pool Water Flow - Gal/min.								
$T_4 - T_3 = \Delta T'$								
$\Delta T' \times$ Gal/min. $\times 1.465 \times 10^{-4} = MW_2$								
$MW_1 + MW_2$ = Total Heat Power - MW								
#1 Safety								
#2 Safety								
#3 Safety								
μμ Ammeter								
Log N								
Outside Temperature								
Radioactivity Reactor Water								
Radioactivity Pool Water								
#1 Shim Rod - Inches Out								
#2 Shim Rod - Inches Out								
#3 Shim Rod - Inches Out								
#4 Shim Rod - Inches Out								
#5 Shim Rod - Inches Out								
#6 Shim Rod - Inches Out								

UCN-1706
(3 8-50)

Example 8.1.

5. $\Delta T \times gal/min \times 1.465 \times 10^{-4} = Mw_1$

This calculation is the heat removed from the reactor by the main flow of cooling water.

6. Temperature, Reactor Pool Water In (T_3)^oF

7. Temperature, Reactor Pool Water Out (T_4)^oF

These readings are taken from the multi-temperature recorder.

8. Pool Water Flow - gal/min

This flow is taken from the pool water flow indicator on the graphic panel.

9. $T_4 - T_3 = \Delta T'$

This calculation is the temperature differential across the pool cooling water heat exchanger.

10. $\Delta T' \times gal/min \times 1.465 \times 10^{-4} = Mw_2$

This calculation is the heat removed from the reactor by the pool cooling system.

11. $Mw_1 + Mw_2$ = Total Heat Power, Mw

This calculation is the total heat power of the reactor in megawatts.

12. No. 1 Safety

13. No. 2 Safety

14. No. 3 Safety

These are the safety level readings taken from the safety recorders.

15. Micromicro-ammeter

This is read directly from the micromicro-ammeter recorder.

16. Log N

The Log N level is read directly from the Log N recorder being used.

17. Outside Temperature

This temperature reading is taken from the multi-temperature recorder.

18. Radioactivity, Reactor Water

19. Radioactivity, Pool Water

These readings are taken directly from the respective recorders.

20. Shim Rods - Inches Out

These readings are taken from the selsyn instruments on the control console.

ORR Accumulated Instrument Power (Example 8.2.)

This form is a record of the power level for a twenty-four hour period. At constant power, the power level, as indicated by the No. 1 safety, is recorded on the half hour. The total power accumulated (hours of operation times the power level) is recorded on the hour. If there are changes in power level, they are recorded after each power change regardless of the time.

Shift Check Sheets

There are many instruments to be checked and duties to be performed, necessary to the operation of the reactor, that cannot be done by the operator at the control desk. To make sure that these important jobs are done, daily check sheets have been produced for each shift. When these duties are attended to, by the operators not on control desk duty, they are checked off on the check sheet.

ORR ACCUMULATED INSTRUMENT POWER

DATE	DAY NUMBER

12-8 SHIFT			8-4 SHIFT			4-12 SHIFT		
SUPERVISOR			SUPERVISOR			SUPERVISOR		
TIME	POWER	MWH	TIME	POWER	MWH	TIME	POWER	MWH
	TOTAL			TOTAL			TOTAL	

UCN-2302
(3 11-60)

POWER LEVEL CHANGES

TIME AND CHANGES ARE TO BE RECORDED

Example 8.2.

These check sheets are interpreted as follows for the midnight shift (12-8), day shift (8-4) and evening shift (4-12):

12-8 Shift (Example 8.3.)

Area Checked for Malfunctions

As the shift checks are made, the operator should observe the general area for equipment malfunctions or any unusual conditions.

Emergency Power System

This is a diesel-powered generator that starts automatically if there is a TVA power failure. The check points are identified on the check sheet.

Log and Clipboard Checked for Special Assignments

(Self explanatory)

Batteries on DC-1, 2, and 3

Check d-c. batteries in the reactor pump house and record the specific gravities.

Check Sumps

Check the water level in the sumps and the operation of the sump pumps.

Experiment Checks Where Necessary

Make experiment checks as requested by experimenters.

Demineralizer's pH and Resistivities Logged

Check the resistivity and pH level of the influent and effluent water from both the reactor demineralizer and the pool demineralizer. Enter the readings in the log book.

Yellow Hot Cans Emptied

Dispose of contaminated materials in these cans to the "hot" dumpster.

12-8 SHIFT ORR DAILY CHECK SHEET

DATE	FILLED OUT BY						
	SATURDAY	SUNDAY	MONDAY	TUESDAY	WEDNESDAY	THURSDAY	FRIDAY
*Area checked for malfunctions							
*EMERGENCY POWER SYSTEM:							
a. Transfer mode switch in "normal"							
b. Diesel mode switch in "auto"							
c. Fuel Valve of diesel pointed West							
*Log and Clipboards checked for spec. assignments							
*Batteries on DC 1, 2, 3							
*Check sumps							
*Experiment checks where necessary							
*Demineralizer's pH and resistivities logged							
*Yellow hot cans emptied							
*Daily report for previous day complete							
*Building CAMs and monitors operating							
*All supplies checked							
*Cutie-pies and survey meters							
*Off gas water traps							
a. Blow down catch tank							
b. Fill seal tank							
*Storage tank level							
Reactor and pool secondary system readings logged							
Corrosion test experiment							
Degasifier in proper operation							
Cold traps, read and serviced							
Hyd. tube sample "in" and "out"							
Purge specified Beam Holes							

* *To be performed during shutdowns*

UCN-2275A
(3 10-60)

Example 8.3.

Daily Report for Previous Day Complete

Summarize on the "Daily Summary", the data accumulated in the previous 24 hours.

Building CAMs and Monitrons Operating

Check all monitrons and constant air monitors to make sure that they are "on" and on the high sensitivity scale.

All Supplies Checked

Supply deficiencies are to be reported and logged. The 8-4 shift will obtain any deficiencies.

Cutie-Pies and Survey Meters

Check to make sure these instruments are provided in sufficient quantity at various locations.

Off-Gas Water Traps

The catch tank is to be cleared of accumulated water. Check that the seal tank level is sufficient.

Storage Tanks Levels

Note the levels as indicated on the control panel indicators.

Reactor and Pool Secondary System Readings Logged

pH and chromate analysis of secondary systems taken and logged in the log book.

Corrosion Test Experiment

Check the water level in the surge tank, water temperature, and the water flow to each test.

Degasifier in Proper Operation

Check the water level in the sight glass. The level should be higher than one-third of the glass but not above the glass.

Cold Traps, Read and Serviced

Add dry ice and/or make other necessary changes to the cold traps. Record the readings of the vacuum gauges on the purge lines.

Hydraulic Tube Samples "in" and "out"

Check for samples to be inserted or removed.

Purge Specified Beam Holes

(Self explanatory)

8-4 Shift (Example 8.4.)

Area Checked for Malfunctions

As the shift checks are made, the operator should observe the general area for equipment malfunctions or any unusual conditions.

Emergency Power System

This is a diesel-powered generator that starts automatically if there is a TVA power failure. The check points are identified on the check sheet.

Log and Clipboard Checked for Special Assignments

(Self explanatory)

DC Battery Checks Made and Sp. G. Taken

The specific gravity of all batteries are taken on this shift.

Check Sumps

Check the water level and pump operation and make an activity analysis of each sump.

Experiment Checks Where Necessary

Make experiment checks as requested by experimenters.

Demineralizer--Reactor

The status of the unit is recorded as "In Use", "Ready", or "Being Regenerated".

8-4 SHIFT ORR DAILY CHECK SHEET

DATE | FILLED OUT BY

	FRIDAY	SATURDAY	SUNDAY	MONDAY	TUESDAY	WEDNESDAY	THURSDAY
*Area checked for malfunctions							
***EMERGENCY POWER SYSTEM:**							
a. Transfer mode switch in "normal"							
b. Diesel mode switch in "auto"							
c. Fuel Valve of diesel pointed West							
*Log and Clipboards checked for spec. assignments							
*DC battery check made and Sp. G. taken							
*Check sumps							
*Experiment checks where necessary							
*Demineralizer -- Reactor							
In Use							
Ready							
Being regenerated							
Test Scrubber Pumps *Demineralizer -- Pool							
In Use							
Ready							
Being regenerated							
*Daily water system readings							
*Storage tank level							
*Supplies ordered or obtained							
*Radiation survey							
Pool and reactor secondary system readings logged							
Reactor "on" lights checked							
Corrasion experiment							
Degasifier in proper operation							
Check cold trap readings and service							
Hyd tube samples "in" and "out"							

** To be performed during shutdowns*

UCN-2275B
(3 10-60)

Example 8.4.

Demineralizer--Pool

The status of the unit is recorded as "In Use", "Ready", or "Being Regenerated".

Test Scrubber Pump

This test is to determine if the motor rotor turns freely and is not hampered by NaOH accumulation.

Daily Water System Readings

See Example 8.5., ORR Daily Water System Checks.

Storage Tank Levels

Note the levels as indicated on the control panel indicators.

Supplies Ordered or Obtained

Supply deficiencies, noted by 12-8 shift, are to be obtained by the 8-4 shift.

Radiation Survey

This survey is conducted each Saturday and following any shutdowns requiring a core relcading. See Example 8.12.

Reactor and Pool Secondary System Readings Logged

pH and chromate analysis of secondary systems taken and logged in the log book.

Reactor "on" Lights Checked

All "on" lights are to be burning when the reactor is operating. Any "on" lights which are burned out are to be replaced immediately.

Corrosion Experiment

Check the water level in the surge tank, water temperature, and the water flow to each test.

Degasifier in Proper Operation

Check the water level in the sight glass. The level should be higher than one-third of the glass but not above the glass.

Cold Traps, Read and Serviced

Add dry ice and/or make other necessary changes to the cold traps. Record the readings of the vacuum gauges on the purge lines.

Hydraulic Tube Samples "in" and "out"

Check for samples to be inserted or removed.

4-12 Shift (Example 8.5.)

Area Checked for Malfunctions

As the shift checks are made, the operator should observe the general area for equipment malfunctions or any unusual conditions.

Emergency Power System

This is a diesel-powered generator that starts automatically if there is a TVA power failure. The check points are identified on the check sheet.

Log and Clipboard Checked for Special Assignments

(Self explanatory)

DC Battery Checks Made and Sp. G. Taken

The specific gravities of all batteries are taken on this shift.

Check Sumps

Check the water level in the sumps and the operation of the sump pumps.

Experiment Checks Where Necessary

Make experiment checks as requested by experimenters.

4-12 SHIFT ORR DAILY CHECK SHEET

DATE	FILLED OUT BY						
	WEDNESDAY	THURSDAY	FRIDAY	SATURDAY	SUNDAY	MONDAY	TUESDAY
*Area checked for malfunctions							
*EMERGENCY POWER SYSTEM:							
a. Transfer mode switch in "normal"							
b. Diesel mode switch in "auto"							
c. Fuel Valve of diesel pointed West							
*Log and clipboards checked for spec. assignments							
*Batteries on DC 1, 2, 3							
*Check sumps							
*Experiment checks where necessary							
*Demineralizer's pH and resistivities logged							
*Third floor level straightened up							
*Weekly Checks							
*Storage tank level							
*Equipment placed in cabinets where possible							
GASOLINE DRIVEN EMERGENCY PUMP:							
a. Motor run for one hour on Saturdays							
b. Check level in gas tank							
c. Check radiator water level							
d. Check oil level							
e. Check water level in batteries							
f. Valve on pump opened to bleed off air							
Pool and Reactor sec. system readings logged							
All flashlights in control room and operating							
Corrosion experiment							
Degasifier in proper operation							
Check cold trap readings and service							
Hyd tube samples "in" and "out"							

** To be performed during shutdowns*

UCN-2275
(3 10-60)

Example 8.5.

Demineralizer--Reactor

The status of the unit is recorded as "In Use", "Ready", or "Being Regenerated".

Demineralizer--Pool

The status of the unit is recorded as "In Use", "Ready", or "Being Regenerated".

Third Floor Levels

Replace tools, remove debris, etc.

Weekly Checks

See Example 8.18, Section 8.1c. - 8.

Storage Tank Level

Note the levels as indicated on the control panel indicators.

Equipment Placed in Cabinets Where Possible

Check the "Daily Supplies" and "Emergency Supplies" cabinets to assure adequate stock.

Gasoline Driven Emergency Pump

(Self explanatory)

Reactor and Pool Secondary System Readings Logged

pH and chromate analysis of secondary systems taken and logged in the log book.

Reactor "on" Lights Checked

All "on" lights are to be burning when the reactor is operating. Any "on" lights which are burned out are to be replaced immediately.

Corrosion Experiment

Check the water level in the surge tank, water temperature, and the water flow to each test.

Degassifier in Proper Operation

Check the water level in the sight glass. The level should be higher than one-third of the glass but not above the glass.

Cold Traps, Read and Serviced

Add dry ice and/or make other necessary changes to the cold traps. Record the readings of the vacuum gauges on the purge lines.

Hydraulic Tube Samples "in" and "out"

Check for samples to be inserted or removed.

ORR Daily Water System Checks (Example 8.6)

This form is completed by the instrument mechanic making the instrument checks each day on the 8-4 shift.

Daily Routine Instrument Check List for ORR (Example 8.7.)

This form is completed by the instrument mechanic making the instrument checks each day on the 8-4 shift.

Daily Operating Condition, Graph (Example 8.8)

Data recorded on the "ORR Hourly Readings" data sheet are plotted each hour by the control desk operator. Data recorded graphically are instrument and heat power, outside temperature, reactor water inlet and exit temperatures, pool water inlet and exit temperatures, and shim rod readings.

Graph of Shim Rod Position vs Time (Example 8.9.)

The equalized rod position at 12:30 A.M. each day is plotted for one complete cycle. Any shutdowns are also indicated as well as the initial critical rod position at the beginning of a cycle.

ORR Daily Summary (Example 8.10.)

The Daily Summary is compiled from the daily check sheets. This summary is completed by, or under the direction of, the shift engineer on the

ORR DAILY WATER SYSTEM CHECKS

DAY	
OPERATOR	

REACTOR SYSTEM

			CONTROL ROOM	PUMP HOUSE
Tank ΔP	psi	Bypass filter flow (gpm)		
Tank top pressure	psi	Primary flow (gpm)		
Facility cooling flow	gpm	Reactor exit temp. °F		

North demineralizer flow gpm, Integrator ( ) X (1.5) = gallons

South demineralizer flow gpm, Intergrator ( ) X (1.5) = gallons

Strainer ΔP (inlet) – (exit) = psi

PRIMARY PUMPS		#1	#2	#3	SHUTDOWN	EMERGENCY
EXIT psi						
INLET psi						
MOTOR AMPS						
BEARING TEMP.	NORTH					
	SOUTH					

Secondary mean temperature °F | Pump exit (PI 56) psi | Return line (PI) psi

POOL SYSTEM

Primary flow	gpm	Secondary flow	gpm
DEMINERALIZER	Flow gpm	Integrator ( ) X (1.8) =	gallons

RECORDED IN LOG BOOK

SUMP COUNTS, DEMINERALIZER DATA

ALL MAIN PUMP DC BATTERY CELLS Sp G READ, LOWEST LOGGED

UCN-3496
(3 5-62)

Example 8.6.

DAILY SCRUBBER CHECKS

SUMP LEVEL	CAUSTIC TANK LEVEL
pH	SPECIFIC GRAVITY
TOTAL SOLIDS	

TURN # 1 ELECTRIC PUMP OFF. THE AIR-DRIVEN PUMP SHOULD COME ON. _____

CHECK WITH THE CONTROL ROOM. THE FOLLOWING ANNUNCIATORS SHOULD BE IN ALARM CONDITION:

PUMP # 1 FAILURE	EMERGENCY PUMP START

TURN # 1 ELECTRIC PUMP BACK ON TO CLEAR THE ALARM CONDITIONS. _____

TURN # 2 ELECTRIC PUMP OFF. THE AIR-DRIVEN PUMP SHOULD COME ON. _____

CHECK WITH THE CONTROL ROOM. THE FOLLOWING ANNUCIATORS SHOULD BE IN ALARM CONDITION.

PUMP # 2 FAILURE	EMERGENCY PUMP START

TURN # 2 ELECTRIC PUMP BACK ON TO CLEAR THE ALARM CONDITION. _____

IF THE TOTAL SOLIDS ANALYSIS IS GREATER THAN 1000 PPM, PURGE THE SYSTEM UNTIL THE SOLIDS DROP BELOW 1000 PPM. AIR PUMP OIL SUPPLY. _____

AIR PUMP OILER CHECKED AND OIL ADDED IF NECESSARY. _____

OTHER CHECKS

BEAM HOLE LINER AIR PURGE	LARGE FACILITY LEAK DETECTORS	POG BLOWER

Example 8.6. (continued)

DAILY ROUTINE INSTRUMENT CHECK LIST FOR ORR

DATE	TIME ☐ AM ☐ PM	INST. TECH.	SHIFT ENGINEER
HEAT POWER LEVEL ☐ kw ☐ Mw	CHARTS ON ALL RECORDERS	CHECK STD. MOTORS Model H	INK ON ALL RECORDERS
CHECK BATTERIES	PA SYSTEM CHECK	SOUND POWERED PHONES	

GAMMA CHAMBERS (% Power)		LOG N CHANNELS (% Power)		SAFETY CHANNEL RECORDERS (% Power)		
#1	#2	#1	#2	#1	#2	#3

Magnet Amplifiers	1	2	3	4	5	6		
A								
B								
Total								
Posted Op. I								

Sigma Amplifiers	#1 Safety	#2 Safety	#3 Safety	Period
Heat to Cath. St.				
B+ Unregulated				
B+ Regulated				
B+ Current				
Power (meter)				

CONDITION OF TROUBLE MONITORS

REMARKS

UCN-3666
(3 7-62)

Example 8.7.

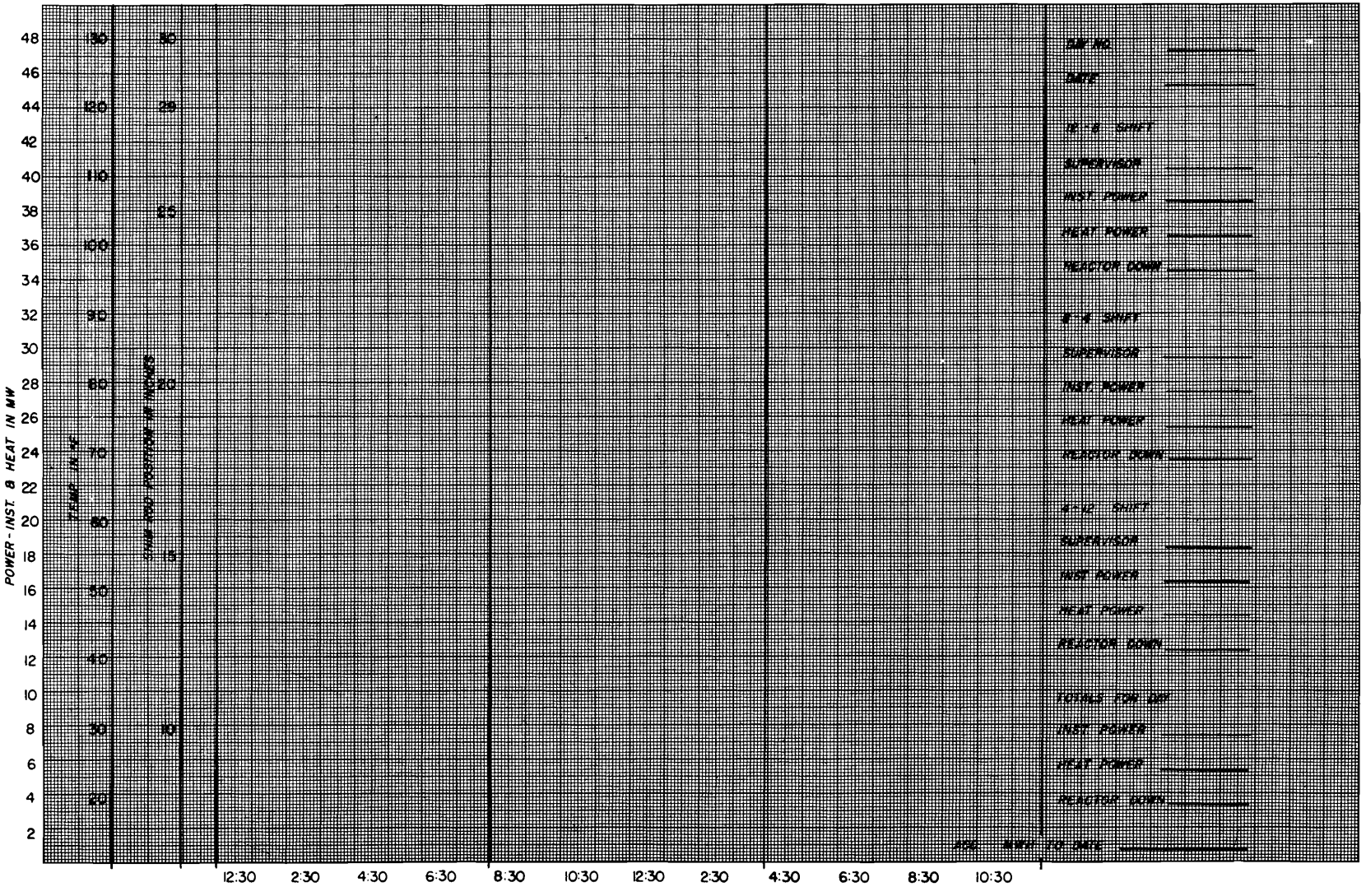
POWER - INST. & HEAT IN MW
48
46
44
42
40
38
36
34
32
30
28
26
24
22
20
18
16
14
12
10
8
6
4
2
TEMP. IN °C
130
120
110
100
90
80
70
60
50
40
30
20
SHIM ROD POSITION IN INCHES
30
25
20
15
10
5
12:30
2:30
4:30
6:30
8:30
10:30
12:30
2:30
4:30
6:30
8:30
10:30
DATE
8-12 SHIFT
SUPERVISOR
INST. POWER
HEAT POWER
REACTOR DOWN
8-4 SHIFT
SUPERVISOR
INST. POWER
HEAT POWER
REACTOR DOWN
4-12 SHIFT
SUPERVISOR
INST. POWER
HEAT POWER
REACTOR DOWN
TOTALS FOR DAY
INST. POWER
HEAT POWER
REACTOR DOWN

Example 8.8.

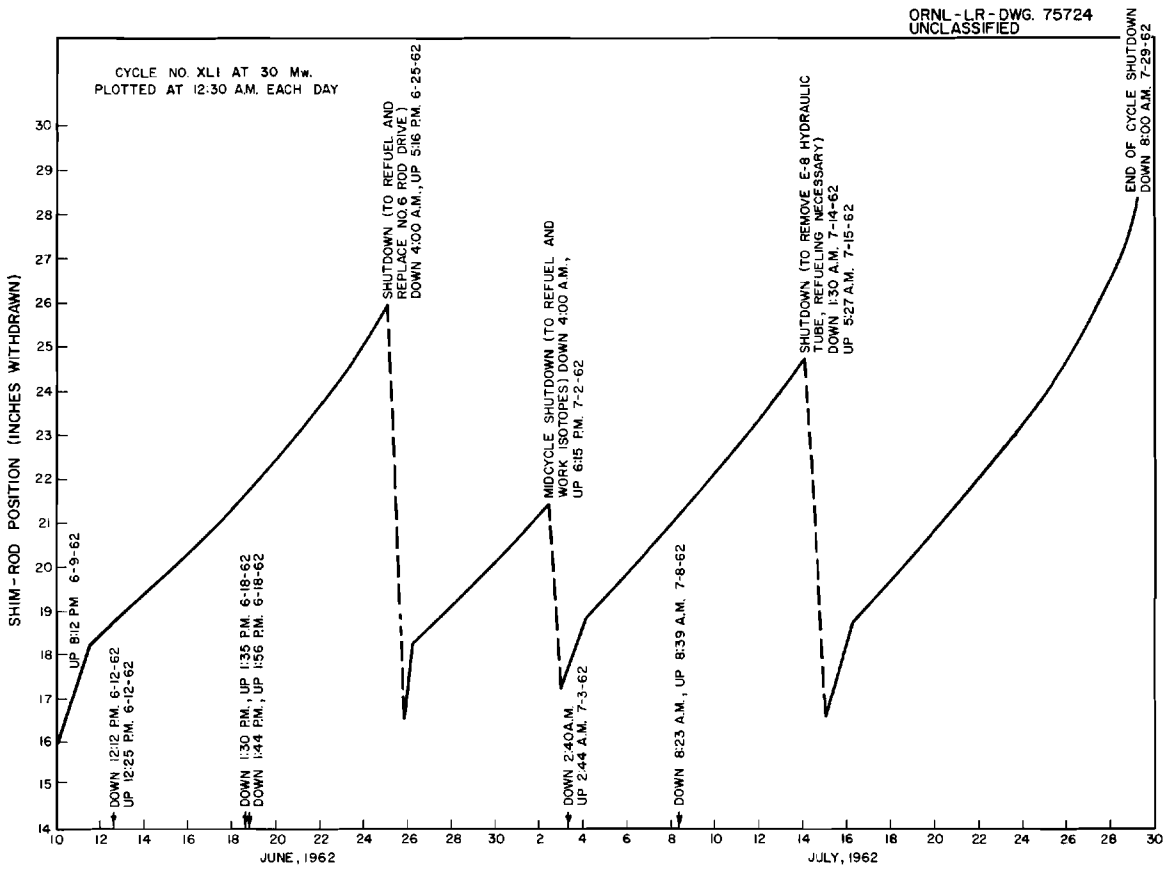

Example 8.9. Graph of Shim Rod Position versus Time

ORR DAILY SUMMARY

DAY NO.	DATE	ENGINEER

I POWER

Shift	Hrs. Op.	Hrs. Dn.	Mw Hrs. Inst.	Mw Hrs. Heat	Accum. (Inst.) Power Mw Hrs.
12 - 8					Previous Total
8 - 4					Day's Total
4 - 12					Current Total
Total					

II DEMINERALIZERS

	N. Reactor Dem. pH	N. Reactor Dem. Res.	N. Reactor Dem. c/m/ml	S. Reactor Dem. pH	S. Reactor Dem. Res.	S. Reactor Dem. c/m/ml		Pool Demineralizer pH	Pool Demineralizer Res.	Pool Demineralizer c/m/ml
Inlet							Inlet			
Exit							Cation			
Anion							Exit			
Cation										

Day's Throughput _____ Gal. Day's Throughput _____ Gal. Day's Throughput _____ Gal.

III COOLANT

	Reactor	Pool		Secondary Reactor	Secondary Pool
Inlet T	°F	°F	Time		
Exit T	°F	°F	pH		
Δt	°F	°F	CrO_4		
Max. pH/Res.			T.S.		
Min. pH/Res.			c/m/ml		

NOTE: *Use averages for the three shifts wherever possible.*

IV COMMENTS

UCN-1696
(3 8-60)

Example 8.10.

12-8 shift. The following is a detailed description of the data required for this summary.

1. Hours Operated - Hours Down

   These two columns are filled in from the data recorded on the "ORR Accumulated Instrument Power" data sheet.

2. Mwhr, Instrument

   This data is taken from the "ORR Accumulated Instrument Power" sheet and is the total instrument power accumulated by each shift.

3. Mwhr, Heat

   This is a record of the total heat power accumulated by each shift. The data comes from the "ORR Hourly Readings" sheets.

4. Accumulated Instrument Mwhr

   The accumulated power is found by adding the days total to the previous accumulated total.

5. Reactor and Pool Demineralizer Data

   This is a summary of the data recorded in the log book concerning the condition of the demineralizers.

6. Coolant

   This information is obtained both from information in the log book compiled from the water tests and by averaging the hourly temperature readings on the "ORR Hourly Readings" data sheet.

8.1c. Other Routine Report Forms

The following forms are used to record various checks and data. Most of them are self-explanatory so a detailed description will not be given. The forms are presented in the following sequence:

1. ORR Start-up Check List (Example 8.11.)

   All times on this list must be checked prior to each reactor startup or series of critical runs. The checks are made by the shift engineer.

2. Background Survey, (Example 8.12.)

   The areas indicated on this form should be monitored by Health Physics personnel after each reactor startup following an extended shutdown. A routine check is made, by Operations Division personnel, each Saturday on the 8-4 shift.

3. ORR Shutdown Check List (Example 8.13.)

   Items on the "ORR Shutdown Check List" should be completed after the reactor is shut down.

4. Beam Hole Status Sheet (Example 8.14.)

   Changes in the status of beam hole plugs and liners (filled, empty, on purge, etc.) should be recorded on this form by the shift supervisor who made the change.

5. ORR Replacement Loading (Example 8.15.)

   The replacement loading is prepared by the reactor supervisor. It is used only in the event the reactor is shut down and cannot be started due to xenon poisoning.

6. Experiment Safety Check Sheet (Example 4.2)

   The experiment safety sheet is filled out by the experimenter and checked by the reactor supervisor. This check must be made after the insertion of an experiment into the reactor and before the reactor is started.

7. Weekly Checks (Example 8.16.)

   These checks are performed each Saturday on the 4-12 shift.

TX-2694
(1-61)

ORR START-UP CHECK LIST

NOTE: Person making start-up checks initial each check after completion.

Date ___ ___ ___ ___ ___ ___ ___ ___

A. Tank Area

1. All core pieces in place and properly seated. ___ ___ ___ ___ ___ ___ ___ ___
2. Experiments properly arranged in reactor tank. ___ ___ ___ ___ ___ ___ ___ ___
3. Hold-down arms properly seated and locked. ___ ___ ___ ___ ___ ___ ___ ___
4. All work in core completed and final inspection made. ___ ___ ___ ___ ___ ___ ___ ___
5. Access cover replaced and bolted down. ___ ___ ___ ___ ___ ___ ___ ___

B. Experimental Facilities (At start of cycle)

1. All experimental changes completed. ___ ___ ___ ___ ___ ___ ___ ___
2. Experimental information sheets completed. ___ ___ ___ ___ ___ ___ ___ ___
3. Individual experiments safety check sheets completed by instrument engineers. ___ ___ ___ ___ ___ ___ ___ ___

C. Water Systems

1. Reactor pool filled to proper level. ___ ___ ___ ___ ___ ___ ___ ___
2. All pool alarms cleared. ___ ___ ___ ___ ___ ___ ___ ___
3. Pool circulating system ready for service. ___ ___ ___ ___ ___ ___ ___ ___
4. Pool demineralizer in service. ___ ___ ___ ___ ___ ___ ___ ___
5. Reactor system filled and vented. ___ ___ ___ ___ ___ ___ ___ ___
6. Reactor water flow established. ___ ___ ___ ___ ___ ___ ___ ___
7. Degasifier in service. ___ ___ ___ ___ ___ ___ ___ ___
8. Reactor demineralizer in service. ___ ___ ___ ___ ___ ___ ___ ___
9. Both secondary coolant loops filled, treated, and ready for service. ___ ___ ___ ___ ___ ___ ___ ___
10. Flow through bypass filters. ___ ___ ___ ___ ___ ___ ___ ___
11. Reactor primary bypass valve system in automatic and temperature setpoint established. ___ ___ ___ ___ ___ ___ ___ ___
12. Reactor secondary system in automatic, temperature setpoint established. ___ ___ ___ ___ ___ ___ ___ ___

Example 8.11.

13. Cooling water to horizontal beam holes (refer to status sheet). ___ ___ ___ ___ ___ ___ ___ ___

14. Cooling water to north facility. ___ ___ ___ ___ ___ ___ ___ ___

15. Cooling water to south facility. ___ ___ ___ ___ ___ ___ ___ ___

16. Subpile room:
    --Demineralized water supply to drive seals. ___ ___ ___ ___ ___ ___ ___ ___
    --Demineralized water supply to annulus of bottom plug. ___ ___ ___ ___ ___ ___ ___ ___
    --Demineralized water supply to fission chamber. ___ ___ ___ ___ ___ ___ ___ ___
    --Servo tachometer plug connected to servo rod drive motor. ___ ___ ___ ___ ___ ___ ___ ___

D. Instrumentation Checks (*Before start of cycle)

1. All utility services in order:
    --Power circuits L-31 through L-38 plus L-39 and L-41; located in front power cabinet. ___ ___ ___ ___ ___ ___ ___ ___
    --LX-1 through LX-6; located in front power cabinet. ___ ___ ___ ___ ___ ___ ___ ___
    --L-1 through L-12 plus L-14 and L-16; located in rear power cabinet. ___ ___ ___ ___ ___ ___ ___ ___
    --Air supply ___ ___ ___ ___ ___ ___ ___ ___

2. All nuclear instruments turned on at least 1/2 hour prior to operation of reactor. ___ ___ ___ ___ ___ ___ ___ ___

3. Ionization chamber positions. Check log book for any movement during shutdown. ___ ___ ___ ___ ___ ___ ___ ___

4. Log N calibrated and set on "operate". ___ ___ ___ ___ ___ ___ ___ ___

*5. Safety channels #1, #2, and #3 calibrated. ___ ___ ___ ___ ___ ___ ___ ___

*6. CRM calibrated by recorder, and set on "USE". ___ ___ ___ ___ ___ ___ ___ ___

*7. Rod-drive raise test performed following any work on the drive units. ___ ___ ___ ___ ___ ___ ___ ___

*8. Magnet drop current checked and adjusted properly. ___ ___ ___ ___ ___ ___ ___ ___

9. Rods raised off seat positions and scrammed with the Jordan button on each of the three sigma amplifiers in turn. ___ ___ ___ ___ ___ ___ ___ ___

Example 8.11. (continued)

10. Step 9 repeated but rods scrammed with Log N amplifier by turning switch from "Operate" to "HI Calibrate". (Reset to "Operate" position.) ____ ____ ____ ____ ____ ____ ____ ____

*11. Check any one experiment scram to insure rods drop. ____ ____ ____ ____ ____ ____ ____ ____

12. Air monitors "Normal". ____ ____ ____ ____ ____ ____ ____ ____

13. μμ ammeter range switch set properly. ____ ____ ____ ____ ____ ____ ____ ____

14. μμ ammeter set on "Recorder". ____ ____ ____ ____ ____ ____ ____ ____

15. PA system operating properly. ____ ____ ____ ____ ____ ____ ____ ____

16. All instrument channels working properly and corresponding recorders tracking. ____ ____ ____ ____ ____ ____ ____ ____

E. Other Checks

1. Next cycle power schedule reviewed and understood. ____ ____ ____ ____ ____ ____ ____ ____

2. Both water activity electrometers operating. (Also common power supply) ____ ____ ____ ____ ____ ____ ____ ____

3. Scrubber checked and operative. ____ ____ ____ ____ ____ ____ ____ ____

4. Establish flow in the hydraulic tubes. ____ ____ ____ ____ ____ ____ ____ ____

5. Ten-minute pre-startup warning issued over PA system. ____ ____ ____ ____ ____ ____ ____ ____

6. At 5 Mw, inspect the core through the porthole for obstructions. ____ ____ ____ ____ ____ ____ ____ ____

Example 8.11. (continued)

F. Shielding Checks

*1.	HB-1 through HB-5 shield blocks in place	___	___	___	___	___	___	___	___
*2.	HB-6 shield closed and key in possession of Operations	___	___	___	___	___	___	___	___
3.	HN shielding in place	___	___	___	___	___	___	___	___
4.	HS shielding and monitrons in place and checked	___	___	___	___	___	___	___	___
5.	Pipe chase closed	___	___	___	___	___	___	___	___

*Or collimator flooded with water valves locked open

G. Checks on Count Rate Channels

1.	Pool side fission chamber inserted	___	___	___	___	___	___	___	___
2.	Pool side count rate speaker activated and working	___	___	___	___	___	___	___	___

TX-2694

Example 8.11. (continued)

BACKGROUND SURVEY

PERFORMED BY	REASON	DATE	TIME

NOTE: This Survey is to be performed each Saturday and after the startup of the reactor at the beginning of a cycle. A survey meter (G-M Counter) shall be used for this Survey, with a Cutie Pie used when survey meter goes off scale.

AREA		mr/hr MAXIMUM BACKGROUND	mr/hr PRE-SET LOCATION
1 POOLS:			
a. East	TAKEN AT SURFACE NEAR POOL WALLS		
b. Center			
c. West			
d. Top of Bridge			
e. Above Hydraulic Tube			
2. HOT CELL:			
a North Cell			
1. Window			
2. Access Holes (Not Including Top of Cell)			
3. Walls (Up To Height of 6 Feet)			
b. South Cell			
1. Window			
2. Access Holes (Not Including Top of Cell)			
3. Walls (Up To Height of 6 Feet)			
3. WALKWAYS:			
a. Third Level, South			
b. Third Level, North			
c. Second Level, South			
d. Second Level, North			
e. Second Level, West			
f. First Level, South			
g. First Level, East			
h. First Level, North			
i. First Level, West			
4. EXPOSED EXPERIMENTAL EQUIPMENT (PIPING, ETC.) ON 2nd. LEVEL BALCONY:	NORTH		
	SOUTH		
5. FACILITIES:			
a. North Facility			
b. South Facility			
c. HB-1			
d. HB-2			
e. HB-3			
f. HB-4	1		
	2		
g. HB-5			
h. HB-6			
6. BASEMENT:			
a. Pipe Tunnel			
b. Sub-Pile Room Door			
1. Near Reactor Bottom Plug			
c. North Walkway			
d. South Walkway			
e. Pool Heat Exchanger Area			
f. Beam Hole Plug Storage Area			

UCN-2276
(3 11-60)

Example 8.12.

	mr/hr	
AREA	MAXIMUM BACKGROUND	PRE-SET LOCATION
6. BASEMENT (Continued)		
g. Degasifier		
1. Air Separator		
2. Water Tank		
h. Pneumatic Tube Laboratory		
i. Reactor North Demineralizer		
1. Anion		
2. Cation		
3. Mixed Bed		
j. Reactor South Demineralizer		
1. Anion		
2. Cation		
3. Mixed Bed		
k. Pool Demineralizer		
1. Anion		
2. Cation		
7. PUMP HOUSE:		
a. #1 Pump Cell		
b. #2 Pump Cell		
c. #3 Pump Cell		
d. Shutdown Pump (Electric) Cell		
e. Emergency Pump (Gasoline) Cell		
8. REACTOR HEAT EXCHANGER PIT:		
a. Entrance		
b. North Side of Pit		
c. South Side of Pit		
9. REACTOR WATER ACTIVITY		
10. POOL WATER ACTIVITY		
11. SUMP COUNTS		
a. #5 (Decay Tank)	c/m/ml	
b. #4E (Expansion Pit)	c/m/ml	
c. #4W (Expansion Pit)	c/m/ml	
d. #6 (3042)	c/m/ml	

Example 8.12. (continued)

ORR SHUTDOWN CHECK LIST Date _____

Initial

_____ 1. Scram handle in "scram" position.

_____ 2. Key switch in "off" and key removed.

_____ 3. All rods in seat position and seat lights "on".

_____ 4. All rod mode switches in "off" position.

_____ 5. Servo demand at N_L.

6. After 30-Mw operation:

_____ A. Continue normal circulation of reactor water for 30 min or until the temperature of the reactor water is equal to the pool temperature; i.e., 78°F < outlet temperature < 100°F.

_____ B. Complete the "test" on emergency cooling units (end-of-cycle shutdowns only).

_____ C. Unit #1
_____ Unit #2 } Check to determine that DC motors turn the pumps after AC motors are stopped.
_____ Unit #3

_____ D. Unit #1
_____ Unit #2 } "Charger-battery" disconnects closed.
_____ Unit #3

_____ E. Unit #1
_____ Unit #2 } "Battery-motor" disconnects opened.
_____ Unit #3

7. Reactor secondary loop.

_____ A. Fans in "off".

_____ B. Pumps in "off".

_____ C. Blow-down valves closed.

_____ D. Acid addition system "off".

8. Pool secondary loop.

_____ A. Fan in "off".

_____ B. Pump in "off".

_____ C. Blow-down valve closed.

_____ D. Acid addition in "off".

_____ 9. Main pumps "off".

_____ 10. Shutdown pump "on".

_____ 11. Main pump test blocks removed.

_____ 12. Channel #1
_____ Channel #2 } Log-N amplifiers on ground position.

_____ 13. Subpile fission chamber inserted to give 20 cps.

_____ 14. Pool-side fission chamber inserted to give 20 cps.

_____ 15. CRM speaker at pool-side activated.

Example 8.13.

BEAM HOLE STATUS SHEET

Oak Ridge Research Reactor

Date	Shift	*HB-1		*HB-2		*HB-3		*HB-4		*HB-5		*HB-6	
		Plug	Liner	Plug	Liner	Plug	Liner	Plug	Liner	Plug	Liner	Plug	Liner

*Indicate status: Ex. H_2O, He, MT, etc.

Example 8.14.

ORR REPLACEMENT LOADING

PURPOSE: ☐ SCHEDULED RELOADING
☐ UNSCHEDULED RELOADING

ENDING CYCLE

BEGINNING CYCLE

PREPARED BY

DATE:

	ELEMENTS REMOVED		CHANGE IN	ELEMENTS INSERTED		
CORE POSITION	OR NUMBER	WEIGHT U^{235}	WEIGHT U^{235}	OR NUMBER	WEIGHT U^{235}	LOCATION
REMARKS:	**SUBTOTAL**					
	SHIM RODS					
	OTHER UNITS					
	TOTAL					

UCN-2274
(3 3-82)

DO NOT BOLT DOWN ORR ACCESS COVER UNTIL A CRITICALITY RUN HAS BEEN MADE

Example 8.15.

WEEKLY CHECKS

Check if "OK" Date _____

_____ 1. Underwater lights check
_____ 2. Secondary system supplies, check and reorder
_____ 3. Pool tools check
4. "Teletalk" system check
_____ A. Room 307
_____ B. Room 305
_____ C. Room 303
_____ D. Room 301
_____ E. North side of pool (Clear contact must be established)
_____ F. South side of pool (between the control and the point)
_____ G. Health Physics Office (in question. The ability of the)
_____ H. Second floor, west (control room to contact each area)
_____ I. First floor, north (should be tested as well as the)
_____ J. First floor, south (reverse condition.)
_____ K. Subpile room
_____ L. Outside subpile room door
_____ M. Pipe tunnel
_____ N. Reactor pump house
_____ O. Reactor secondary pump house
_____ P. F-2 control room
_____ Q. Trane Coolers
5. PA system check
_____ A. Third level
_____ B. Second level
_____ C. Toilets in 3042 Building
_____ D. First level (A man should be able to hear the)
_____ E. Basement (PA clearly and distinctly in any)
_____ F. Area outside northeast corner of building (and all of the locations listed.) (Calls should be made from all)
_____ G. Pump house (Operations Division microphones.)
_____ H. Storage tank area
_____ I. Reactor heat exchanger area
_____ J. Cooling tower area
_____ 6. Run emergency gasoline pump one hour.
_____ 7. Check the area for loose gas cylinders and compile a list of those for the log; give locations.
_____ 8. Clean the two reactor models on the second floor southwest.
9. Scrubber teletalk

TX-2588
(11/60)

Example 8.16

8.1d. Information Required in the Log

An important duty of the shift engineer is to make a written record of the shift activities in the log book. In order for this report to give a complete account of all activities, a standard format is used, and is as follows:

(Day No.)

I - Operations: (Time at Power Only)

II - Shutdowns:

A. 1. (hour) (cause)

2.

Total

B. (Work on Long Shutdown)

III - Troubles:

IV - Routine Checks:

A. - (Secondary Loop)

B. - (Cold Traps)

C. - (Miscellaneous)

V.- Maintenance:

A. - (Water Systems)

B. - (Reactor Controls)

C. - (Experiments)

VI - Service to Research:

VII - Irradiated Samples: (Hydraulic tube, gamma grid)

VIII - Miscellaneous:

NOTE: Downtime is defined as any power level below N_L on the log N recorder and operating time is defined as any power at N_L or greater on the log N recorder.

In addition to the above mentioned items, additional information is recorded in the back of the log book. This information is obtained during the performance of the normal shift checks and includes data on the d-c. units, power accumulation, reactor and pool demineralizers, reactor and pool secondary water conditions, and sump water activity.

8.2. Data Summation

8.2a. ORR Weekly Report Form (Example 8.17.)

The ORR Weekly Report is completed each Monday on the 12-8 shift by the shift engineer. It summarizes and averages the operating data collected during the previous week. Most of the data required is taken from the "ORR Daily Summary". Additional general information on troubles experienced, maintenance work performed, and experimental changes is obtained from the supervisor's log book.

8.2b. The Quarterly Report

Operations Division publishes a compilation of reports from all departments each quarter. The report from Reactor Operations Department includes operating information from each reactor. A typical report from the ORR includes:

1. Information on Accumulated Power
2. Time Operating
3. Water Analysis
4. Cycles of Operation
5. Analysis of Scheduled Shutdowns
6. Analysis of Unscheduled Shutdowns
7. Analysis of Reactor Controls
8. Facility Assignment
9. Individual reports of studies made by members of Operations Technical Department

ORR WEEKLY REPORT

FOR WEEK ENDING

A. COOLING WATER *(ITEMS 1-4 MEASURED AT DEMINERALIZER INLET)*	REACTOR	POOL
1. MAXIMUM pH AND RESISTANCE FOR WEEK		
2. AVERAGE pH AND RESISTANCE FOR WEEK		
3. MINIMUM pH AND RESISTANCE FOR WEEK		
4. AVERAGE GROSS GAMMA ACTIVITY c/m/ml		
5. DATE OF LAST CHANGE OF FILTERS	*EAST*	
	WEST	
6. AVERAGE WATER TEMPERATURE (°F)		
a. EXIT		
b. INLET		
c. ΔT		

B. REACTOR CONTROL SYSTEM *(LIST CHANGES, MODIFICATIONS, TROUBLE, ETC.)*

UCN-2202
(3 1-61)

Example 8.17.

Page 2

C. OPERATING DATA *(FROM LOG BOOK)*

MWH AT END OF WEEK	
MWH AT BEGINNING OF WEEK	
MWH FOR WEEK	
MWD FOR WEEK	

DATE	DAY NO.	ACC. ENERGY -- MWH		HOURS OPERATED	HOURS DOWN	NO. OF SHUTDOWNS	
		INSTRUMENT	HEAT			SCHEDULED	UNSCHEDULED
TOTAL							

D. DEMINERALIZER DATA

COLUMN	RUN NO.	DATE STARTED/ ENDED	TOTAL THROUGH-PUT IN RUN (GALLONS)	AVERAGE c/m/ml		AVERAGE SPECIFIC RESISTANCE & pH	
				INLET	OUTLET	DEMINERALIZER INFLUENT	DEMINERALIZER EFFLUENT
REACTOR							
N. CATION							
N. ANION							
N. MIXED BED							
S. CATION							
S. ANION							
S. MIXED BED							
POOL							
CATION							
ANION							

Example 8.17. (continued)

Page 3

E. SHUTDOWNS

1. SCHEDULED

DATE	DURATION (HR)	REMARKS
TOTAL HOURS		

2. UNSCHEDULED

DATE	DURATION (HR)	REMARKS
TOTAL HOURS		

3. TOTAL DOWNTIME, SCHEDULED AND UNSCHEDULED _____ HOURS

F. FACILITY CHANGES

FACILITY	DATE IN	DATE OUT	NATURE OF EXPERIMENT	SPONSOR

Example 8.17. (continued)

DISTRIBUTION

1-50. J. A. Cox

51. W. R. Casto

52. M. E. Ramsey

53. A. F. Rupp

54. W. H. Tabor

55-56. Central Research Library (CRL)

57. Document Reference Section (DRS)

58-60. Laboratory Records (LRD)

61. Laboratory Records - Record Copy (ORNL-RC)

62. ORNL Patent Office

63-77. Division of Technical Information Extension (DTIE)

78. Research and Development Division (ORO)

79-279. Orsort