MASTER COPY

OAK RIDGE NATIONAL LABORATORY
operated by
UNION CARBIDE CORPORATION
for the
U. S. ATOMIC ENERGY COMMISSION

ORNL-TM-576

COPY NO. - 4

DATE - May 23, 1963

CALCULATION OF THREE-VECTOR FORCE SYSTEM ON ORR CONTROL ROD BALL LATCH MECHANISM WITH PARAMETRIC BOUNDARY CONDITION SOLUTIONS FOR OPTIMIZATION OF BALL LATCH REDESIGN

J. Foster

ABSTRACT

A generalized system of equations has been developed and solved to define the direction and magnitude of all forces acting on the balls in the ORR control rod ball latch. All nine design parameters are treated as variables to identify the design which minimizes P', the force between the balls and the ball plunger. Binding between these components has been identified in earlier studies[1,2] as the cause of failures to scram.

Development of a specific new ball latch mechanism design using these P' values with their associated angles and within the restrictive conditions imposed by the existing drive tube and shim rod diameters requires that depths of ball engagement to both latch head and shim rod be evaluated parametrically as functions of γ, the shim rod shoulder angle, and ball radius. These parameters are calculated and applied as boundary conditions to the solutions of the force system equations. The results are interpreted in terms of physical design requirements and define the geometry of a redesigned ball latch mechanism for any selected set of friction conditions.

NOTICE

This document contains information of a preliminary nature and was prepared primarily for internal use at the Oak Ridge National Laboratory. It is subject to revision or correction and therefore does not represent a final report. The information is not to be abstracted, reprinted or otherwise given public dissemination without the approval of the ORNL patent branch, Legal and Information Control Department.

LEGAL NOTICE

This report was prepared as an account of Government sponsored work. Neither the United States, nor the Commission, nor any person acting on behalf of the Commission:

A. Makes any warranty or representation, expressed or implied, with respect to the accuracy, completeness, or usefulness of the information contained in this report, or that the use of any information, apparatus, method, or process disclosed in this report may not infringe privately owned rights; or

B. Assumes any liabilities with respect to the use of, or for damages resulting from the use of any information, apparatus, method, or process disclosed in this report.

As used in the above, "person acting on behalf of the Commission" includes any employee or contractor of the Commission, or employee of such contractor, to the extent that such employee or contractor of the Commission, or employee of such contractor prepares, disseminates, or provides access to, any information pursuant to his employment or contract with the Commission, or his employment with such contractor.

A system of equations has been developed for the calculation of the directions and magnitudes of the forces acting on the three ball contact points in the ORR control rod ball latch mechanism. These equations have been generalized to permit solutions for any variation of any of the ball contact surface angles, for any combination of friction factors at the three ball-to-surface contact points, and for any load applied by the shim rod to the ball system. These solutions are independent of the ball size. A second system of equations has been developed and solved to establish the boundary conditions imposed by fixed dimensions of the present ORR system. These two sets of parametric solutions define a new ball latch design which conforms to the restrictions imposed by existing geometry.

The present ball latch contains eight balls which theoretically equally divide the load imposed by the shim rod. To study cases in which only certain balls are presumed to be carrying the load or designs for more or less than eight balls, the total load imposed by the shim rod may be divided according to the desired condition of load distribution between balls by selecting the input force per ball accordingly. The total input force, F, acting vertically down on the ball latch system is the sum of the net submerged weight of the shim rod plus the hydraulic force applied in the vertical downward direction to the shim rod as a consequence of the hydraulic pressure gradient across the system.

The original studies by the writer[1,2] established that the fundamental cause of the failure-to-scram problem was a frictional force between the balls and plunger which was shown to be capable of holding the shim rod in the latched position even with no supporting force from the magnet and with the 55-lb release spring force acting against the system. It was concluded and stated in these early studies that the angle of the ball contact surface on the plunger was critical and that a steeper angle than the 6-deg surface would be required to eliminate the failure-to-scram problem. For these

and other reasons it became apparent that solutions of the force system for a variety of ball contact surface angles, not only on the plunger but also on the shim rod shoulder and latch head, should be developed. These are required not only for the relatively simple cases in which a frictionless system of ball-to-surface contacts is assumed but also for the more difficult and analytically useful cases in which the equivalent friction factors at each of the three ball-to-surface contact points are taken into account. The development of the system of equations presented herein was undertaken to meet this need. The large number of solutions which can be obtained by machine calculation can be plotted to show the relationships between the large number of variables involved. Such plots permit selection of surface angles that yield the desired distribution of forces. Since these parameters are functions of the friction factors prevailing at the various surfaces, a test stand has been constructed and is being used to obtain data for the determination of friction factors. Solutions of these systems of equations provide the complete parametric analytical description of the ball latch system required to optimize the ball latch design for whatever friction factors are found to prevail.

Description of Physical System — First System of Equations

The general arrangement of the physical system to be analyzed in the first system of equations is shown in Fig. 1. A short downward motion of the plunger is sufficient to retract the balls and permit the shim rod to drop. The plunger is supported at the bottom of the push rod by a magnet strong enough to support the shim rod and plunger system and also to offset the downward 55-lb force of a release spring acting on the push rod. The problem has been that de-energizing of the magnet is not always followed by immediate release (downward travel) of the plunger to permit shim rod release.

ORNL-LR-Dwg. 65216
Unclassified

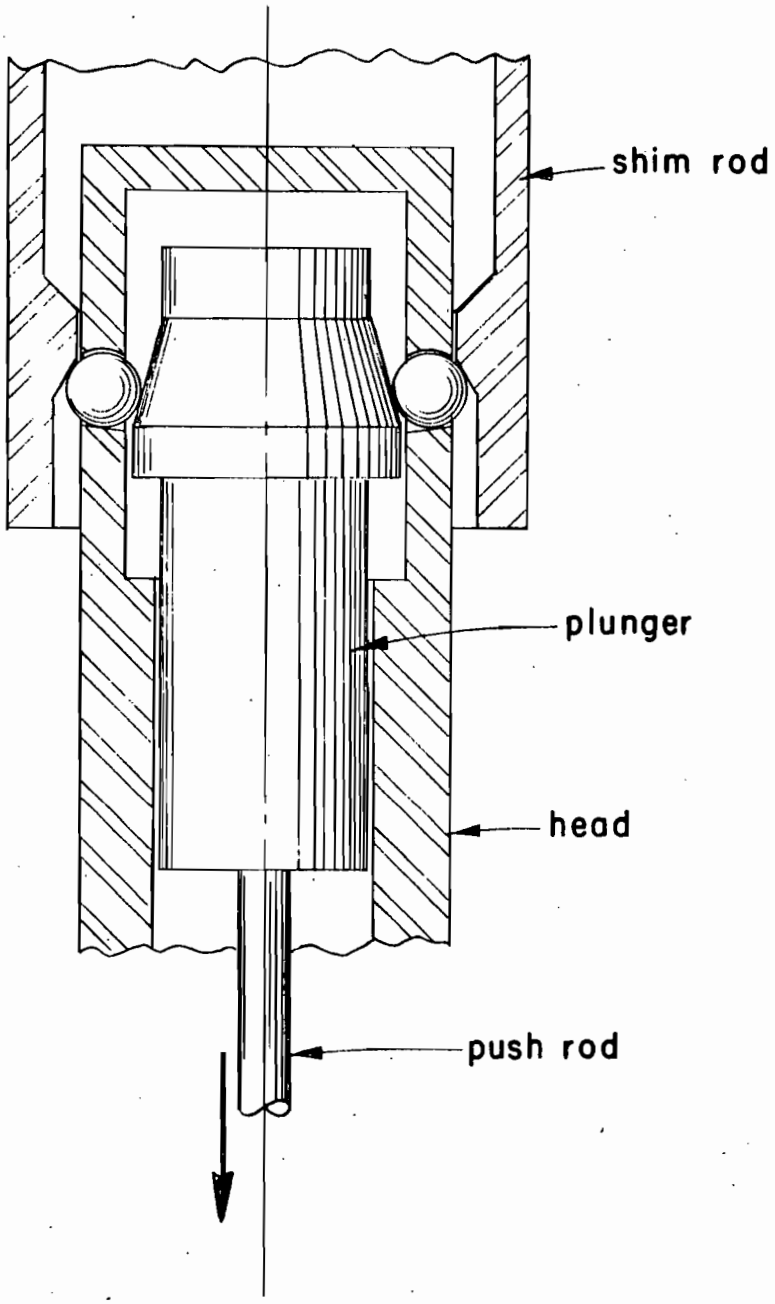

FIG. 1 SCHEMATIC ARRANGEMENT OF CONTROL ROD RELEASE BALL LATCH.

In such cases, the action of the balls on the plunger has overcome the 55-lb downward spring force and other forces acting on the plunger and prevented shim rod release when a rod scram was called for.

Analytical Model

The forces acting on a ball in the latch of Fig. 1 are shown in Fig. 2. The forces prevailing in a static system are those of interest, and for such a system, vectors f', P', and H' must form a closed force triangle. For a frictionless system in which coefficients of friction μ are equal to zero, the three vectors f, P, and H must form a closed force triangle, and each of these three vectors passes through the center of the ball. Table I lists the nomenclature for Figs. 2 and 3. Figure 3 is included as an aid in visualizing the force system as angle α is allowed to increase and exceed θ.

Analytical Relationships

If — for a given set of values for α, β, and γ — a set of values for F, μ_F, and μ_P is either given or assumed as independent input conditions, values of f' and P' are determined as dependent vector quantities. With both f' and P' fixed and the further condition that a solution is required for a static system, there is a single vector H' which represents the required static solution. The magnitude of vector f' is calculated from the relationship:

$$f' = \frac{F}{\cos \phi \, [\sin \gamma + \mu_f \cos \gamma]} \tag{1}$$

The magnitude of vector P' is determined by the relationship:

$$P' = \frac{F \, [\mu_f \, \{1 + \sin (\gamma - \beta)\} - \cos (\gamma - \beta)]}{\cos \theta \, [\sin \gamma + \mu_f \cos \gamma][\mu_P \, \{1 + \sin (\beta - \alpha)\} - \cos (\beta - \alpha)]} \tag{2}$$

ORNL-LR-Dwg. 65217
Unclassified

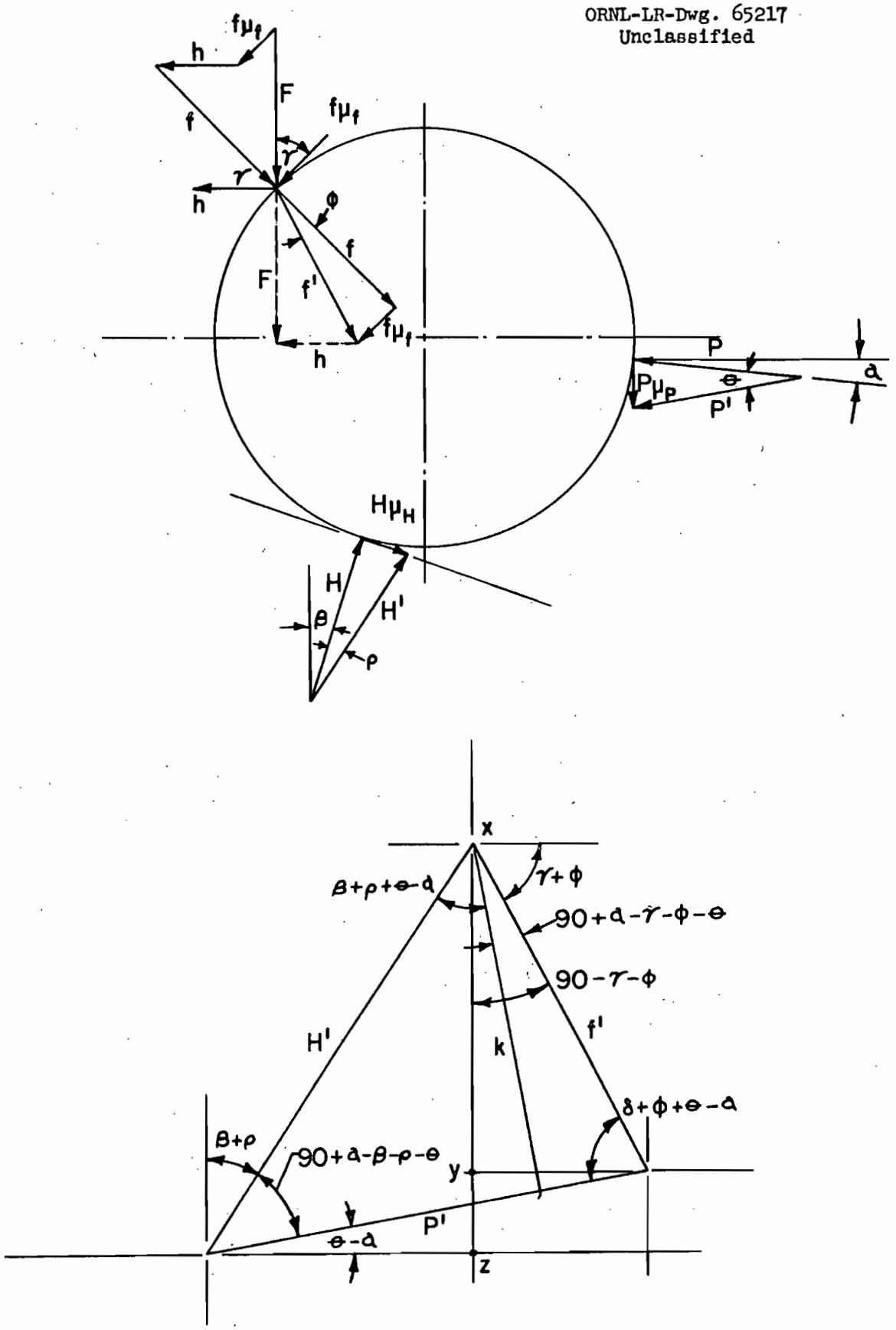

FIGURE 2

TABLE I

Nomenclature for Figs. 2 and 3

F	Vertical force imposed upon the balls by the shim rod, lb
f	Component of F acting perpendicular to ball surface, lb
f'	Resultant of f and $f\mu_f$, lb
$f\mu_f$	Friction force between shim rod and ball, lb
h	Horizontal component of F when F is resolved into f, $f\mu_f$, and h, lb
H	Force acting perpendicular to ball cage hole in head at point of ball contact, lb
H'	Resultant of H and $H\mu_H$, lb
$H\mu_H$	Friction force between ball cage and ball, lb
k	Length of perpendicular to P′ passing through X, lb
P	Force acting perpendicular to plunger at point of ball contact, lb
P'	Resultant of P and $P\mu_P$, lb
$P\mu_P$	Friction force between ball and plunger, lb
α	Angle of ball contact surface on plunger from vertical or angle between P and horizontal, deg. α is zero when P is horizontal and increases positively as P assumes increasing negative slopes in Figs. 2 and 3
β	Angle of ball contact surface on head from horizontal or angle between H and vertical, deg. β is zero when H is vertical and increases positively as H assumes decreasing positive slopes in Figs. 2 and 3
γ	Angle of ball contact surface on shim rod from vertical or angle between f and horizontal, deg. γ is zero when f is horizontal and increases positively as f assumes increasing negative slopes in Figs. 2 and 3
ϕ	Arctan μ_f
θ	Arctan μ_P
ρ	Arctan μ_H

TABLE I (continued)

μ_f	Coefficient of friction between ball and shim rod, $\tan \phi = \mu_f$
μ_H	Coefficient of friction between ball and head, $\tan \rho = \mu_H$
μ_P	Coefficient of friction between ball and plunger, $\tan \Theta = \mu_P$

ORNL-LR-Dwg. 65218
Unclassified

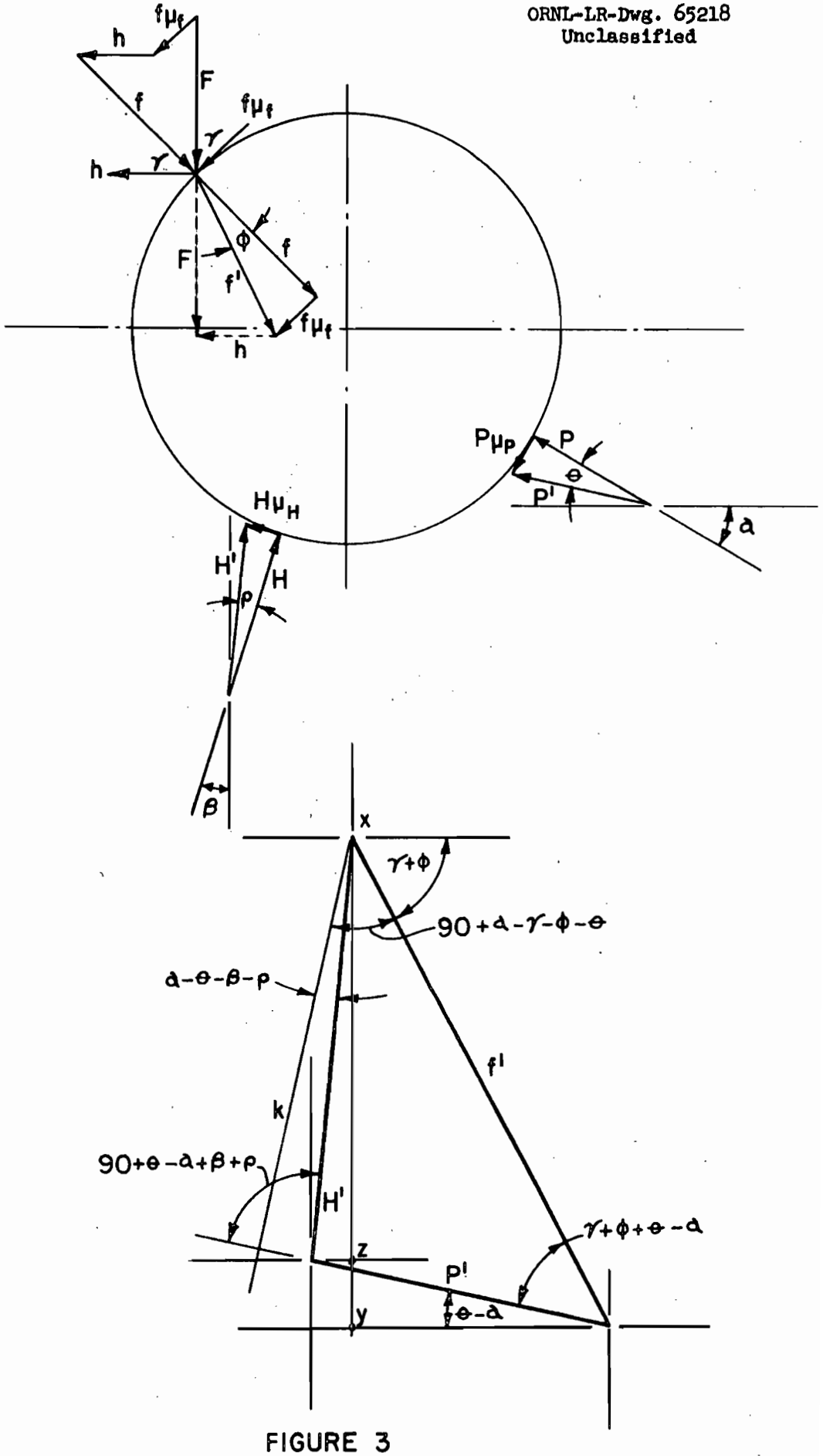

FIGURE 3

The angle $(\beta + \rho)$ is determined by solving Eq. 3. Since β is known for any given case, ρ is determined.

$$\text{Tan}\,(\beta + \rho) = \left[\frac{\sin(\alpha - \gamma - \phi - \theta)}{\sin(\gamma + \phi) + \frac{P'}{f'}\sin(\theta - \alpha)} + \cos(\theta - \alpha)\right]\frac{1}{\sin(\theta - \alpha)} \tag{3}$$

The value of ρ so determined is then substituted in Eq. 4 to determine the magnitude of H'.

$$H' = \frac{-f'\sin(\alpha - \gamma - \phi - \theta)}{\cos(\beta + \rho + \theta - \alpha)} \tag{4}$$

Results — First System of Equations

Three sets of five cases have been solved. The code, which is available for solution of any other combinations of the variables, has been identified as "Rod Drive". In all cases a total force, F, of 290 lb was considered to be shared equally by the eight balls in the latch, and P' was calculated as a function of α as α varied from 0 to 45 deg.

		Case 1	Case 2	Case 3	Case 4	Case 5
Set 1	β	15°	15°	15°	15°	15°
	μ_f	0	0.10	0.10	0.20	0.20
	μ_P	0	0.10	0.20	0.10	0.20
Set 2	β	17.5°	17.5°	17.5°	17.5°	17.5°
	μ_f	0	0.10	0.10	0.20	0.20
	μ_P	0	0.10	0.20	0.10	0.20
Set 3	β	20°	20°	20°	20°	20°
	μ_f	0	0.10	0.10	0.20	0.20
	μ_P	0	0.10	0.20	0.10	0.20

Figure 4 displays the results of set 2 as a family of "carpet" plots. Each carpet is the locus of all points corresponding to one of the five cases of set 2 above. All points on all carpets may be read directly against the P' scale. These same curves have been plotted two-dimensionally in Fig. 5.

The primary interest in the results displayed in Figs. 4 and 5 is the combinations of design parameters which yield low values of P'. These results indicate that, for the ideal frictionless case, α must increase to 17.5 deg to achieve the minimum P', and for all cases with friction considered α should be even higher. In the ORR the present plunger angle is 6 deg. Although in most cases P' does not vary as a strong function of α, it is significant to observe that it is most sensitive to changes in α for the case in which the friction between the ball and plunger is higher than that between the ball and the shim rod shoulder. These same figures show that P' decreases rapidly as the shim rod shoulder angle, γ, increases. Using the data for the frictionless case for demonstration, Fig. 6 indicates that the present design with a 6-deg plunger and 45-deg shim rod shoulder develops forces of $P = 46.5$ lb and $H = 32.9$ lb per ball, whereas increasing the shim rod shoulder angle to 60 deg would change the values to $P = 31.5$ lb and $H = 34.6$ lb. Thus, in this example, a change in γ of 15 deg has reduced the critical load P by about 30%.

The machine-calculated data include all the values of H' corresponding to those for P' plotted in Figs. 4 and 5. Two additional sets of values of P' and H' were also calculated, one complete set for $\beta = 15$ deg and one complete set for $\beta = 20$ deg with the other parameters covering the same ranges as for the case for $\beta = 17.5$ deg. These data have not been tabulated or plotted to minimize the bulk of this report.

ORNL-LR-Dwg. 65219
Unclassified

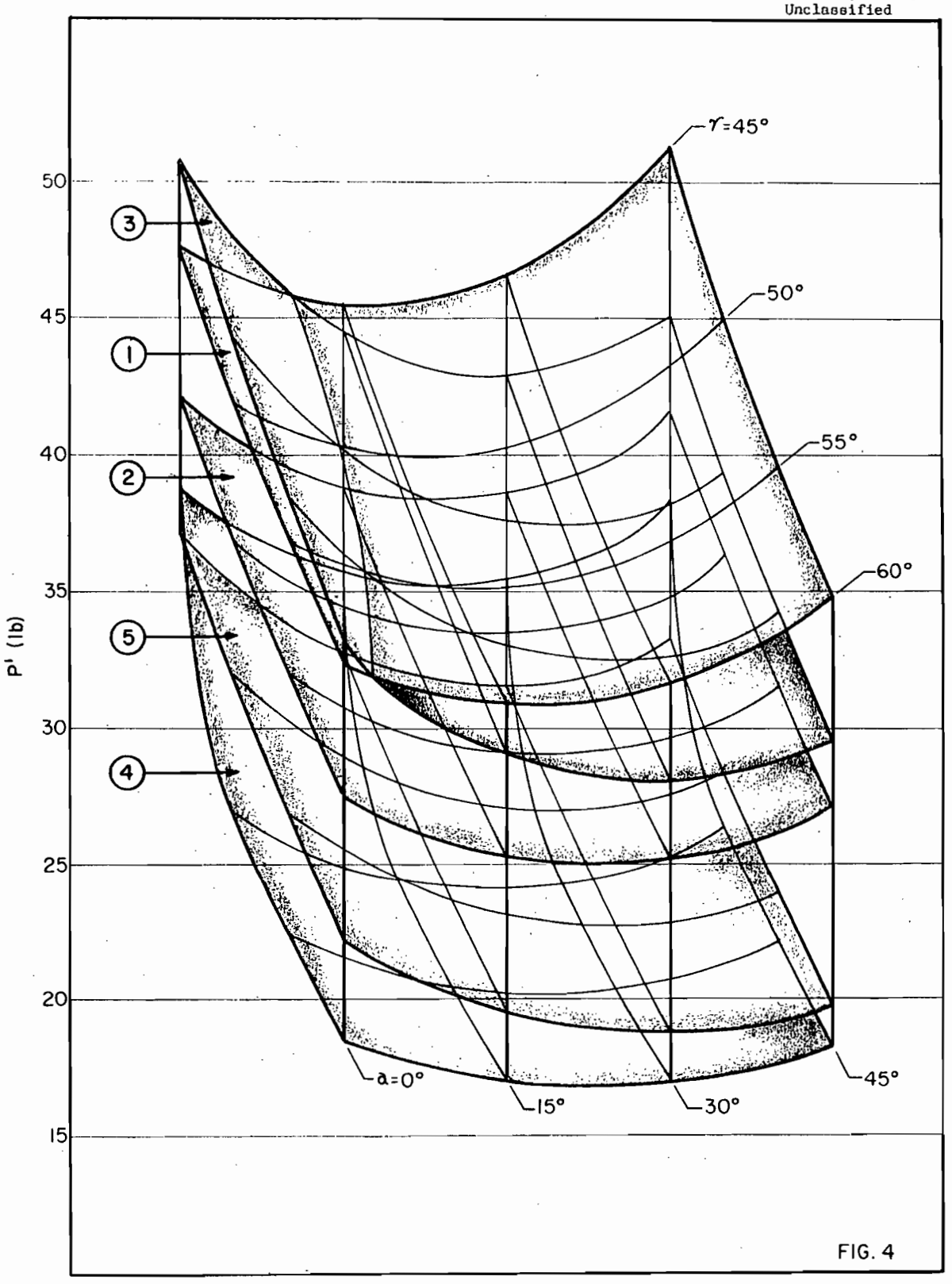

FIG. 4

① $\mu_f = 0$, $\mu_p = 0$

② $\mu_f = 0.10$, $\mu_p = 0.10$

③ $\mu_f = 0.10$, $\mu_p = 0.20$

④ $\mu_f = 0.20$, $\mu_p = 0.10$

⑤ $\mu_f = 0.20$, $\mu_p = 0.20$

ORNL-LR-Dwg. 65220
Unclassified

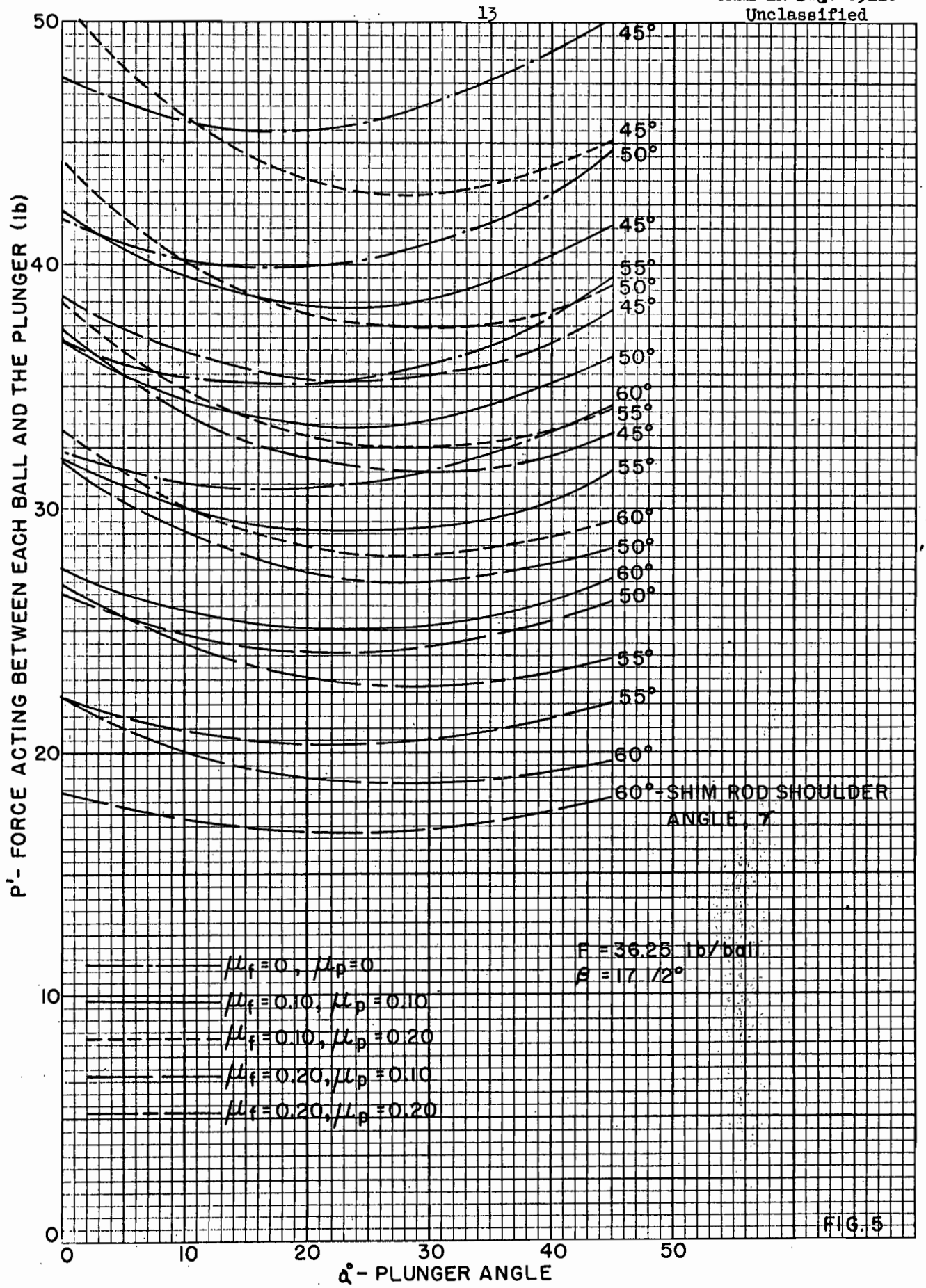

FIG. 5

ORNL-LR-Dwg. 65221
Unclassified

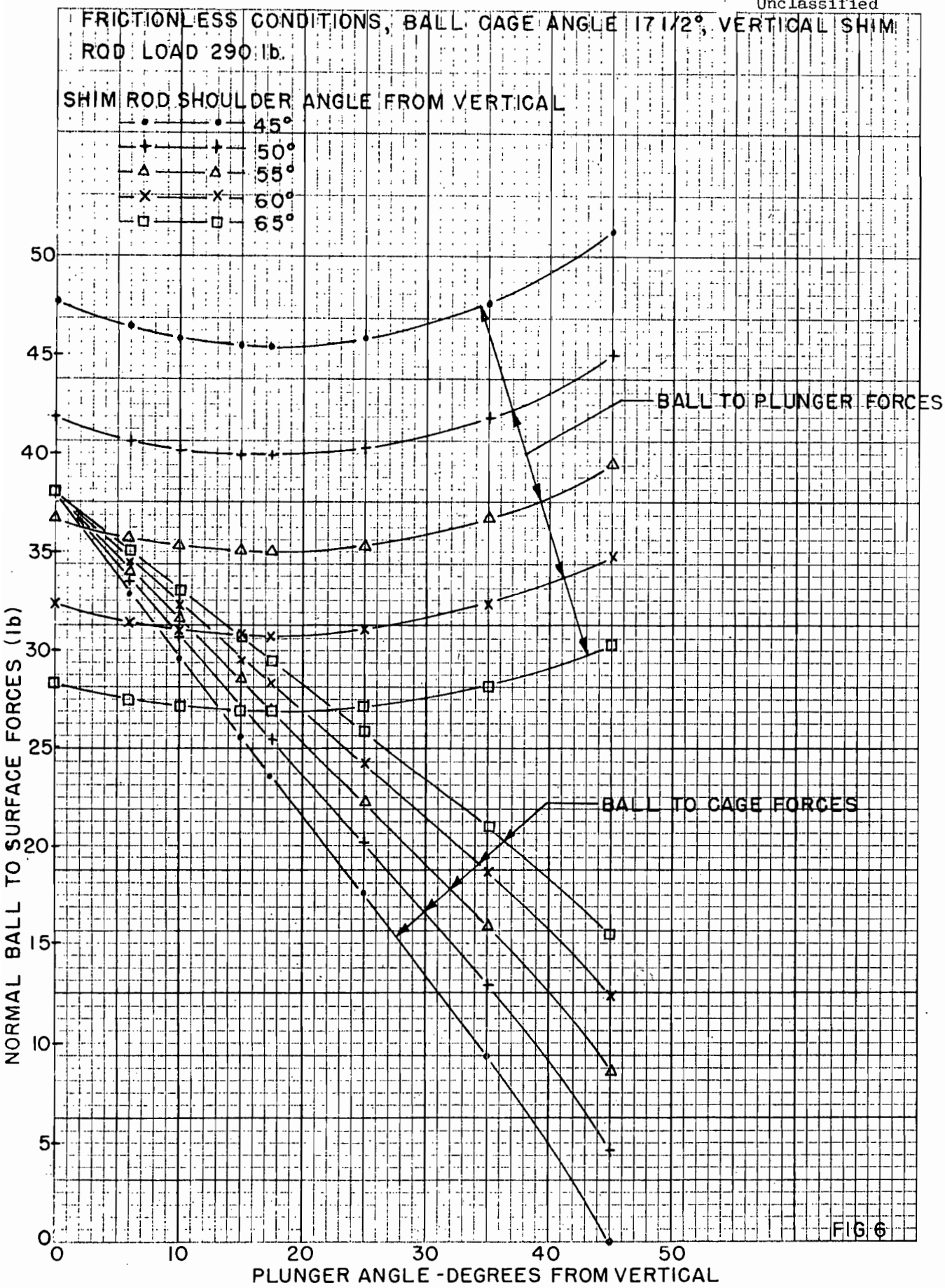

FIG 6

Boundary Conditions — Second System of Equations

It is not possible to select a specific new design configuration for a new ball latch solely on the basis of a minimized value for P'. The redesign is restricted to use of the present diameters for the drive tube and inside shim rod surfaces. One further analysis must be made to determine how much it is possible to increase the shim rod shoulder angle, γ, without bringing the contact points of the ball with both the head and shim rod too close to the edge of the support surface. It is necessary to develop and solve a second system of equations introducing the ball diameter as a variable to achieve optimization. Figure 7 indicates the depths of engagement, e and f, which must be properly selected for any given case. In the present ORR latch with $\beta = 17.5$ deg, $\gamma = 45$ deg, and $r = 0.15626$ in., the value of e is 0.0187 in. and f is 0.0348 in. Since the required reduction in P' is accompanied by an increase in H', it is considered desirable to hold f to a minimum value of about 0.035 in. in the redesigned system. It would also be desirable to increase e to at least 0.025 in. in the redesigned system. To determine the best combination of these values possible within the existing restrictions, e and f have been calculated for a series of values of r and γ. The angle β was held constant at 17.5 deg for the solutions reported. The calculations were carried out for four sets of seven cases according to the procedure outlined below.

For each set:

1) Calculate $R_{min} = 0.9460 - r \cos \gamma$.

2) Calculate $R_{max} = 1.1290 - r$.

3) Calculate $e = R + r \cos \gamma - 0.9460$ for a series of R values starting with $R = R_{min}$ and increasing R by increments of 0.015 in. until a final value of e is calculated for R_{max}.

4) Calculate $f = 0.9360 - r \sin \beta - R$ for the same values of R as used in calculating e.

ORNL-LR-Dwg. 65222
Unclassified

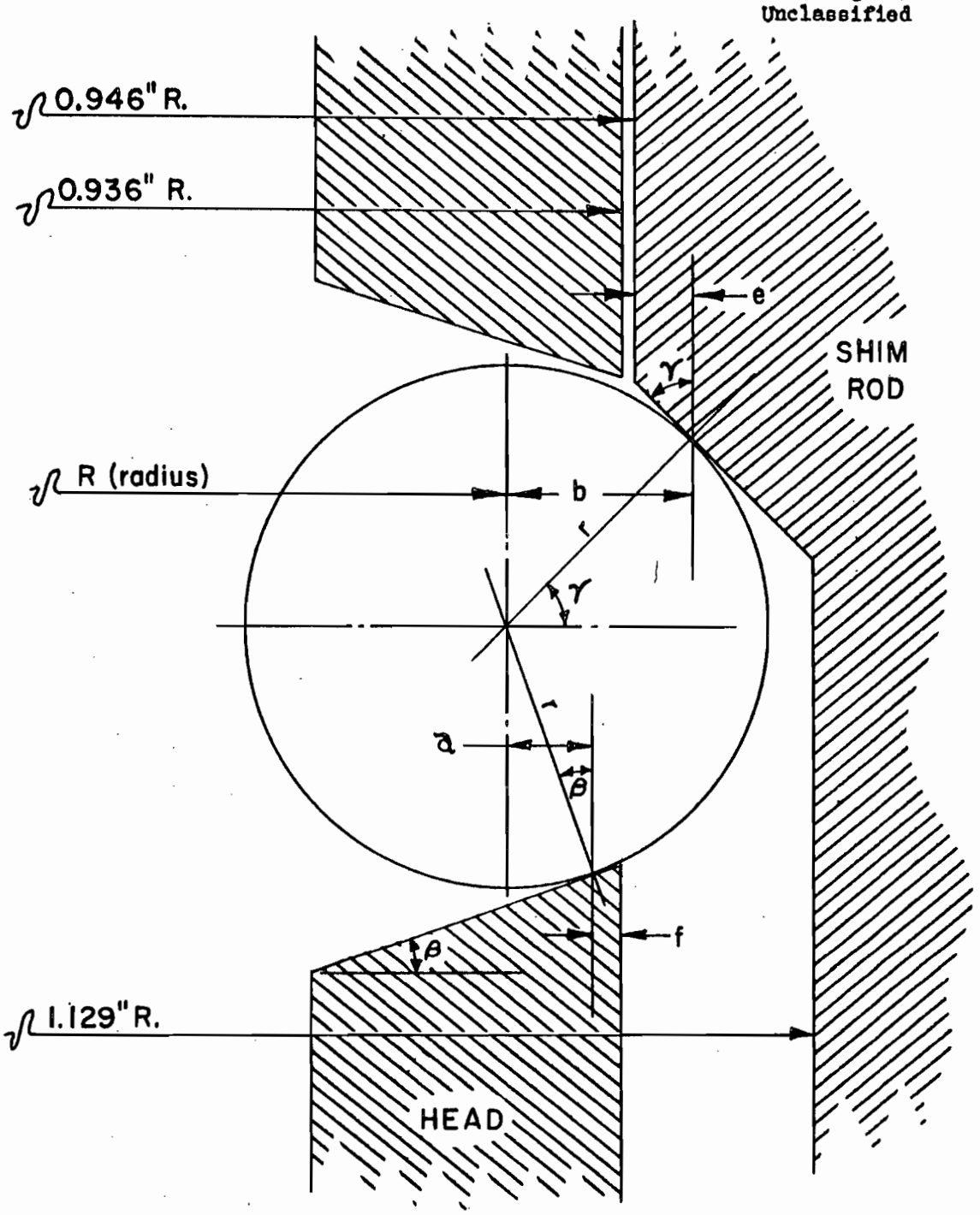

FIGURE 7

	Case 1	Case 2	Case 3	Case 4	Case 5	Case 6	Case 7
Set 1 γ	45°	50°	52.5°	55°	57.5°	60°	65°
r, in.	0.15625	0.15625	0.15625	0.15625	0.15625	0.15625	0.15625
Set 2 γ	45°	50°	52.5°	55°	57.5°	60°	65°
r, in.	0.1875	0.1875	0.1875	0.1875	0.1875	0.1875	0.1875
Set 3 γ	45°	50°	52.5°	55°	57.5°	60°	65°
r, in.	0.21875	0.21875	0.21875	0.21875	0.21875	0.21875	0.21875
Set 4 γ	45°	50°	52.5°	55°	57.5°	60°	65°
r, in.	0.2500	0.2500	0.2500	0.2500	0.2500	0.2500	0.2500

Figures 8 and 9 are plots of e and f as functions of R and γ for all seven cases of sets 1 and 4, respectively. It is evident that to hold engagement e to 0.025 in. and f to 0.035 in. and at the same time increase the shim rod shoulder angle γ as much as possible, the larger ball diameter of Fig. 9 must be adopted. Figure 9 indicates that with a 1/2-in.-dia ball the shim rod shoulder angle may be increased to about 54 deg. Existing geometry of ORR control rod drive tube components limits the ball diameter to a maximum of about 1/2 in. Thus the ball diameter and shim rod shoulder angle for the redesigned latch are fixed for the minimum values specified for e and f and for a ball cage hole angle β of 17 1/2 deg.

Summary and Conclusions

These analytical descriptions of the family of ball latch mechanisms which include the present ORR control rod ball latch assembly permit rapid machine calculation of the magnitude and directions of all forces acting on the latch assembly components for any desired variation in the angles of ball contact surfaces or in the friction factors at these surfaces. The results presented in Figs. 4 and 5 include the frictionless case and four specified sets of friction conditions. For any other given set of friction conditions, the

ORNL-LR-Dwg. 65223
Unclassified

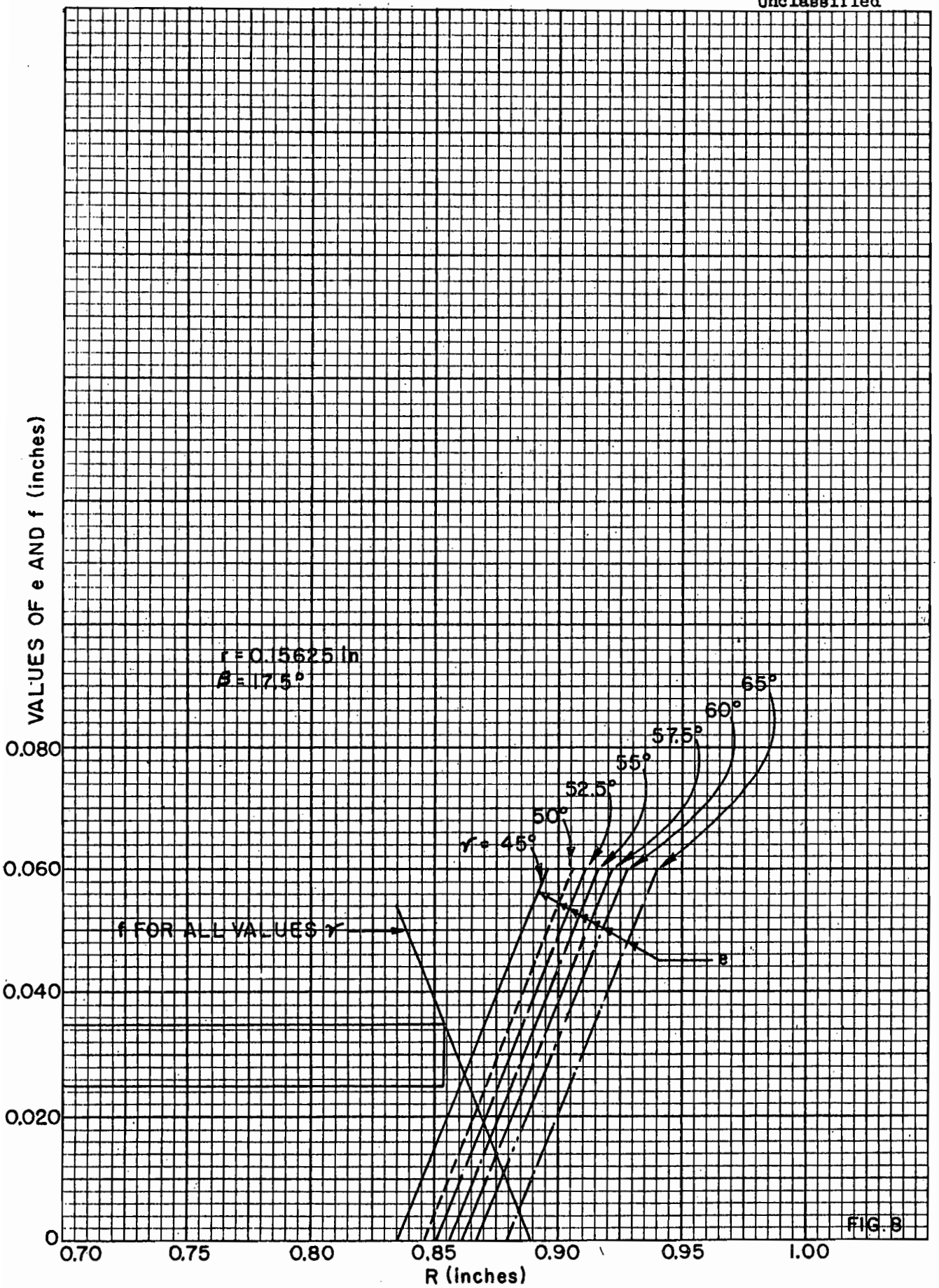

FIG. 8

ORNL-LR-Dwg. 65224
Unclassified

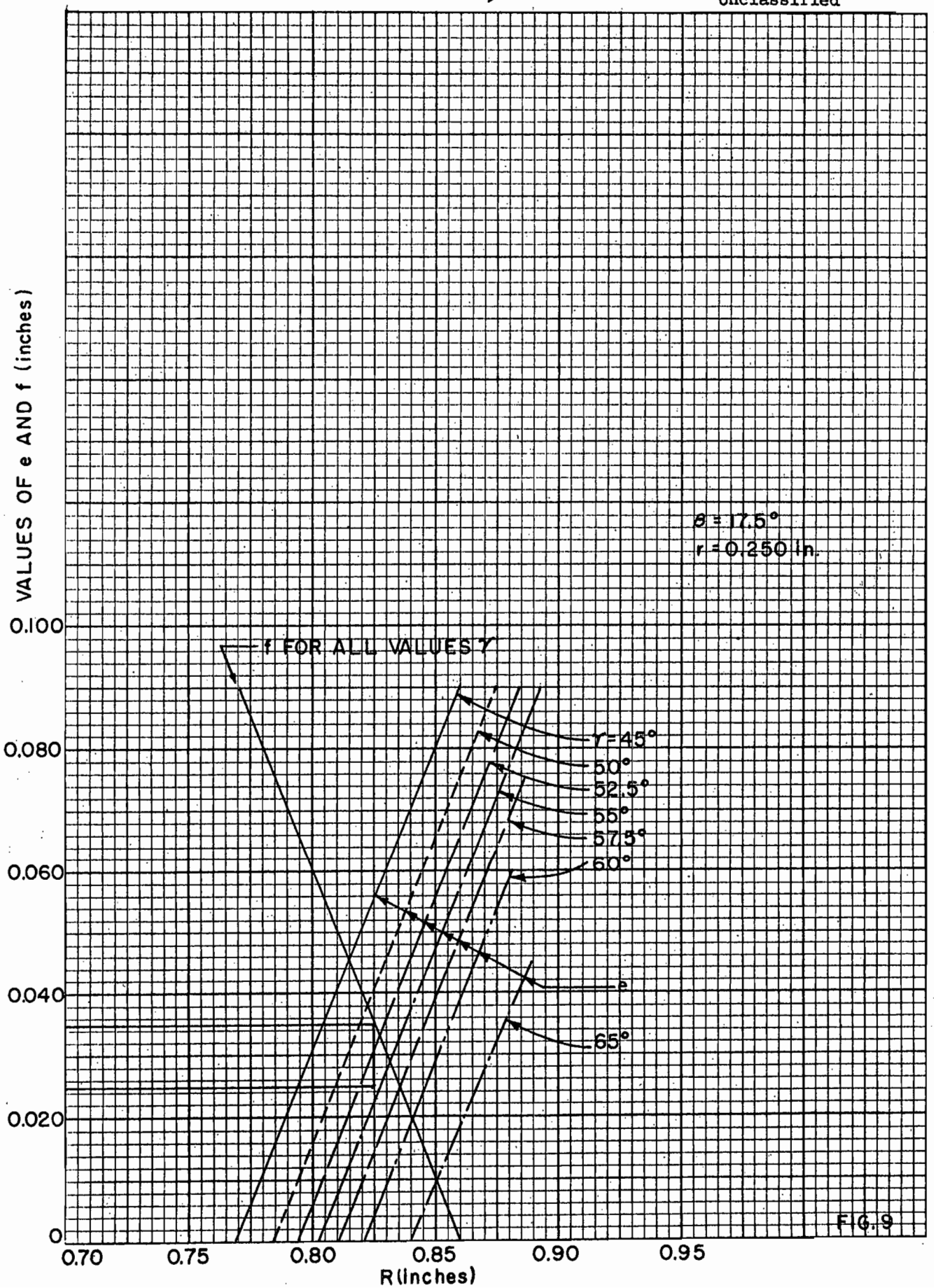

FIG. 9

surface angles which yield the minimum value of P' can be rapidly calculated. Experimental work is in progress to determine the coefficients of friction which actually prevail, and with these as fixed input data, this analytical model determines the specific values for all the fundamental design parameters for the ball latch mechanism. It should be borne in mind that the sets of friction values presented in Figs. 4 and 5 are assumed and not actual observed values. It is possible that measured μ values will exceed those represented in Figs. 4 and 5.

It is important that the use of the term "friction" be properly understood as applied to this problem. The term "equivalent friction" is more appropriate. Elastic and/or inelastic deformations of the contacting surfaces are partly responsible for the frictional shift in the direction of the force vectors. Since the behavior of the theoretical frictionless ball latch system can be calculated exactly, any known departure from these conditions required to achieve release of the actual mechanism can be calculated by selecting and introducing a set of values for μ_f, μ_P, and μ_H which yield solutions that match the particular observed behavior of the system. Once the apparent values of these three coefficients are measured and known for the selected design conditions, a specific ball latch design is determined by this analytical approach. This does not mean, however, that there should be no interest in the exact nature of these coefficients of "equivalent friction". With the understanding of the ball latch system afforded by these analytical studies, it is in the area of these equivalent coefficients of friction that further work on these mechanisms should be done. Through these terms variations in materials, material hardness, surface deformation, surface finishes, and lubrication conditions would be introduced into the analytical model for evaluation of any selected ball latch design. The analytical approach to determination of ball latch service life would also be made largely through these friction factor terms.

It is interesting to note that these studies were initiated in January 1961 and that in two memoranda of January 31, 1961, and February 6, 1961, references 1 and 2, the specific cause of the failure-to-scram problem was identified, and an increase in ball latch plunger angle from 6 to 30 deg for the first test plunger was recommended. Comparison of the early recommendation for a 30-deg plunger angle with the present results, shown in Fig. 5 for the 45-deg shim rod shoulder angle and friction coefficient of 0.2 at the shim rod plunger, shows that the angle calculated to minimize the binding force responsible for failure to scram is 31 deg. The early recommendation to proceed with test work on a 30-deg plunger angle was rejected on the grounds that any plunger angle greater than 6 deg would increase the fraction of the shim rod load transmitted to the push rod and magnet system. A quantitative statement of the capabilities and limitations of magnet systems has been requested on several occasions but has never been received. Under these circumstances it can only be observed that the desired increase in magnet holding force for a redesigned mechanism appears to be well within reason with regard to both magnet design and space allocation considerations. Review of parts of this memorandum with personnel of the Reactor Controls Department has led to arrangements for initiation of a work effort to produce some quantitative statement of magnet system capabilities and limitations in a form which will permit the redesign of the ORR control rod mechanism to be completed. The analytical and experimental data developed to date do not indicate that the basic design concept of a magnet-actuated ball latch selected by ORNL for the ORR control rod was unsound. Additional memoranda on other aspects of the design and testing of the ORR control rod mechanism are in preparation and will be issued in the near future.

References

1) "ORR Control Rod Drives – Failure to Scram", J. Foster and G. L. Rhoden to A. P. Fraas, January 31, 1961, Intra-Laboratory Memorandum.

2) "ORR Control Rod Drives", J. Foster and G. L. Rhoden to A. P. Fraas, February 6, 1961, Intra-Laboratory Memorandum.

Distribution

1. DTIE, AEC
2. Central Research Library
3. Document Reference Section
4. M. J. Skinner