28

OAK RIDGE NATIONAL LABORATORY

operated by

UNION CARBIDE CORPORATION

for the

U. S. ATOMIC ENERGY COMMISSION

ORNL - TM - 542

SPECIFICATIONS AND DRAWINGS FOR THE CONTROL RODS FOR THE EXPERIMENTAL GAS-COOLED REACTOR

NOTICE

This document contains information of a preliminary nature and was prepared primarily for internal use at the Oak Ridge National Laboratory. It is subject to revision or correction and therefore does not represent a final report. The information is not to be abstracted, reprinted or otherwise given public dissemination without the approval of the ORNL patent branch, Legal and Information Control Department.

LEGAL NOTICE

This report was prepared as an account of Government sponsored work. Neither the United States, nor the Commission, nor any person acting on behalf of the Commission:

A. Makes any warranty or representation, expressed or implied, with respect to the accuracy, completeness, or usefulness of the information contained in this report, or that the use of any information, apparatus, method, or process disclosed in this report may not infringe privately owned rights; or

B. Assumes any liabilities with respect to the use of, or for damages resulting from the use of any information, apparatus, method, or process disclosed in this report.

As used in the above, "person acting on behalf of the Commission" includes any employee or contractor of the Commission, or employee of such contractor, to the extent that such employee or contractor of the Commission, or employee of such contractor prepares, disseminates, or provides access to, any information pursuant to his employment or contract with the Commission, or his employment with such contractor.

ORNL-TM-547

Contract No. W-7405-eng-26

METALS AND CERAMICS DIVISION

SPECIFICATIONS AND DRAWINGS FOR THE CONTROL RODS FOR THE EXPERIMENTAL GAS-COOLED REACTOR

Original Issue Date: March 6, 1961
First Revision Date: August 1, 1961
Second Revision: ORNL-CF-62-10-64
(Oct. 3, 1962)
(Changes denoted by "R" in Right Margin)

DATE ISSUED

MAY 29 1963

OAK RIDGE NATIONAL LABORATORY
Oak Ridge, Tennessee
operated by
UNION CARBIDE CORPORATION
for the
U. S. ATOMIC ENERGY COMMISSION

CONTENTS

page

INTRODUCTION ---------- 1

Description of the Reactor ---------- 1

Description of the Control Rods ---------- 2

MASTER SPECIFICATION FOR THE CONTROL RODS FOR THE EXPERIMENTAL GAS-COOLED REACTOR, Spec. No. EGCR-3 ---------- 3

SPECIFICATION FOR STAINLESS STEEL SPACER SEGMENTS FOR CONTROL RODS FOR THE EXPERIMENTAL GAS-COOLED REACTOR, Spec. No. EGCR-3-3 ---------- 15

SPECIFICATION FOR STAINLESS STEEL FILTER FOR CONTROL RODS FOR THE EXPERIMENTAL GAS-COOLED REACTOR, Spec. No. EGCR-3-4 ---------- 17

SPECIFICATION FOR STAINLESS STEEL SPIDER AND BOTTOM GUIDE FOR CONTROL RODS FOR THE EXPERIMENTAL GAS-COOLED REACTOR, Spec. No. EGCR-3-5 ---------- 19

SPECIFICATION FOR STAINLESS STEEL BOTTOM GUIDE ARMS FOR CONTROL RODS FOR THE EXPERIMENTAL GAS-COOLED REACTOR, Spec. No. EGCR-3-6 ---------- 21

SPECIFICATION FOR INCONEL-X SPRING FOR CONTROL RODS FOR THE EXPERIMENTAL GAS-COOLED REACTOR, Spec. No. EGCR-3-7 ---------- 23

SPECIFICATION FOR STAINLESS STEEL TUBING FOR CONTROL RODS FOR THE EXPERIMENTAL GAS-COOLED REACTOR, Spec. No. EGCR-3-8 ---------- 25

SPECIFICATION FOR BORON CARBIDE BUSHINGS FOR CONTROL RODS FOR THE EXPERIMENTAL GAS-COOLED REACTOR, Spec. No. EGCR-3-9 ---------- 29

SPECIFICATION FOR STAINLESS STEEL CENTRAL ROD FOR CONTROL RODS FOR THE EXPERIMENTAL GAS-COOLED REACTOR, Spec. No. EGCR-3-10 -------- 31

CONTENTS (continued)

page

APPENDIX I, SPECIFICATION FOR THE CONTROL RODS FOR THE EXPERIMENTAL GAS-COOLED REACTOR ---------- 37

APPENDIX II,

A-RD-9982 "Compression Spring, Segmented Control Rod, EGCR" ---- 43

D-RD-10143B "Details, Segmented Control Rod, EGCR, Sheet I" --- 45

D-RD-10144B "Details, Segmented Control Rod, EGCR, Sheet II" -- 47

E-RD-10145D "Details and General Arrangement, Control Rod, EGCR" ---------- 49

APPENDIX III, BIBLIOGRAPHY ---------- 53

SPECIFICATIONS AND DRAWINGS FOR THE CONTROL RODS FOR THE EXPERIMENTAL GAS-COOLED REACTOR

J. H. Coobs
N. A. Brown*
R. M. Evans
G. M. Tolson**

INTRODUCTION

Description of the Reactor

The Experimental Gas-Cooled Reactor is a combined experimental and power demonstration reactor now under construction at Oak Ridge, Tennessee. R It is fueled with partially enriched uranium dioxide clad in stainless steel, moderated with graphite, and cooled with helium. The plant is designed to produce 84.3 Mw of thermal power with reactor coolant outlet temperature of 1050°F and 22 Mw of net electrical power.

The reactor portion of the plant consists of a pressure vessel which contains the graphite core, fuel assemblies, and control rods. The reactor thermal power of 84.3 Mw is extracted by a helium flow of 427,000 lb/hr at 315 psia. The coolant enters the reactor at 510°F and exits at 1050°F.

The core is a right circular cylinder with a vertical axis; it is constructed of monolithic columns of graphite. Vertical channels are provided through the graphite for the fuel assemblies, control rods, proposed experimental loops, and flux plotters.

A fuel assembly consists of a cluster of seven cylindrical stainless steel tubes (containing approximately 2.4% enriched UO_2 pellets) spaced and supported within a graphite sleeve. A stack of six assemblies plus one dummy each at the bottom and top fill a fuel channel.

The reactor is designed for fuel charging and discharging under load. These fuel-handling operations are accomplished by a charge machine located beneath the reactor and a service machine located above the reactor. The charge machine is used for normal loading and unloading of reactor fuel assemblies. The service machine is used for handling control rod assemblies, flux plotting devices, fuel assemblies, special fuel assemblies, and special plugs.

---

*Tennessee Valley Authority

**Author of Second Revision

Description of the Control Rods

The control rods are of articulated construction and are composed of four sections. The lower three sections consist of boron carbide bushings clad with stainless steel and the upper section is stainless steel. The four sections are connected by a stainless steel rod through the center. The operating temperature of the control rods will vary from approx 450°F to approx 1700°F. Each of the boron carbide-containing sections is vented to the coolant stream to prevent the buildup of pressure from the release of helium produced by the reaction

$$B^{10}\ (n,\alpha)\ Li^{7}$$

The stainless steel container is designed to prevent the escape of B_4C particles into the reactor. The container is vented using a stainless steel filter to cover the vent passages and prevent the passage of free B_4C particles. All of the surfaces of the stainless steel that are in contact with B_4C are copperplated to prevent reaction of the stainless steel with boron at elevated temperatures. The control rods are cooled by the helium stream used to cool the control rod drive mechanism. The flow is down from the drive through the shroud tube into the inside of the rod and out the bottom. The top and bottom closures in the rod are designed to minimize the loss of helium coolant through the joints. Some cooling of the outside of the rod may be accomplished by the upward movement of this helium around the rod. The outer surfaces of the B_4C-bearing sections are oxidized to increase the emissivity of these surfaces, since about half of the heat generated in the rod is transferred to the surrounding graphite by radiation.

The control rods will operate in a vertical position and must move freely in the channel and shroud tube. The clearance in passing through the shroud will be small and, therefore, no protuberances can be tolerated. The control rods must be capable of withstanding the stresses imposed, which may include a deceleration of 25 g during shock loading. In addition, the articulated construction must provide sufficient flexibility to allow movement should the control rod channel become distorted due to shrinkage of the graphite core.

EGCR CONTROL ROD SPECIFICATION
METALLURGY DIVISION
OAK RIDGE NATIONAL LABORATORY

Spec. No. EGCR-3
Date: March 6, 1961
Page 1 of 11

Union Carbide Nuclear Company
A Division of Union Carbide Corporation
Oak Ridge, Tennessee

Subject: MASTER SPECIFICATION FOR THE CONTROL RODS FOR THE EXPERIMENTAL GAS-COOLED REACTOR

I. SCOPE

This specification defines the control rods for the EGCR, which are of articulated construction with a central support rod as the supporting and connecting member. Each control rod consists of one section of stainless steel and three sections containing B_4C bushings clad with inner and outer stainless steel tubes.

II. REFERENCES

A. Drawings:

1. A-RD-9982 "Compression Spring, Segmented Control Rod, EGCR"

2. D-RD-10143B "Details, Segmented Control Rod, EGCR, Sheet I" R

3. D-RD-10144B "Details, Segmented Control Rod, EGCR, Sheet II" R

4. E-RD-10145 D "Details and General Arrangement, Segmented Control Rod, EGCR" R

B. Specifications: R

1. EGCR-3-1 Deleted

2. EGCR-3-2 Deleted

3. EGCR-3-3 "Specification for Stainless Steel Spacer Segments for the Experimental Gas-Cooled Reactor"

4. EGCR-3-4 "Specification for Stainless Steel Filter for Control Rods for the Experimental Gas-Cooled Reactor"

5. EGCR-3-5 "Specification for Stainless Steel Spider and Bottom Guide for Control Rods for the Experimental Gas-Cooled Reactor"

6. EGCR-3-6 "Specification for Stainless Steel Bottom Guide Arms for Control Rods for the Experimental Gas-Cooled Reactor"

7. EGCR-3-7 "Specification for Inconel-X Spring for Control Rods for the Experimental Gas-Cooled Reactor"

8. EGCR-3-8 "Specification for Stainless Steel Tubing for Control Rods for the Experimental Gas-Cooled Reactor"

9. EGCR-3-9 "Specification for Boron Carbide Bushings for Control Rods for the Experimental Gas-Cooled Reactor"

Subject: MASTER SPECIFICATION FOR THE CONTROL RODS FOR THE EXPERIMENTAL GAS-COOLED REACTOR

REFERENCES (continued)

10. EGCR-3-10 "Specification for Stainless Steel Central Rod for Control Rods for the Experimental Gas-Cooled Reactor"

11. MET-RI-1 "Tentative Specification for Liquid-Penetrant Inspection of Items for High-Temperature Nuclear Service"

12. MET-RI-2 "Tentative Specification for Cleanliness of Items for Use in High-Temperature Nuclear Service"

13. MET-RS-1 "Interpretation of Weld Symbols Used on Company's Drawings"

14. ASME Boiler and Pressure Vessel Code, Section VIII, "Unfired Pressure Vessels"

15. ASTM Designation: B 254 – 53 "Recommended Practice for Preparation of and Electroplating on Stainless Steel"

16. ASTM Designation: A 219 – 58 "Standard Methods of Test for Local Thickness of Electrodeposited Coatings"

17. ASTM Designation: B 304 – 56 T "Tentative Specification for Nickel and Nickel-Base Alloy Bare Welding Filler Metals"

18. ASTM Designation: E 3 – 58 T "Tentative Methods of Preparation of Metallographic Specimens"

III. MANUFACTURING REQUIREMENTS

The control rods shall be manufactured in strict accordance with Dwg. E-RD-10145D, "Details and General Arrangement, Segmented Control Rod, EGCR" and in accordance with this specification.

Subject: MASTER SPECIFICATION FOR THE CONTROL RODS FOR THE EXPERIMENTAL GAS-COOLED REACTOR

IV. MATERIALS

Each control rod shall consist of the following components:

Item No.	Component	Material	Drawing No.	Specification No.	Quantity	
1	Deleted					R
2	Upper Spring Support	304 SS	D-10143-1	EGCR-3-8	1	R
3	Lower Spring Support	304 SS	D-10143-4	EGCR-3-8	1	R
4	Top Closure	304 SS	D-10143-7	EGCR-3-3	3	
5	Bottom Guide	347H SS	D-10144-10	EGCR-3-5	1	
6	Spring	Inconel X	A-RD-9982	EGCR-3-7	1	
7	Lower Tube	304 SS	D-10143-3	EGCR-3-8	1	
8	Upper Tube	304 SS	E-RD-10145	EGCR-3-8	1	
9	Outer Tube	304 SS	D-10144-3	EGCR-3-8	3	
10	Bushing	B_4C	D-10144-4	EGCR-3-9	57	
11	Inner Tube, Type I	304 SS	D-10144-5	EGCR-3-8	2	
12	Inner Tube, Type II	304 SS	D-10144-6	EGCR-3-8	1	
13	Bottom Closure, Type II	304 SS	D-10144-8	EGCR-3-3	2	
14	Bottom Closure, Type III	304 SS	D-10144-9	EGCR-3-3	1	
15	Central Rod	347H SS	E-RD-10145	EGCR-3-10	1	
16	Spacer Segment, Type II	304 SS	D-10144-7	EGCR-3-3	10	R
17	Spacer Segment, Type I	304 SS	D-10144-1	EGCR-3-3	2	
18	Spider	347H SS	D-10143-2	EGCR-3-5	1	
19	Bottom Guide Arm	347H SS	D-10143-5	EGCR-3-6	4	
20	Filter	304 SS	D-10143-6	EGCR-3-4	3	
21	Bottom Closure, Type I	304 SS	D-10144-2	EGCR-3-3	1	

V. WELDING REQUIREMENTS

All welding shall conform to the requirements of MET-RS-1 for the particular type weld.

Subject: MASTER SPECIFICATION FOR THE CONTROL RODS FOR THE EXPERIMENTAL GAS-COOLED REACTOR

VI. WELD INSPECTION REQUIREMENTS

A. All welds shall be inspected in accordance with the requirements of MET-RS-1 for the particular type weld.

B. Welds requiring liquid-penetrant inspection shall be inspected in accordance with MET-RI-1.

C. Welds requiring radiography shall be radiographed in accordance with ASME Boiler and Pressure Vessel Code, Section VIII, Unfired Pressure Vessels, Paragraph UW-51.

VII. COPPERPLATING REQUIREMENTS

A. All surfaces to be in contact with B_4C during operation shall be protected by electrodeposited copperplating which shall be diffusion bonded to the stainless steel. The filter shall receive the equivalent of 0.002 to 0.0025 in. plated on a solid surface. The copperplating thickness shall be 0.0085 in. minimum for the outer tube and 0.0085 to 0.012 in. for the inner tube. R

B. The entire plating operation including the preparation of the stainless steel surfaces to be coated shall be performed in accordance with ASTM Designation: B 254 – 53.

C. For each plating operation, the Seller shall include a control sample for testing purposes. The sample shall be tubing of identical size and composition to that specified for the inner and outer tube, respectively, and 4 in. in length. The sample shall be processed with and shall receive the same surface preparation and plating procedure as the production parts.

D. The surfaces to be copperplated are shown in Figs. 1, 2a, and 2b.

E. Diffusion Bond – Upon satisfactory proof of adhesion of the copperplate to stainless steel, as required in Section XI, Part B-4a, the copperplate shall be diffusion bonded to the stainless steel by heating in a helium atmosphere to a temperature of 1750°F for a period of at least 2 hr. Precautionary measures shall be taken to ensure against distortion of the subassembly.

For each diffusion-bonding operation, the Seller shall include a control sample for testing purposes as required in Section XI, Part B-4c of this specification. The sample shall be tubing of identical size and composition to that specified for the outer tubing. The sample shall be processed with and shall receive the same treatment as the production parts.

Subject: MASTER SPECIFICATION FOR THE CONTROL RODS FOR THE EXPERIMENTAL GAS-COOLED REACTOR

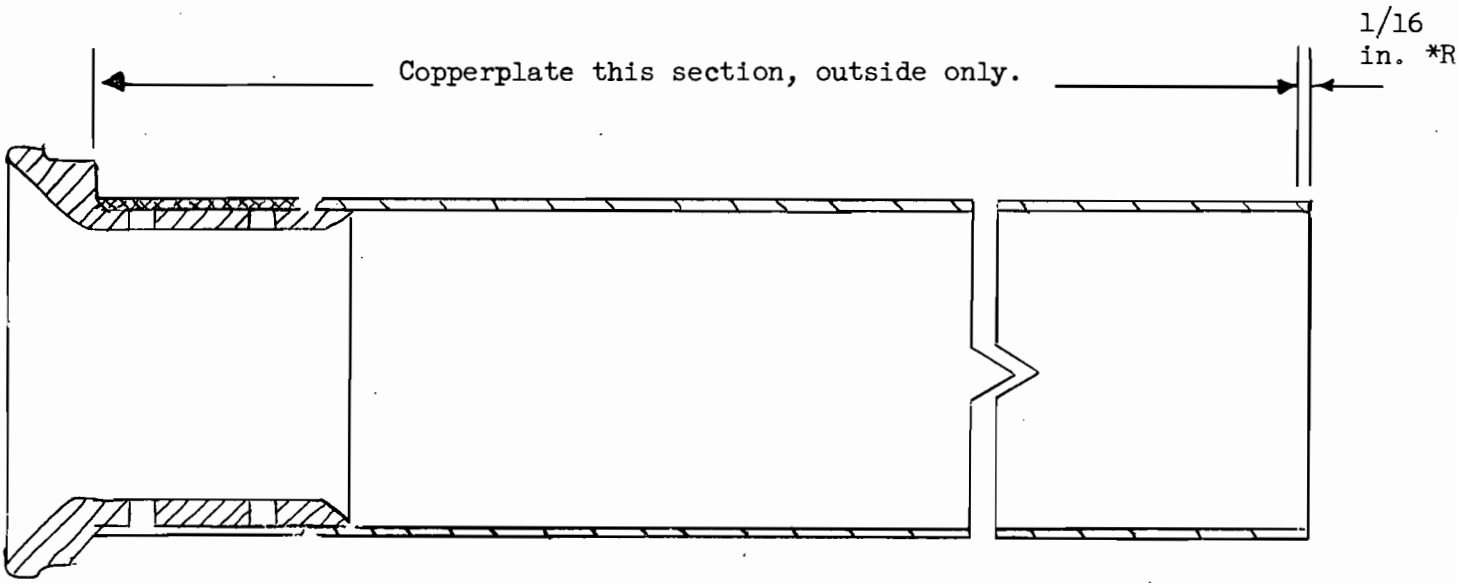

Fig. 1. Inner Tube-Filter and Top-Closure Subassembly.

*This dimension is 3/8 in. maximum on the two center segments and 1/16 in. maximum on the bottom segment. R

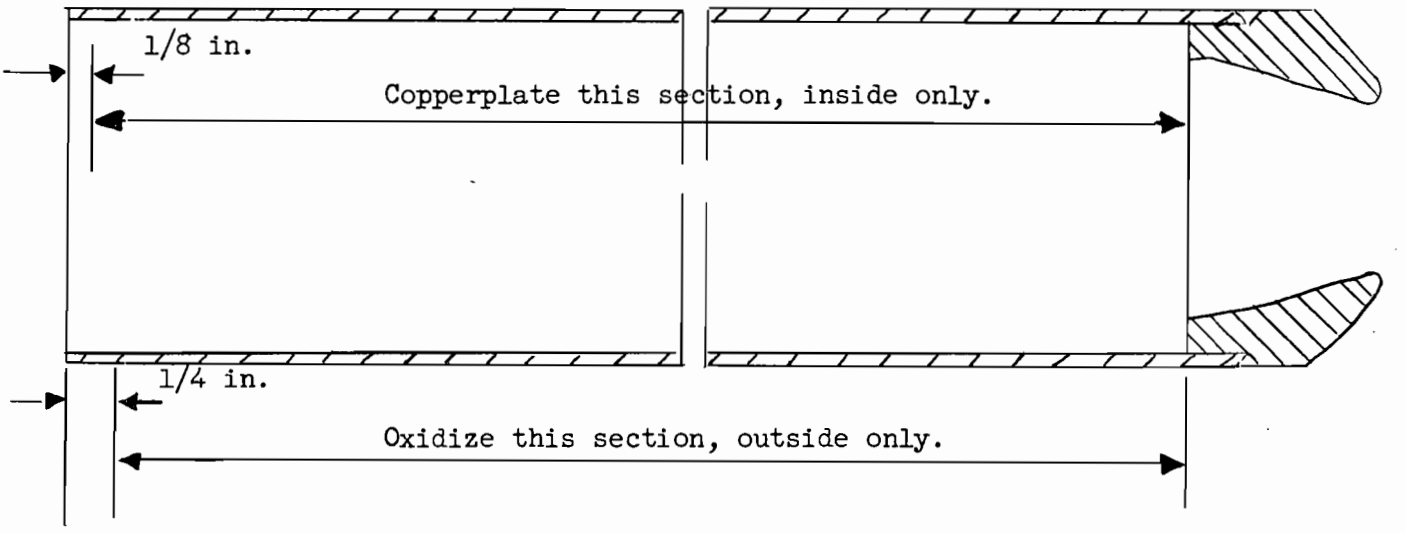

Fig. 2a. Outer Tube-Bottom Closure – Type II, Subassembly.

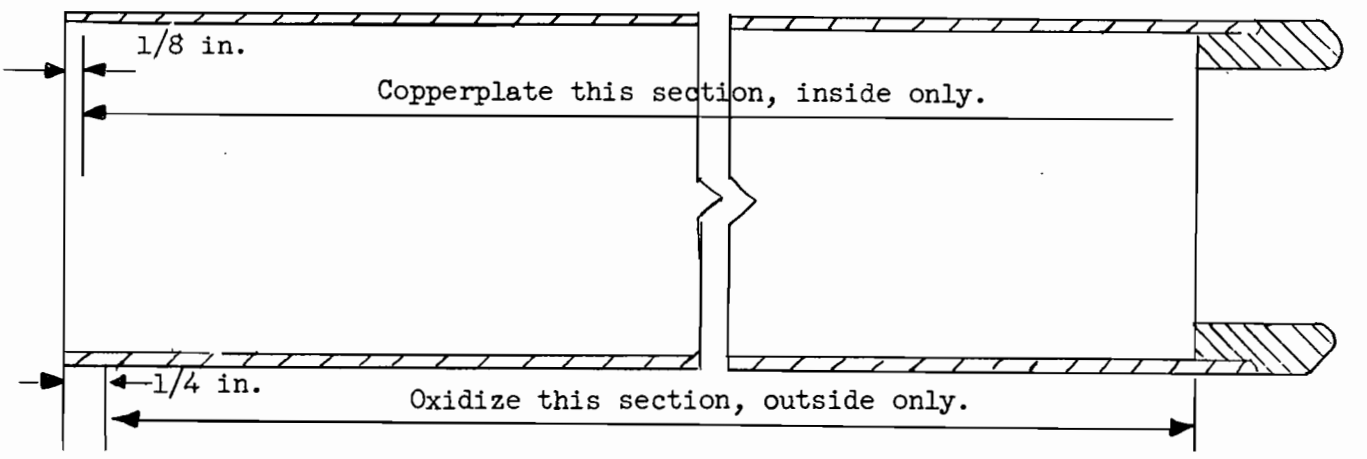

Fig. 2b. Outer Tube-Bottom Closure – Type III, Subassembly.

The copperplate shall be tapered on the inside of the outer tube for a distance of 1/8 in. from the edge of the plate. Taper will be from zero thickness to full copperplate thickness. R

Subject: MASTER SPECIFICATION FOR THE CONTROL RODS FOR THE EXPERIMENTAL GAS-COOLED REACTOR

VIII. SURFACE OXIDIZING REQUIREMENT R

A. The outer surface of the outer tubes of the B_4C-bearing sections of the control rod shall be oxidized as indicated on Figs. 2a and 2b to provide an adherent, dull, black oxide coating to increase the emissivity, The minimum thickness of the coating shall be 0.0005 in. and a maximum thickness of 0.0015 in. This treatment may be done at the same time as the diffusion-bond procedure in Section VII above if suitable procedures are demonstrated.

B. The process and procedure utilized by the Seller to provide the oxide coating on the required surfaces shall be subject to the Company's approval.

C. For each oxidizing operation, the Seller shall include a control sample for testing purposes. The sample shall be tubing of identical size and composition to that specified for the outer tubing. The sample shall be processed with and shall receive the same treatment as the production parts.

IX. COATING REQUIREMENT

A. The conical section of each top closure shall be overlaid with Hastelloy filler wire conforming to the requirements of Designation ERN 7 C of ASTM Designation: B 304 – 56 T to prevent the self-welding of the top and bottom closure units. The Hastelloy shall be applied by the inert-gas-shielded tungsten-arc method and shall be machine finished to provide a conical surface finish of 32 rms or better. The minimum thickness of the Hastelloy shall be 1/16 in. In addition the surface of the deposited Hastelloy shall be oxidized as required in Section VIII above. R

B. The Seller shall demonstrate the method used to obtain the specified coating. A job sample representing the production techniques to be used shall be prepared and submitted to the Company for approval prior to production.

X. CLEANLINESS

The control rod shall be free of oil, grease, dirt, or other foreign matter as specified in MET-RI-2.

Subject: MASTER SPECIFICATION FOR THE CONTROL RODS FOR THE EXPERIMENTAL GAS-COOLED REACTOR

XI. TEST REQUIREMENTS

A. Visual examinations specified in this section shall be performed under a minimum of 100 footcandles of direct daylight-type fluorescent illumination.

B. The following inspections and tests shall be performed:

1. Welds — All welds shall be inspected to determine compliance with the requirements of MET-RS-1.

2. Surface Oxidation — A metallographic examination shall be performed in accordance with ASTM Designation: E 3 — 58 T by the Seller to determine the thickness of the oxide coating. The metallographic techniques utilized shall be such that the oxide coating is readily discernible under appropriate magnification. The oxide coating shall conform to the requirements of Section VIII of this specification.

3. Cleanliness — Each control rod shall be examined visually to determine compliance with requirements of Section X of this specification.

4. Copperplate — The control sample required in Section VII, Part C above, shall be cut transversely to provide duplicate samples 2 in. in length. Each of the samples shall then be identified by mechanical means with the plating batch or lot represented. Four longitudinally cut specimens of equal size are required from each sample. The specimen shall be labeled a, b, c, and d. Specimens a and c and specimens b and d, respectively, shall be from opposite locations in the sample. One complete sample shall be furnished by the Seller to the Company, and the other shall be used by the Seller in performing the required tests.

a. Adhesion — Specimens a and c shall be subjected to the following test by the Seller to provide evidence of adhesion obtained during the plating process. The test shall be performed before the coating is diffusion bonded to the stainless steel.

A fully annealed copper wire 1/8 in. in diameter and of sufficient length to perform the test shall be soft-soldered to the copper coating, approximately at the center and perpendicular to the surface to be tested. The joint shall be reasonably sound and uniform and clean in appearance prior to the test.

TEST REQUIREMENTS (continued)

A pulling force applied perpendicularly to the surface being tested shall be exerted until failure occurs. Any evidence of nonadhesion of the copperplating shall be cause for rejection of all parts represented by the tests.

b. Thickness of Plating — A metallographic examination shall be performed on specimens b and d by the Seller in accordance with "Microscopic Tests" of ASTM Designation: A 219 — 58. The b and d specimens from both the Seller's and the Company's sample shall be subjected to the diffusion-bond procedure specified in Section VII, Part E, of this specification prior to the metallographic examination. These specimens shall be processed with and shall be considered representative of the parts processed in any given batch for the diffusion-bond treatment. Specimens b and d of both samples may be divided additionally, if necessary, to meet this requirement.

The thickness of the copperplating shall conform to the requirements specified in Section VII, Part A, of this specification.

c. Diffusion Bond — A metallographic examination shall be performed by the Seller to determine the uniformity of the bond between the copperplate and the stainless steel. The metallographic techniques employed shall be such that oxide formations, voids, and lack of bond are readily discernible. This test may be performed during the metallographic examination specified in Part b above, provided all requirements of both examinations are achieved.

C. After assembly of the control rods, the components shall conform to the requirements specified in the referenced specifications for each component.

D. Each completed assembly shall be inspected for conformance with Dwg. E-RD-10145 and with this specification.

XII. ASSEMBLY PROCEDURE

The assembly procedure to be utilized in fabricating the control rods is left to the discretion of the Seller. A suggested assembly procedure is attached as Appendix I to this specification. However, the Company makes no representation that utilization of the suggested procedure by the Seller will result in acceptable control rods.

Subject: MASTER SPECIFICATION FOR THE CONTROL RODS FOR THE EXPERIMENTAL GAS-COOLED REACTOR

XIII. IDENTIFICATION

The following identification shall be applied to the control rods as specified:

A. Control Assembly — Each completed control rod assembly shall be given an identifying number. The number shall be mechanically etched 5 in. from the top of the upper tube using 1/2 in. Arabic numbers. The depth of the indentations shall not be less than 0.010 in. nor greater than 0.015 in.

B. Stainless Steel Segment — Each completed stainless steel segment shall be given an identifying number. The numbers shall be mechanically etched using 1/8 in. Arabic numbers on the outer circumference of the lower closure adjacent to the closure weld. The depth of the indentations shall not be less than 0.015 in. nor greater than 0.030 in.

C. Upper Closure, Filter, and Inner Tube — Each completed subassembly shall be given an identifying number. The number shall be mechanically etched using 1/8 in. Arabic numbers on the outer circumference of the upper closure adjacent to the closure weld. The depth of the indentation shall not be less than 0.015 in. nor greater than 0.030 in.

D. Lower Closure and Outer Tube (B_4C-Containing Segments) — Each completed subassembly shall be given an identifying number. The number shall be mechanically etched using 1/8 in. Arabic numbers on the outer circumference of the lower closure adjacent to the closure weld. The depth of the indentation shall not be less than 0.015 in. nor greater than 0.030 in.

E. Spider and Central Rod — Each completed subassembly shall be given an identifying number. The number shall be electrolytically etched on the outer circumference of the spider using 1/2 in. Arabic numbers.

XIV. RECORDS

The Seller shall be responsible for maintaining a complete record of all materials and process treatments which are required in the fabrication of the completed control rod assemblies. The information to be included shall be such as the following: heat numbers, batch or blend numbers, process numbers, weight and density of the boron carbide, inspection results, test results, dimensional measurement, process treatments, etc. A complete report of all such data on each

Subject: MASTER SPECIFICATION FOR THE CONTROL RODS FOR THE EXPERIMENTAL GAS-COOLED REACTOR

RECORDS (continued)

control rod assembly shall be furnished in five copies to the Company prior to shipment of the completed assemblies. Additionally, the Seller shall submit to the Company five copies of certified chemical analyses, physical properties data, and such other test reports as are required in the individual component specifications immediately upon receipt of these reports from his vendor or upon completion of fabrication in his shop.

The maintenance and submission of these records along with a certificate of compliance that the control rod conforms to the requirements of this specification shall be a condition of acceptance of the control rods.

EGCR CONTROL ROD SPECIFICATION
METALLURGY DIVISION
OAK RIDGE NATIONAL LABORATORY

Spec. No. EGCR-3-3
Date: March 6, 1961
Page 1 of 2

Union Carbide Nuclear Company
A Division of Union Carbide Corporation
Oak Ridge, Tennessee

Subject: SPECIFICATION FOR STAINLESS STEEL SPACER SEGMENTS FOR CONTROL RODS FOR THE EXPERIMENTAL GAS-COOLED REACTOR R

I. SCOPE

This specification applies to the spacer segments for the control rods for the Experimental Gas-Cooled Reactor. R

II. REFERENCES

A. Drawings:

1. D-RD-10143B "Details, Segmented Control Rod, EGCR, Sheet I" R

2. D-RD-10144B "Details, Segmented Control Rod, EGCR, Sheet II" R

B. Specifications:

1. MET-RI-1 "Tentative Specification for Liquid-Penetrant Inspection of Items for High-Temperature Nuclear Service," Revision No. 4

2. MET-RI-2 "Tentative Specification for Cleanliness of Items for Use in High-Temperature Nuclear Service"

3. ASME Boiler and Pressure Vessel Code, Section II, Material Specifications, 1959 Edition

4. ASTM Designation: E 71 – 52 "Industrial Radiographic Standards for Steel Castings"

5. ASTM Designation: E 142 – 59 T "Tentative Method for Controlling Quality of Radiographic Testing"

III. MANUFACTURING REQUIREMENTS

The spacer segments and top and bottom closures shall be manufactured in accordance with Dwgs. D-RD-10143 and/or D-RD-10144, as applicable, and with this specification. The fabrication procedure for each of the pieces shall be determined by the fabricator, subject to the approval of the Company. Stainless steel, Grade TP 304, or equivalent designation, conforming to the requirements of the applicable ASME specification shall be used for the material selected.

Should the fabricator elect to cast these pieces, the material shall conform to the requirements of Grade CF 8 of ASME Designation: SA 351, except that Section 8, Hydrostatic Tests, is waived. Section 14, Fluid-Penetrant Test, and Section 15, Radiographic Examination shall be required.

Subject: SPECIFICATION FOR STAINLESS STEEL SPACER SEGMENTS FOR CONTROL RODS FOR THE EXPERIMENTAL GAS-COOLED REACTOR R

IV. DIMENSIONAL REQUIREMENTS

The spacer segments and top and bottom closures shall conform to the dimensions and tolerances specified on Dwgs. D-RD-10143B and/or D RD-10144B, as applicable. R

V. SURFACE FINISH AND CONDITION

All surfaces of the spacer segments and top and bottom closures shall conform to the finishes specified on Dwgs. D-RD-10143 and/or D-RD-10144, as applicable. The surfaces shall be free of pits, nicks, gouges, etc., which are greater than 10% of the section thickness. Additionally, the pieces shall be free of cracks, seams, laps, and other crack-like defects, intergranular attack, scale, oxide film, dirt, oil, grease, or other foreign material.

VI. CLEANLINESS

These pieces shall be cleaned in accordance with Section 3.4.2.1.2. (Wiping) of MET-RI-2.

VII. TEST REQUIREMENTS

A. Visual – One hundred percent visual inspection shall be performed under direct daylight-type fluorescent lighting of at least 100 foot-candles to ensure conformance with the requirements of Sections V and VI of this specification.

B. Dimensional – One hundred percent dimensional inspection shall be performed to ensure conformance with the requirements of Section IV of this specification.

C. Penetrant – One hundred percent fluid-penetrant test shall be performed in accordance with the requirements of MET-RI-1 to ensure conformance with requirements of Section V above.

D. Radiographic (For castings only) – One hundred percent radiographic examination shall be performed in accordance with the requirements of ASTM Designation: E 71 – 52 utilizing Class I radiographic standards. The quality of the radiography shall conform to the requirements of ASTM Designation: E 142 – 59 T.

VIII. TEST REPORTS

A mill certification of the chemical analysis and physical properties and a certified statement of compliance with visual, dimensional, penetrant, and (where required) radiographic requirements shall be furnished in five copies to the Company by the Seller at time of shipment.

EGCR CONTROL ROD SPECIFICATION
METALLURGY DIVISION
OAK RIDGE NATIONAL LABORATORY

Spec. No. EGCR-3-4
Date: March 6, 1961
Page 1 of 2

Union Carbide Nuclear Company
A Division of Union Carbide Corporation
Oak Ridge, Tennessee

Subject: SPECIFICATION FOR STAINLESS STEEL FILTER FOR CONTROL RODS FOR THE EXPERIMENTAL GAS-COOLED REACTOR

I. SCOPE

This specification applies to seamless filter tubing of type 304 or 347 stainless steel for the control rods for the Experimental Gas-Cooled Reactor. R

II. REFERENCES

A. Drawing:

D-RD-10143B "Details, Segmented Control Rod, EGCR, Sheet I" R

B. Specification:

MET-RI-2 "Tentative Specification for Cleanliness of Items for Use in High-Temperature Nuclear Service"

III. MANUFACTURING REQUIREMENTS

A. The filter tubing shall be Bendix Filter Division "Porogard" or approved equal. R

B. The filter tubing shall consist of fine, flattened, type 304 stainless steel wire wound to produce a cylinder. The individual wires shall cross at an angle of 90 deg to provide equal strength in all directions, and shall be bonded by sintering in a controlled atmosphere such as dry hydrogen.

C. The tubing shall have a filtration rating of 2 μ, nominal, and 12 μ, maximum.

IV. DIMENSIONAL REQUIREMENTS

The filter tubing shall have an internal diameter of 2.407 in. ± 0.005 in. and a wall thickness of 0.025 to 0.040 in. R

V. CLEANLINESS

The filter tubing shall be cleaned in accordance with Section 3.4.2.1.1. (Vapor Degreasing) of MET-RI-2.

Subject: SPECIFICATION FOR STAINLESS STEEL FILTER FOR CONTROL RODS FOR THE EXPERIMENTAL GAS-COOLED REACTOR

VI. TEST REQUIREMENTS

A. Filtration Rating – A filtration test shall be performed to ensure compliance with the requirement of Section III, Part C of this specification. The testing method utilized by the Seller shall be subject to the Company's approval.

B. Dimensional – The filter tubing shall be dimensionally inspected to ensure compliance with the requirements of Section IV of this specification.

C. Visual – One hundred percent visual inspection shall be performed under direct daylight-type fluorescent lighting of at least 100 foot-candles to ensure conformance with Section V of this specification.

VII. TEST REPORTS

A mill certification of the chemical analysis and a certified statement of compliance with filtration, dimensional, and visual requirements shall be furnished in five copies to the Company by the Seller at time of shipment.

EGCR CONTROL ROD SPECIFICATION
METALLURGY DIVISION
OAK RIDGE NATIONAL LABORATORY

Spec. No. EGCR-3-5
Date: March 6, 1961
Page 1 of 2

Union Carbide Nuclear Company
A Division of Union Carbide Corporation
Oak Ridge, Tennessee

Subject: SPECIFICATION FOR STAINLESS STEEL SPIDER AND BOTTOM GUIDE FOR CONTROL RODS FOR THE EXPERIMENTAL GAS-COOLED REACTOR

I. SCOPE

This specification applies to the spider and bottom guide for the control rods for the Experimental Gas-Cooled Reactor. These pieces shall be fabricated of TP 347 H stainless steel.

II. REFERENCES

A. Drawings:

1. D-RD-10143B "Details, Segmented Control Rod, EGCR, Sheet I" R

2. D-RD-10144B "Details, Segmented Control Rod, EGCR, Sheet II" R

B. Specifications:

1. MET-RM-A 276 – TP 347 H-MOD. 1 "Tentative Specification for Austenitic Steel Bars for High-Temperature Nuclear Service," Revision No. 2

2. MET-RI-1 "Tentative Specification for Liquid-Penetrant Inspection of Items for High-Temperature Nuclear Service," Revision No. 4

3. MET-RI-2 "Tentative Specification for Cleanliness of Items for use in High-Temperature Nuclear Service"

III. MANUFACTURING REQUIREMENTS

The spider and bottom guide shall be manufactured in accordance with Dwgs. D-RD-10143 and D-RD-10144 and with this specification. The pieces shall be machined from TP 347 H stainless steel bar stock conforming to the requirements of MET-RM-A 276 – TP 347 H-MOD. 1, including the additional requirements A1., Fluid-Penetrant Inspection, and A2., Ultrasonic Test, but excluding additional requirement A3., Corrosion Test.

IV. DIMENSIONAL REQUIREMENTS

The spider and bottom guide shall conform to the dimensions and tolerances specified on Dwgs. D-RD-10143 and D-RD-10144.

Subject: SPECIFICATION FOR STAINLESS STEEL SPIDER AND BOTTOM GUIDE FOR CONTROL RODS FOR THE EXPERIMENTAL GAS-COOLED REACTOR

V. SURFACE FINISH AND CONDITIONS

All surfaces of the spider and bottom guide shall conform to the finishes specified on Dwgs. D-RD-10143B and D-RD-10144B. The surfaces shall be free of pits, nicks, gouges, etc., which exceed 10% of the section thickness. Additionally, the pieces shall be free of cracks, seams, laps and other crack-like defects, intergranular attack, scale, oxide film, dirt, oil, grease, or other foreign material. R

VI. CLEANLINESS

These pieces shall be cleaned in accordance with 3.4.2.1.3 (Solvent Immersion) of MET-RI-2.

VII. TEST REQUIREMENTS

A. Visual – One hundred percent visual inspection shall be performed under direct daylight-type fluorescent lighting of at least 100 foot-candles to ensure conformance with the requirements of Sections V and VI of this specification.

B. Dimensional – One hundred percent dimensional inspection shall be performed to ensure conformance with the requirements of Section IV of this specification.

C. Penetrant – One hundred percent liquid dye-penetrant inspection shall be performed in accordance with the requirements of MET-RI-1 to ensure conformance with Section V of this specification.

VIII. TEST REPORTS

The statement and reports required in Section 13, MET-RM-A 276 – TP 347 H-MOD. 1, and a certified statement of compliance with dimensional, visual, and penetrant requirements shall be furnished in five copies to the Company by the Seller at time of shipment.

EGCR CONTROL ROD SPECIFICATION
METALLURGY DIVISION
OAK RIDGE NATIONAL LABORATORY

Spec. No. EGCR-3-6
Date: March 6, 1961
Page 1 of 2

Union Carbide Nuclear Company
A Division of Union Carbide Corporation
Oak Ridge, Tennessee

Subject: SPECIFICATION FOR STAINLESS STEEL BOTTOM GUIDE ARMS FOR CONTROL RODS FOR THE EXPERIMENTAL GAS-COOLED REACTOR

I. SCOPE

This specification applies to TP 347 H stainless steel bottom guide arms for the control rods for the Experimental Gas-Cooled Reactor.

II. REFERENCES

A. Drawing:

D-RD-10143B "Details, Segmented Control Rod, EGCR, Sheet I" R

B. Specifications:

1. MET-RM-A 240 – TP 347 H-MOD. 1 "Tentative Specification for Austenitic Steel Plate, Sheet, and Strip for High-Temperature Nuclear Service," Revision No. 2

2. MET-RI-1 "Tentative Specification for Liquid-Penetrant Inspection of Items for High-Temperature Nuclear Service," Revision No. 4

3. MET-RI-2 "Tentative Specification for Cleanliness of Items for Use in High-Temperature Nuclear Service"

III. MANUFACTURING REQUIREMENTS

The bottom guide arms shall be manufactured in accordance with Dwg. D-RD-10143 and with this specification. The bottom guide arms shall be fabricated from TP 347 H stainless steel sheet or strip conforming to the requirements of this specification and MET-RM-A 240 – TP 347 H-MOD. 1, with the exception of Sections 12, "Intergranular Corrosion Test," and A1., "Packing for Delivery," which are waived.

IV. DIMENSIONAL REQUIREMENTS

The bottom guide arms shall conform to the dimensions and tolerances specified on Dwg. D-RD-10143B. R

V. SURFACE FINISH AND CONDITION

All surfaces of the bottom guide arms shall conform to the finishes specified on Dwg. D-RD-10143B. The surfaces shall be free of pits, nicks, gouges, etc., which exceed 10% of the section thickness. R
Additionally, the pieces shall be free of cracks, seams, laps and other crack-like defects, intergranular attack, scale, oxide film, dirt, oil, grease, or other foreign material.

Subject: SPECIFICATION FOR STAINLESS STEEL BOTTOM GUIDE ARMS FOR CONTROL RODS FOR THE EXPERIMENTAL GAS-COOLED REACTOR

VI. CLEANLINESS

The bottom guide arms shall be cleaned in accordance with 3.4.2.1.2 (Wiping) of MET-RI-2.

VII. TEST REQUIREMENTS

A. Visual – One hundred percent visual inspection shall be performed under direct daylight-type fluorescent lighting of at least 100 foot-candles to ensure compliance with the requirements of Sections V and VI of this specification.

B. Dimensional – One hundred percent dimensional inspection shall be performed to ensure compliance with the requirements of Section IV of this specification.

C. Penetrant – One hundred percent liquid dye-penetrant inspection shall be performed in accordance with the requirements of MET-RI-1 to ensure conformance with the requirements of Section V of this specification.

VIII. TEST REPORTS

A mill certification of the chemical analysis and physical properties and a certified statement of compliance with dimensional, visual, and penetrant requirements shall be furnished in five copies to the Company by the Seller at time of shipment.

EGCR CONTROL ROD SPECIFICATION
METALLURGY DIVISION
OAK RIDGE NATIONAL LABORATORY

Spec. No. EGCR-3-7
Date: March 6, 1961
Page 1 of 1

Union Carbide Nuclear Company
A Division of Union Carbide Corporation
Oak Ridge, Tennessee

Subject: SPECIFICATION FOR INCONEL-X SPRING FOR CONTROL RODS FOR THE EXPERIMENTAL GAS-COOLED REACTOR

I. SCOPE

This specification applies to the Inconel-X spring for the control rods for the Experimental Gas-Cooled Reactor.

II. REFERENCES

A. Drawing:

A-RD-9982 "Compression Spring, Segmented Control Rod, EGCR"

B. Specification:

AMS 5698 A, "Alloy Wire, Corrosion and Heat Resistant Inconel X, No. 1 Temper," Revision 9-15-57.

III. MANUFACTURING REQUIREMENTS

The Inconel-X spring shall be manufactured in accordance with Dwg. A-RD-9982, Specification AMS 5698 A, and with this specification.

IV. DIMENSIONS AND TOLERANCES

A. Wire — The diameter of the wire shall be 0.3065 in. ± 0.0015 in. (Ref. Section 8.1 of AMS 5698 A).

B. Spring — The dimensions and tolerances of the spring shall conform to the dimensions and tolerances specified on Dwg. A-RD-9982.

V. TEST REPORTS

The Seller shall furnish to the Company five copies of the statements and test reports required by Sections 9.1 and 9.2 of AMS 5698 A and a certified statement of compliance with the dimensional requirements in Section IV of this specification at time of shipment.

EGCR CONTROL ROD SPECIFICATION
METALLURGY DIVISION
OAK RIDGE NATIONAL LABORATORY

Spec. No. EGCR-3-8
Date: March 6, 1961
Page 1 of 3

Union Carbide Nuclear Company
A Division of Union Carbide Corporation
Oak Ridge, Tennessee

Subject: SPECIFICATION FOR STAINLESS STEEL TUBING FOR CONTROL RODS FOR THE EXPERIMENTAL GAS-COOLED REACTOR

I. SCOPE

This specification applies to seamless stainless steel tubing for the control rods for the Experimental Gas-Cooled Reactor. The tubing shall be fabricated of Grade TP 304 stainless steel.

II. REFERENCES

A. Drawings:

1. D-RD-10143B "Details, Segmented Control Rod, EGCR, Sheet I" R

2. D-RD-10144B "Details, Segmented Control Rod, EGCR, Sheet II" R

3. E-RD-10145D "Details and General Arrangement, Control Rod, EGCR" R

B. Specifications:

1. ASTM Designation: A 269 – 59 "Standard Specifications for Seamless and Welded Austenitic Stainless Steel Tubing for General Service"

2. MET-RI-1 "Tentative Specification for Liquid-Penetrant Inspection of Items for High-Temperature Nuclear Service," Revision No. 2

3. MET-RI-2 "Tentative Specification for Cleanliness of Items for Use in High-Temperature Nuclear Service"

III. MANUFACTURING REQUIREMENTS

Tubes shall be extruded or pierced, and cold drawn or reduced to specified size.

IV. CHEMICAL COMPOSITION

The chemical composition shall conform to the requirements for Grade TP 304 of ASTM Designation: A 269 – 59.

Subject: SPECIFICATION FOR STAINLESS STEEL TUBING FOR CONTROL RODS FOR THE EXPERIMENTAL GAS-COOLED REACTOR

V. DIMENSIONS AND TOLERANCES

A. The dimensions, with tolerances, are as follows:

Component	Diameter (in.)	Wall Thickness (in.)	Length	
Upper Tube Item 8	3.250 ± 0.010 o.d.	0.120 ± 0.010	10-1/8 ± 1/32 in.	
Lower Tube Item 7	3.250 ± 0.010 o.d.	0.120 ± 0.010	4 ft 1-3/16 ± 1/32 in.	
Inner Tube Item 11	2.545 ± 0.005 o.d.	0.075 ± 0.001	4 ft 9-3/32 ± 1/32 in.	R
Inner Tube Item 12	2.545 ± 0.005 o.d.	0.075 ± 0.001	4 ft 9-13/32 ± 1/32 in.	R
Outer Tube Item 9	3.140 ± 0.005 i.d.	0.055 ± 0.006	4 ft 10-31/32 ± 1/32 in.	

The tubing shall be straight within 0.030 in. per 3-ft length.

VI. SURFACE FINISH AND CONDITION

All surfaces of the tubes shall conform to the finishes specified on Drawings D-RD-10143B, D-RD-10144B, or E-RD-10145D, as applicable. The surfaces shall be free of pits, nicks, gouges, etc., which exceed 10% of the nominal wall thickness. Additionally, the tubing shall be free of cracks, seams, laps and other crack-like defects, intergranular attack, scale, oxide film, dirt, oil, grease, or other foreign material. R

VII. CLEANLINESS

The tubing shall be cleaned in accordance with 3.4.2.1.3 (Solvent Immersion) of MET-RI-2.

VIII. TEST REQUIREMENTS

A. Visual – One hundred percent visual inspection shall be performed under direct daylight-type fluorescent lighting of at least 100-foot-candles to ensure compliance with the requirements of Sections VI and VII of this specification.

Subject: SPECIFICATION FOR STAINLESS STEEL TUBING FOR CONTROL RODS FOR THE EXPERIMENTAL GAS-COOLED REACTOR

VIII. TEST REQUIREMENTS (continued)

B. Dimensional – One hundred percent dimensional inspection shall be performed to ensure compliance with the requirements of Section V of this specification.

C. Penetrant – One hundred percent liquid dye-penetrant inspection shall be performed in accordance with the requirements of MET-RI-1 to ensure conformance with the requirements of Section VI of this specification.

IX. TEST REPORTS

A mill certification of the chemical analysis and physical properties and a certified statement of compliance with dimensional, visual, and penetrant requirements shall be furnished in five copies to the Company by the Seller at time of shipment.

EGCR CONTROL ROD SPECIFICATION
METALLURGY DIVISION
OAK RIDGE NATIONAL LABORATORY

Spec. No. EGCR-3-9
Date: March 6, 1961
Page 1 of 2

Union Carbide Nuclear Company
A Division of Union Carbide Corporation
Oak Ridge, Tennessee

Subject: SPECIFICATION FOR BORON CARBIDE BUSHINGS FOR CONTROL RODS FOR THE EXPERIMENTAL GAS-COOLED REACTOR

I. SCOPE

This specification applies to boron carbide bushings for the control rods for the Experimental Gas-Cooled Reactor.

II. REFERENCES

Dwg. D-RD-10144B "Details, Segmented Control Rod, EGCR, Sheet II" R

III. MANUFACTURING REQUIREMENTS

The boron carbide bushings shall be manufactured in accordance with Dwg. D-RD-10144B and with this specification. R

IV. COMPOSITION AND DENSITY

The composition and density shall be such so as to insure 145 grams minimum of boron per pellet. The boron shall be natural boron (containing 18.7 ± 1% B^{10}). R

V. DIMENSIONS AND TOLERANCES

The boron carbide bushing shall conform to the following dimensions and tolerances:

Outside Diameter	3.090 ± 0.005 in.	
Inside Diameter	2.615 ± 0.010 in.	
Concentricity of Diameters	0.005 inches TIR	R
Wall Thickness	0.240 in. (Ref)	
Length	3.075 ± 0.010 in.	
Perpendicularity	The cylinder walls shall be perpendicular to the end faces within ± 0 deg, 2 min.	

VI. SURFACE FINISH AND CONDITION

Chipping on the inner and outer cylindrical surfaces shall not exceed 5% of the inner and outer cylindrical surface areas, respectively. Chipping on the surface of each end of the bushing shall not exceed 5% of the surface area of one end of the bushing. No chipped area shall be greater than 1/4 in. in largest lateral dimension nor greater than 1/16 in. deep.

Subject: SPECIFICATION FOR BORON CARBIDE BUSHINGS FOR CONTROL RODS FOR THE EXPERIMENTAL GAS-COOLED REACTOR

VII. TEST REQUIREMENTS

A. Nondestructive:

1. Visual – The bushings shall be subjected to a 100% visual inspection under direct daylight-type fluorescent lighting of at least 100 footcandles to ensure conformance with Section VI of this specification.

2. Dimensional – The bushings shall be subjected to a 100% dimensional inspection to ensure conformance with Section V of this specification.

3. Weight – The bushings shall be subjected to a 100% weight inspection to ensure conformance with Section IV of this specification.

B. Destructive:

1. Two bushings from each production or blend lot of boron carbide shall be selected at random. At least one total boron and one isotopic analysis shall be performed by the fabricator on each of the bushings. A duplicate sample from each of these bushings shall be sent to the Company for check analysis.

2. If the total boron and isotopic boron contents do not meet the requirements specified in Section IV of this specification, the entire quantity from that production or blend lot shall be rejected unless the fabricator performs sufficient additional analyses to ensure a 95% confidence level that the bushings are within the specified limits.

VIII. TEST REPORTS

Five copies of the certified chemical analyses for total boron and isotopic boron content for each production or blend lot of boron carbide and a certified statement of compliance with the visual, dimensional, and density requirements, as specified in Section VII of this specification, shall be submitted to the Company by the Seller at the time of shipment.

EGCR CONTROL ROD SPECIFICATION
METALLURGY DIVISION
OAK RIDGE NATIONAL LABORATORY

Spec. No. EGCR-3-10
Date: March 6, 1961
Page 1 of 3

Union Carbide Nuclear Company
A Division of Union Carbide Corporation
Oak Ridge, Tennessee

Subject: SPECIFICATION FOR STAINLESS STEEL CENTRAL ROD FOR CONTROL RODS FOR THE EXPERIMENTAL GAS-COOLED REACTOR

I. SCOPE

This specification applies to the central rod for the control rods for the Experimental Gas-Cooled Reactor. The rod shall be fabricated of Grade TP 347 H stainless steel.

II. REFERENCES

A. Drawing:

E-RD-10145 "Details and General Arrangement, Segmented Control Rod, EGCR"

B. Specifications:

1. MET-RM-A 276 – TP 347 H-MOD. 1 "Tentative Specification for Austenitic Steel Bars for High-Temperature Nuclear Service," Revision No. 4

III. MANUFACTURING REQUIREMENTS

The central rod shall conform to the requirements of this specification and MET-RM-A 276 – TP 347 H-MOD. 1, including the additional requirements A1., Fluid-Penetrant Inspection, and A2., Ultrasonic Test, but excluding additional requirement A3,, Corrosion Test. The material shall be hot-rolled, annealed, round bar.

In addition the following change shall be made in Ultrasonic Tests. R
Delete Paragraphs (e) and (f) in their entirety, and substitute the following in lieu thereof:

(e) The equipment shall be calibrated with the use of the appropriate reference standard. The maximum amplitude of the back reflection signal from an area free of discontinuities shall be adjusted to 95 percent of full amplitude. Without changing the instrument sensitivity the maximum reduction in the back reflection shall be noted when the transducer is centered over the 1/32-inch-diameter flat-bottomed hole. Care shall be taken to assure that the signal loss is due to the drop in back reflection caused by the 1/32-inch-diameter bottom and not that caused by the side of the hole. This will necessitate measurements of back reflections without the bar being rotated.

Subject: SPECIFICATION FOR STAINLESS STEEL CENTRAL ROD FOR CONTROL RODS FOR THE EXPERIMENTAL GAS-COOLED REACTOR

III. MANUFACTURING REQUIREMENTS (continued)

(f) Any discontinuity which causes the back reflection to drop as much as 50 percent of the drop caused by the 1/32-inch-diameter hole shall be evaluated without the rod being rotated. Bars containing discontinuities which produce a drop in back reflection equal to or greater than that caused by the end of the 1/32-inch-diameter hole shall be rejected.

If a drop in back reflection is encountered equal to that caused by the 1/32-inch-diameter hole but which may be due to metallurgical conditions, the bar will be considered unacceptable until the supplier has demonstrated to the satisfaction of the Company's inspector that discontinuities do not exist. This may be done by metallographic examination.

This inspection may be carried out separately or in conjunction with the inspection with respect to the 0.005-inch notch, provided all requirements of the specification are met.

IV. DIMENSIONAL REQUIREMENTS

The finished diameter of the central rod shall be 0.375 ± 0.005 in.

V. CONTROL SAMPLE

The Seller shall furnish to the Company for testing purposes a 12-in. sample from each central rod used. The sample shall be representative of the finished part and shall not be taken until the entire rod has met all of the requirements of this specification.

VI. SURFACE FINISH AND CONDITIONS

The circumferential surface of the central rod shall have a finish of 32 rms or better. Defects may be removed by grinding or other means, provided their removal does not encroach on the minimum specified dimensions. The area of defect removal shall be blended uniformly with the original surface using a minimum taper ratio of 50 to 1.

All surfaces shall be free of pits, nicks, gouges, etc., which exceed 0.005 in. in depth. Additionally, the rod shall be free of cracks, seams, laps and other crack-like defects, intergranular attack, scale, oxide film, dirt, oil, grease, or other foreign material.

Subject: SPECIFICATION FOR STAINLESS STEEL CENTRAL ROD FOR CONTROL RODS FOR THE EXPERIMENTAL GAS-COOLED REACTOR

VII. CLEANLINESS

The rod shall be cleaned in accordance with 3.4.2.1.2 (Wiping) of MET-RI-2.

VIII. TEST REQUIREMENTS

A. Visual – One hundred percent visual inspection shall be performed under direct daylight-type fluorescent lighting of at least 100 foot-candles to ensure conformance with Sections VI and VII above.

B. Dimensional – One hundred percent dimensional inspection shall be performed to ensure conformance with Dwg. E-RD-10145 and Section IV above.

C. Liquid Penetrant – One hundred percent liquid dye-penetrant inspection shall be performed in accordance with MET-RI-1 to ensure conformance with Section VI above.

IX. TEST REPORTS

The statement and reports required in Section 13 of MET-RM-A 276 – TP 347 H-MOD. 1 and a certified statement of compliance with dimensional, visual, and penetrant requirements shall be furnished in five copies to the Company by the Seller at time of shipment.

APPENDIX I

EGCR CONTROL ROD SPECIFICATION
METALLURGY DIVISION
OAK RIDGE NATIONAL LABORATORY

Union Carbide Nuclear Company
A Division of Union Carbide Corporation
Oak Ridge, Tennessee

Subject: SPECIFICATION FOR THE CONTROL RODS FOR THE EXPERIMENTAL GAS-COOLED REACTOR

SUGGESTED ASSEMBLY PROCEDURE

A. Subassemblies:

1. Stainless Steel Section

a. Place spacer segment, Item 17, on mandrel.

b. Slide lower tube, Item 7, over Item 17.

c. Plug weld Item 17 to Item 7 in two places.

d. Repeat steps a, b, and c for second spacer segment, Item 17.

e. Insert bottom closure Type I, Item 21, into bottom end of Item 7, and weld (BN-21).

f. Position lower spring support, Item 3, into top end of Item 7 and bottom end of upper tube, Item 8, and weld (BN-2).

2. Spider-Central Rod

Weld (B-1) central rod, Item 15, to spider, Item 18.

3. Filter and Top Closure

Place filter, Item 20, on top closure, Item 4, and tack weld four places spaced 90 deg apart.

4. Inner Tube, Filter, and Top Closure Subassembly, and Spacer Segments*

a. Place spacer segment, Item 16, on mandrel.

bi. Slide inner tube, Type I, Item 11, over spacer segment, Item 16.

or bii. Slide inner tube, Type II, Item 12, over spacer segment, Item 16.

ci. Spot weld, two places, Item 11 to Item 16.

or cii. Spot weld, two places, Item 12 to Item 16.

---

*In Sections A4 and succeeding sections, steps designated by i pertain to the upper and middle B_4C-bearing sections. Steps designated by ii pertain to the lower B_4C-bearing section. Steps without i or ii designation pertain to all three B_4C-bearing sections.

EGCR CONTROL ROD SPECIFICATION
METALLURGY DIVISION
OAK RIDGE NATIONAL LABORATORY

Subject: SPECIFICATION FOR THE CONTROL RODS FOR THE EXPERIMENTAL GAS-COOLED REACTOR

SUGGESTED ASSEMBLY PROCEDURE (continued)

di. Repeat steps a, bi, and ci for second spacer segment, Item 16.

or dii. Repeat steps a, bii, and cii for second spacer segment, Item 16.

ei. Insert filter and top closure subassembly, Part 3, above, into upper end of Item 11 and weld (BN-5 or -9).

or eii. Insert filter and top closure subassembly, Part 3, above, into upper end of Item 12 and weld (BN-13).

fi. and fii. Copperplate surfaces of inner tube, filter, and top closure subassembly.

5. Outer Tube — Bottom Closure

ai. Place outer tube, Item 9, on bottom closure, Type II, Item 13, and weld (BN-7 or -11).

or aii. Place outer tube, Item 9, on bottom closure, Type III, Item 14, and weld (BN-14).

bi. and bii. Copperplate surfaces of outer tube and bottom closure subassembly.

ci. and cii. Oxidize outer surface of outer tube.

6. B_4C-Containing Sections

ai. Place B_4C bushings, Item 10, on inner tube subassembly, Part 4. fi., above.

or aii. Place B_4C bushings, Item 10, on inner tube subassembly, Part 4. fii., above.

bi. Place outer tube subassembly, 5 bi., above, over B_4C onto top closure and weld (BN-4 or -8).

or bii. Place outer tube subassembly, 5. bii., above, over B_4C onto top closure and weld (BN-12).

ci. Weld (BN-6 or -10) bottom closure to inner tube.

or cii. Weld (BN-15) bottom closure to inner tube.

EGCR CONTROL ROD SPECIFICATION
METALLURGY DIVISION
OAK RIDGE NATIONAL LABORATORY

Subject: SPECIFICATION FOR THE CONTROL RODS FOR THE EXPERIMENTAL GAS-COOLED REACTOR

SUGGESTED ASSEMBLY PROCEDURE (continued)

B. Control Rod Assembly:

1. Place spider and central rod subassembly, Part A2, above, into upper spring support, Item 2.

2. Weld (B-3) reducer, Item 1, to upper spring support, Item 2.

3. Insert spring, Item 6, into upper tube, Item 8, and position against lower spring support, Item 3, of stainless steel section. Part A1.f., above.

4. Slide the reducer, spider-central rod and upper spring support into stainless steel section, passing the central rod through the central opening formed by the two spacer segments.

5. Slide two B_4C-containing sections with bottom closure, Item 13, over the central rod, passing the central rod through the central openings formed by the two spacer segments in each section.

6. Slide one B_4C-containing section with bottom closure, Item 14, over the central rod, passing the central rod through the central opening formed by the two spacer segments.

7. Compress the spring, thereby extending the central rod 1-1/4 in. past the end of the lower B_4C-containing section.

8. Weld (B-16) the bottom guide, Item 5, to the central rod.

9. Weld (BN-17, -18, -19, -20) four each bottom guide arms, Item 19, to the bottom guide.

10. Release the spring, allowing the bottom closure, Item 14, of the final B_4C-containing section to contact the bottom guide arms, Item 19.

11. Weld bottom guide arms to the bottom closure.

APPENDIX II

KIND OF WIRE INCONEL X – NO. 1 TEMPER

SIZE OF WIRE U. S. WIRE GA. 1.0 DECIMAL 0.3065 INCH

SPRING WORKS OVER 1/2 INCH ROD; INSIDE 3.000 INCH HOLE

DIAM COIL : ~~OUTSIDE~~ INSIDE 2 9/32 ± 1/32 INCH; MEAN DIAM 2.588 INCH

NUMBER ACTIVE COILS 13 1/2 TOTAL NUMBER COILS 15 1/2

FREE LENGTH 7 ± 1/16 INCH; SOLID HEIGHT 4 3/4 ± 1/16 INCH

RATE 50 LBS./IN; STRESS AT SOLID HEIGHT 30000 PSI

WEIGHT LENGTH 6 INCHES WITH 50 ± 5 POUNDS LOAD

WEIGHT LENGTH 4 3/4 INCHES WITH 112.5 ± 12 POUNDS LOAD

TYPE OF ENDS ENDS SQUARED AND GROUND

MAXIMUM LEAN 4° AT LENGTH OF 6 INCHES

NATURE OF LOAD (CHECK ONE)
- RAPIDLY FLUCTUATING ____ CYCLES/SEC ____
- OCCASIONALLY FLUCT'G ____ CYCLES/24 HRS ____
- STEADY X

TYPE OF ATMOSPHERE HELIUM DESIRED LIFE 25 YRS

TEMPERATURES: NORMAL OPERATING 500 °F, MAXIMUM 1000 °F, FOR 1 HRS

SURFACE TREATMENT PICKLE TO REMOVE COATING

HEAT TREATMENT COLD COIL, AGE AT 1350°F FOR 16 HRS, HEAT LOAD FOR 1 HOUR AT 850°F AT LENGTH OF 5 INCHES.

ASSEM USED ON E-10145

REV	DCN	APPD	DATE		
				DSGND s/W. G. Cobb 7-8-60	OAK RIDGE NATIONAL LABORATORY
				CKD s/A. P. Marquardt	COMPRESSION SPRING
				MTLGST	
				PROJ ENGS/John W. Michel 9-6-60	SEGMENTED CONTROL ROD EGCR –
				APPRD s/E. J. Breeding/APM	
					JN 264 A-RD -9982

THIS DESIGN IS THE PROPERTY OF UNION CARBIDE NUCLEAR COMPANY A DIVISION OF UNION CARBIDE CORPORATION
PLEASE RETURN PRINT TO BOX P, OAK RIDGE, TENN.

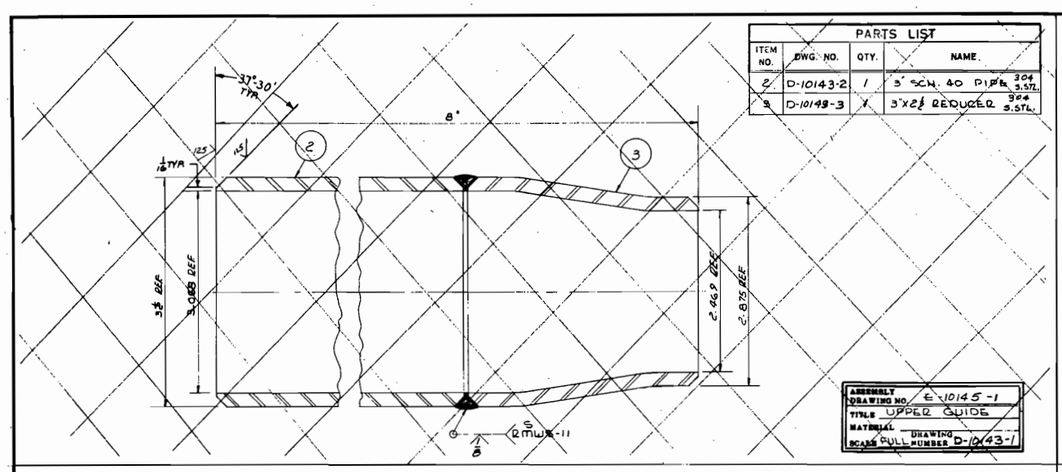

PARTS LIST			
ITEM NO.	DWG. NO.	QTY.	NAME
2	D-10143-2	1	3" SCH. 40 PIPE 304 S.STL.
3	D-10143-3	1	3"x2½ REDUCER 304 S.STL.

ASSEMBLY DRAWING NO. E-10145-1
TITLE UPPER GUIDE
MATERIAL
SCALE FULL DRAWING NUMBER D-10143-1

PARTS LIST			
ITEM NO.	DWG. NO.	QTY.	NAME

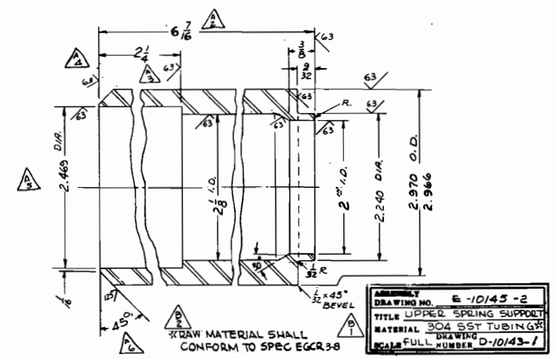

ASSEMBLY DRAWING NO. E-10145-2
TITLE UPPER SPRING SUPPORT
MATERIAL 304 SST TUBING
SCALE FULL DRAWING NUMBER D-10143-1

PARTS LIST			
DWG. NO.	QTY.	NAME	

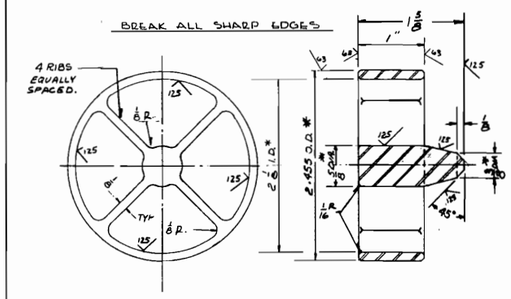

* DIAMETERS TO BE CONCENTRIC WITHIN .002 T.I.R.

RAW MATERIAL SHALL CONFORM TO SPEC EGCR 3-5

ASSEMBLY DRAWING NO. E-10145-18
TITLE SPIDER
MATERIAL S. STL 347
SCALE FULL DRAWING NUMBER D-10143-2

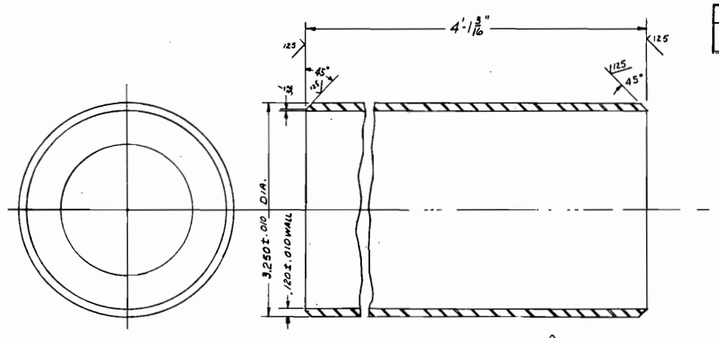

RAW MATERIAL SHALL CONFORM TO SPEC EGCR 3-8

PARTS LIST			
ITEM NO.	DWG. NO.	QTY.	NAME

ASSEMBLY DRAWING NO. E-10145-7
TITLE LOWER TUBE
MATERIAL 304 S.STL.
SCALE FULL DRAWING NUMBER D-10143-3

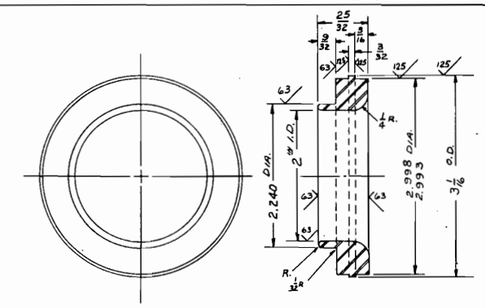

RAW MATERIAL SHALL CONFORM TO SPEC EGCR 3-8

ASSEMBLY DRAWING NO. E-10145-3
TITLE LOWER SPRING SUPPORT
MATERIAL 304 SST TUBING
SCALE FULL DRAWING NUMBER D-10143-4

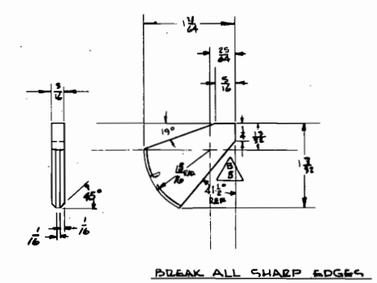

BREAK ALL SHARP EDGES

125 FINISH ALL OVER

RAW MATERIAL SHALL CONFORM TO SPEC EGCR 3-6

ASSEMBLY DRAWING NO. E-10145-19
TITLE BOTTOM GUIDE ARM
MATERIAL S. STL 347
SCALE FULL DRAWING NUMBER D-10143-5

D-RD -10143

PARTS LIST			
ITEM NO.	DWG. NO.	QTY.	NAME

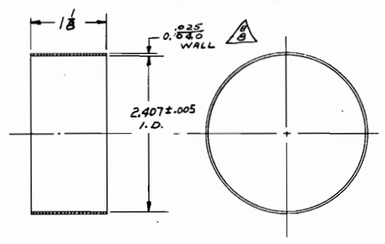

PRODUCED IN ACCORDANCE WITH SPEC. EGCR-3-4

ASSEMBLY DRAWING NO. E-10145-20
TITLE BROGARD FILTER
MATERIAL 347 OR 304 S. STL.
SCALE FULL DRAWING NUMBER D-10143-6

PARTS LIST			
ITEM NO.	DWG. NO.	QTY.	NAME

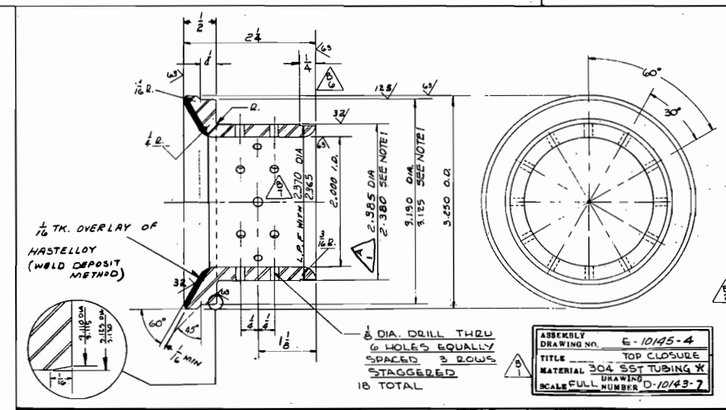

RAW MATERIAL SHALL CONFORM TO SPEC. EGCR 3-8

ASSEMBLY DRAWING NO. E-10145-4
TITLE TOP CLOSURE
MATERIAL 304 SST TUBING
SCALE FULL DRAWING NUMBER D-10143-7

DETAILS - SEGMENTED CONT'L ROD	D-10144
ASSEM. SEGMENTED CONTROL ROD	E-10145
REFERENCE DRAWINGS	DWG. NO.

REVISION			
B	SEE DCN 2244	F.M. 1/16/61	
A	SEE DCN 1914	F.M. 12/14/61	WHB

DESIGN SUPV.			
PROJECT ENGR.		1/16/61	
		1/16/61	
DRAWN	SIG.	6/19/60	
CHECKED	WM. M. BROWN	5/24/60	

BREAK ALL SHARP EDGES UNLESS OTHERWISE SPECIFIED.
TOLERANCE UNLESS OTHERWISE SPECIFIED
FRACTIONS ± 1/64
DECIMALS ± .005
ANGLES ± 1°

SCALE AS NOTED

OAK RIDGE NATIONAL LABORATORY

DETAILS SHEET I
SEGMENTED CONTROL ROD
E.G.C.R.

Job 264 D-RD -10143B

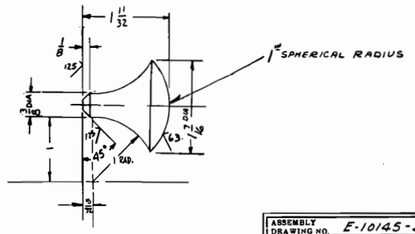

RAW MAT. IN ACCORDANCE WITH E.G.C.R. 3-5

ASSEMBLY DRAWING NO.	E-10145-5
TITLE	BOTTOM GUIDE
MATERIAL	347 S.STL.
SCALE FULL	DRAWING NUMBER D-10144-10

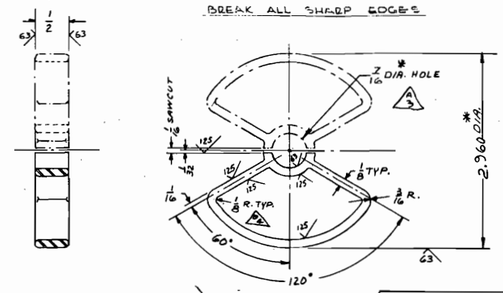

* DIAMETERS TO BE CONCENTRIC WITHIN .002 T.I.R.

RAW MAT. IN ACCORDANCE WITH EGCR 3-3

ASSEMBLY DRAWING NO.	E-10145-17
TITLE	SPACER SEGMENT I
MATERIAL	S. STL 304
SCALE FULL	DRAWING NUMBER D-10144-1

PARTS LIST		
DWG. NO.	QTY.	NAME

RAW MAT. IN ACCORDANCE WITH EGCR 3-8

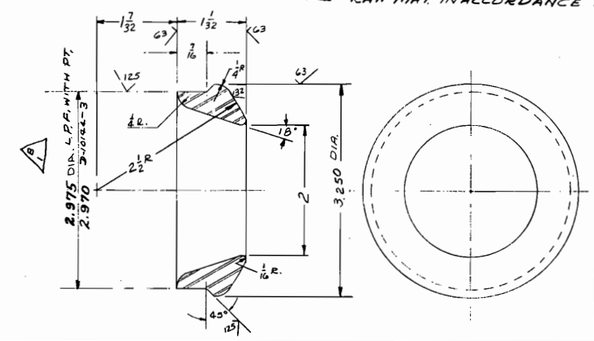

ASSEMBLY DRAWING NO.	E-10145-21
TITLE	BOTTOM CLOSURE TYPE I
MATERIAL	S. STL 304 TUBING
SCALE FULL	DRAWING NUMBER D-10144-2

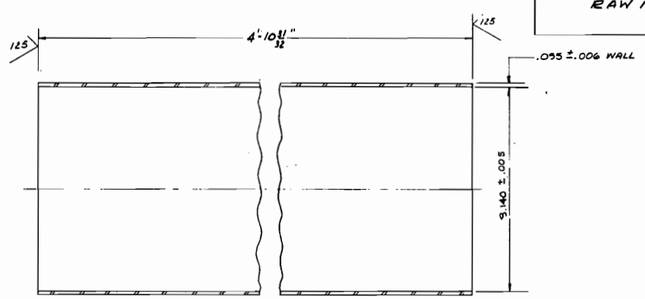

RAW MAT. IN ACCORDANCE WITH EGCR 3-8

ASSEMBLY DRAWING NO.	E-10145-9
TITLE	OUTER TUBE
MATERIAL	S. STL 304
SCALE FULL	DRAWING NUMBER D-10144-3

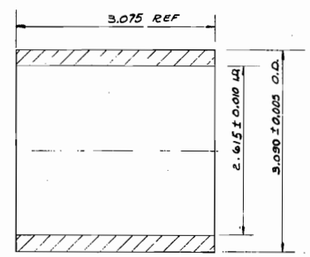

I.D. & O.D. TO BE CONCENTRIC WITHIN .005 T.I.R.

PRODUCED IN ACCORDANCE WITH EGCR 3-9

ASSEMBLY DRAWING NO.	E-10145-10
TITLE	BUSHING
MATERIAL	B4C
SCALE FULL	DRAWING NUMBER D-10144-4

PARTS LIST			
ITEM NO.	DWG. NO.	QTY.	NAME

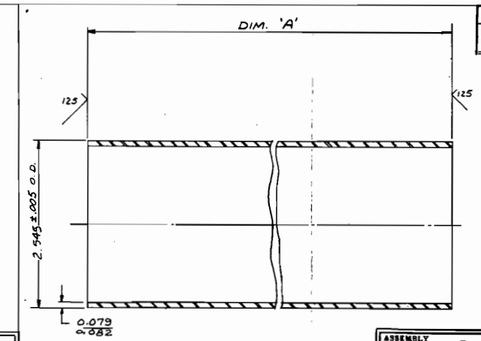

PART #	DIM. 'A'
D-10144-5	4'-9 3/32"
D-10144-6	4'-9 11/32"

RAW MAT. IN ACCORDANCE WITH EGCR 3-8

ASSEMBLY DRAWING NO.	E-10145-11
TITLE	INNER TUBE TYPE I
MATERIAL	304 S.STL.
SCALE FULL	DRAWING NUMBER D-10144-5

ASSEMBLY DRAWING NO.	E-10145-12
TITLE	INNER TUBE TYPE II
MATERIAL	304 S.STL.
SCALE FULL	DRAWING NUMBER D-10144-6

D-RD -10144

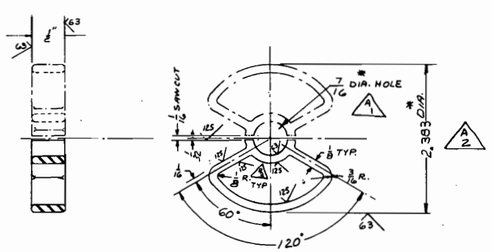

BREAK ALL SHARP EDGES

* DIAMETERS TO BE CONCENTRIC WITHIN .002 T.I.R.

RAW MAT. IN ACCORDANCE WITH E,G,C,R, 3-3

ASSEMBLY DRAWING NO.	E-10145-16
TITLE	SPACER SEGMENT II
MATERIAL	S. STL 304
SCALE FULL	DRAWING NUMBER D-10144-7

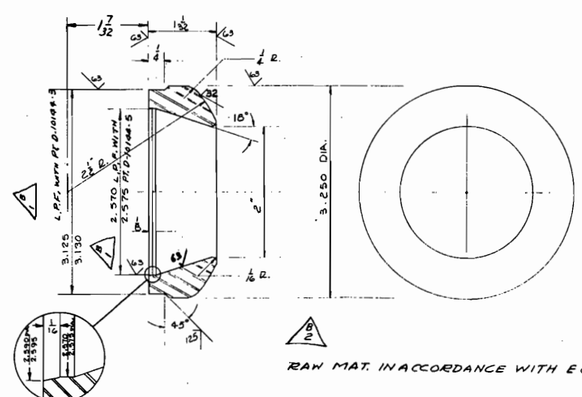

RAW MAT. IN ACCORDANCE WITH EGCR 3-8

ASSEMBLY DRAWING NO.	E-10145-13
TITLE	BOTTOM CLOSURE TYPE II
MATERIAL	S. STL 304
SCALE FULL	DRAWING NUMBER D-10144-8

RAW MAT. IN ACCORDANCE WITH EGCR 3-8

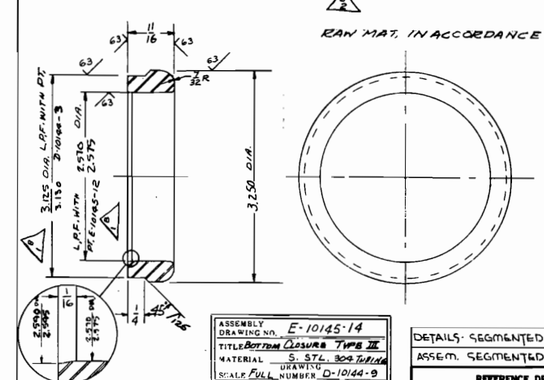

ASSEMBLY DRAWING NO.	E-10145-14
TITLE	BOTTOM CLOSURE TYPE III
MATERIAL	S. STL. 304 TUBING
SCALE FULL	DRAWING NUMBER D-10144-9

B	SEE DCN 2244	F.M.	9/6/62
A	SEE DCN 1914	F.M.	5/2/61
REVISION		BY	DATE

DETAILS SEGMENTED CONTROL ROD	D-10143
ASSEM. SEGMENTED CONTROL ROD	E-10145
REFERENCE DRAWINGS	DWG. NO.

OAK RIDGE NATIONAL LABORATORY

DETAILS SHEET II
SEGMENTED CONTROL ROD
E.G.C.R.

BREAK ALL SHARP EDGES UNLESS OTHERWISE SPECIFIED.
TOLERANCE UNLESS OTHERWISE SPECIFIED:
FRACTIONS ± 1/64
DECIMALS ± .005
ANGLES ± 1°

SIG.

SCALE AS NOTED | JOB 264 | D-RD -10144 B

PARTS LIST

ITEM NO.	DWG. NO.	QTY.	NAME
2	D-10143-1	1	UPPER SPRING SUPPORT
3	D-10143-4	1	LOWER SPRING SUPPORT
4	D-10143-7	3	TOP CLOSURE
5	D-10144-10	1	BOTTOM GUIDE
6	A-9982	1	SPRING
7	D-10143-3	1	LOWER TUBE
8	E-10145-8	1	UPPER TUBE 18½" OA
9	D-10144-3	3	OUTER TUBE
10	D-10144-4	57	SUBBING B_4C
11	D-10144-5	2	INNER TUBE TYPE I
12	D-10144-6	1	INNER TUBE TYPE II
13	D-10144-8	2	BOTTOM CLOSURE TYPE I
14	D-10144-9	1	BOTTOM CLOSURE TYPE II
15	E-10145-15	1	CENTRAL ROD
16	D-10144-7	10	SPACER SEGMENT TYPE II
17	D-10144-1	2	SPACER SEGMENT TYPE I
18	D-10143-2	1	SPIDER
19	D-10143-5	4	BOTTOM GUIDE ARM
20	D-10143-6	3	FILTER
21	D-10144-2	1	BOTTOM CLOSURE TYPE I

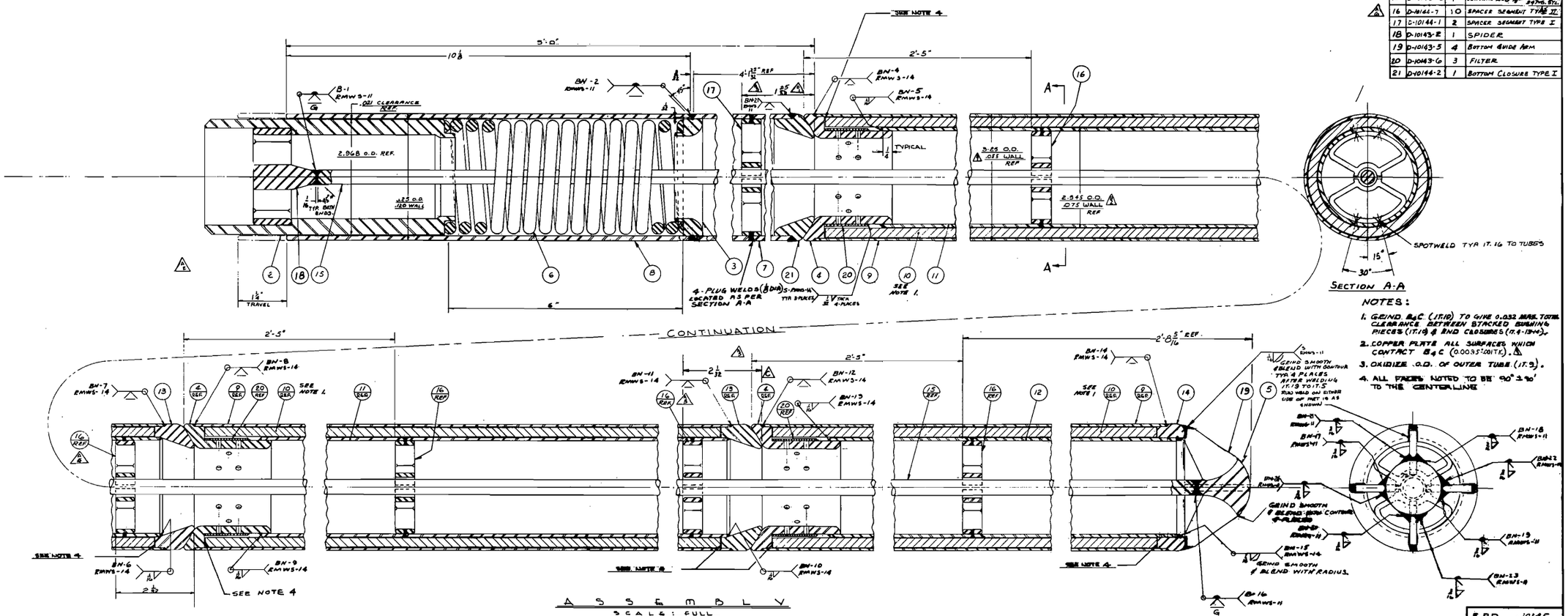

NOTES:

1. GRIND B_4C (T.10) TO GIVE 0.032 MAX. TOTAL CLEARANCE BETWEEN STACKED SUBBING PIECES (T.10) & END CLOSURES (T.13-T.14).
2. COPPER PLATE ALL SURFACES WHICH CONTACT B_4C (0.0035"-.001" T.K.).
3. OXIDIZE O.D. OF OUTER TUBE (T.9).
4. ALL FACES NOTED TO BE 90° ± 30' TO THE CENTERLINE

E-RD -10145

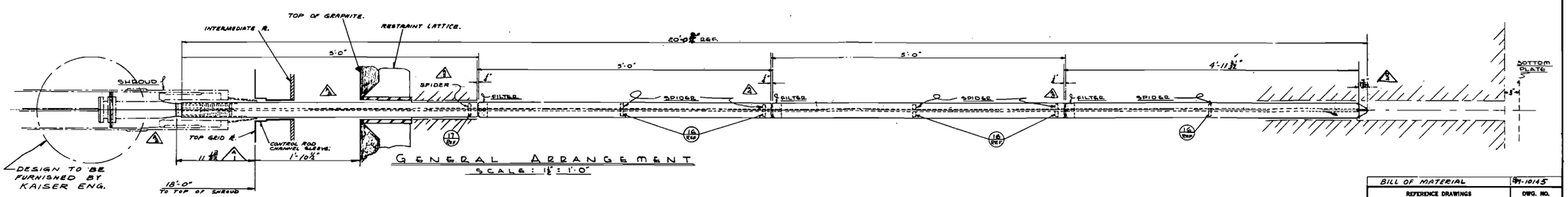

D	JEB DCN 2244	FM	9/21/61
C	SEE DCN 2119	WHB	1/31/61
B	SEE DCN 1970	JTD	10/11/60
A	SEE DCN 1	FM	7/26/60

DRAWN		
CHECKED		
ENGINEER	SIG.	
CHAIRMAN		
SCALE AS NOTED	JOB 264	E-RD -10145 D

BILL OF MATERIAL 84-10145

REFERENCE DRAWINGS DWG. NO.

OAK RIDGE NATIONAL LABORATORY

DETAILS & GENERAL ARRANGEMENT SEGMENTED CONTROL ROD E.G.C.R.

APPENDIX III

BIBLIOGRAPHY

DeVan, J. H., "Reactions of Reactor Materials with Contaminants Outgassed from Graphite," pp 698–732 in Proceedings of US/UK Meeting on Compatibility Problems of Gas-Cooled Reactors held at Oak Ridge National Laboratory, February 24–26, 1960, TID-7597, Book 2 (March 3, 1961).

Inouye, H., and M. R. D'Amore, ANP Proj. Quart. Progr. Rept. Mar. 10, 1956, ORNL-2061, pp 154–155.

Inouye, H., and M. R. D'Amore, Met. Div. Semiann. Progr. Rept. Apr. 10, 1956, ORNL-2080, pp 120–123.

Manly, W. D., and J. H. Coobs, "The Experimental Gas-Cooled Reactor," pp 49–82 in Nuclear Metallurgy, Vol. 8 IMD Spec. Rep. Ser. No. 11, The Metallurgy Society of AIME (1962).

Martin, W. R., GCR Semiann. Progr. Rept. Sept. 30, 1962, ORNL-3372, pp 305–306.

Martin, W. R., EGCRP Semiann. Progr. Rept. Mar. 31, 1963, ORNL-3445 (in press).

McCoy, H. E., "The Influence of Various Gaseous Environments on the Creep-Rupture Properties of Nuclear Materials Selected for High-Temperature Service," pp 263–296 in Conference on Corrosion of Reactor Materials, June 4–8, 1962, Proceedings, Vol. I, International Atomic Energy Agency Vienna (1962).

McCoy, H. E., The Influence of Various Gaseous Environments on the Creep-Rupture Properties of Nuclear Materials Selected for High-Temperature Service, ORNL-TM-326 (Sept. 19, 1962).

McCoy, H. E., and D. A. Douglas, "Effect of Environment on the Creep Properties of Type 304 Stainless Steel at Elevated Temperatures," p 748 in Proceedings of US/UK Meeting on Compatibility Problems of Gas-Cooled Reactors held at Oak Ridge National Laboratory, February 24–26, 1960, TID-7597, Book 2 (March 3, 1961).

McCoy, H. E., W. R. Martin, and J. R. Weir, "Effect of Environment on the Mechanical Properties of Metals," pp 163–176 in Procedures of the Institute of Environmental Sciences National Meeting, April 5, 6, 7, 1961, Washington, D. C., Institute of Environmental Sciences, Mt. Prospect, Illinois (1961).

Michel, J. W., GCR Quart. Progr. Rept. Dec. 31, 1960, ORNL-3049, p 118.

Michel, J. W., GCR Quart. Progr. Rept. Mar. 31, 1961, ORNL-3102, p 22.

Michel, J. W., and G. Samuels, GCR Quart. Progr. Rept. June 30, 1961, ORNL-3166, p 34.

BIBLIOGRAPHY (continued)

Michel, J. W., Design and Analysis of the EGCR Control Rods, ORNL-3453 (to be published).

Preskitt, C. A., Suggested Operating Program for EGCR Control Rods, Oak Ridge National Laboratory, ORNL-CF-60-8-47. (Aug. 8, 1960).

Staff of the Oak Ridge National Laboratory, GCR Quart. Progr. Rept. Sept. 30, 1960, ORNL-3015, p 11.

Staff of the Oak Ridge National Laboratory, GCR Quart. Progr. Rept. June 30, 1960, ORNL-2964, p 35.

DISTRIBUTION

1–2. Central Research Library
3–27. Laboratory Records
28. Laboratory Records, ORNL RC
29. ORNL – Y-12 Technical Library Document Reference Section
30. ORNL Patent Office
31. G. M. Adamson
32. M. Bender
33. F. L. Carlsen
34. J. H. Coobs
35. W. B. Cottrell
36. J. H. DeVan
37. D. A. Douglas, Jr.
38. R. M. Evans
39. J. H Frye, Jr.
40. A. Goldman
41. B. L. Greenstreet
42. W. R. Grimes
43. W. O. Harms
44–48. M. R. Hill
49. H. W. Hoffman
50. E. L. Long, Jr.
51. H. G. MacPherson
52–92. W. D. Manly
93. R. W. McClung
94. C. J. McHargue
95. J. W. Michel
96. E. C. Miller
97. F. R. McQuilkin
98. H. J. Metz
99. F. H. Neill
100. P. Patriarca
101. A. M. Perry
102. C. A. Preskitt
103. J. N. Robinson
104. M. W. Rosenthal
105. G. Samuels
106. H. W. Savage
107. J. L. Scott
108. O. Sisman
109. G. M. Slaughter
110. E. Storto
111. J. A. Swartout
112–121. G. M. Tolson
122. D. B. Trauger
123. C. S. Walker
124. G. M. Watson
125. A. M. Weinberg
126. J. R. Weir
127. G. D. Whitman
128. N. A. Brown, TVA
129–134. W. R. Cooper, TVA
135–140. D. F. Cope, AEC-ORO
141–146. L. H. Jackson, AEC-ORO
147–149. W. F. Banks, Allis-Chalmers
150–152. P. D. Bush, Kaiser Engineers
153–167. Division of Technical Information Extension (DTIE)
168. R. A. Charpie, UCC Res. Adm., New York