ORNL
MASTER COPY

22

OAK RIDGE NATIONAL LABORATORY
operated by
UNION CARBIDE CORPORATION
for the
U. S. ATOMIC ENERGY COMMISSION

ORNL-TM-513

ISOTOPES DEVELOPMENT CENTER

PROGRESS REPORT

RADIOACTIVE SOURCE DEVELOPMENT

OCTOBER 1962 - JANUARY 1963

NOTICE

This document contains information of a preliminary nature and was prepared primarily for internal use at the Oak Ridge National Laboratory. It is subject to revision or correction and therefore does not represent a final report. The information is not to be abstracted, reprinted or otherwise given public dissemination without the approval of the ORNL patent branch, Legal and Information Control Department.

LEGAL NOTICE

This report was prepared as an account of Government sponsored work. Neither the United States, nor the Commission, nor any person acting on behalf of the Commission:

A. Makes any warranty or representation, expressed or implied, with respect to the accuracy, completeness, or usefulness of the information contained in this report, or that the use of any information, apparatus, method, or process disclosed in this report may not infringe privately owned rights; or

B. Assumes any liabilities with respect to the use of, or for damages resulting from the use of any information, apparatus, method, or process disclosed in this report.

As used in the above, "person acting on behalf of the Commission" includes any employee or contractor of the Commission, or employee of such contractor, to the extent that such employee or contractor of the Commission, or employee of such contractor prepares, disseminates, or provides access to, any information pursuant to his employment or contract with the Commission, or his employment with such contractor.

ORNL-TM-513

ISOTOPES DEVELOPMENT CENTER

PROGRESS REPORT

RADIOACTIVE SOURCE DEVELOPMENT

October 1962 - January 1963

Compiled by:

E. E. Beauchamp

Contributions by:

S. T. Ewing
J. A. Jones
R. E. Lewis
C. L. Ottinger
H. T. Russell

Date Issued

APR 15 1963

OAK RIDGE NATIONAL LABORATORY
Oak Ridge, Tennessee
operated by
UNION CARBIDE CORPORATION
for the
U. S. ATOMIC ENERGY COMMISSION

TABLE OF CONTENTS

1. Cesium-137 Glass Development 1

2. Strontium-90 Titanate Sources 4

3. Iodine-125 X-Ray Source Development 4

4. Promethium-147 Heat Source Development 6

5. Radioisotope Targets and Related Sources 8

1. CESIUM-137 GLASS DEVELOPMENT

The major problems encountered in the fabrication of Cs^{137} glass are:

1. Equipment must be adapted to remote operations at the Fission Products Development Laboratory.

2. The melting furnace must be capable of attaining 1250°C and be capable of producing at least 15 batches of glass slabs.

3. A scrubbing system must be capable of retaining the volatilized cesium during the melting operations.

The following equipment was fabricated and installed in a manipulator cell in FPDL for Cs^{137} glass processing:

1. Glass melting boxes, each holding three glass slabs, are fabricated of graphite. A furnace loading consists of three boxes.

2. Loading trays, fabricated of 1/16-in.-thick nickel, will hold the melting boxes in place.

3. Furnace frame, fabricated of 1/8-in.-thick nickel, will hold the three trays and melting boxes in the furnace.

4. Removable frame, fabricated of 1/16-in.-thick stainless steel, will be used to assist in the remote operations of sliding the loaded trays into and out of the furnace.

5. Funnel, fabricated of stainless steel, will be used to facilitate pouring of glass powder into the molds.

6. Miscellaneous items, such as hooks and tongs, will accomodate the remote operations using manipulators.

An experimental run, using finely ground glass containing stable cesium, was made in laboratory test equipment to test the melting procedure and handling techniques required to produce glass slabs with certain close dimensional tolerances required by a customer. The weight and dimensions of the resulting glass slabs are given in Table 1.1. The variation in the thickness of these slabs exceeded the allowable dimensional tolerance.

Table 1.1. Measurements of Glass Slabs Containing Stable Cesium

Slab	Weight (g)	Length (in.)	Width (in.)		Thickness (in.)	
			Max	Min	Max	Min
1	165.1	9.957	1.252	1.240	0.328	0.243
2	161.7	9.955	1.261	1.247	0.326	0.246
3	162.5	9.958	1.260	1.247	0.315	0.234

The procedure for making the cesium glass raw material, cesium tetraoxalate, was tested in the installed FPDL equipment by using both stable and radioactive cesium.

Cesium tetraoxalate[1] was crystallized at 15°C from a chloride solution containing 14 g stable cesium per liter and 1 M oxalic acid with a yield of 78%. After the crystals were calcined at 200°C for 2 hr, the resulting cesium acid oxalate powder contained 65% cesium by weight. The major operational problem was the plugging of the crystallizer discharge line by the crystals.

Three crystallizations of Cs^{137} tetraoxalate were made from Cs^{137} alum slurries; the conditions and results of these runs are listed in Table 1.2.

Table 1.2. Results of Three Cs^{137} Tetraoxalate Runs

Run No.	Cs^+ Conc. (g/liter)	$H_2C_2O_4$ Conc. (M)	Cryst. Temp. (°C)	Curies Cs^{137} in Feed	Curies Cs^{137} To Recycle	Yield (%)
1-Cs14	15.0	1.0	15	22,300	7,700	65
2-Cs14	11.5	1.1	16	31,000	13,100	58
3-Cs14	13.0	1.1	16	17,600	7,400	58

The crystals prepared during these runs were calcined at 200°C for 2 hr and yielded products with ~79% cesium content (26 curies/g).

[1] Isotopes Division Research and Development Report, April 1962, ORNL-TM-401.

Two tests of the glass preparation procedure using stable materials were run to test the equipment and procedures and to determine the volatilization of cesium during the melting under actual process conditions. Laboratory data had indicated that cesium volatilization of up to 50 g per run might be encountered.

The furnace charge material was prepared by blending Li_2CO_3, CdO, $CsHC_2O_4$, and SiO_2 to give the following glass formulations:

Run No.	Expected Glass Formulation After Melting
1-CT	$0.15Li_2O \cdot 0.30CdO \cdot 0.55Cs_2O \cdot 2.7SiO_2$
2-CT	$0.15Li_2O \cdot 0.25CdO \cdot 0.60Cs_2O \cdot 2.5SiO_2$

The glass slabs were melted in graphite molds supported on nickel trays which were placed on the nickel shelves in the furnace. The first run was heated to a maximum temperature of 1250°C. A furnace element failed during the second run, and the run was terminated after the temperature had reached 1140°C.

Gas samples were taken from the furnace off-gas stream at 1-hr intervals during the melting operations, and no cesium was detected in the off-gas. At the limit of detection for the analytical method used, these data indicate a maximum cesium evolution of 6.5 mg/hr which is equivalent to 215 mc of Cs^{137} per hour. The glasses were annealed at 500°C for 3 hr.

Six intact bars were recovered from the first run and one bar from the second run. The breakage of the other bars was caused by molten glass penetration into the powdered graphite liners of the molds and the adhesion to the bulk graphite.

The measurements, density, and cesium leach rate in distilled water were determined for each bar. All bars were uniform in thickness within $\pm$ 0.005 in.; the density was 3.2 g/cc; and cesium leach rates were 1.3 mg cm^{-2} day^{-1} and 1.6 mg cm^{-2} day^{-1} for Runs 1-CT and 2-CT, respectively. The calculated density of the bars based on their dimensions averaged 2.5 g/cc. The actual specific power of the encapsulated source will be based on the calculated (or bulk) density of 2.5 g/cc rather than the measured density 3.2 g/cc.

Analysis of the glass for cesium, lithium, and cadmium showed the following formulations:

Run No.	Glass Composition	Percent Cesium
1-CT	$0.22Li_2O \cdot 0.0CdO \cdot 0.78Cs_2O \cdot 3.85SiO_2$	45.4
2-CT	$0.20Li_2O \cdot 0.0CdO \cdot 0.80Cs_2O \cdot 3.3SiO_2$	49.3

The loss by volatilization of all the cadmium was not expected. Cadmium had been added to the glass to reduce the melting point, to enhance the annealing properties of the glass, and to lower the cesium leach rate. Since the

melting cycle used in the FPDL runs was essentially the same as that used during developmental runs, the reason for the cadmium loss has not yet been established. The effect of this loss on the final characteristics of the glass is being investigated.

One hot glass preparation run was made using Cs^{137} product prepared during Run 1-Cs14. A three-bar mix was made with a composition chosen to yield glass of 50% cesium. All three bars stuck to the graphite molds and were broken. Calorimetric analysis of the broken glass showed a cesium content of 51%. No Cs^{137} activity was detected in the off-gas stream.

2. STRONTIUM-90 TITANATE SOURCES

Three $Sr^{90}TiO_3$ sources were fabricated, each containing a 200-curie sintered pellet of $Sr^{90}TiO_3$ which was ~25 mm in diameter and 3 mm thick. The capsules for these sources were made of 0.002-in.-thick stainless steel foil, and support rings provided additional material for the weld seal. Leak tests using hot ethylene glycol under 20 in. Hg vacuum revealed leaks in the area of the weld and in the window of two sources. A capsule is being designed which will allow the 0.002-in.-thick windows to be leak tested prior to final assembly and will allow the remote welding to be performed on a section which is at least 1/16 in. thick. This concept is shown in Fig. 2.1.

3. IODINE-125 X-RAY SOURCE DEVELOPMENT

A 2-curie I^{125} x-ray source was made for industrial and medical research by evaporating NaI^{125} to dryness in an aluminum cup 0.090 in. ID by 0.070 in. deep. The cup was inserted in an aluminum capsule, 0.375 in. long by 0.140 in. in diameter with a 10-mil-thick aluminum window, which was sealed by welding. The volume of the cavity inside the cup was ~0.11 cm^3. The radiation reading from this source was 110 r/hr at 3 in. as measured with a thin shell cutie pie.

The welded capsule was then sealed in a modified Model-106-type source holder provided by General Motors Corporation, Research Laboratories, made of Type 1100 aluminum (0.146 in. ID by 0.480 in. long). The wall thickness on sides and window was 0.020 in. The source holder was sealed by a threaded brass plug seating on an aluminum shoulder and a stainless steel cap which screwed in place over the brass screw. Smear tests made on the assembled source holder revealed no contamination. The I^{125} source in the GMR Model 106 holder read 50 r/hr at 3 in.

The holder was then placed in a GMR Model 110 Radiographic Exposure Device which was approved by the Bureau of Explosives as a shipping container and by the AEC for use as the exposure device and for storage of the source. The ~5-mil-thick stainless steel window in the Model 110 Radiographic Exposure Device reduced the radiation reading to 4 r/hr at 5 in. as measured with a thin shell cutie pie.

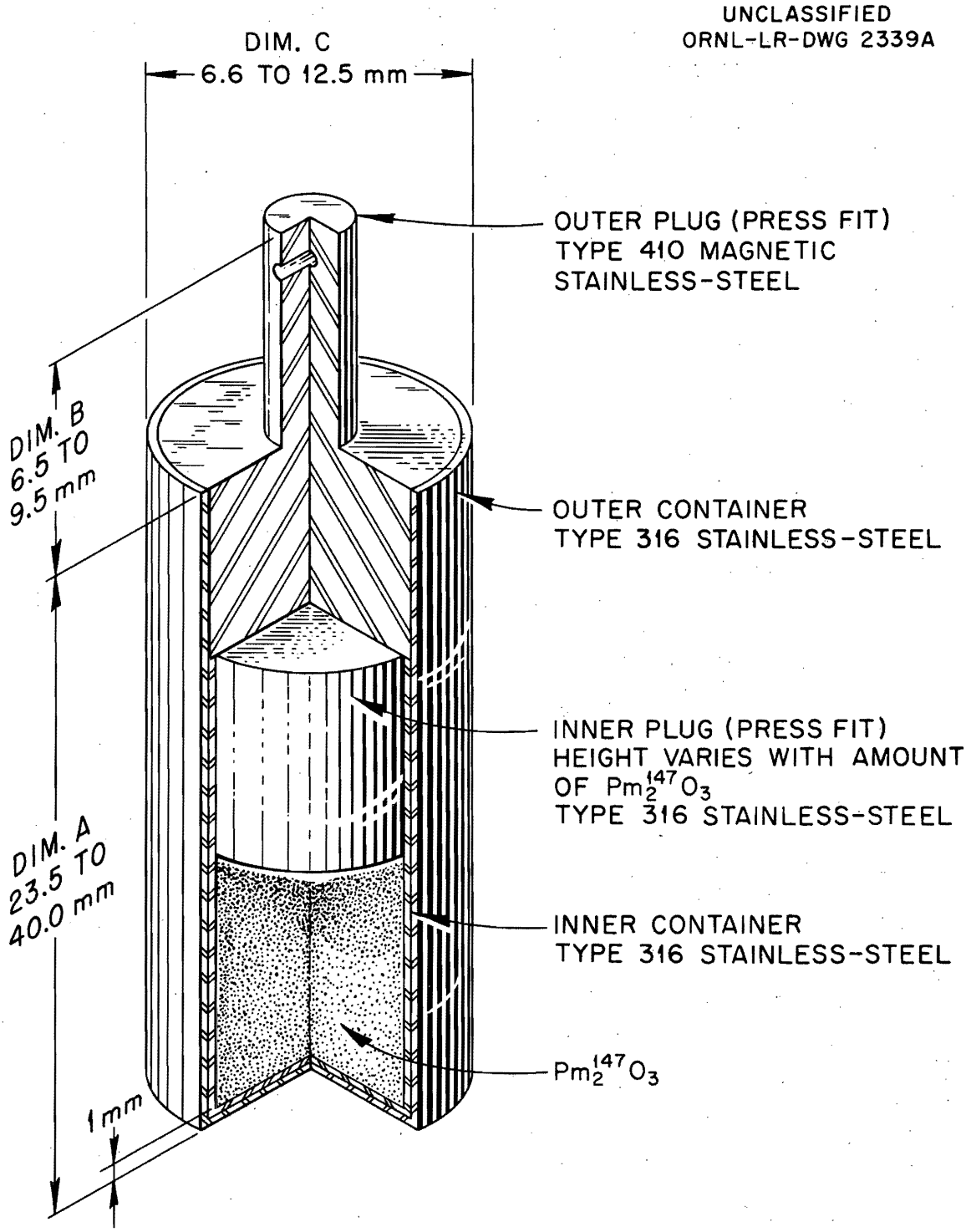

Figure 2.1. Radioactive Source Capsule

With the cooperation of the ORNL Health Division, radiographs were made of human hands to demonstrate the effectiveness of the source. DuPont Royal Blue and Polaroid 3000X film used with a 3-min exposure time at a distance of 13 in. showed very good contrast between flesh, bone, and gristle.

A source containing a larger amount of I^{125} activity such as 20 curies could be used to produce the same radiograph at the same geometry in ~18 sec. Using the same type film and geometry, a source containing from 200 to 300 curies of I^{125} would be required to reduce the exposure time to 1 sec. A 10-curie I^{125} x-ray source is scheduled for fabrication. A simpler, more effective technique of source production than evaporation of the compound will be investigated.

4. PROMETHIUM-147 HEAT SOURCE DEVELOPMENT

A source of ~2650 curies of Pm^{147} was fabricated for testing as a prototype heat source. The source consisted of two pressed $Pm_2^{147}O_3$ cylindrical pellets placed end to end in a modified Size III radiography source capsule as shown in Fig. 4.1. Data on the source are as follows:

Pellet diameter	1 cm
Length of two pellets	1.6 cm
Weight of $Pm_2^{147}O_3$ powder	4.154 g
Alpha	None
Gamma	None
Concentration	640 curies Pm^{147} per gram of oxide
Density of pellets	~3 g/cm^3
Curies	~2650
Inner capsule dimensions	OD, 0.440 in.; length, 0.886 in.; wall thickness, 0.020 in.; window thickness, 0.020 in.
Outer capsule dimensions	OD, 0.490 in.; length, 1.250 in.; wall thickness, 0.020 in.; window thickness, 0.010 in.

The capsules were made of 316 E.L.C. stainless steel and were sealed by fusion welding. A leak test performed by immersing the source in a beaker of boiling water and observing for air bubbles revealed no leaks. The completed source was decontaminated to a level of < 500 dis/min. Measurements of the heat evolution rate and the bremsstrahlung spectrum of the source will be made.

UNCLASSIFIED
ORNL-LR-DWG. 78725

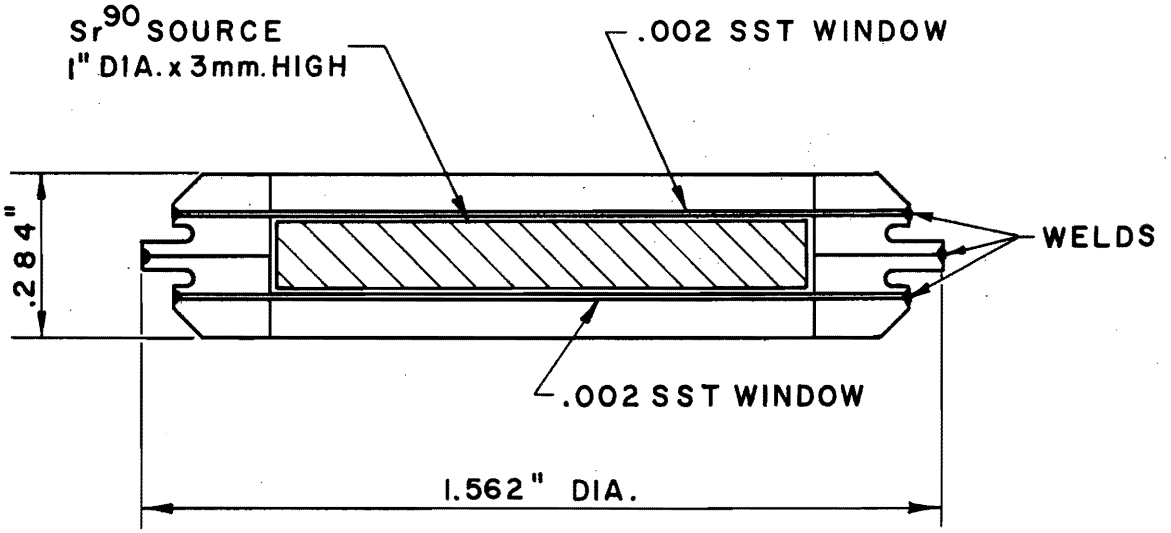

Figure 4.1. Assembly of Sr^{90} Source and Capsule

5. RADIOISOTOPE TARGETS AND RELATED SOURCES

In the research studies of nuclear reactions and particle scattering, emphasis has been placed on interactions with stable isotope nuclei, primarily because of their abundance, availability, and the ease with which they may be converted into target form as compared with radioisotopes. The development of the evaporation-condensation technique, however, has made possible the fabrication of radioisotope targets and sources in the form of thin films. The thin, evaporated films are very "flat"--that is, the surface roughness is usually < 1 μin. In addition, the thickness of such films varies only an insignificant amount over a small geometric area such as 1 sq in.

Radioisotope targets and sources that contain microgram quantities of the radioactive material distributed uniformly without discontinuities have been produced by the evaporation-condensation method. Using films of $U^{235}F_4$, $U^{238}F_4$, $Pu^{239}F_3$, $Pu^{241}F_3$, and $Ra^{226}Br_2$, researchers are now able to study the kinetics of the fission process, subsequent fission-fragment formation, and angular distributions with minimal internal attenuation or secondary scattering of the bombarding particle and/or the resultant fragments.

Radioactive sources of low activity, being prepared by the film technique, yield sharp energy distributions which are possible because of the very low internal attenuation. These sources are also being used for instrument calibration and as energy standards for attenuation studies of emitted particles.

Other progress reports issued by Isotopes Development Center are:

Curium Program	-	Monthly
Safety Testing Program	-	Bi-monthly (odd)
Fission Products	-	Bi-monthly (even)
Reactor- and Cyclotron-Produced Isotopes	-	Bi-monthly (odd)
Radioisotope Applications	-	Quarterly
Target Development	-	Quarterly
Isotopic Separations	-	Quarterly

DISTRIBUTION

1. P. S. Baker
2. E. E. Beauchamp
3. G. E. Boyd
4. S. L. Brooks
5. T. A. Butler
6. F. N. Case
7. F. L. Culler
8. J. H. Gillette
9. H. R. Gwinn
10. C. P. Keim
11. M. T. Kelley
12. E. H. Kobisk
13. E. Lamb
14. L. O. Love
15. M. E. Ramsey
16. R. A. Robinson
17. A. F. Rupp
18. H. E. Seagren
19. M. J. Skinner
20. J. A. Swartout
21. A. M. Weinberg
22. Laboratory Records - RC

23-24. Central Research Library
25-27. Laboratory Records
28. Document Reference Section

EXTERNAL DISTRIBUTION

29. P. C. Aebersold, Div. of Isotopes Development, AEC, Washington, D. C.
30. Argonne National Laboratory, Iemont, Illinois
31. A. Berman, Div. of Isotopes Development, AEC, Washington, D. C.
32. O. M. Bizzell, Div. of Isotopes Development, AEC, Washington, D. C.
33. H. D. Bruner, Div. of Biology and Medicine, AEC, Washington, D. C.
34. J. T. Cristy, AEC-RLOO, Richland, Washington
35. D. C. Davis, Research and Development Div., AEC-ORO, Oak Ridge, Tenn.

36-38. E. E. Fowler, Div. of Isotopes Development, AEC, Washington, D. C.

39. J. W. Hitch, Div. of Isotopes Development, AEC, Washington, D. C.
40. I. A. Hobbs, AEC-SROO, Aiken, S. C.
41. J. W. Irvine, 6-426, MIT, Cambridge 39, Mass.
42. T. R. Jones, Div. of Research, AEC, Washington, D. C.
43. P. W. McDaniel, Div. of Research, AEC, Washington, D. C.
44. J. E. Machurek, Div. of Isotopes Development, AEC, Washington, D. C.
45. B. Manowitz, Brookhaven National Lab., Upton, L.I., N. Y.
46. R. B. Martin, Research and Development Div., AEC-ORO, Oak Ridge, Tenn.
47. Mound Laboratory, Miamisburg, Ohio
48. F. K. Pittman, Div. of Reactor Development, AEC, Washington, D. C.
49. W. H. Reas, General Electric Co., HAPO, Richland, Washington
50. G. M. Rotariu, Div. of Isotopes Development, AEC, Washington, D. C.
51. H. M. Roth, Research and Development Div., AEC-ORO, Oak Ridge, Tenn.
52. L. G. Stang, Hot Lab. Div., Brookhaven National Lab., Upton, L.I., N.Y.
53. V. R. Thayer, Atomic Energy Div., E. I. DuPont, Wilmington, Del.
54. Library, Brookhaven National Lab., Upton, L.I., N. Y.
55. Library, Savannah River Laboratory, Aiken, S. C.
56. Library, Hanford Atomic Products Operation, Richland, Washington

57-71. DTIE, AEC