OAK RIDGE NATIONAL LABORATORY

operated by

UNION CARBIDE CORPORATION

for the

U.S. ATOMIC ENERGY COMMISSION

OAK RIDGE NATIONAL LABORATORY LIBRARIES

3 4456 0549436 4

ORNL-TM-518

29

ISOTOPES DEVELOPMENT CENTER

PROGRESS REPORT

RADIOISOTOPE APPLICATIONS

OCTOBER - DECEMBER 1962

CENTRAL RESEARCH LIBRARY
DOCUMENT COLLECTION
LIBRARY LOAN COPY
DO NOT TRANSFER TO ANOTHER PERSON
If you wish someone else to see this document, send in name with document and the library will arrange a loan.

NOTICE

[redacted]

LEGAL NOTICE

This report was prepared as an account of Government sponsored work. Neither the United States, nor the Commission, nor any person acting on behalf of the Commission:

A. Makes any warranty or representation, expressed or implied, with respect to the accuracy, completeness, or usefulness of the information contained in this report, or that the use of any information, apparatus, method, or process disclosed in this report may not infringe privately owned rights; or

B. Assumes any liabilities with respect to the use of, or for damages resulting from the use of any information, apparatus, method, or process disclosed in this report.

As used in the above, "person acting on behalf of the Commission" includes any employee or contractor of the Commission, or employee of such contractor, to the extent that such employee or contractor of the Commission, or employee of such contractor prepares, disseminates, or provides access to, any information pursuant to his employment or contract with the Commission, or his employment with such contractor.

ORNL-TM-518

ISOTOPES DEVELOPMENT CENTER

PROGRESS REPORT

RADIOISOTOPE APPLICATIONS

October - December 1962

Compiled by:

H. A. O'Brien, Jr.

Contributions by:

W. D. Box
R. G. Niemeyer
R. S. Pressly

Date Issued

MAY 16 1963

OAK RIDGE NATIONAL LABORATORY
Oak Ridge, Tennessee
operated by
UNION CARBIDE CORPORATION
for the
U. S. ATOMIC ENERGY COMMISSION

OAK RIDGE NATIONAL LABORATORY LIBRARIES

3 4456 0549436 4

TABLE OF CONTENTS

1. Aircraft Flight Recorder Location by Radiation Techniques 1

Radioactive Locator Beacon 1

Shield Design No. 1 1

Shield Design No. 2 3

Radiation Detector and Signal Generating Device 3

Conclusions 3

2. Iodine-125 X-Ray Source 6

1. AIRCRAFT FLIGHT RECORDER LOCATION BY RADIATION TECHNIQUES

Radioactive Locator Beacon

The development of a radioactive locator beacon[1,2] for utilization in the recovery of aircraft flight recorders is continuing. The radioactive locator beacon must emit penetrating gamma radiation to meet the specified ranges of detection through water and mud. Cobalt-60 as cobalt metal was selected as the radioactive source because it provides the required gamma radiation (e.g., the radiation will penetrate 2 ft of mud, 3 ft of water, and 10 ft of air), has a half-life of 5.3 yr, and has an extended record of safe use in many radiation devices.

The use of the smallest detectable source is desirable in order to minimize the shielding requirements and to reduce the radiation hazards involved in the recovery operation. Eight millicuries of Co^{60} will be adequate to meet the detection requirements of the Federal Aviation Agency. The dose rate 1 ft from the exposed source in air would be ~125 mr/hr and at 10 ft, ~1.2 mr/hr. Thus, little difficulty would be encountered in handling this size source, and there would not be a significant hazard to crash survivors or rescue personnel.

The three currently employed types of flight recorders have insufficient space available inside the case for a shielded radioactive source. The conceptual design for the beacon is based on a Co^{60} source mounted external to the flight-recorder tape deck within a high density shield from which the source will be ejected on impact. Both uranium metal and tungsten-nickel alloy are excellent shielding materials. Uranium is the better shielding material but must be encased in stainless steel cladding for alpha containment and fire resistance. Total weight of the proposed locator beacon will be ~25 lb.

Shield Design No. 1

An 8-mc Co^{60} source, enclosed in a stainless steel capsule, is mounted at the center of a 4-in. spherical shield. The sphere is designed so that it will separate into two sections upon impact. The larger section will fall away and expose the source; the smaller section, to which the source is attached, is firmly attached to the flight recorder by means of a mounting bracket (Fig. 1.1).

In the event of an airplane crash, the entire assembly will continue moving forward because of its inertia. The radioactive source shield,

---

[1]R. G. Niemeyer, Aircraft Flight Recorder Location by Radiation Techniques, ORNL-TM-510 (to be published).

[2]H. A. O'Brien, Jr., Radioisotope Applications, July-September 1962, ORNL-TM-437.

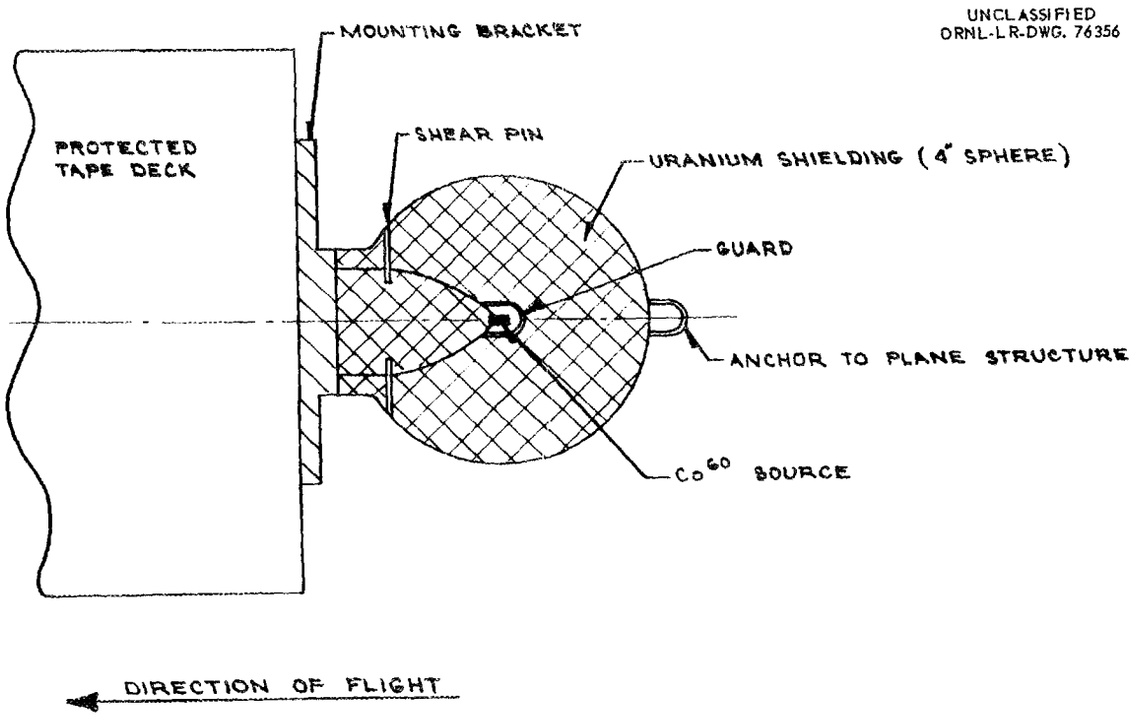

Fig. 1.1. Radioactive Locator Beacon

being firmly anchored to the fuselage, will be held back, the shear pins will break, and the source will be exposed.

Shield Design No. 2

In the alternative method, the shield is composed of three segments held together by trigger-activated pins (Fig. 1.2). Upon impact, the trigger device (Fig. 1.3) would pull the pins out of the slots so that all three pieces of the shielding would fall away and the source attached to the instrument by a chain or a braided steel cable would be entirely exposed.

The pin locking the segments of the shield together is held in a cocked position behind a sear. Upon impact, the plunger will be forced past the sear allowing the spring to complete the motion of withdrawing the locking pin from the shield. The spring could be replaced by an explosive cartridge designed to detonate at a predetermined impact force.

Radiation Detector and Signal Generating Device

Another method of locating flight recorders involves a radiation detector such as the audible personal radiation monitor (PRM) type device developed by Oak Ridge National Laboratory which would be fastened to the flight recorder tape deck along with sonar and possibly audio signal generating equipment. In this case the flight recorder would be located by probing with a partially shielded Co^{60} source. When the source is brought near enough, the PRM-type detector would electronically activate the sonar and audio equipment. If the tape deck were on land it would be located by the audible alarm and if in water or mud, by a sonar detector.

The use of this type of system has many drawbacks which might be difficult to overcome. One of the FAA requirements is that "every consideration should be given to long life, low weight, small size, and crash survivability." Considerable development work and testing would be required to establish the best packaging methods and to ascertain the reliability of such a system.

With the assumption that a dose rate of 0.2 mr/hr would be a practical value for activating the PRM-type locator through the specified shielding materials, a Co^{60} source of about 30 mc would be required. The use of a partially shielded source of this size introduces significant radiation hazards, and the required shielding would not be easily portable.

Conclusions

The most reliable method for locating flight recorders appears to be by means of a radioactive locator beacon. Such beacons when utilizing a Co^{60} source have essentially 100% reliability, for they do not rely on fragile electronic equipment or batteries but obtain their energy from spontaneous radioactive decay. This type beacon easily meets the FAA

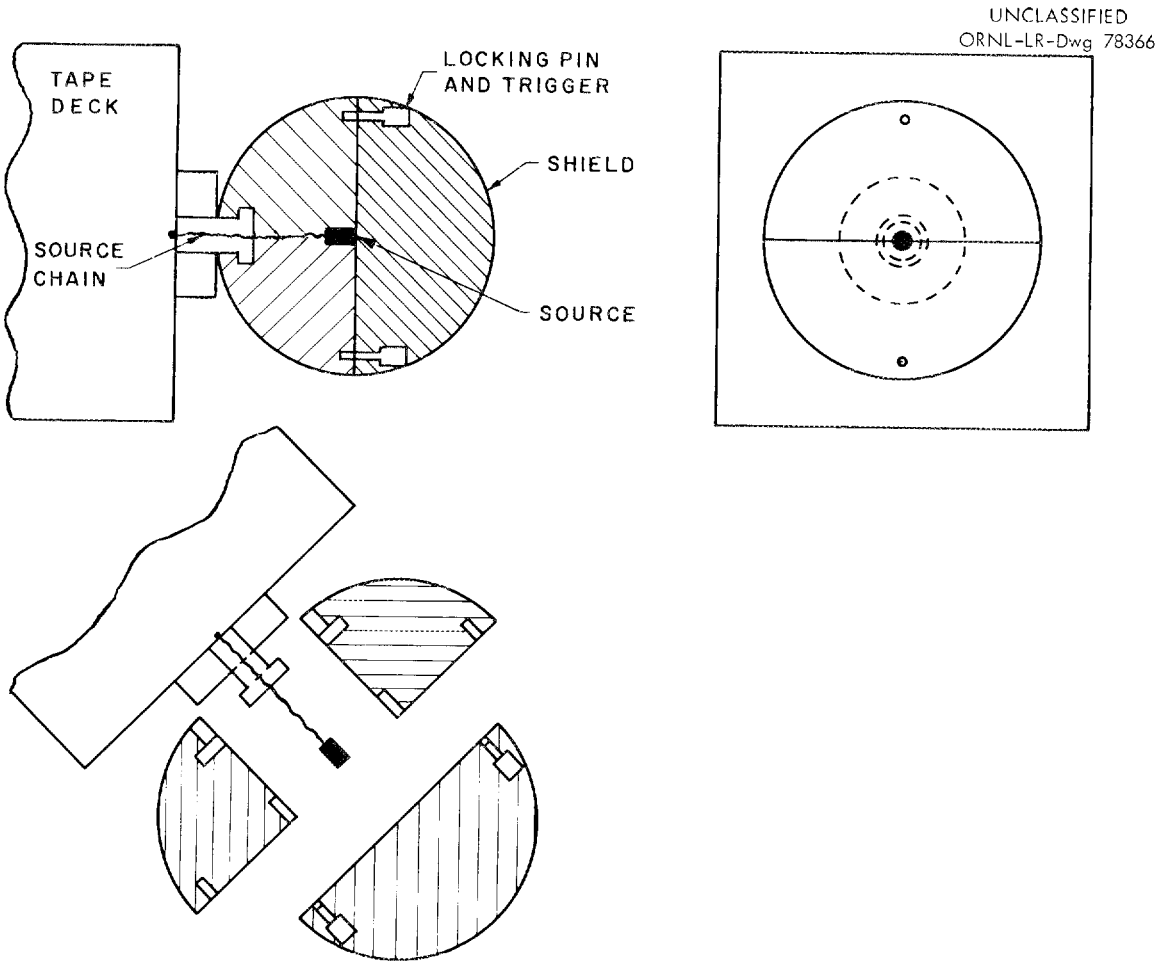

Fig. 1.2. Flight Recorder Locator Beacon

UNCLASSIFIED
ORNL-LR-Dwg 78367

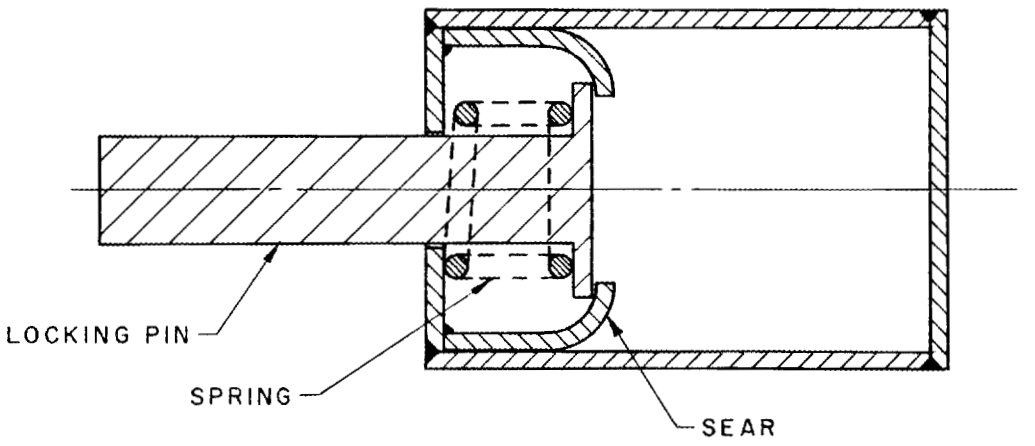

Fig. 1.3. Locking Pin and Trigger Mechanism

requirements of a shelf-life of 6 months followed by an operating life of 14 days. Environmental temperatures ranging from -62°C to +1100°C would have no effect on its operation. The isotope beacon can readily withstand the FAA requirement of altitude, vibration, impact shock, and total immersion in sea water. The beacon is very rugged, easy to fabricate, and requires virtually no maintenance or testing. The recovery operation will require a portable scintillometer, such as a model 389H Super Scintillac made by Victoreen Instrument Company.

It is recommended that radiation measurements in mud, water, and air should be repeated using an 8-mc Co^{60} source and a scintillometer to confirm the optimim size source and to develop recovery procedure with a scintillation type instrument. A protected tape deck should be irradiated under the most severe conditions which might occur in actual use and should be tested to determine if the radiation has any detrimental effect on the magnetic tape or the thermal insulation. Detailed design and development work on the trigger mechanism should be undertaken to insure satisfactory operation of the locator beacon. A prototype beacon should be fabricated and tested to ascertain that all required conditions for usage are met, including activation of the beacon on impact, crash survivability, and recovery.

2. IODINE-125 X-RAY SOURCE

Iodine-125 decays with a 60-day half-life by electron capture to the 0.0354-Mev excited state of Te^{125}. The Te^{125} decays by emission of a gamma ray which is largely converted in the K shell and results in emission of the 0.0273-Mev K_α x ray. Thus, the net result of the decay of I^{125} by these modes is the production of two coincident photons which have energies of 27.3 to 35.4 kev. These decay characteristics make I^{125} ideally suited for a portable x-ray source, if a "point" source of relatively low self-absorption can be prepared.

A source was prepared from a solution of ~3.0 mg NaOH and 2.0 curies I^{125} which was reduced in volume to ~1 drop. This was transferred to a 2-mm-diam by 3-mm-deep hole in the source container, which measured 2.5 mm in diameter by 9 mm long. The solution in the source container was slowly evaporated to dryness, followed by a double encapsulation prior to placement of the source in the radiographic camera. Tests showed that 95% (1.96 curies) of the original I^{125} was successfully transferred.

A cooperative testing program is planned for determining useful applications of the source. Participating in this program will be: General Motors Research Laboratories; Dr. W. G. Myers, Ohio State University; Dr. K. L. Krabbenkoft, Harper Hospital, Detroit, Michigan; and the Oak Ridge National Laboratory.

Prior to shipment of the source to the General Motors Laboratory, several radiographs were made of the human hand at distances of 6 and 12 in. with 30-sec to 3-min exposures. Figure 2.1 is a 2-min exposure at 12 in. using Kodak "Royal Blue" x-ray film with an intensifying screen. Some of the

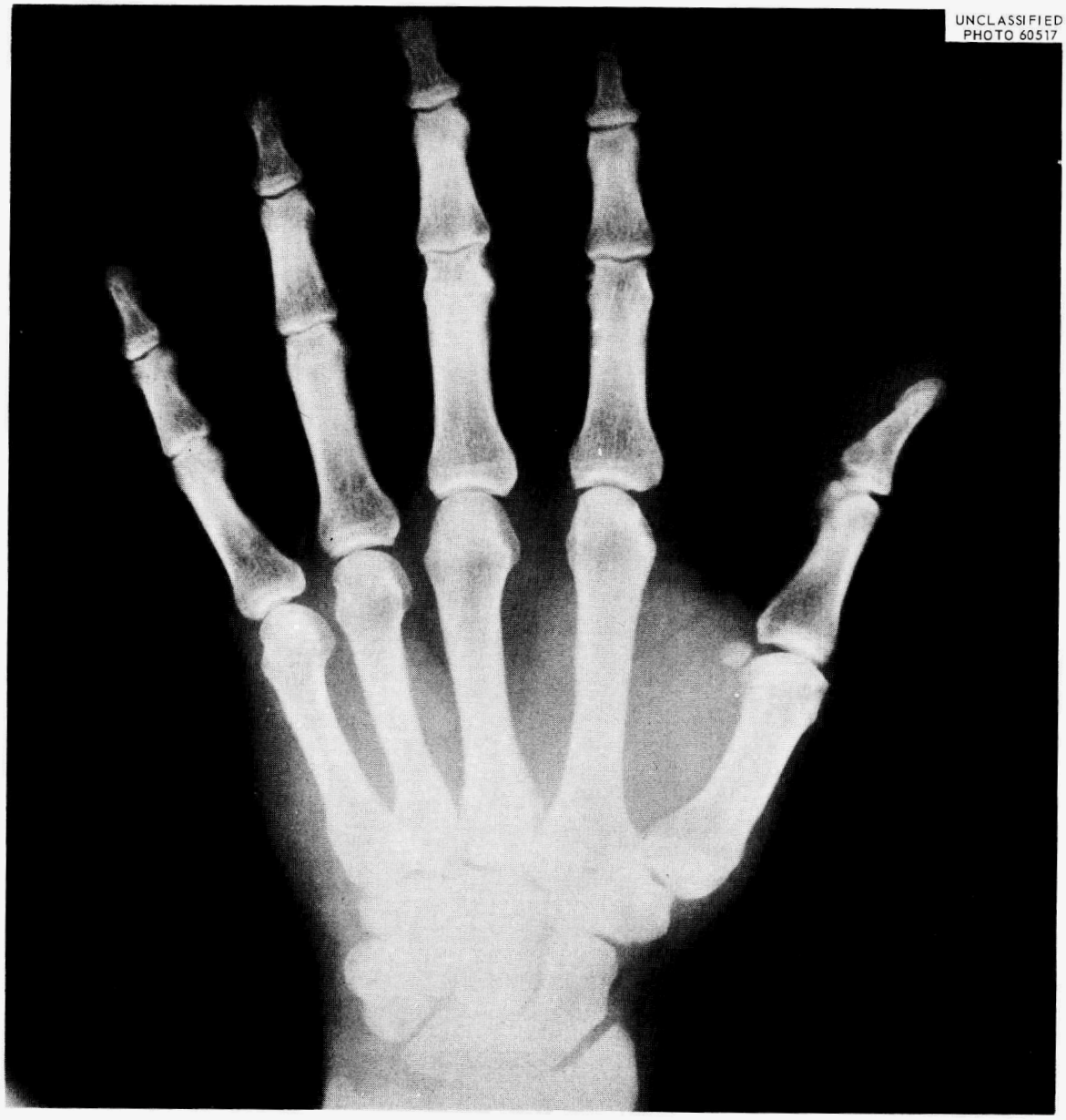

SOURCE: I^{125} (1.96 curies) DISTANCE: 12 in.
TIME: 2 min. FILM: KODAK ROYAL BLUE X-RAY
DOSE: 9.5 mr

Fig. 2.1. Radiograph of Hand

resolution is lost in reproduction, but the original pictures have a resolution comparable to that of normal x-ray machines.

Figure 2.2 is a hand exposure in which two pieces of glass are shown near the outermost joint of the ring finger. Also seen in the picture is a pocket dosimeter. This was a 30-sec exposure at 6 in. using Polaroid Type 3000X film. Another hand exposure, showing in the outermost joint of the ring finger what appears to be a piece of metal, is shown in Figure 2.3. A 3-min exposure at 12 in. on Polaroid 3000X film was used.

These radiographs show that this portable x-ray device can be effectively utilized as a diagnostic aid without the necessity of elaborate equipment. Further testing as outlined above will broaden the scope of usefulness of this source both in medicine and in industry.

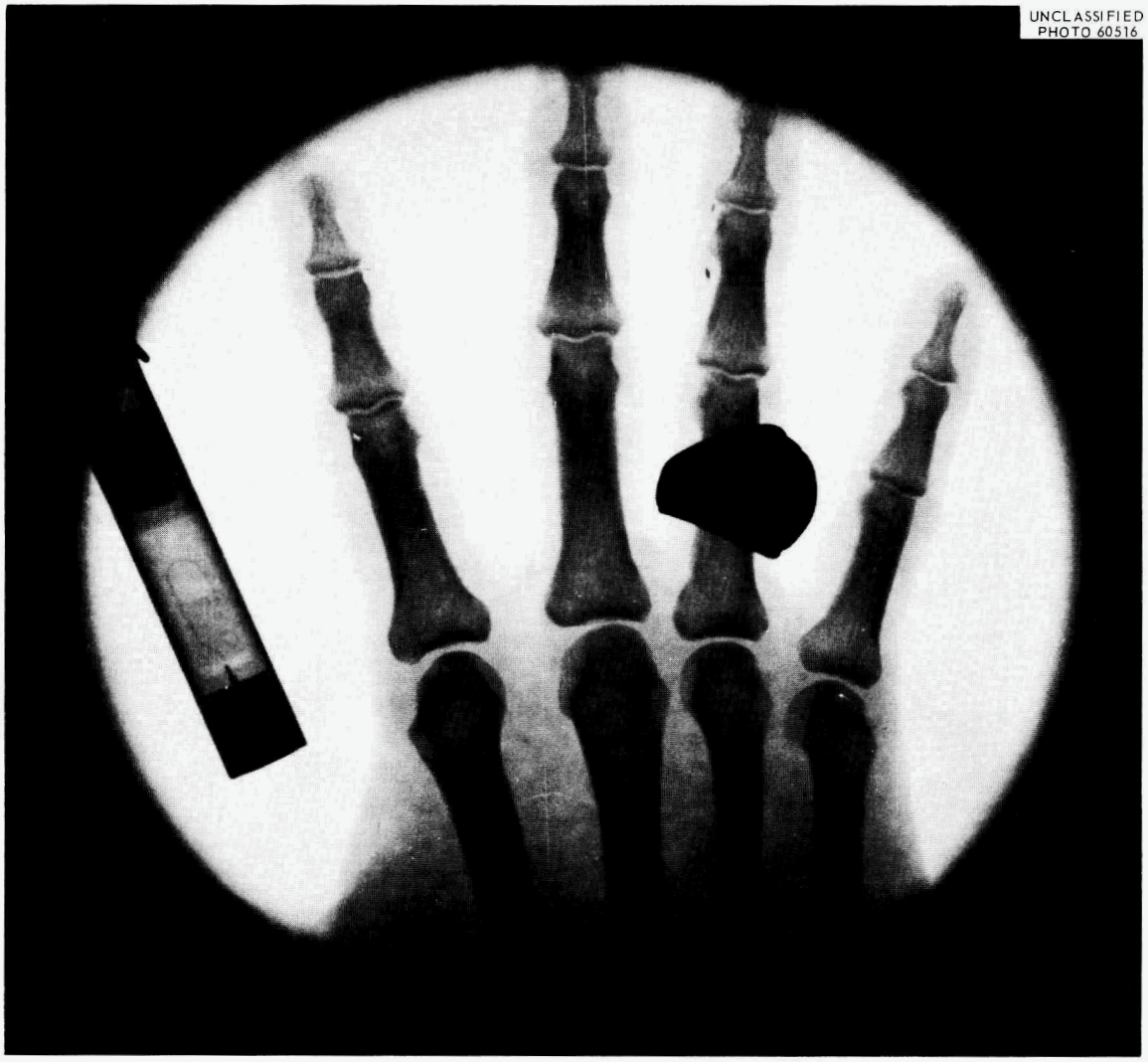

SOURCE : I^{125} (1.96 curies) DISTANCE: 6 in.
TIME: 30 sec FILM : POLAROID TYPE 3000X

Fig. 2.2. Radiograph of Hand

SOURCE: I^{125} (1.96 curies) DISTANCE: 12 in.

TIME: 3 min. FILM: POLAROID TYPE 3000X

Fig. 2.3. Radiograph of Hand

Other progress reports issued by Isotopes Development Center are:

Curium Program - Monthly

Radioactive Source Development - Bi-Monthly (even)

Safety Testing Program - Bi-Monthly (odd)

Fission Products - Bi-Monthly (even)

Reactor- and Cyclotron-Produced Isotopes - Bi-Monthly (odd)

Target Development - Quarterly

Isotopic Separations - Quarterly

DISTRIBUTION

1. P. S. Baker
2. E. E. Beauchamp
3. G. E. Boyd
4. C. J. Borkowski
5. S. L. Brooks
6. T. A. Butler
7. F. N. Case
8. L. T. Corbin
9. J. A. Cox
10. F. L. Culler
11. J. H. Gillette
12. H. R. Gwinn
13. C. P. Keim
14. M. T. Kelley
15. E. H. Kobisk
16. E. Lamb
17. L. O. Love
18. W. S. Lyon
19. H. A. O'Brien
20. M. E. Ramsey
21. R. A. Robinson
22. A. F. Rupp
23. H. E. Seagren
24. M. J. Skinner
25. J. A. Swartout
26. A. M. Weinberg
27. J. C. White
28. Laboratory Records - RC

29-30. Central Research Library

31-33. Laboratory Records

34. Document Reference Section

EXTERNAL DISTRIBUTION

35. P. C. Aebersold, Div. of Isotopes Development, AEC, Washington, D. C.
36. Argonne National Laboratory, Lemont, Illinois
37. A. Berman, Div. of Isotopes Development, AEC, Washington, D. C.
38. O. M. Bizzell, Div. of Isotopes Development, AEC, Washington, D. C.
39. H. D. Bruner, Div. of Biology and Medicine, AEC, Washington, D. C.
40. J. T. Cristy, AEC-RLOO, Richland, Washington
41. D. C. Davis, Research and Development Div., AEC-ORO, Oak Ridge, Tenn.

42-44. E. E. Fowler, Div. of Isotopes Development, AEC, Washington, D. C.

45. I. A. Hobbs, AEC-SROO, Aiken, S. C.
46. J. W. Hitch, Div. of Isotopes Development, AEC, Washington, D. C.
47. J. W. Irvine, 6-426, MIT, Cambridge 39, Mass.
48. T. R. Jones, Div. of Research, AEC, Washington, D. C.
49. J. E. Machurek, Div. of Isotopes Development, AEC, Washington, D. C.
50. P. W. McDaniel, Div. of Research, AEC, Washington, D. C.
51. B. Manowitz, Brookhaven National Lab., Upton, L. I., N. Y.
52. Mound Laboratory, Miamisburg, Ohio
53. R. B. Martin, Research and Development Div., AEC-ORO, Oak Ridge, Tenn.
54. F. K. Pittman, Div. of Reactor Development, AEC, Washington, D. C.
55. W. H. Reas, General Electric Co., HAPO, Richland, Washington
56. G. M. Rotariu, Div. of Isotopes Development, AEC, Washington, D. C.
57. H. M. Roth, Research and Development Div., AEC-ORO, Oak Ridge, Tenn.
58. L. G. Stang, Hot Lab. Div., Brookhaven National Lab., Upton, L. I., N.Y.
59. V. R. Thayer, Atomic Energy Div., E. I. DuPont, Wilmington, Del.
60. Library, Brookhaven National Lab., Upton, L. I., N. Y.
61. Library, Hanford Atomic Products Operation, G. E. Co., Richland, Wash.
62. Library, Savannah River Laboratory, Aiken, S. C.

63-77. DTIE, AEC