OAK RIDGE NATIONAL LABORATORY LIBRARIES
3 4456 0549441 7

11

OAK RIDGE NATIONAL LABORATORY

operated by

UNION CARBIDE CORPORATION

for the

U.S. ATOMIC ENERGY COMMISSION

ORNL-TM-616

COPY NO. - 11

DATE - July 15, 1963

OPERATING PROCEDURE FOR THE BULK SHIELDING REACTOR

FIFTH EDITION

(The Fourth Edition was issued as ORNL-2448)

K. M. Henry, J. D. Kington, and F. C. Maienschein

OAK RIDGE NATIONAL LABORATORY
CENTRAL RESEARCH LIBRARY
CIRCULATION SECTION
4500N ROOM 175
LIBRARY LOAN COPY
DO NOT TRANSFER TO ANOTHER PERSON
If you wish someone else to see this report, send in name with report and the library will arrange a loan.
ORNL-1116 (6-97)

NOTICE

This document contains information of a preliminary nature and was prepared primarily for internal use at the Oak Ridge National Laboratory. It is subject to revision or correction and therefore does not represent a final report. The information is not to be abstracted, reprinted or otherwise given public dissemination without the approval of the ORNL patent branch, Legal and Information Control Department.

LEGAL NOTICE

This report was prepared as an account of Government sponsored work. Neither the United States, nor the Commission, nor any person acting on behalf of the Commission:

A. Makes any warranty or representation, expressed or implied, with respect to the accuracy, completeness, or usefulness of the information contained in this report, or that the use of any information, apparatus, method, or process disclosed in this report may not infringe privately owned rights; or

B. Assumes any liabilities with respect to the use of, or for damages resulting from the use of any information, apparatus, method, or process disclosed in this report.

As used in the above, "person acting on behalf of the Commission" includes any employee or contractor of the Commission, or employee of such contractor, to the extent that such employee or contractor of the Commission, or employee of such contractor prepares, disseminates, or provides access to, any information pursuant to his employment or contract with the Commission, or his employment with such contractor.

TABLE OF CONTENTS

		Page No.
I.	Authorized Personnel for Reactor Operation	1
II.	Standard Operating Procedure for Reactor Operation	2
III.	Standard Operating Procedure for Reactor Loading	2
IV.	Standard Operating Procedure for Moving Reactor Bridge	3
V.	Emergency Operating Procedure	3
App. A	Reactor Supervisors and Operators	5
App. B	Reactor Block Diagrams	6
App. C	Reactor Operation Check List	11
App. D	Location of Scram Buttons	19
App. E	List of Conditions that Might Require an Operator Scram	21
App. F	Control and Safety Chamber Tests	22
App. G	Procedure for Adjusting Magnet Currents	24

OAK RIDGE NATIONAL LABORATORY LIBRARIES

3 4456 0549441 7

During the thirteen-year operation of the Bulk Shielding Reactor (BSR) at the Oak Ridge National Laboratory, the following operating procedures have been developed. This is the fifth revision of the statement of these procedures. It is set forth in this form primarily for the guidance of the reactor operators at the Bulk Shielding Facility (BSF). They should become thoroughly familiar with the information contained herein.

I. Authorized Personnel for Reactor Operation

Appendix A contains the current list of reactor supervisors and operators. This list may be modified as changes in personnel occur. Any new reactor operators will be approved by two of the supervisors. This approval will be noted in writing in the reactor log book.

A reactor supervisor for the BSR has the responsibility for the operation and safety of the Bulk Shielding Reactor. In the event of an emergency connected with the reactor in any way, the reactor supervisor has the responsibility and authority to take the proper remedial action.

Routine operations of the reactor will be performed by one of the operators or supervisors listed in Appendix A. In an emergency the operator is empowered to act as a supervisor, if a supervisor is not readily available. All scheduled nonroutine operations and operations involving changes of the potential excess reactivity of the reactor will require the presence of a reactor supervisor. Nonroutine operations are described in Sections III and IV.

II. Standard Operating Procedure for Reactor Operation

No reactor operations will be carried out under the duress of a time limit.

Startup will be carried out by one of the reactor operators or supervisors. The detailed procedure to be followed is described in Appendix C. An abbreviated check list is written on the reactor console. All items on this list should be checked (at least mentally) during the startup operation. When operation at a steady power level has been achieved, the nominal power level will be announced over the BSF public address (PA) system. The fission chamber monitoring the reactor flux may then be connected with the PA system and the operator may work elsewhere within the Bulk Shielding Facility.

III. Standard Operating Procedure for Reactor Loading

A new loading for the BSR will be undertaken only when a reactor supervisor is present. However, a single opperator may reload a known fuel-element configuration. Chamber tests, Appendix F, will be performed by the supervisor in attendance.

Whenever a new loading is required by an experimental arrangement, the reactor frame (unloaded) will be positioned. Then as fuel elements are added the approach to criticality will be carefully determined by the method of subcritical multiplication. The excess reactivity will be limited to that required by the operating conditions of the experiment and will be less than 2.5% unless specific authorization is requested from the Atomic Energy Commission.

Whenever experimental apparatus is placed against the reactor (and not permanently attached) in such a manner as to significantly reduce the

reactivity, the fuel added to maintain criticality will be unloaded before the reactor is left unattended.

Before the initial installation of experiments, a review will be made by the BSF Experiment Review Committee. This committee is composed of the reactor supervisors. If the review is favorable, at least two members of the above committee shall sign the reactor log book at the description of the experiment. If questions arise which are not resolved by this group, they shall be referred to the Neutron Physics Division Reactor Operations Review Committee.

IV. Standard Operating Procedure for Moving Reactor Bridge

The reactor bridge will be moved to a new location only under the direction of one of the reactor supervisors. It may be repositioned in a previously used configuration by a reactor operator. The key to the reactor bridge will be handled in the same manner as the reactor controls key (see Appendix C). The reactor will be partially unloaded whenever it is moved into a new position which changes the reflector adjacent to the reactor or whenever there is the possibility of interaction with experiments being conducted with the Pool Critical Assembly (PCA). The possibility of such interaction is minimized by permanent mechanical stops which limit the motion of the reactor bridge.

V. Emergency Operating Procedure

Whenever the operator or another person is in doubt about the safety of further reactor operation he should scram the reactor. Unnecessary scrams are not prohibitively expensive for this reactor so personnel should not hesitate to scram the reactor. Scram buttons are located in the positions listed in Appendix D. A list of typical conditions that might require

a scram is given in Appendix E.

After any scram for emergency reasons, the operator should not start up again unless the cause of the conditions leading to the scram are completely understood. This procedure should be followed for either a personnel or an automatic safety device scram.

Emergency Operating Procedures for the Bulk Shielding Facility for emergencies involving high-radiation levels are set forth in the "Emergency Procedure for Building 3010, Bulk Shielding Facility Emergency Area No. 2."

APPENDIX A

Reactor Supervisors and Operators

The following persons are designated as reactor supervisors:

J. D. Kington	Phone 483-0975, Oak Ridge
F. C. Maienschein	Phone 483-3805, Oak Ridge
K. M. Henry (on leave to the TSF)	Phone 483-1544, Oak Ridge

The following persons are designated as reactor operators:

J. M. Miller

E. G. Silver

APPENDIX B

Reactor Block Diagrams

Reference to figures below will provide information as to the design philosophy of the control circuits. They will also provide useful information in the case of operating abnormalities.

Circuit diagrams of individual blocks and interconnection diagrams are maintained in the reactor print file located in the reactor control room.

Figures 1 and 2 are block diagrams for the safety and control circuits excerpted from Fig. 3.

Figures 3 and 4 represent the complete instrument and control systems as block diagrams.

UNCLASSIFIED
2-01-058-0-418

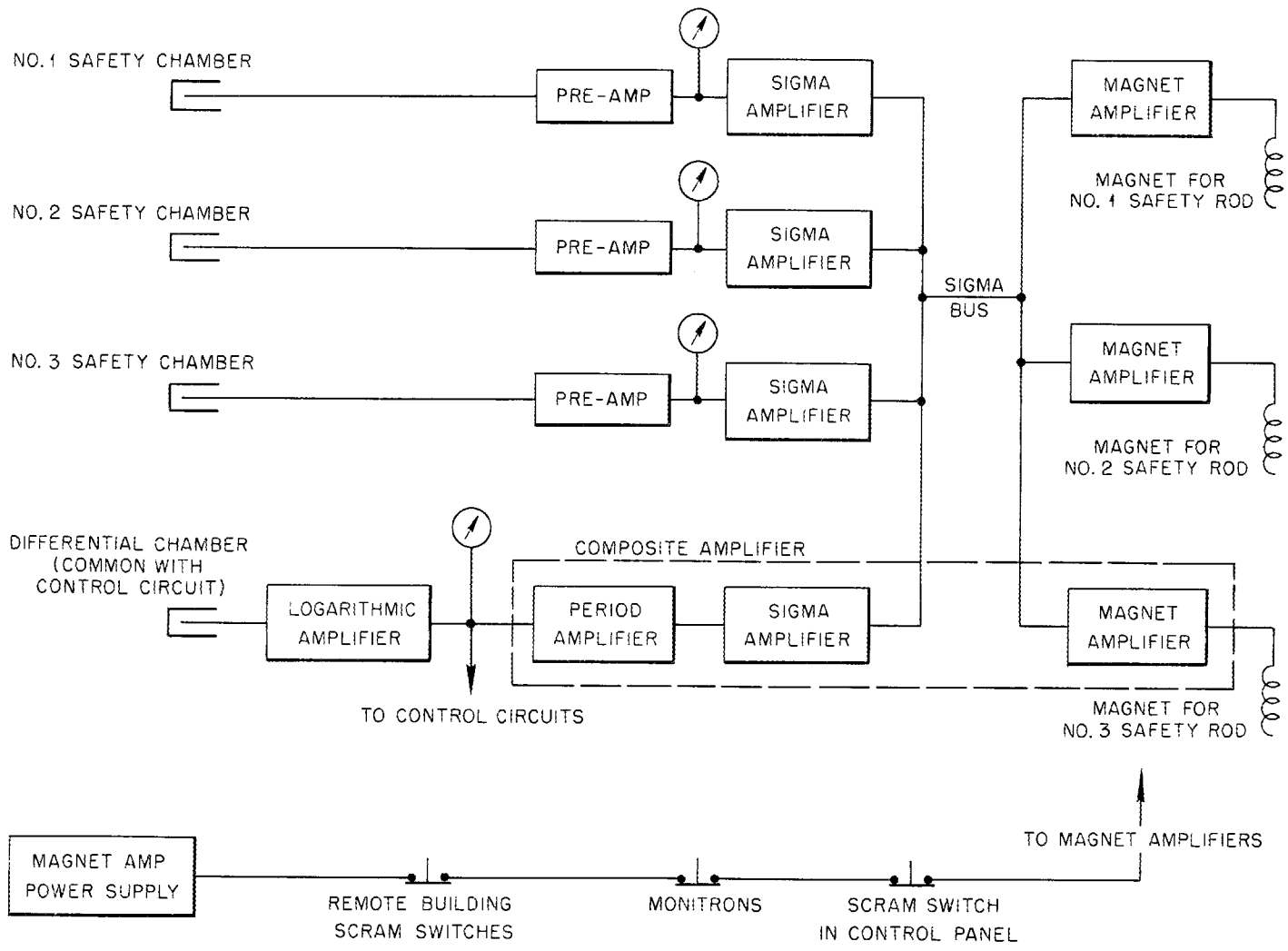

Fig. 1. Block Diagram of Safety Circuits for the Bulk Shielding Reactor.

7-15-63

UNCLASSIFIED
2-01-058-0-419

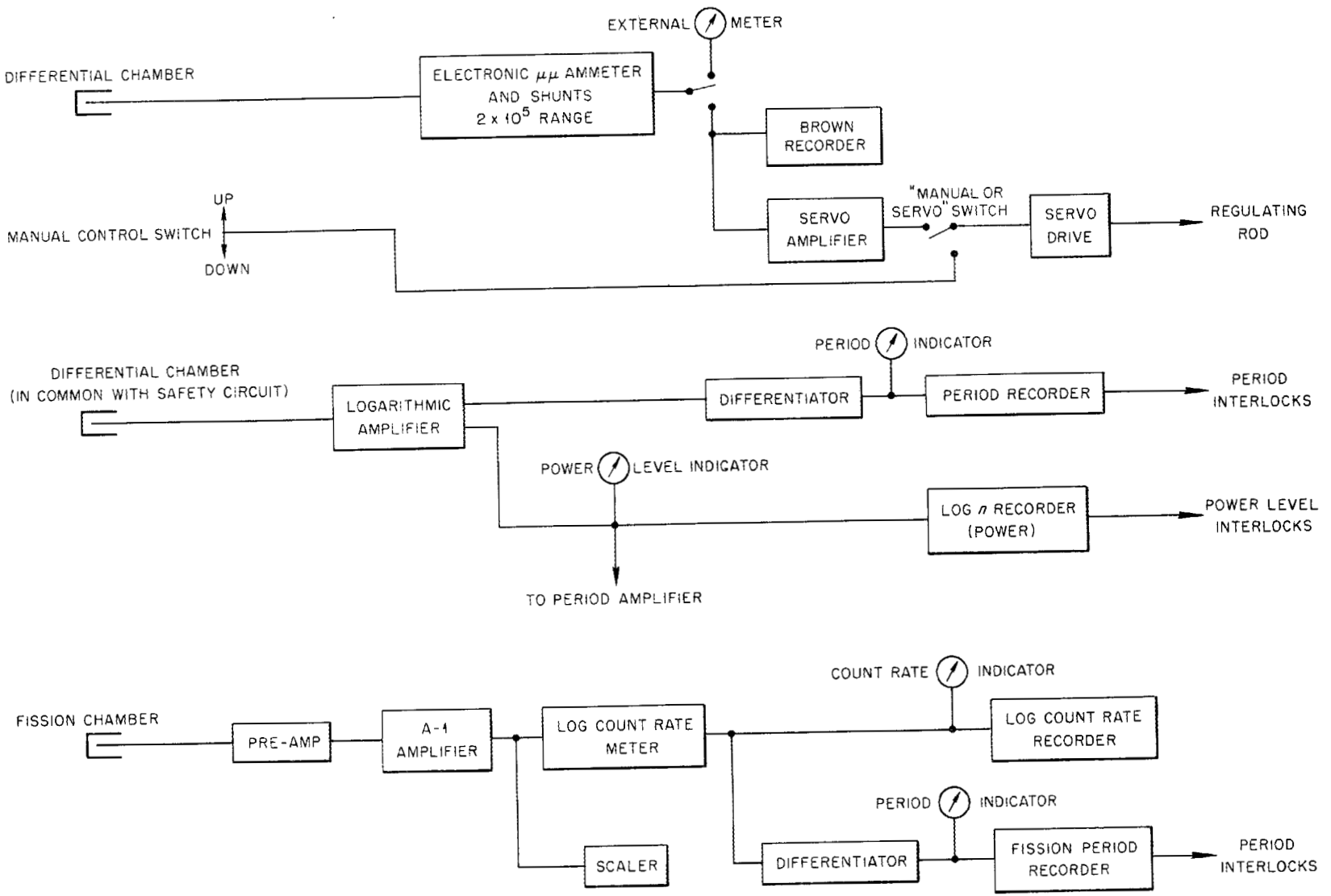

Fig. 2. Block Diagram of Control Circuits for the Bulk Shielding Reactor.

7-15-63

UNCLASSIFIED
2-01-058-0-420

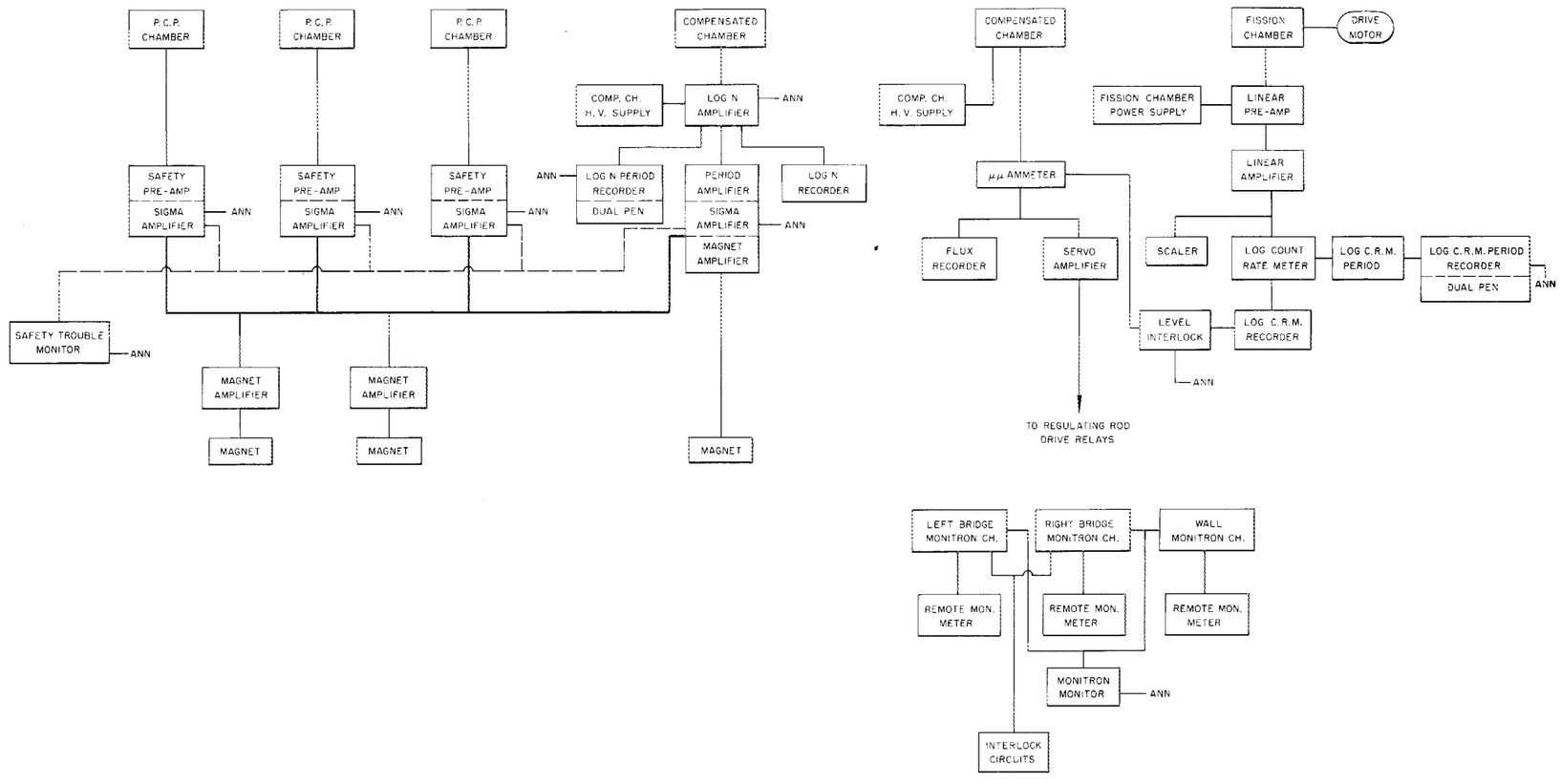

Fig. 3. One-Line Instrument System Diagram for the Bulk Shielding Reactor.

7-15-63

UNCLASSIFIED
2-01-058-0-421

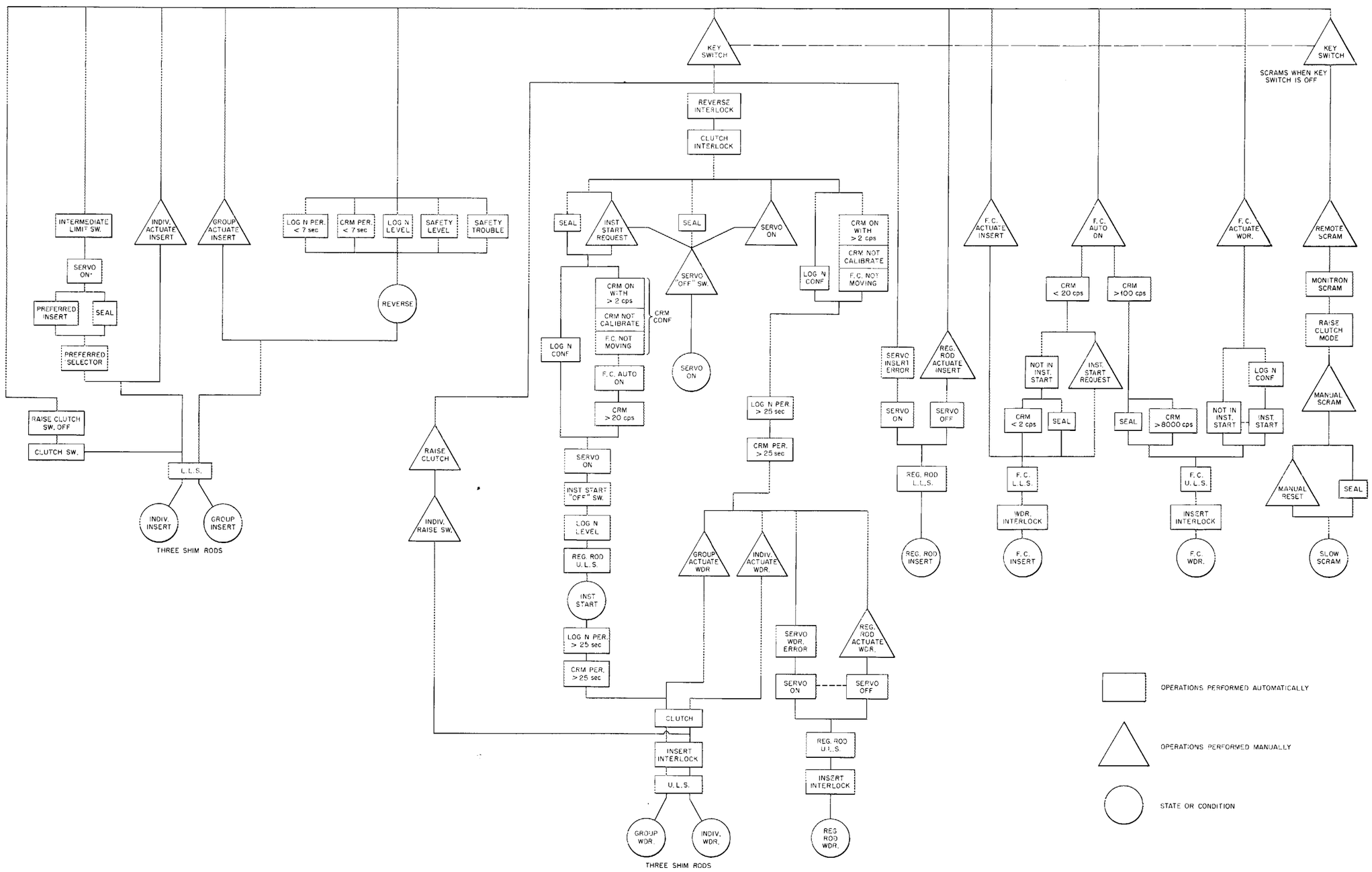

Fig. 4. One-Line Control System Diagram for the Bulk Shielding Reactor.

APPENDIX C

Reactor Operation Check List

To take the reactor critical, the operator should follow the procedure outlined below. If any instrument or circuit is not functioning in accordance with this procedure, the reactor is not to be taken critical.

1. Calibrate log N meter:
   - (a) Turn selector switch from "operate" to "Gnd" position. Log N meter should read 0.0001 (extreme left black mark on meter dial). To change meter pointer position, turn adjustment marked "Gnd set."
   - (b) Turn selector switch to "Lo calib." The meter pointer should now be aligned with the "Lo cal" red mark on the left side of the meter face. To correct meter pointer position, turn adjustment marked "calibrate."
   - (c) Turn selector switch to "Hi calib." The meter pointer should now be aligned with the "Hi cal" red mark on the right side of the meter face. To correct meter pointer position, turn adjustment control marked "gain."
   - (d) If adjustment is needed in any position, the whole procedure (a, b, and c) should be repeated until the meter shows correct readings.
   - (e) Return selector switch to "operate" position.
2. Turn on power switches No. 2 and No. 4 at left rear panel of reactor.

3. Clear the annunciator board by pushing "acknowledge" and "reset" buttons. Trouble indications are as follows:

Annunciator	Circuit
Log N Period	< 7-sec positive period on Log N period recorder.
Log N Reverse	Log Pile power level greater than servo demand.
Count-Rate Period	< 7-sec period on pile count-rate-period recorder.
Safety Level	Have exceeded Simplytrol level on safety trouble monitor.
Fast Scram	< 1-sec period in Log N amplifier and safety trouble monitor.
Reverse	Log N period, count-rate period, log N reverse, level reverse, or two abnormal Σ amplifiers.
Safety Trouble	Safety trouble monitor indicating an abnormal condition in either a Σ or composite amplifier.
Monitron High Level	> 8 mr/hr monitron reading.
Monitron Out of Service	Monitron in a condition other than operating on high sensitivity*.
Shim Request	Instrument operation requires manual withdrawal of a shim rod.

The safety trouble monitor responds to signals from the three log N period channels.

*Note: When monitron is on "low sensitivity," access to pool must be restricted by barriers.

4. Insert key (furnished only to approved personnel) in lock and turn on power.
5. Check to see that the positive voltages of the ionization chamber power supplies are within the operating range and that magnet supplies indicate current flow.
6. Turn on instrument recorders.
7. Calibrate fission-chamber log count-rate meter: Turn switch to "calibrate" position and manipulate "adj. 60 cps" control until recorder indicates 60 counts/sec. Return calibrate switch to "use" position.
8. (a) Visually check the neutron source location.
   (b) Note A-1 PHS setting.
   (c) Withdraw fission chamber to upper limit and determine the PHS at which the noise is counted.
   (d) Record this value in log book.
   (e) Return the PHS to the previous setting. Electronic repairs must be made if this setting accepts noise counts. Insert the chamber to the lower limit.
   (f) Make sure fission chamber is in a position such that the recorder is indicating at least 2 cps. (If counting rate is less than 20 cps, instrument start cannot be accomplished; 2 cps are the minimum for manual start.)
9. Test scram circuits:
   (a) Push scram reset push button.
   (b) Check each sigma amplifier independently by raising the safety rods about 1 inch and inserting a small probe into

the hole marked "scram" on the sigma amplifiers. The clutch pilot light should operate and the magnet drive insert to make up the clutch circuit.

(c) Turn Log N switch to "Gnd."

(d) Raise each rod about 1 inch. Push scram test button on Log N amplifier; period composite amplifier should initiate a scram.

(e) Return selector switch to "operate" position.

(f) Raise rods about 1 inch again and operate red scram button on console; all rods should drop. Push scram reset push button.

10. Set demand helipot on servo amplifier for desired scale reading on the demand meter.

11. Set servo microammeter to most sensitive range.

12. Clear annunciator board. The board must either be clear or the exact cause of any abnormality known.

13. Take reactor critical in the following manner:

(a) Manual Operation:

Check critical experiment data in reactor log book for particular loading in use to determine previous safety-rod positions. Then cautiously pull safety rods to the predetermined position, watching fission chamber recorder reading for any indication of criticality. Pull regulating rod until fission-chamber count rate indicates a slowly increasing level. When the ionization chambers are positioned for 1-megawatt operation, the fission

chamber will provide the best subcritical and low-power flux-level indication. Above 0.1 watt, the period meter, the log N recorder, and the recorder on the micro-ammeter should indicate a power increase. The period should be determined from the response of all responding instruments, not from just the period meter. A 20-sec period interlock on the period recorders will prevent further rod withdrawal if activated. If it is necessary to withdraw the fission chamber before the response of the other instruments is trustworthy, no control-rod withdrawal should be attempted until both the fission-rate and period recorders stabilize. Adjust the microammeter range to achieve the desired power level. After the pre-assigned power level is reached, put reactor on "servo." Complete positioning the shim safety rods as dictated by the experiment. Adjust fission-chamber count rate to about 1 register per second and connect to PA system. Announce the reactor power.

(b) Instrument Startup (requires an indication of ~20 cps from the fission count-rate meter):

Turn fission-chamber actuator to automatic. Set the servo-demand power selector. Press instrument start "on" button. When the regulating rod reaches its upper limit, the shim-safety rods will withdraw until a reactor period of ~40 sec is maintained. Instrument start will remain activated until either the fission chamber is withdrawn or until end of

start is reached. Do not reactivate instrument start if the fission chamber automatically withdraws*. Confidence is required in either the log N or the fission-chamber output before the instrument start mode is converted to instrument start. The instrument start mode remains activated until the reactor has reached the preset demand power.

Adjust fission-chamber count rate to about 1 register per second and connect to PA system. Announce the reactor power.

14. Write on Brown charts the data, time, experiment number, run number, and scale factor.

15. Record data specified in reactor log.

16. Fill out reactor log sheets at hourly intervals (see specimen, Fig. 9).

17. Change of Power:

In general, manual control of the reactor power produces less awkward level changes. Announce over the building PA system (if being used) that the reactor is being taken "off PA." Push servo "off" button, turn fission-chamber automatic positioner to "off."

(a) Increased power: Set servo power demand controls to the new required power. Withdraw regulating rod to put the reactor on an acceptable period. When the desired reactor power level is reached, push servo "on" button. Use the fission-chamber manual withdraw button to position the

*The reactor power will continue to increase until confidence is established in the log N channel and instrument start will continue.

7-15-63

X-972 (Rev. 10-58)

BULK SHIELDING FACILITY

REACTOR DATA

Exp. No.____ Run No. ____

Description _____

_____

Reactor Position _____

Reactor Loading _____

Fission Chamber Location (Grid Plate) _____

Shim-Safety Rod No. 1 _____

Shim-Safety Rod No. 2 _____

Shim-Safety Rod No. 3 _____

Σ_1 ____ M_1 _____

Σ_2 ____ M_2 _____

Σ_3 ____ M_3 _____

Date ____ Page No. _____

Log Book No. ____ Page _____

Operator _____

Reactor On _____

Period Going Up _____

Reactor Full Power _____

Time	Power	Log N Power	$\mu\mu$ Ammeter (Servo)		Monitron			Reg. Rod	Pool Temp.	Fission Chamber	
			Brown Reading	Factor	1	2	3			Position	Counts

Figure 5.

fission chamber to give an acceptable count rate so that the reactor may be put "on" the building PA system after a power level announcement.

(b) Decreased reactor power: Insert the control rods until the desired rate of decrease of power is achieved. Decrease servo demand in a manner such that the servo recorder always remains on scale (the servo back-up will cause a reactor reverse if the power indication on the log N exceeds that of the servo demand by a factor that varies between 2 and 20). When the power becomess less than the new demand, manually withdraw the regulating rod from its lower limit position, then turn servo "on." This action is necessary since with the servo "on" and the regulating rod in the lower limit a shim safety rod is automatically inserted. The adjustment of the position of the fission chamber will create positive periods in that channel. extreme care must be exercised if a period reverse is to be avoided. The method that offers the least frustration is to temporarily disable the period recorder (turn off recorder power switch). Insert the fission chamber while observing the period on the log N amplifier. Then reactivate the period recorder.

18. Shutdown:

Announce the shutdown over the PA system. Turn off fission-rate register. Insert all control rods to lower limits. Turn log N amplifier to "Gnd" position. Insert fission chamber. Turn log

count-rate meter to "calibrate." Turn off Brown recorders. Write on charts all information listed in item 14. Turn reactor power "off." Lock handle and remove key. Turn off power switches No. 2 and No. 4 in the rear of the reactor console. Complete hourly operating sheet and operating log book. Sign the log book to indicate who shut the reactor down.

APPENDIX D

Location of Scram Buttons

Class A Scram

On the reactor console (the only red button).

Class B Scram (This will affect BSR-I and PCA.)

Room 100, pool room: 4 large red buttons on columns adjacent to the 4 pool corners (see Fig. 6).

Room 102, laboratory room: 1 red button in black box.

Room 103, laboratory room: 1 red button in black box.

Room 105, men's room: 1 red button in black box.

Room 201, upstairs at north stairway: 1 red button in black box.

Room 202, outside of room in upstairs hallway: 1 red button in black box.

Room 203, upstairs at south stairway: 1 red button in black box.

Bldg. 3080, machine shop: 1 red button in black box.

Bldg. 3080, machine shop: 1 red button over sink.

All operators should locate and memorize the positions of all of these scram buttons.

A Class A scram removes the A-C regulated power from the BSR shim-safety-rod magnet power supplies. A Class A scram is initiated by the reactor operator and the A-C power circuit reactivated by pushing the scram reset button on the console.

A Class B scram removes the A-C regulated power from the shim-safety-rod magnet power supplies of both the BSR-I and the PCA. Power may be restored to each system individually by pushing the scram reset button

7-15-63

UNCLASSIFIED
2-01-058-0-423C

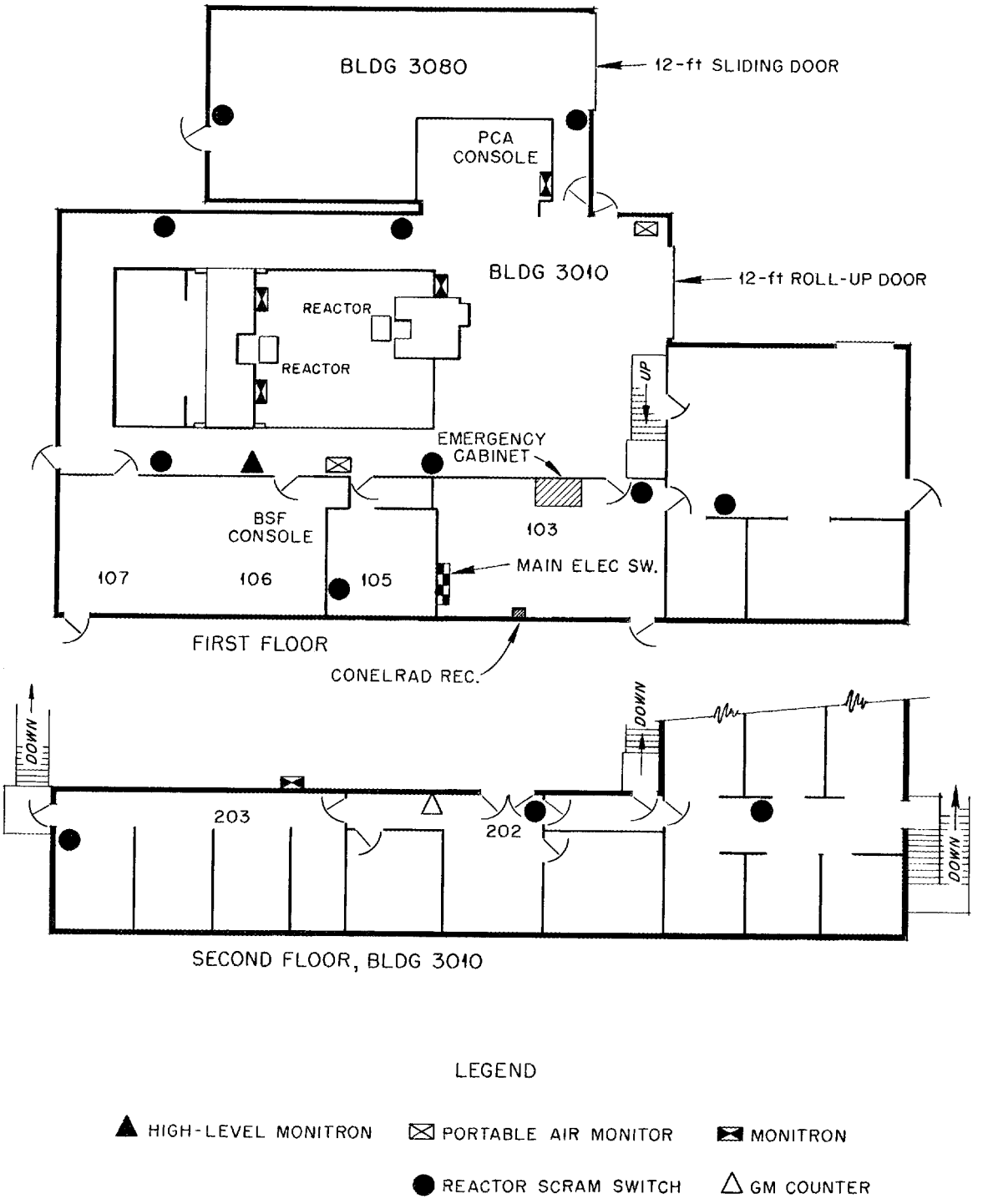

Fig. 6. Location of Scram Switches and Emergency Detection Devices at BSF.

after a careful check to determine the reason this system was actuated.

The buttons that produce a Class B scram should be tested on the first work day of each month.

APPENDIX E

List of Conditions that Might Require an Operator Scram

The most probable conditions calling for a reactor scram lead to an automatic instrument scram. However, the following are examples of situations that might lead to an operator scram:

Class A

Erratic readings of magnet amplifier current.

Oscillations of increasing magnitude showing on servo recorder.

Class B

Persons falling in pool.

Building evacuation for any reason.

Variations in the count rate of the monitor attached to the PA system.

APPENDIX F

Control and Safety Chamber Tests

The reactor chambers are normally located at one of two distances from the core which are;

1. Fully Inserted. This position is used when the reactor is to be operated at a fraction of a watt power level or when critical tests are being executed.
2. 1-Mw Position. Variations of this location are used for power levels to 1 Mw to provide direct readings on the log N and servo instruments.

Control Chambers

The control chambers are checked for compensation after each significant relative change of either fuel or chamber position, if the power reading of the reactor is to be relied on in the lower energy regions (below 10 kw).

The linearity of response should be checked by comparison with the response of the reactor fission chamber. The compensation should be adjusted (by variation of the negative voltage of the chamber power supply) to give a parallel slope for the response of the two chambers.

Safety Chambers

The safety chambers, when located in the fully-inserted position, scram the reactor on test power (level) excursions. When the BSR has "hot" fuel in the core and the loading has been calibrated, the reactor should be brought to 1 megawatt. The safety chambers should be adjusted so that the outputs as noted on the sigma amplifiers read "full power" or 1.0 and

the safety trouble monitors read approximately 70 μamps. The reactor should then be shut down and one safety chamber inserted to the lower limit. Then the reactor should be brought up in power. The power, as read on the compensated chamber, should be noted when the inserted safety chamber reads 1.0 or full power on the sigma amplifier. The power should then be increased until this safety chamber scrams the reactor. This power should be noted. The safety chamber should read 1.5 times the full power on the sigma amplifier, the safety trouble monitor should read approximately 100, and the power for scramming should be approximately 1.5 times the power read at full power. If these readings are off the sigma amplifier meter current should be adjusted. The safety chamber should then be brought back to its original position and the other two safety chambers inserted and checked in the same manner. These tests should be performed for each new loading or every six to eight months, whichever occurs first.

APPENDIX G

Procedure for Adjusting Magnet Currents

1. Apply a volt-box signal to the input of 1 sigma amplifier. The voltages for given reactor powers are as follows:

   power - sigma input voltage

   zero - 22 volts

   100% - 32 volts

   150% - 37 volts.

2.a. Set voltage box between 22 and 32 volts and get magnet current.

2.b. Measure sigma bus voltage at 22 volts input signal. It should be approximately 37 volts.

3. Pick rods up approximately 1.5 inches.

4. With "Bus Protect" potentiometer clockwise, adjust the "Magnet Current" potentiometer on one magnet amplifier at a time until that particular rod drops and record the "drop current" value. Find a "drop current" value for each rod.

5. Apply 37 volts to the sigma amplifier and make the magnet current adjustment so the "drop current" value exists. Measure the sigma bus voltage at 37 volts input signal. It should be approximately 43 - 44 volts.

6. The "Bus Protect" protects from a partially shorted bus line. To set the "Bus Protect" potentiometer, the following procedure is followed:

   After adjustment of the magnet currents, apply 22 volts to the input of 1 sigma amplifier and turn "Bus Protect" potentiometer counterclockwise until a slight decrease (1-2 ma) of magnet current

is noticed.

After completing the adjustments of magnet current and "Bus Protect," connect the preamps back to the sigma amplifiers and adjust the "Grid Offset" so that the output of the preamp is 22 volts.

7. These checks will be performed at approximately six-month intervals.

Internal Distribution

1. R. G. Affel
2. E. P. Blizard
3. T. V. Blosser
4. M. S. Bokhari
5. C. J. Borkowski
6. G. E. Boyd
7. A. D. Callihan
8. C. E. Clifford
9. R. R. Coltman
10. J. A. Cox
11. R. R. Dickison
12. S. J. Ditto
13. E. P. Epler
14. B. R. Fish
15. L. W. Gilley
16. E. E. Gross
17. S. H. Hanauer
18. C. S. Harrill
19. K. M. Henry
20. L. B. Holland
21. J. L. Hull
22. W. H. Jordan
23. C. P. Keim
24. F. Kertesz
25. J. D. Kington
26. C. E. Larson
27. F. C. Maienschein
28. A. J. Miller
29. J. M. Miller
30. K. Z. Morgan
31. F. J. Muckenthaler
32. R. W. Peelle
33. A. M. Perry
34. D. Phillips
35. M. E. Ramsey
36. H. E. Seagren
37. E. G. Silver
38. M. J. Skinner
39. J. A. Swartout
40. J. T. Thomas
41. H. A. Todd
42. D. R. Ward
43. A. M. Weinberg
44. E. O. Wollan

45-46. Central Research Library
47-48. Document Reference Section
49-77. Laboratory Records
78. Laboratory Records (ORNL-RC)
79. ORNL Patent Office
80-229. ORSORT
230-244. DTIE, AEC
245. Research and Development, ORO