ORNL
MASTER COPY

OAK RIDGE NATIONAL LABORATORY
operated by
UNION CARBIDE CORPORATION
for the
U. S. ATOMIC ENERGY COMMISSION

ORNL - TM - 617 Dc 9
44

ENGINEERING ASPECTS OF CONCRETE REACTOR PRESSURE VESSELS

M. Bender

NOTICE

This document contains information of a preliminary nature and was prepared primarily for internal use at the Oak Ridge National Laboratory. It is subject to revision or correction and therefore does not represent a final report. The information is not to be abstracted, reprinted or otherwise given public dissemination without the approval of the ORNL patent branch, Legal and Information Control Department.

LEGAL NOTICE

This report was prepared as an account of Government sponsored work. Neither the United States, nor the Commission, nor any person acting on behalf of the Commission:

A. Makes any warranty or representation, expressed or implied, with respect to the accuracy, completeness, or usefulness of the information contained in this report, or that the use of any information, apparatus, method, or process disclosed in this report may not infringe privately owned rights; or

B. Assumes any liabilities with respect to the use of, or for damages resulting from the use of any information, apparatus, method, or process disclosed in this report.

As used in the above, "person acting on behalf of the Commission" includes any employee or contractor of the Commission, or employee of such contractor, to the extent that such employee or contractor of the Commission, or employee of such contractor prepares, disseminates, or provides access to, any information pursuant to his employment or contract with the Commission, or his employment with such contractor.

ORNL-TM-617

Contract No. W-7405-eng-26

Reactor Division

ENGINEERING ASPECTS OF CONCRETE REACTOR PRESSURE VESSELS

M. Bender

Date Issued

SEP 4 1963

OAK RIDGE NATIONAL LABORATORY
Oak Ridge, Tennessee
operated by
UNION CARBIDE CORPORATION
for the
U.S. ATOMIC ENERGY COMMISSION

Contents

	Page
Abstract	1
Introduction	1
Prestressed Concrete Pressure Vessel Designs	3
Vessel Geometry Considerations	10
Cable and Anchor Arrangement	12
Grouting	13
Concrete Construction Practice	14
Quality and Operational Control	15
Structural Load Conditions for Prestressed Concrete Pressure Vessels	18
Structural Evaluation	22
Ultimate Failure Properties	25
Temperature Considerations	27
Concrete Vessel Lining	31
Design Applications	32
Research and Development Needs	34
Summary	35
References	37

ENGINEERING ASPECTS OF CONCRETE REACTOR PRESSURE VESSELS

M. Bender

Abstract

The current status of information on the use of prestressed concrete for reactor vessels is summarized. The implications of creep, shrinkage, and undefined thermal and mechanical stresses are discussed in terms of reactor pressure vessel integrity. The importance of temperature limits to the vessel design is brought out. Quality control considerations in the fabrication of prestressed concrete vessels are discussed. Such vessels are seen as a means of circumventing the size limitations of steel pressure vessels and are expected to have unique value in reactor system engineering.

Introduction

There has been considerable interest in reactor pressure vessels constructed from prestressed concrete for use in gas-cooled reactor systems. This interest stems mainly from the fact that the British and French natural-uranium-fueled reactor stations of low power density (0.8 to 1.2 kw/liter) require very large pressure vessels. Steel vessels for such installations are affected by the fabrication limitations of thick-walled steel vessels. It is generally recognized that the steel vessel thickness limits are the result of the difficulty in obtaining thick sections of steel (5 in. and above) of large area having the required physical, chemical, and welding properties. Although fabricated steel pressure vessels thicker than 5 in. are not ruled out, there is a feeling that the manufacturing costs of large concrete vessels will be lower than those for steel pressure vessels of this thickness.

Aside from the economic considerations, it has been claimed[1] that concrete vessels can be safer than steel pressure vessels. Thus their use might justify a lessening of the site safety requirements.

The basic principle underlying the use of prestressed concrete for pressure vessels is that prestressing permits concrete to be used in a tension membrane while maintaining the concrete under compressive loads.

Reinforced concrete will also accept tension loads, but in reinforced concrete design the accepted premise is that tension cracks will be permitted and that the reinforcing steel will control the size of such cracks. The crack size is proportional to the tensile strain in the steel, and since the crack width must be held to a small value, there is very little incentive to use high tensile strength steels for concrete reinforcement. An allowable design stress of 18,000 to 20,000 psi is a generally accepted value for reinforcing steel. In prestressed-concrete applications, the practice followed is to install tension-loaded steel in the concrete at locations where the structural members will be subjected to tension loads. The tensioned steel precompresses the concrete so that subsequent tension loads will stretch the tension steel and relieve the precompression but not enough to load the concrete in tension. For this application a high-strength steel can be used effectively to load the concrete to its maximum compressive strength and still provide a margin for accepting a substantial additional tension load. Wire cables having a yield strength of 250,000 psi for 0.2% offset are conventionally used at working loads up to 70% of ultimate tensile strength, including allowances for tension losses caused by concrete dimensional changes, friction, and slippage. The steel is thus efficiently utilized and the concrete is loaded in such a way that tensile cracking is virtually eliminated.

Two techniques are used for placing steel in prestressed concrete. These are described as "pretensioning" and "posttensioning" techniques. In pretensioning the prestressing steel rod or cable is tensioned to a predetermined value in a fixture and then cast in a concrete mold. The concrete is allowed to set until it develops adequate bond strength to hold the steel in tension. The tension fixture is then removed and the tension forces are transferred to the bond between the steel and the concrete. In posttensioning, special ducts are cast into the concrete for later insertion of prestressing steel, and the concrete is cured to the desired strength level. The steel is then installed, tensioned, and fixed in the tensioned position by special anchors.

The advantages of pretensioning are that no special anchors are required, and in some applications final work hardening of the prestressing

wire can be done in place so that friction losses are minimized and maximum tension can be effective in the prestressing steel. Posttensioning has compensating advantages in that the concrete can be precured until it is dimensionally stabilized to minimize losses from creep and shrinkage, further dimensional changes can be compensated by retensioning, cables can be inspected and replaced for maintenance when necessary, and the prestress does not depend upon the tenacity of the bond between the concrete and steel (although grout can be added, if desired, to supplement or replace the attachment anchors).

Prestressed concrete reactor vessels are a natural evolution of reactor systems engineering. Radiation shielding always demands a thick high-quality concrete structure, and the extension of this concrete structural arrangement to pressure vessel capability requires only that prestressing of the concrete be practical for the desired pressure level. This joining of the shield and pressure vessel minimizes both space and materials and, therefore, has obvious economic advantages.

Prestressed Concrete Pressure Vessel Designs

The first important application of prestressed concrete as a reactor vessel is that of the Marcoule G-2 and G-3 installations in France. These vessels are cylindrical with concave heads, as shown in Fig. 1. The designs were selected with the thought[2] that the cylindrical section could be readily prestressed, but the heads would be more difficult to handle and prestressing could be avoided by using a concave head that would always be in compression. The Marcoule vessels are wrapped with prestressing cables covering an arc of about 270°, and the cables are anchored under the vessel to prestressed concrete foundations. Since the cable encircles the cylindrical section of the vessel, there is intimate contact between the cable and its duct, and a high frictional component had to be considered when the cable was prestressed. The frictional load was reduced by using lubricated sliding shoes attached to the cable which could move when the cable was stretched. The frictional component was, as a result, less than 1% of the prestressing load. In order to allow for the axial pressures applied on the vessel heads, prestressing rods

Unclassified
ORNL Dwg. 63-2792

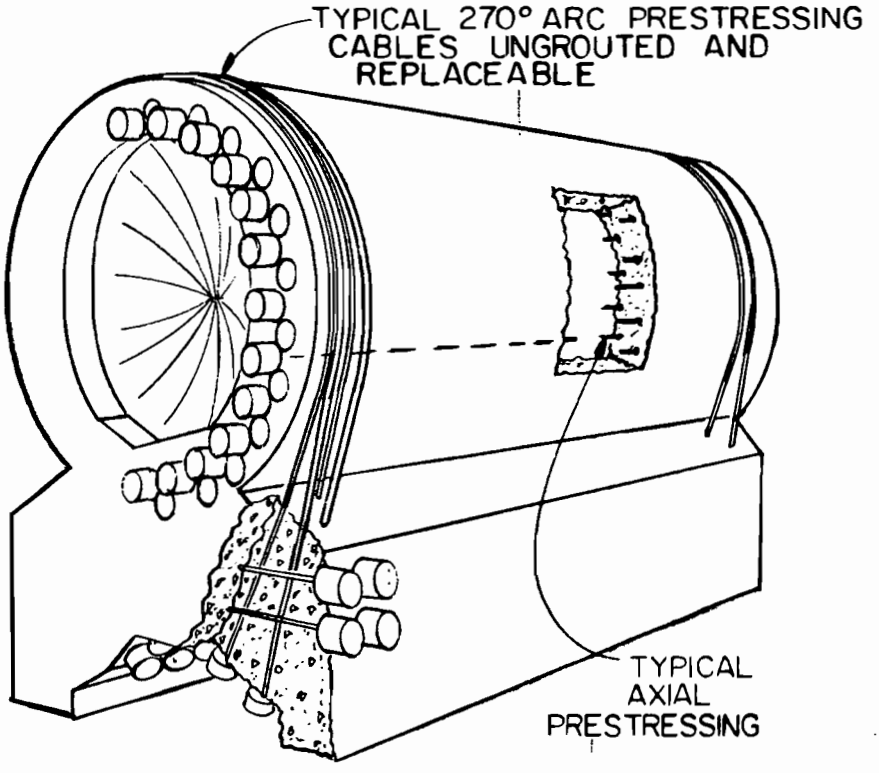

Fig. 1. Marcoule G-2 and G-3 Cylindrical Prestressed Concrete-Pressure Vessel.

were inserted through and parallel to the cylindrical section of the concrete. The rods apply an axial resistance to the forces on the pressure vessel heads. These vessels work well at Marcoule, but the sliding plates were expensive, and in a large-diameter vessel it would have been most difficult to install sufficient prestressing to resist the loads. Furthermore, the concave heads resulted in a substantial loss of concrete vessel volume and were poorly suited to the insertion of the access nozzles for the reactor.

The designers of the French EDF reactors, EDF-1 and EDF-2, recognized the limitations of the Marcoule concrete pressure vessels and therefore selected steel pressure vessels, as in the case of the United Kingdom reactors. However, after experiencing difficulties with the EDF-1 vessel and the subsequent increase in the cost of the EDF-2 vessel, which was brought about by the requirements for higher quality steel and more rigorous inspection, there was a reawakening of interest in concrete vessels in France. Consequently the Electricité de France designers in planning the construction of the EDF-3 reactor decided to re-examine the application of concrete pressure vessels for their gas-cooled nuclear power stations.

The design selected,[3] as shown in Fig. 2, provides a vessel with an octagonal inner bore and an essentially cubical exterior with prestressing steel placed in a manner similar to that of the reinforcing steel in a reinforced-concrete highway culvert. Prestressing cables are laid in planes along the sides of the "culvert" and anchored at their ends. Alternate layers are, respectively, parallel or perpendicular to the vessel's long axis. Similar prestressing restrains the concrete end covers. Supplemental prestressing steel is also provided at the corners where stress concentrations are high.

British interest in concrete pressure vessels began with some experimental work done by the General Electric Company–Simon-Carves group, builders of the Hunterston power station, who tested[4] a model pressure vessel of cylindrical shape using the "preload" technique for prestressing. In this concept, shown schematically in Fig. 3, a wire mesh frame is first constructed around an inner liner, which is then sprayed with a concrete

Unclassified
ORNL Dwg. 63-2793

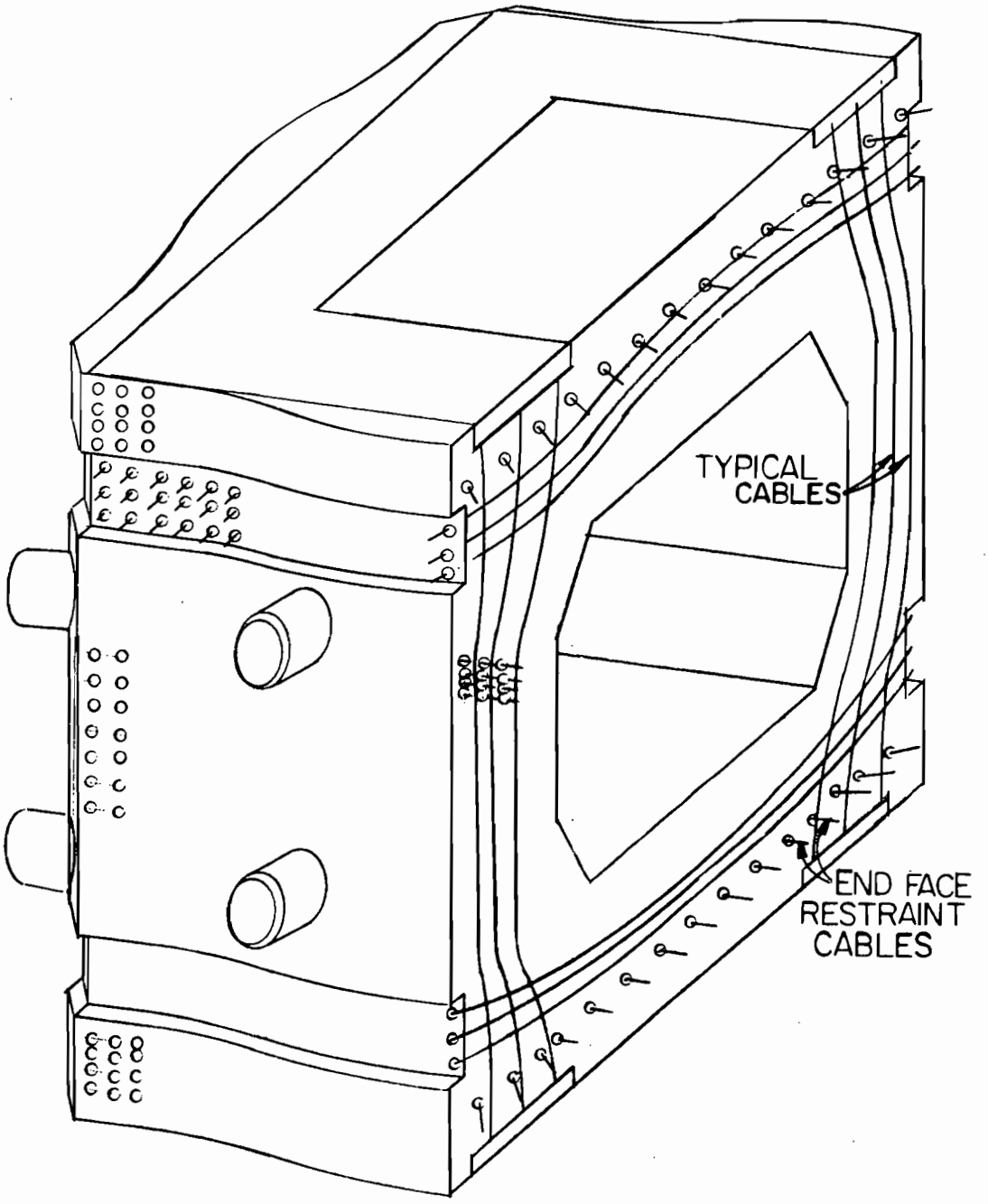

Fig. 2. EDF-3 Culvert Concept.

Unclassified
ORNL Dwg. 63-2794

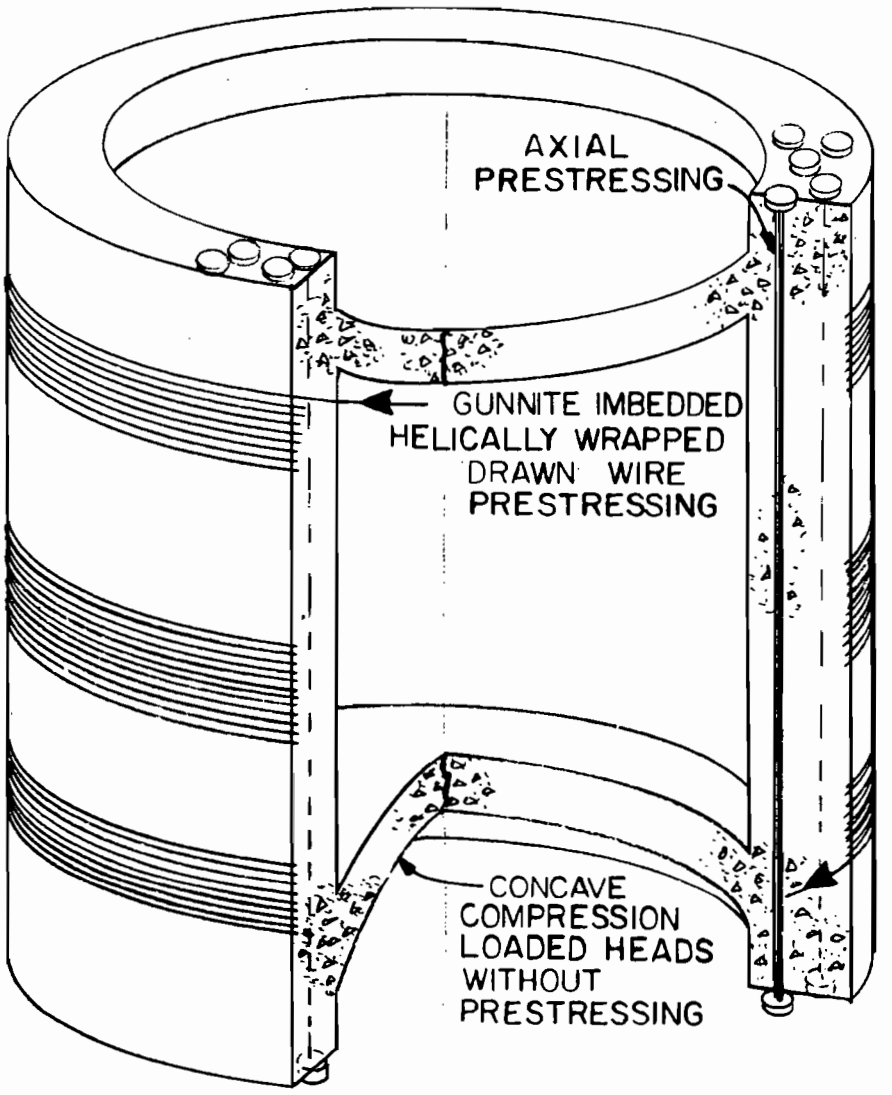

Fig. 3. General Electric Company-Simon-Carves "Preload" Prestressing Concept.

mix, like Gunnite, into which anchors are set for attaching prestressing cables. The prestressing wire is then fixed to the anchors and spirally wrapped around the concrete. At the same time the wire is drawn sufficiently to assure a high prestressing load capability by work hardening. After a layer of wire is placed in this fashion, another layer of concrete is sprayed over it onto the first layer of concrete and allowed to set, and the wrapping is repeated, thus building up layers of prestressed concrete. By repetition of this process it is possible to develop a thickness of prestressed concrete of indefinite size that is limited only by possible relaxation of the inner concrete and the prestressing cables.

Although in concept the "preload" method is the most effective structure visualized for concrete vessels, it has certain inherent disadvantages. Control of the prestressing operation is limited to assuring that the cable-stretching device is reliable and is properly controlling the draw of the cables. It should be noted that the amount of drawing is critical, since the strength of the cable is to a major extent established by the cold-working process that occurs during the drawing operation. Also, if there is interest in assuring that the cables are not subjected to radiation damage, there must be supplemental neutron shielding within the reactor vessel, which uses valuable space. Finally, there must be very close control over the concrete mix to assure that it has the required structural properties. In conventional tank construction, builders have had considerable success with this prestressing technique.

For the Oldbury reactor installation, The Nuclear Power Group (TNPG) proposed a vessel design,[5] shown in Fig. 4, which is probably intermediate between the French Marcoule and EDF-3 concepts. It utilizes helically wrapped cables around a cylindrical concrete vessel, and each cable covers about a 60° arc of the vessel's circumference. Alternate layers are wrapped in reverse direction, basket-like, and the helical cables thus provide lateral and axial prestressing with relatively uniform distribution of the prestressing cables. Because of the long lead on the helix angle, the frictional resistance is very low. It was found to be less than 2% of the prestressing load if the midsection of the cable were greased prior to tensioning. (For the French EDF-3 design the frictional

Unclassified
ORNL Dwg 63-2795

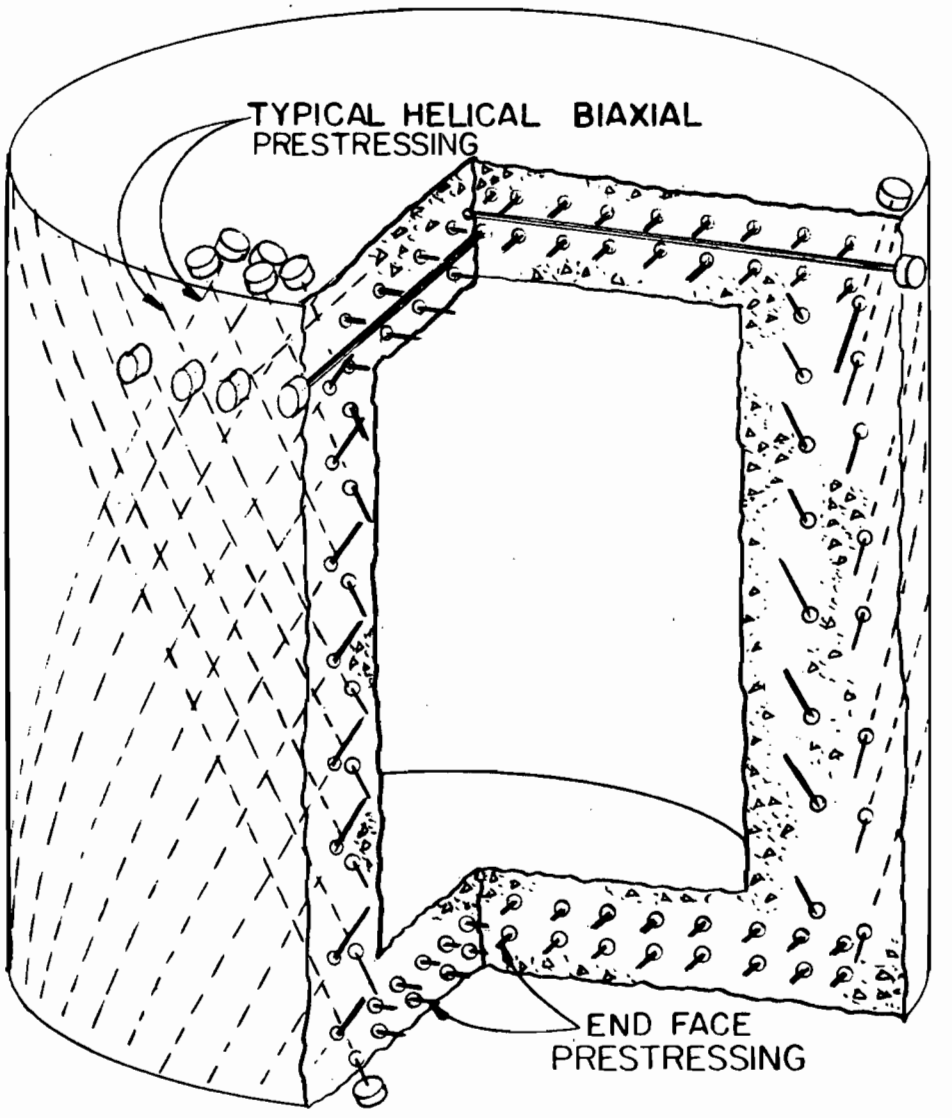

Fig. 4. Oldbury 60° Helical Wrap Concept.

component is virtually nil, since the cable is essentially stretched along its axis.) The Oldbury design has the advantage that there is only one geometrical pattern for the prestressing in the cylindrical section of the vessel. The heads of the vessel are managed very much like those of the French EDF-3 design, with the helical wrap taking the end thrust on the heads of the vessel; a grid of cables is provided in the end slabs to assure that the end thrusts are distributed to the helically wrapped cable.

A fifth concept for a concrete pressure vessel is now under consideration for the United Kingdom's reference design[6] of the Advanced Gas-Cooled Reactor. The vessel is spherical at its inner surface with the prestressing provided by a six-sided polyhedron made up of cables anchored to buttresses along great circles of the vessel circumference, as shown in Fig. 5. In this design the prestressing is provided by segments of cable stretched over a quadrangle formed by the buttresses. Each layer of cables is laid perpendicular to the preceding one. Since the segments of the prestressing cables are nearly straight, the frictional effects should not be large. The claim is that the prestressing distribution is quite uniform in such a vessel and, because of the essentially spherical shape of the vessel, the membrane stressing is minimized by a factor of two over that of a cylindrical vessel of the same diameter. The AGR concept suggests a vessel about 87 ft in inside diameter, which would require only 8 ft of prestressed concrete to hold a pressure of 300 psia.

Vessel Geometry Considerations

Each of the several concepts discussed above has geometrical advantages that govern its design value. A cylindrical vessel with concave heads is useful only when the vessel diameter can be small compared with the height. The concave heads take up space in the cylindrical section that is equal to one vessel diameter in length, so it is apparent that a substantial volume is lost when the ratio of the diameter to the height is large. The prestressing necessary for this unusable cylindrical volume can be applied more effectively in a flat or slightly convex head.

Unclassified
ORNL Dwg. 63-2796

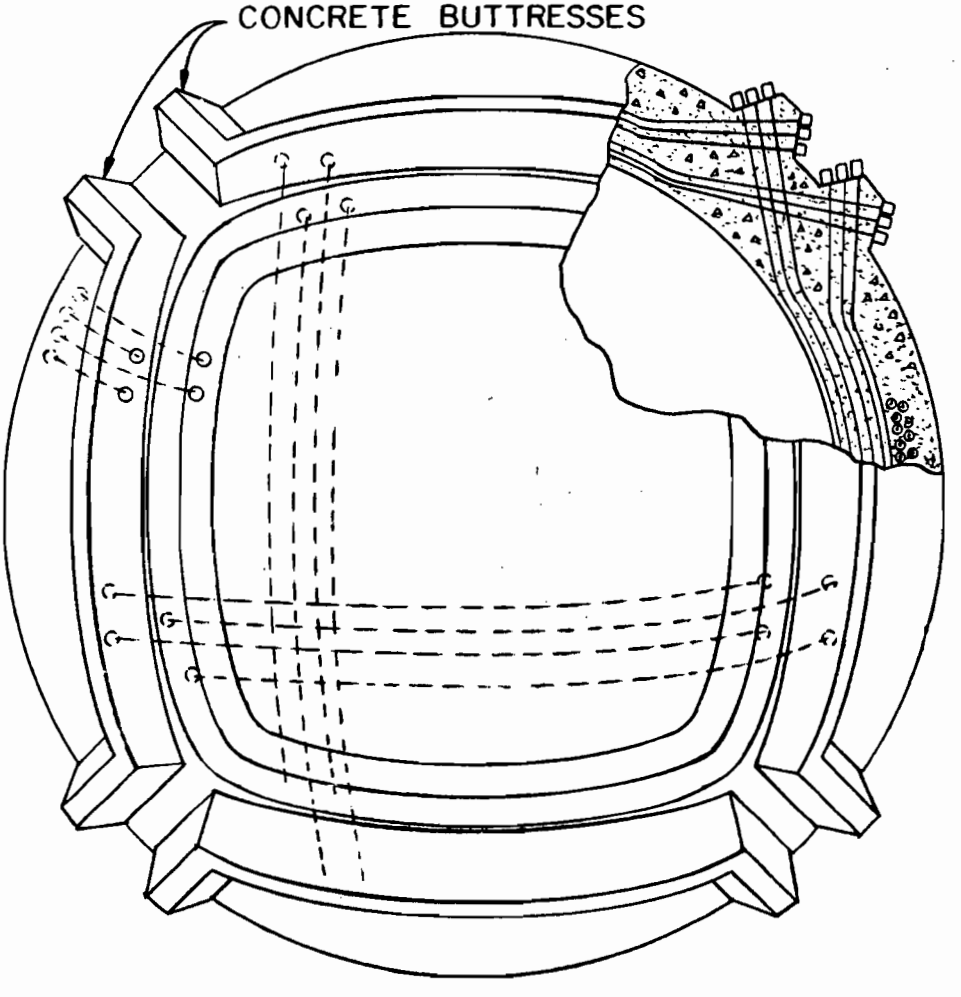

Fig. 5. AGR Spherical Vessel with Six-Sided Polyhedron Outer Surface for Minimum Membrane Loading.

The spherical vessel of the AGR and the cubical vessel of the French EDF-3 are not radically different. The use of curved sides in the spherical concept does reduce the principal membrane stresses, but the placement of nozzles is more difficult because of the limited surface area available, and the frictional effects will probably be greater.

The Oldbury cylindrical arrangement has advantages from the standpoint of consolidating cable-anchor locations if the vessel ends can accommodate sufficient space for the anchors. Other combinations of spheres, cones, cylinders, and polyhedrons may also have advantages, depending upon the specific reactor requirements.

Cable and Anchor Arrangement

The current design practice for arranging cables and anchors in prestressed concrete pressure vessels is similar to that accepted for conventional prestressed-concrete construction. The cable arrangement is selected on the basis of available anchor space, access for and size of the tensioning jacks, inspection and monitoring requirements, and maneuverability of the cable. Precast and precured concrete anchor plates are used in both the EDF-3 and Oldbury designs.

At Oldbury the cable is anchored by the Freyssinet technique in which the 12 groups of seven-strand cables are slipped into notches in a conically shaped plug, the cables are tensioned from one end to the desired stress level, and then the plug is driven into the mating conical hole in the anchor plate to wedge the cables against sides of the anchor plate.

A modified form of the Lee-McCall system was used in the construction of the EDF-3 vessel. In this arrangement a spirally wrapped bundle about 1.5 in. in diameter is preassembled; a soft iron wire is wound around the cable ends; and a threaded fitting is cold swaged onto the cable ends. The cables are then inserted into the duct, and a threaded nut is loosely screwed onto each cable end. Next, the cables are tensioned by hydraulic jacks attached at each end, and the nut is snugged against the anchor plate to hold the cables in tension. The cable jacks are then released.

The selection of cable size is determined by the desired cable tensile strength and the type of jacks to be utilized. A hard-drawn wire having an ultimate tensile strength of about 250,000 psi is a generally accepted standard for prestressing wire and has been used in both British and French applications. The British cable arrangement is somewhat larger than the French (3.4 in.^{2} versus 1.8 in.^{2}), and, since it is stressed from only one end, it requires much larger hydraulic jacks; however, the convenient arrangement of the prestressing gallery at the bottom of the reactor vessel makes this a minor penalty.

The channel for the prestressing cable is usually constructed by casting steel pipe into the concrete structure. The prestressing cable is then pulled through the pipe opening. An alternate technique is to wrap the cable in a flexible metal sheath and cast the entire assembly into the concrete, but this practice has not been followed in concrete reactor vessels currently under construction.

Uniform tensioning of the cables is extremely important. The cables are normally prestretched and dimensionally stabilized in the factory to assure that nonuniform slack in the wire strands is eliminated. Anchor plates are accurately located to assure that the cables are stretched along the required axis. Local compressive failure of the anchors must be avoided by assuring good distribution of the anchor loads, and supplemental steel reinforcing may be provided to resist local bending moments.

The selection of helical or straight cable arrangements is purely a matter of balancing anchor accessibility, frictional resistance, and cable-handling factors. Obviously, straight cables minimize the friction effects but cannot absorb bidirectional loads, so more anchors are required that must be distributed over more vessel surface locations.

Grouting

In many posttensioned cable applications a Portland cement grout is pumped into the cable duct to fix the cable in position. An aluminum powder expansion agent to minimize shrinkage may also be included when the ducts are large. Where expansive grouts are used, care must be taken

to establish that the expansive properties of the grout are retained at the concrete operating temperatures. The value of cable grouting for pressure vessels is not easily assessed.

On the positive side is the inherent corrosion protection provided and the back up given to cable anchors. Experiments by the EDF-3 designers have shown that grouted cable will retain its prestressing for extended periods without relaxation even if the anchors are released. Thus uncertainties associated with local failures in the heavily loaded anchor locations are substantially relieved. The grout may also have significant value in assuring that gross rupture can be avoided.

On the negative side is the fact that once the grout has been placed, inspection and replacement of cables and retensioning to restore prestress lost by shrinkage or creep is impossible. Although the practices of the French on G-1, G-2, and EDF-3, as well as early evaluations of the Oldbury vessel by the United Kingdom, seem to lead in the direction of nongrouting, the matter is far from closed. The really important issue is whether the improved servicing access provided by ungrouted cable will significantly improve the vessel reliability beyond that which grouting can provide.

Concrete Construction Practice

The erection of prestressed-concrete reactor pressure vessels has not developed any radically new requirements for the placement of concrete. Portland cement concrete has been used in both French and British applications. A nominal compression strength of 5000 psi has been required. Placement practices are similar to those required in good-quality reactor shielding, where uniform aggregate is specified and careful vibration follows the concrete placement. Because of the structure's physical size, a monolithic pour is impractical, and a great deal of care is taken to prepare the concrete surface before each successive lift so that a good bond is obtained. In both the EDF-3 and Oldbury vessels, substantial bending loads can be applied to the end closure by the weight of the vessel during erection. Because of this, some prestressing cable must be installed during the process of erection, and the concrete in this early structure must be allowed to cure sufficiently to accept this prestressing

before concrete erection is continued. Since the concrete placement may span a period of 12 months without interfering with the reactor construction schedule, no major time penalty is suffered because of the curing interval.

Quality and Operational Control

A high level of integrity is required to meet the reliability standards of reactor pressure vessels. Over the past 15 years, steel reactor vessel technology has been aimed at establishing the quality of the steel by improving methods for detecting and identifying flaws, improving welding techniques, learning more about vessel behavior during stress transients, and attaining a better understanding of the general physical properties of vessel steels.

The knowledge of concrete has not reached an equivalent technological level. The density of a concrete structure can be roughly measured by radiographic techniques, and sonic pulse methods can be used to locate major material discontinuities. Unfortunately, these methods are mainly qualitative, and they are useful only where there is a great margin of safety between attainable and acceptable quality.

Investigations of concrete material properties and behavior under load conditions have provided mainly empirical correlations for specific applications. Although the available information is adequate for normal concrete structural design, the nature of the construction methods, the wide variation in raw materials, the latitude permitted the builder in selecting the concrete mix, and the environmental conditions during construction leave much uncertainty about the nature of the finished structure.

The principal assurance of concrete reliability rests with the builder, since he is fixed with the responsibility for maintaining concrete quality. The following tools are available to him:

1. Maintenance of careful records of the concrete mix.

2. Systematic review of concrete test specimens for structural adequacy.

3. Rigorous supervision over the placement operation to avoid aggregate settling, excessive pour height, unsatisfactory form preparation and installation, and improper temperature and humidity conditions.

4. Careful attention to the curing process.

5. Proper preparation of construction joints.

Since the labor used in concrete placement is for the most part unskilled, the supervisors must be constantly alert to accidental malpractice. This responsibility is comparable to the requirements of steel vessel construction, except that the standards of acceptable quality are poorly defined and based mainly on individual judgement.

The manufacture and installation of the prestressing cables are less dependent on local construction conditions. The chemistry of the steel wire is already routinely controlled at the mill, and the wire manufacturing process has inherent quality-screening features, since the wire is stressed well beyond its yield strength during the drawing process. Nevertheless, drawing temper, die wear, and mechanical flaws all have an effect on the strength capability of the wire. Statistical sampling can be used to make certain that wire quality is maintained.

The assembly of the cables is another phase of construction where quality must be controlled. Uneven stretching of the wire within the bundle would make uniform tensioning during installation impossible. Standards for acceptance of nicks and dents must also be established, since some defects of this type are unavoidable in the assembly process. Where attachments are used to grip the cable, as in the Lee-McCall technique, the strength of these attachments must be verified by testing prototype assemblies, as well as by random testing of production units.

Prior to insertion of the cable, the cleanliness of the ducts must be established. Abrasive surfaces or local debris can cause deleterious nicks or develop local kinks that will lead to excessive stress concentrations. The cable anchors must be placed so that the cable is tensioned along the required axis for effective prestressing. It is extremely important that no local weaknesses be present in the vicinity of the anchors where high stress concentrations are absorbed.

The final control of the prestressing must occur during the posttensioning. The loads applied by the hydraulic jacks can be measured and,

if the wires are gripped uniformly, will give a good measure of the tension loads; but direct measurement of wire strain may be a desirable device for assuring correct posttensioning.

The vessel liner represents a special problem, since its adequacy is dependent on limiting the strain between anchor points. Buckling during assembly through weld distortion, by differential thermal expansion, or by other undefined means must be controlled because an accurate fit against the concrete is essential. The placement of the cooling devices must also be carefully supervised, since assurance that cooling coils are properly located is fundamental to the adequacy of the structure. A local hot spot could destroy the entire vessel.

In addition to rigorous inspection during erection, some final test of the structure would appear to be essential. For steel pressure vessels, a pneumatic test at 1.25 times the design pressure is normally specified. A similar test could be specified for the concrete vessel. It is not clear that this would have any appreciable effect on the prestressing cable loads, but the distribution of these loads around vessel openings and at the juncture between head and shell are not amenable to structural analysis. A test is the only means of establishing whether the loads are properly shared when the vessel is pressurized. Probably direct measurement of the strains in the critical prestressing cables should be obtained during this test.

An important question to be answered pertains to the allowance for early shrinkage and creep prior to placing the vessel in service. There are sufficient data available to show that, in small concrete specimens, two-thirds of the concrete shrinkage will occur during the first 90 days after pouring, but the behavior of large concrete structures cannot be readily extrapolated from these data. If the drying rate is very slow, the concrete may behave like a dam structure, where virtually no shrinkage is observed after the initial set of the cement. The practice here will depend upon the design assumptions. If sufficient prestressing margin can be allowed so that further posttensioning does not have to be programmed to recover the cable relaxation allowed by shrinkage and creep, the rates of dimensional change will be unimportant and only the ultimate limits need be established.

Monitoring after the vessel is put in service should be given careful attention. Some continuous monitoring of strain in critical cables is probably justifiable. The condition at the inner surface of the concrete is important to the life of the liner, but it is difficult to establish a means of checking its condition. Possibly some local inspection plugs could be installed without seriously affecting the concrete structure. Surface corrosion of the liner may also deserve some attention. Since the space between the liner and the concrete will breathe, there is a possibility that the external surface of the liner will corrode. If sufficient corrosion-scale buildup can be tolerated to fill voids, the corrosion should be self limiting, but the liner behavior under these conditions should be carefully examined before the effect is passed off as unimportant.

When compared with the type of inspection and operational control accepted for steel reactor vessels, the basis for establishing reliability in concrete reactor vessels appears to be nebulous. Perhaps only in the production of steel wire does the control of construction variables equal that used in steel reactor pressure vessels. Standards for acceptable quality will need to be carefully established if such vessels are to withstand the scrutiny to which reactor vessels are currently subjected.

Structural Load Conditions for Prestressed Concrete Pressure Vessels

In order to understand the demands on a prestressed concrete pressure reactor vessel, a good appreciation of its operating behavior is needed. The vessel is subjected to a variety of loads that must be considered from the beginning of the concrete placement and continued throughout its lifetime. These various phases of loading are listed in Table 1 according to their effect on the structure. These loading conditions do not allow for accidental overpressuring or local hot spots due to loss of cooling which could have various effects on the vessel, depending upon the degree of structural load change and the circumstances.

The importance of the loading conditions cannot be overemphasized. Since shrinkage and creep are time-dependent phenomena, they continue

Table 1. Load Conditions for Prestressed Concrete Vessels

	Phase	Structural Factors	Operational Considerations
I.	Early construction	Shrinkage, dead weight, local bending, thermal stress from concrete heating	Time allowance for curing, partial prestressing to absorb bending loads
II.	Initial prestressing	Creep	Control of posttensioning sequence
III.	Overpressure proof test	Local tension loading of concrete, creep, change in stress distribution and possibly stress reversal	Posttensioning relaxation, local cracking
IV.	Initial pressure operation under nuclear power	Thermal stress, shrinkage from increased temperature, thermal expansion, change in stress distribution	Posttensioning relaxation, local creep, or failure
V.	Continuous operation	Thermal and pressure stress cycling (small but fairly frequent), long-time shrinkage and creep	Continuing relaxation of posttensioning from creep and shrinkage, local fatigue from stress cycling
VI.	Accidental depressurization	Combined thermal stress and shift of compression loads	Accelerated creep and relaxation of posttensioning
VII.	Planned depressurization	Combined shift in thermal stress and compression loads	Accelerated creep and relaxation of posttensioning

throughout the vessel life, but their rates are very much a function of temperature and stress. For this reason, transient conditions can accelerate dimensional changes and cause a marked reduction in the prestressing. It should also be appreciated that from the time when the first posttensioning is applied until the end of the vessel's lifetime, the concrete is affected by structural load changes. When the vessel is posttensioned, the highest compression stress is near the vessel exterior, and the lowest is near the inner surface. When the pressure load is applied, there is a general reduction in the concrete compressive stress. Except for shrinkage and creep allowances, the compressive load at the inner surface is virtually nil, while the load at the external surface is the net compressive load remaining after the additional tensile strain from the vessel pressure is applied to the prestressing cable. The total compressive stress remaining on the concrete is that required to allow for creep and shrinkage plus the vessel overpressure increment to be resisted by the prestressing wire.

In order to retain the prestress, the wire strain must be maintained. Since shrinkage and creep of the concrete will permit a continuous reduction in the wire strain, the amount of pressure the vessel will hold without loading the concrete in tension will be greater during the early part of its life than at the end unless retensioning can be applied. In specifying the design conditions it is therefore necessary to consider the time and sequence of loading.

During phase I (see Table 1), the applied load, while significant for the concrete, may not be very high in terms of the ultimate design value. Thus sufficient posttensioning for early construction loads may be made effective as soon as the concrete has a nominal amount of strength.

The full posttensioning should not be applied in phase II until the concrete has cured sufficiently to have attained high strength and has undergone the bulk of its early shrinkage. The posttensioning will have to be applied in a predetermined pattern so that no unbalanced bending stresses are introduced, and early creep effects will probably require that each cable be subjected to more than one tensioning operation.

In the overpressure test of phase III, some advantage can be taken of the fact that an increment of the cable prestressing has been reserved

for long-time creep and shrinkage that is not required at the time of this test. The overpressure test may therefore be safely applied at a higher level during the early vessel life than during its later stages without deleterious effect on any of the structure, with the possible exception of structural discontinuities. In discontinuity areas flexural effects on the concrete behavior and uneven distribution of prestressing wire loads must be considered. Since creep will be accelerated during this test wherever stress concentrations occur, it will be important to observe the strain behavior of the prestressing wire at this time. Stresses at cable anchors, for example, might be unusually high and might therefore cause excessive creep and possibly local failure.

In phase IV, local stress concentrations will be somewhat less than in previous phases, but thermal stresses will be superimposed. Since it is unclear whether the concrete will behave elastically under thermal stress conditions, it will be necessary to follow the strain behavior of the prestressing wire at this time. The temperature rise may also accelerate shrinkage, and the combined effect could cause an accelerated rate of relaxation in wire tension. This must be watched closely to make sure that the effectiveness of the wire is retained at the desired level.

In phase V, a steady reduction in the prestressing wire strain will be observed as the concrete continues to shrink and creep under load. Because of this effect the prestressing cable strain, and thus the concrete overpressure capability, decreases with time unless subsequent retensioning is performed. Fatigue may not have significance, but this will depend very much on the operating conditions. A wide variation in operating pressures might introduce peculiar effects. Normal changes in power level and possibly in temperature level will alter the thermal stress distribution, and if these stresses are relieved plastically, each temperature cycle will create a large stress reversal and cause further dimensional change.

An accidental depressurization occurring while the thermal stress distribution is retained, as defined in phase VI, could superimpose high stress conditions of temperature and wire tension on the concrete and would have to be investigated for its effect on the concrete behavior.

The planned depressurization of phase VII could be as bad or worse than the accidental case in phase VI unless the temperature behavior of the vessel was properly controlled. The concrete has a high thermal capacity and a low thermal diffusivity, so considerable time may be required if thermal stresses are to be relieved before depressurization.

Because of these operational considerations, the transient behavior of the vessel must be thoroughly understood. In this respect the concrete vessel is greatly different from conventional structures where transients do not drastically change steady-state conditions.

Structural Evaluation

Evaluation of the structural behavior of the vessel under normal operating conditions, during initial prestressing, and under accident conditions has been the topic of much speculation. General Electric Company-Simon-Carves used[4] elastic theory of thin shells to establish the stress distribution in the vessel. This analytical technique is comparable to that used in the evaluation of steel pressure vessels and is probably adequate as long as the behavior of the vessel is judged by the stresses in the prestressing cable; however, it does not give an accurate measure of the concrete behavior for the following reasons:

1. Thickness-to-diameter ratios in the concrete shell are large compared with those within the limitations fixed for thin-shell theory.

2. The elastic deflections that might be considered for the concrete are the same order of size as shrinkage and creep dimensional changes in the concrete. Permanent deformations must therefore be considered in the design. (For example, a 2000-psi concrete compressive load causes an elastic strain of about 0.25% and shrinkage and creep over a 20-year period cause an equivalent dimensional change.) The sizes of nonelastic deformations in concrete, even over a very short time span, are illustrated[7] in Fig. 6.

3. Load distribution at the junction of the shell and the head and around large openings or clusters of nozzles as in conventional pressure vessels cannot be evaluated with presently available analytical techniques. The practice of providing supplemental compensatory reinforcing around

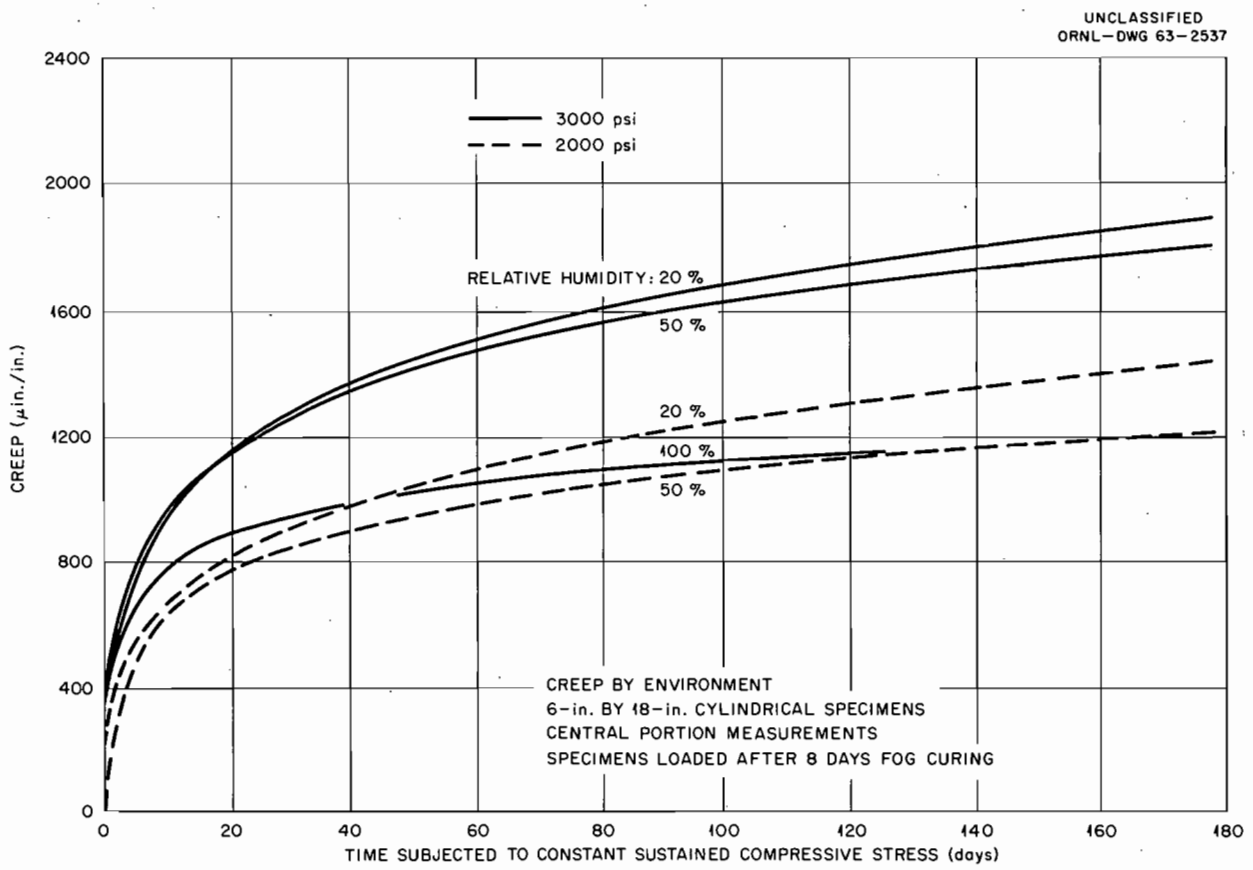

Fig. 6. Shrinkage and Creep Behavior of Eight-Day-Old Cylindrical Concrete Specimens Loaded in Compression Under Varying Conditions of Relative Humidity (ref. 7). (From Highway Research Board, Proceedings, Vol. 39 (1960), John R. Keeton, p. 321.)

openings, as provided under the ASME Unfired Pressure Vessel Code, is not particularly suited to concrete pressure vessel applications.

4. The behavior of anchor stress concentrations has not been considered.

The work of General Electric Company—Simon-Carves indicates that elastic analysis may underestimate the short-time ultimate load capability of a concrete vessel, but there is no clear indication that the capability of the vessel to withstand short-time ultimate loads is a measure of its performance adequacy. Time-dependent structural factors, such as creep, shrinkage, and thermal considerations, are more likely to govern the vessel's structural capability. Elastic analysis does provide a reference basis to which structural behavior of preconstruction models and subsequent behavior of the full-size vessel can be compared.

This situation is not unique with concrete pressure vessels, and in recent years steel pressure vessel design practice has been expanded to include fatigue analysis, thermal stress evaluation, allowance for material defects, and consideration of stress concentrations. There is consequently a significant amount of design uncertainty even in steel vessels. In order to allow for the uncertainties in steel vessel design, the design stress is limited to 62.5% of yield strength for 0.2% offset as established by elastic analysis, while a factor of 4 between ultimate strength and design stress is required under the ASME Unfired Pressure Vessel Code. The Code further states that "due allowance" must be made for undefined secondary stresses. In concrete vessels the question then is, having made an elastic analysis of the concrete structure, how much margin should be provided between the ultimate strength of the material and design stresses? For prestressing cables the accepted practice in nonpressure vessel applications is to use 70% of the ultimate tensile strength. Since prestressing wire develops a yield strength that is about 90% of the ultimate tensile strength, the margin between design and yield strength is not very much less conservative than that used in steel pressure vessels, but the margin between design and ultimate strength is very narrow by comparison. The justification for reducing these safety margins lies mainly in secondary stress allowances, which are negligible in the prestressing steel but can be significant in

pressure vessel steels. Further, the more uniform manufacturing processing of prestressing wire probably assures a higher level of quality control than that attainable in rolled steel plate. Thus the narrow design margin suggested for prestressing wire may be consistent with the wider margin used in evaluating steel plates for pressure vessels.

The design margin for the concrete itself is less easily determined. Are concrete stresses calculated by elastic theory really meaningful even when only compressive loading of the concrete is considered? How uniform is the compressive strength of the concrete? What effect does local yielding in the concrete anchors have upon cable prestressing? How are loads distributed to the prestressing cables around openings and nozzle clusters? What manner of load distribution is applied to the concrete by differential thermal expansion from temperature gradients across the concrete? These are design factors which elastic analysis does not describe and neither short-time model tests nor full-scale pressure tests will define. The allowable stresses may be extrapolated from experience with other prestressed concrete applications, but it will be very important to follow the behavior of the first reactor vessels closely in order to observe how well the design analysis describes the structural characteristics of the vessel.

Ultimate Failure Properties

In considering a reactor vessel design, the effect of unusual accidents is of primary importance. A generally accepted premise for steel vessels is that gross rupture must not be possible, and thus brittle fracture must be avoided. Emphasis is therefore placed on assuring that the ductility of the vessel material is retained. Concrete properties could hardly be described as consistent with the ductile properties required in steel vessels, but so long as the concrete is loaded in compression there can be no concern for gross rupture from brittle fracture. On the other hand, high tensile loading will almost assuredly lead to brittle fracture of the concrete; flexural loads can also cause this phenomenon. One must therefore look at operating conditions which might sufficiently

relax the prestressing cable to permit significant flexure or tensile loading of the concrete. The following factors deserve attention:

1. Drying shrinkage caused by excessive temperature.

2. Stress concentrations leading to local flexural failure.

3. Excessive pressure overriding the cable prestressing and thereby loading the concrete in tension.

4. Differential thermal expansion locally overriding the cable prestressing and thereby causing local yielding in the cable so that prestressing is not retained when the temperature gradient is removed.

Any of these effects will permanently disable the vessel unless cables can be replaced or retensioned, but the more important consideration is the instantaneous effect when concrete prestressing is lost. The mechanism of failure in the principal stress regions is likely to be, first, a failure of the concrete in tension, followed by flexural failure of the concrete sections. The low flexural and tensile strength of the concrete may have advantages from this aspect. If it can be shown that the concrete bond with the prestressing cable duct is extremely tenacious and that cracks in the concrete do not propagate through the bond between concrete and steel along the circumferential surface of the cable duct, the net effect of the tensile or bending forces will be to cause subdivision of the concrete into smaller sections which will continue to adhere to the cable duct. Openings created by over tensioning the concrete are likely to be cracks that would close as soon as the tensile forces on the prestressing cable were relaxed by release of the internal pressure loading. Experimental work has not yet confirmed that this mechanism of failure will prevent gross rupture of the concrete. Hydraulic overpressure tests have been performed on models in both England and France and, as seen in the case of the General Electric Company-Simon-Carves experiment, do indicate this type of behavior; however, the amount of stored energy in a pneumatic system is very high, as compared with that available in hydraulic tests, and bending loads will be sustained for much longer periods of time after failure. Thus the conclusion regarding the effectiveness of the bond between the concrete and the cable duct in retaining concrete integrity is based partially on conjecture, and further testing is probably warranted.

Because of the failure uncertainties, there is still a school of thought which favors the maintenance of a large safety factor between ultimate load-carrying capability and design stress. The limitations on anchor space and strength capability of the prestressing wire may limit the ability to follow this practice with prestressing cable alone. It is possible to add supplemental reinforcing steel in order to increase the total tensile load-carrying capability of the structural steel; however, the extent to which this practice should be followed is debatable. Reinforcing may be justified and even necessary in stress-concentration areas, but its use in locations where pure membrane stresses exist may create secondary stresses where none previously were present. The most important consideration is to assure that tensile or subsequent flexural loads cannot tear the concrete away from the steel. If the reinforcing steel is more effective than a prestressing steel duct in holding the concrete in place, such a practice may be appropriate. The value of grouted prestressing cable could hinge on this matter.

Temperature Considerations

Concrete structures are capable of limited thermal stress loading. An analysis by Bonsall[8] has shown that a temperature gradient of 87°C will cause sufficient strain to create a stress of 1000 psi in a 7-ft-thick, flat, reinforced-concrete slab. Since this stress level approaches the design value generally accepted as the nominal total allowable stress for concrete structures, the implication is that in prestressed concrete structures the thermal gradient across the load-carrying membrane must be minimized. For gas-cooled reactors, an internal thermal shield has been utilized to remove the nuclear radiation heat load from concrete structures, and thermal insulation has been provided to restrict the heat flow to the concrete from the hot gases. The concrete thermal gradient is further minimized by installing water-cooling coils at the concrete inner surface so that heat flowing through the thermal insulation will not be transmitted through the concrete. A maximum concrete design temperature of 70°C has been fixed by French and British designers for the purpose of assuring minimum thermal stress.

The most important concern in evaluating thermal stresses is a local failure of the concrete that would lead to subsequent relaxation of the prestressing cable. If this condition can be avoided, local thermal stress cracking is of little concern, since the prestressing cable will maintain the compressive loading on the concrete. With this in mind, design advantages might be gained by tolerating some thermal stress cracking. It should be appreciated that concrete, even under the best operating conditions, has a wide distribution of microcracks.[9] Thermal stress cracking of the same type might not have any structural significance.

The current practice in British and French installations for cooling the inner surface of the concrete seems adequate when the temperatures of the coolant are in the range 400 to 500°F. With higher gas temperatures, the demands on the insulation become much more substantial. An alternate arrangement is to use steel reinforcing in the inner concrete to hold it together. The cooling coils can then be embedded several feet from the inner surface so that the concrete can serve as an insulation medium. With this arrangement the thermal stresses at the inner surface of concrete will be rather high but the thermal gradient outboard of the cooling coils will be minimized.

The evaluation of concrete operating temperatures must take account of the influence of temperature on concrete strength. Most work related to the behavior of concrete at elevated temperatures has been performed for the purpose of determining its fire resistance. The compressive strength of concrete as a function of temperature is shown[10] in Fig. 7. Lea and Stradling,[11] showed that Portland cement concretes would retain their strength up to about 300°C and would show only a minor loss of strength up to 500°C. Concretes made from Portland cement were found by Lea and Stradling to disintegrate when exposed to humid air after exposure to temperatures of 300°C and above. Investigations by Saemann and Washa[12] covering the temperature range up to 230°C agree with the results of Lea and Stradling. Livovich[13] compared the behavior of Portland (calcium silicate) cements with that of Refcon (calcium aluminate) cements. He commented on a paper by Wygant and Bulkley,[14] which showed that Portland cement concrete suffered serious loss of strength between 260 and 315°C.

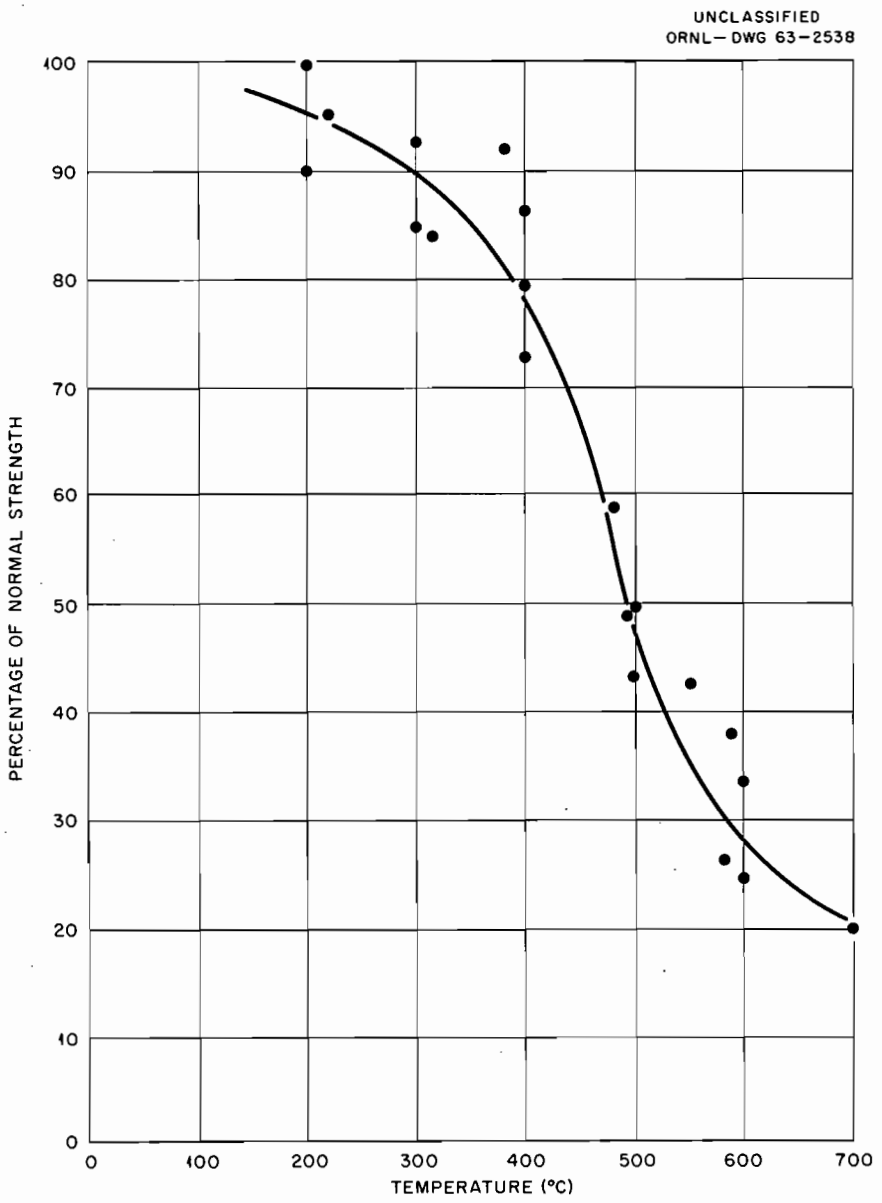

Fig. 7. Temperature-Strength Relationship for Portland Cement Concrete. Mix proportion, 1:3; water-to-cement ratio, 0.5. (Reproduced from ref. 10, "Crown Copyright, reproduced by courtesy of the Controller of Her Brittanic Majesty's Stationery Office.")

He attributed this strength loss to thermal cycling, which created expansive forces through alternate hydration and dehydration of calcium oxide. His tests showed that calcium aluminate cements were resistant to structural deterioration up to 1200°F, and Refcon, the best type tested, had the following compressive strengths after ten thermal cycles of 16 hr heating and 8 hr cooling:

Upper Temperature of Cycle (°F)	Compressive Strength (psi)	
	Portland Cement	Refcon Cement
800	2400	4200
1000	Failed during cycling	2144
1200	Failed during cycling	2138

Livovich reported that "Specimens made with the calcium aluminate cements... exhibited only slight linear changes after cyclic heat treatment and no signs of distress. Modulus of rupture and compressive strengths of these concretes after cyclic heating were found to be satisfactory."

The work of Livovich would indicate that calcium aluminate concretes using crushed firebrick aggregates can survive high-temperature environments. Their long-term high-temperature behavior is not reported, but Livovich's experimental work indicates that the hydrated form of calcium aluminate ($CaO\text{-}Al_2O_3 \cdot 6H_2O$) is less prone to the attrition effects caused by the reversible hydration process than are the calcium silicate concretes.

In order to effectively use the calcium aluminate concrete in prestressed applications, there must be an allowance in the prestressing for its high shrinkage characteristic. About 0.1% shrinkage was seen in Livovich's short period of testing, while the Portland cement concretes grew about 1 to 2%. If the shrinkage of the calcium aluminate concrete continued at this rate, prestressing in the concrete would eventually be lost. It is possible that the shrinkage will reach a saturation point early in the concrete life and will not have a continuing effect on the prestressing, but if this is not the case, designs would have to provide for retensioning periodically to restore the desired level of prestressing.

Perhaps the calcium aluminate concretes will prove more valuable as insulation than as concrete pressure-containing members. Their high-temperature resistance and substantial compressive strength could make them most useful as a means of protecting Portland cements from high-temperature environments, while still providing support for the thin metal membrane which prevents leakage through the concrete structure.

Concrete Vessel Lining

Among concrete reactor vessel designers there is general unanimity that the concrete cannot provide a gas-tight membrane. For gas-cooled reactor applications, an inner lining is provided to act as a gas seal. The lining used at Oldbury is 1/2 in. thick, while the EDF-3 lining is 1 in. thick. These membranes are insufficiently strong to resist the vessel internal pressures and rely upon the concrete for structural support. One technique which might be considered for circumventing the structural limitations of the liner is to precompress it sufficiently to equal the membrane stresses when the vessel is loaded so that under operating conditions the stresses are relieved. With a large-diameter vessel, however, there is no assurance that uniform compression loading can be applied, and local buckling can be expected. British and French practice has been to connect the liner to anchors imbedded on 1- to 2-ft centers in the concrete so that each section of the liner will accept a predetermined amount of strain. Such an arrangement allows for significant strain and possibly some yielding of the steel liner on the assumption that a limited amount of cyclic strain can be permitted without failure. In order for this premise to be accepted, the steel liner must remain ductile, and hence radiation damage to the liner becomes a major design factor. An inner radiation shield of a type similar to the laminated steel-graphite assembly proposed for Oldbury would probably be necessary for radiation damage protection.

The temperature of the liner is an important consideration. If the liner temperature varies greatly from the concrete, the strain from differential thermal expansion and the cycle frequency can greatly exceed that from pressure loading. British and French practices are to attach

the cooling coils directly to the liner so that its temperature approaches the cooling-water temperature and is not greatly different than the concrete temperature. Differential thermal expansion is thereby minimized, while the heat flow through the liner is still diverted from the concrete. For the low-temperature gas conditions of British and French natural-uranium-fueled reactors, the heat losses by this technique are not significant, but it remains to be seen whether this arrangement will be tolerable for gas-cooled reactors operating at higher temperatures.

Design Applications

In discussing the design of prestressed concrete reactor vessels, the EDF-3, Oldbury, and other contemporary designs summarized in Table 2 are pertinent. These designs do not, however, necessarily represent the most fruitful areas for exploration, since they are directed at circumventing the physical size limitations of steel pressure vessels for low-power-density reactors operating at fairly low pressure and temperature conditions, that is, 300 psi and 750°F. For the United States the major realm of interest is in expanding the pressure limits of high-power-density reactors, minimizing space requirements of reactor systems by combining the shield and the pressure envelope, and simplifying manufacturing problems of the pressure envelope. In water-cooled reactors where pressures in excess of 1000 psi are minimum requirements, the pressures must be reconciled with the compressive strength of the concrete, whose nominal design value is in the range of 1000 to 2000 psi. Some type of layer construction permitting graded pressure differentials would be necessary if there were to be any potential for extending the pressure limits of pressurized-water reactors through the use of prestressed concrete. There is some possibility, however, that the size limits of boiling-water reactors, which operate below the upper concrete compression design load limit, could be extended by this type of design.

For gas-cooled reactors, where 500 to 750 psi represents the best working-pressure range, the prestressed concrete pressure vessel provides a means of extending the capacity limit of a single reactor to almost any practical size foreseen in the immediate future. Its value in

Table 2. Pertinent Data on Concrete Vessel Designs

	Reactors G2 and G3 at Marcoule	EDF-3 Reactor	Reference Design of General Electric Company–Simon-Carves Reactor	Oldbury Reactor	Reference Design of Advanced AGR
Shape	Cylindrical with concave heads	Cubical	Cylindrical concave heads	Cylindrical with flat ends	Spherical
Prestressing method	270° wrap anchored to foundations	Culvert arrangement	"Preload"	60° helical wrap, horizontal layers in ends	Hexahedron with cables between buttresses at face edge
Design pressure, psig	200	386	200	350	286
Prestressed concrete thickness, ft	10	16	5	15 (walls) 22 (ends)	8
Inside vessel diameter, ft	46	62.5	47	77	87
Cable size	797 strands of 5-mm wire	61 strands of 1.5-in.-diam single cable	24 strands of 5-mm wire	12 groups of 1/2-in.-diam seven-strand cable	Not specified
Cable tensile strength, psi	~200,000	~250,000	~250,000	~250,000	Not specified
Vessel liner thickness, in.	1	1	Not specified	1/2	Not specified
Liner cooling method	CO_2 at 25°C	Reflective insulation with water coils attached to liner	Not specified	Reflective insulation with water coils attached to liner	Not specified
Concrete temperature limit, °C	70	70	90	70	Not specified

combining all the primary coolant circuitry within a single container without external coolant piping should have important advantages in simplifying reactor construction. The economic incentives are difficult to judge, but installed costs of 50¢ per pound for prestressing steel compared with $1.50 to $4.00 per pound for pressure-vessel steels would indicate that the economic gains could be appreciable.

Research and Development Needs

The fact that two French reactors, G2 and G3, have been in operation at Marcoule for several years is ample evidence that prestressed concrete pressure vessels are practical for reactor systems. The size extensions of the application for the EDF-3 and Oldbury installations are bold advances taken with limited design and experimental background. Since the designs do not depart radically from conventional prestressed concrete practice, there is a high probability of success, but some important questions remain open. These include the following:

1. What influence does creep and shrinkage have on the structural integrity of a large pressure vessel?

2. Can deterioration of the pressure vessel over its operating life be adequately monitored?

3. What limits should be placed on strain cycling of the vessel liner?

4. How far can concrete temperature limits be extended over those currently accepted at British and French installations?

5. How meaningful is the correlation between model performance and full-size vessel behavior? Can analytical techniques be substituted for model studies?

6. How can prestressing wires best be protected against corrosion or other forms of deterioration?

7. Can suitable nondestructive testing techniques be devised to provide a level of confidence in the structure equal to that accepted in steel reactor vessels?

Although some measure of knowledge is available in all of these areas, most of the design practices followed up to now are based mainly on

engineering judgement, and rigorous experimental proof of design adequacy will require either a long period of operating experience or an intensive development program aimed at understanding the fundamental behavior of prestressed concrete structures.

Summary

The aggressive approach of French and British reactor designers toward prestressed concrete reactor vessel design is rather surprising when compared with the cautiousness with which steel reactor vessels are treated in the United States. If the design approach is correct and quality control over fabrication can be exercised adequately, there is little doubt that the low-power-density natural-uranium-fueled gas-cooled reactors will benefit substantially from this innovation. In the United States, where extensions of either design pressure or temperature are the motivating influences on reactor technology, the assessment of the immediate value of prestressed-concrete reactor vessels will require a much better understanding of the structural behavior of concrete. With the recognition of the need for greater unit capacities in reactor systems, boiling-water reactor designers have already found that existing steel pressure vessel technology limits the unit size range, and a comparable limitation will undoubtedly be reached at some capacity level in high-power-density gas-cooled reactors. The use of concrete reactor vessels represents a way of circumventing this size limitation, and concrete vessels should therefore establish a province of their own in the reactor pressure-vessel field.

References

1. I. Davidson, "Some Contributions from Nuclear Power to Engineering Practice," Paper 124, pp. 121-136, Proceedings of the Institute of Civil Engineers, Vol. 17, London, October 1960.
2. J. Bellier and M. Tourasse, "Genie Civil des Caissons," pp. 56-72, Bul. d'Informations, Scientiques et Techniques, No. 20, Geneve, 1958.
3. La Centrale Nucleaire de Chinon, Electricite de France, Direction de l'Equipment, Clamart (Seine), Paris, October 1961.
4. A. L. L. Baker, M. L. A. Moncrief, I. W. Hannah, and Stanley Gill, "The Design, Construction and Testing of a Prestressed Concrete Reactor Pressure Vessel Model," Paper No. 6557, pp. 55-586, Pro. Institution Civil Engrs., Vol. 20, London, December 1961.
5. "Oldbury Design Appraisal," Nucl. Power, pp. 44-50, November 1962.
6. R. V. Moore and J. D. Thorn, "Advanced Gas-Cooled Reactors — an Assessment," Paper No. 1, pp. 3-17, The British Nuclear Energy Society, London, Symposium — The Advanced Gas-Cooled Reactor, March 14, 1963.
7. J. R. Keeton, "Time Dependent Deformations of Plain Concrete," pp. 310-335, Report of the U.S. Naval Civil Engineering Laboratory, Port Hueneme, Calif. Highway Research Board, Vol. 39, 1960.
8. W. Bonsall, "Stresses in Reinforced Concrete Shields for Nuclear Reactors," pp. 128-137, J. Brit. Nuclear Energy Conf., April 1961.
9. M. F. Kaplan, "Crack Propagation and the Fracture of Concrete," J. of American Concrete Institute, 58(5): 591-609 (November 1961).
10. H. L. Malhotra, "Effect of Temperature on the Compressive Strength of Concrete," Mag. of Concrete Research, 8(23): 85-94 (August 1956).
11. F. C. Lea and R. D. Stradling, "The Resistance to Fire of Concrete and Reinforced Concrete," Engineering, 114(2959): 341-344 (Sept. 15, 1922); 114(2960): 341-344 (Sept. 22, 1922).
12. J. C. Saemann and G. W. Washa, "Variation of Mortar and Concrete Properties with Temperature," J. of the Am. Concrete Inst., Vol. 29, No. 5, November 1957; Title No. 54-20, Proceedings, Vol. 54.

13. A. F. Livovich, "Portland vs. Calcium Aluminate Cements in Cyclic Heating Tests," Am. Ceramic Soc. Bull., 40(9): 559-562 (1961).

14. J. F. Wygant and W. L. Bulkley, "Refractory Concrete for Refinery Vessel Linings," Am. Ceramics Soc. Bull., 33(8): 233-239 (1954).

Internal Distribution

1. S. E. Beall
2-11. M. Bender
12. A. L. Boch
13. R. B. Briggs
14. A. P. Fraas
15. W. R. Gall
16. A. E. Goldman
17. B. L. Greenstreet
18. M. I. Lundin
19. R. N. Lyon
20. H. G. MacPherson
21. W. D. Manly
22. A. J. Miller
23. A. M. Perry
24. M. W. Rosenthal
25. G. Samuels
26. H. W. Savage
27. A. W. Savolainen
28. L. R. Shobe
29. M. J. Skinner
30. I. Spiewak
31. J. A. Swartout
32. D. B. Trauger
33. G. D. Whitman
34-35. Central Research Library
36-38. Y-12 Document Reference Section
39-43. Laboratory Records Department
44. Laboratory Records, RC

External Distribution

45. N. R. Droulard, Franklin Institute, Philadelphia, Penn.
46-48. W. Copper, Tennessee Valley Authority
49. Richard Kirkpatrick, Reactor Development Division, AEC, Washington, D.C.
50-64. Division of Technical Information Extension
65. Research and Development Division, ORO
66-67. Reactor Division, ORO