ORNL
MASTER COPY

OAK RIDGE NATIONAL LABORATORY
operated by
UNION CARBIDE CORPORATION
for the
U. S. ATOMIC ENERGY COMMISSION

ORNL - TM - 562

ISOTOPES DEVELOPMENT CENTER

PRODUCTION OF I^{125} AND FABRICATION OF I^{125} X-RAY SOURCES

H. T. Russell

NOTICE

This document contains information of a preliminary nature and was prepared primarily for internal use at the Oak Ridge National Laboratory. It is subject to revision or correction and therefore does not represent a final report. The information is not to be abstracted, reprinted or otherwise given public dissemination without the approval of the ORNL patent branch, Legal and Information Control Department.

LEGAL NOTICE

This report was prepared as an account of Government sponsored work. Neither the United States, nor the Commission, nor any person acting on behalf of the Commission:

A. Makes any warranty or representation, expressed or implied, with respect to the accuracy, completeness, or usefulness of the information contained in this report, or that the use of any information, apparatus, method, or process disclosed in this report may not infringe privately owned rights; or

B. Assumes any liabilities with respect to the use of, or for damages resulting from the use of any information, apparatus, method, or process disclosed in this report.

As used in the above, "person acting on behalf of the Commission" includes any employee or contractor of the Commission, or employee of such contractor, to the extent that such employee or contractor of the Commission, or employee of such contractor prepares, disseminates, or provides access to, any information pursuant to his employment or contract with the Commission, or his employment with such contractor.

ORNL-TM-562

ISOTOPES DEVELOPMENT CENTER

PRODUCTION OF I^{125} AND FABRICATION OF I^{125} X-RAY SOURCES

H. T. Russell

Isotopes Division

DATE ISSUED

JUL 19 1963

OAK RIDGE NATIONAL LABORATORY
Oak Ridge, Tennessee
operated by
UNION CARBIDE CORPORATION
for the
U. S. ATOMIC ENERGY COMMISSION

PRODUCTION OF I^{125} AND FABRICATION OF I^{125} X-RAY SOURCES

H. T. Russell

ABSTRACT

Two 2-curie sources of I^{125} were prepared for use as portable x-ray sources. A procedure for direct recovery of carrier-free I^{125} was also demonstrated.

INTRODUCTION

Availability of high-specific-activity I^{125} makes possible the fabrication of concentrated sources which, in turn, permit satisfactory radiographic applications. This 57.4-day radionuclide decays by electron capture, emitting a 27-kev x ray and a 35-kev gamma ray. Although I^{125} can be produced in a cyclotron by the nuclear reactions $Te^{125}(p,n)I^{125}$, $Te^{124}(d,n)I^{125}$, and $Te^{125}(d,2n)I^{125}$, it is produced more efficiently in a reactor by the reaction

$$Xe^{124}(n,\gamma)Xe^{125} \xrightarrow[18\ hr]{EC} I^{125}.$$

The cross-section for the xenon reaction is estimated at 74 barns.

The reactor method for the production of carrier-free I^{125} and x-ray sources using I^{125} was developed to meet the increasing demand in industrial and medical research. The x-ray sources were produced to demonstrate the feasibility of using a lightweight portable I^{125} x-ray machine in the laboratory, in the field, in the operating room, or wherever else needed for radiography.

PROCEDURE

Production and Separation of Iodine-125

A 425-cc sample (STP) of normal xenon gas (~0.1% Xe^{124}) was compressed in an aluminum can at about 100 psi and irradiated for 21 days in the ORR at a flux of 2×10^{14} n/cm^2·sec to produce 2500 mc of I^{125}.

Chemical processing was done in a manipulator cell, using a tubing cutter to open the aluminum irradiation can and an all-glass distillation system for the I^{125} purification. The I^{125} produced during the irradiation was removed from the walls of the aluminum can with 0.1 N NaOH solution. Then, in order to remove the active iodine from the NaOH solution, a slight excess of 1 N $KMnO_4$ was added to oxidize the iodide to iodate and sufficient H_2SO_4 was added to neutralize the NaOH and to make the solution definitely acid. Additional permanganate was added as necessary to maintain a purple color.

This solution was heated to boiling and saturated H_3PO_3 was added by drops to reduce excess $KMnO_4$ and to reduce the iodate to elemental iodine. A few drops of 30% H_2O_2 was then added, and the iodine distilled and trapped in weak NaOH solution. Distillation was continued until about 10% of the original volume had been distilled.

The I^{125} activity was confirmed by its gamma-ray spectrum and by identification of its 57.4-day half-life.

Fabrication of the Iodine-125 Sources

Two sources, each of 2 curies, were prepared for study and evaluation by ORNL personnel and by medical and industrial groups. The first source was fabricated behind viewing windows in a hood. Two curies of I^{125} and 0.5 mg of normal I^{127} were precipitated together as silver iodide; the dried salt was sealed by welding in a stainless steel capsule (Fig. 1) having a 1-mil-thick 2-mm-diam stainless steel window. The radiation through the window of this source was 55 r/hr at 3 in. from the center of the source as determined by a thin-wall ionization chamber.

The second source was fabricated in a manipulator cell to develop a technique for in-cell fabrication of x-ray sources having small physical dimensions. Two curies of carrier-free I^{125} was prepared as NaI in about 0.1 ml of 0.001 N NaOH solution by distillation of elemental I^{125} into about 1 ml of 0.0001 N NaOH solution and subsequent evaporation. The highly concentrated NaI^{125} solution was then evaporated to dryness in an aluminum cup 0.090 in. ID x 0.070 in. deep, having an overall diam of 0.095 in. A hypodermic needle mounted on a ball-and-pinion rack with controls outside the cell was used for transferring the highly concentrated NaI^{125} solution into the cup. The cup containing the dried NaI^{125} was sealed by welding in an aluminum capsule 0.375 in. long by 0.140 in. diam and having a 0.010-in.-thick aluminum window. The volume of the cavity inside the cup was ~0.01 cm^3. The radiation reading from this source was 110 r/hr at 3 in. from the center, measured with a thin-wall ionization chamber. This capsule was sealed in a modified GMR Model 107 source holder* made of type 1100 aluminum with an inside diam of 0.146 in. and a length of 0.480 in. Figure 2 shows the source positioned in the holder. The wall thickness on sides and bottom was 0.020 in. The capsule was sealed by seating a brass screw on an aluminum shoulder and screwing a stainless steel cap in place over the brass screw. Smear tests made on the source holder indicated no radiocontamination. The radiation from the I^{125} source assembly was 50 r/hr at 3 in. from the center of the source.

The holder was placed in a GMR Model 110 radiographic exposure device (Fig. 2), approved by the Bureau of Explosives as a shipping container and by the AEC for use as the exposure device as well as for storage of the source. The 5-mil-thick stainless steel window in the radiographic

*Provided by General Motors Corporation Research Laboratories.

UNCLASSIFIED
ORNL DWG. 63-1661

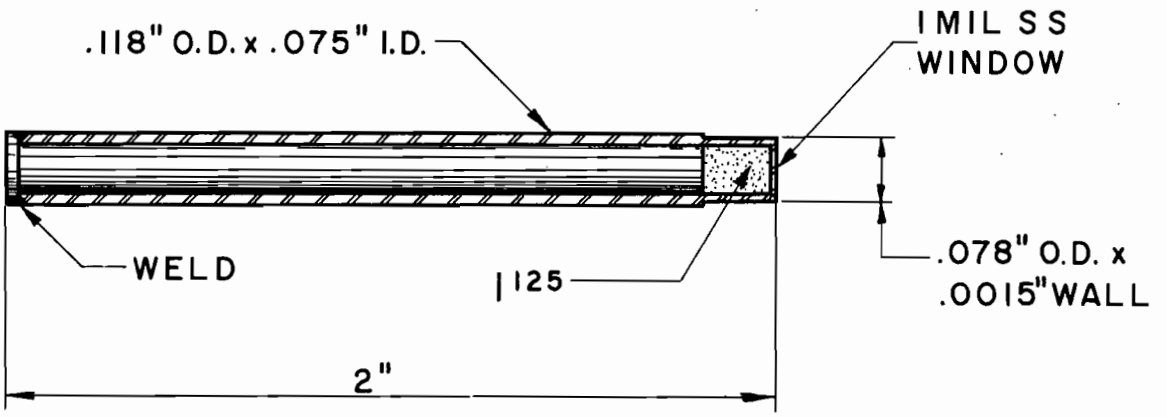

Fig. 1. Stainless Steel Capsule.

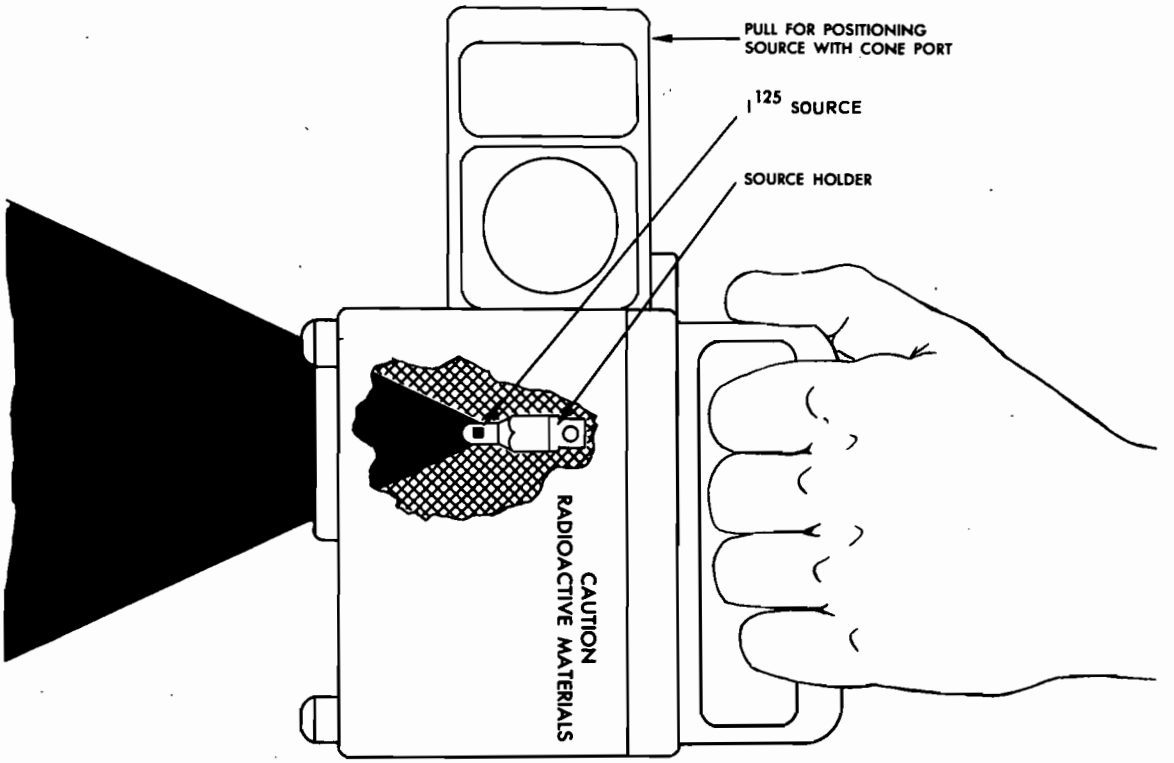

18 POUND PORTABLE RADIATION PROJECTOR UNIT

Fig. 2. 18-Pound Portable Radiation Projector Unit.

exposure device reduced the radiation reading to 4 r/hr at 5 in. Radiographs were made with both Polaroid 3000X film and Kodak Royal Blue x-ray film. For example, the radiograph shown in Fig. 3 was made using a cassette loaded with Polaroid 3000X film with an exposure time of 3 min at a distance of 13 in. The total time required to make this film, including the developing, was less than 5 min.

Direct Recovery and Trapping of I^{125} from Xenon Can

A method for the direct recovery of elemental I^{125} from the xenon irradiation can and simultaneous concentration in a "point source" without added carrier has also been demonstrated. An irradiation can similar to those used above was heated to 660°C under vacuum by inductive heating and the iodine thus released from the can was adsorbed on a 1-mm-diam by 1-mm-thick charcoal disk. The system is shown in Fig. 4. The iodine not adsorbed during the first pass through the disk was collected in cold trap B by closing Valve 2. Valve 1 was then closed and the iodine was passed back through the carbon disk by cooling A and warming B. The alternate cooling and warming of traps A and B was repeated until all the I^{125} was adsorbed on the carbon disk. The disk was then welded closed in a stainless steel capsule similar to the one shown in Fig. 3.

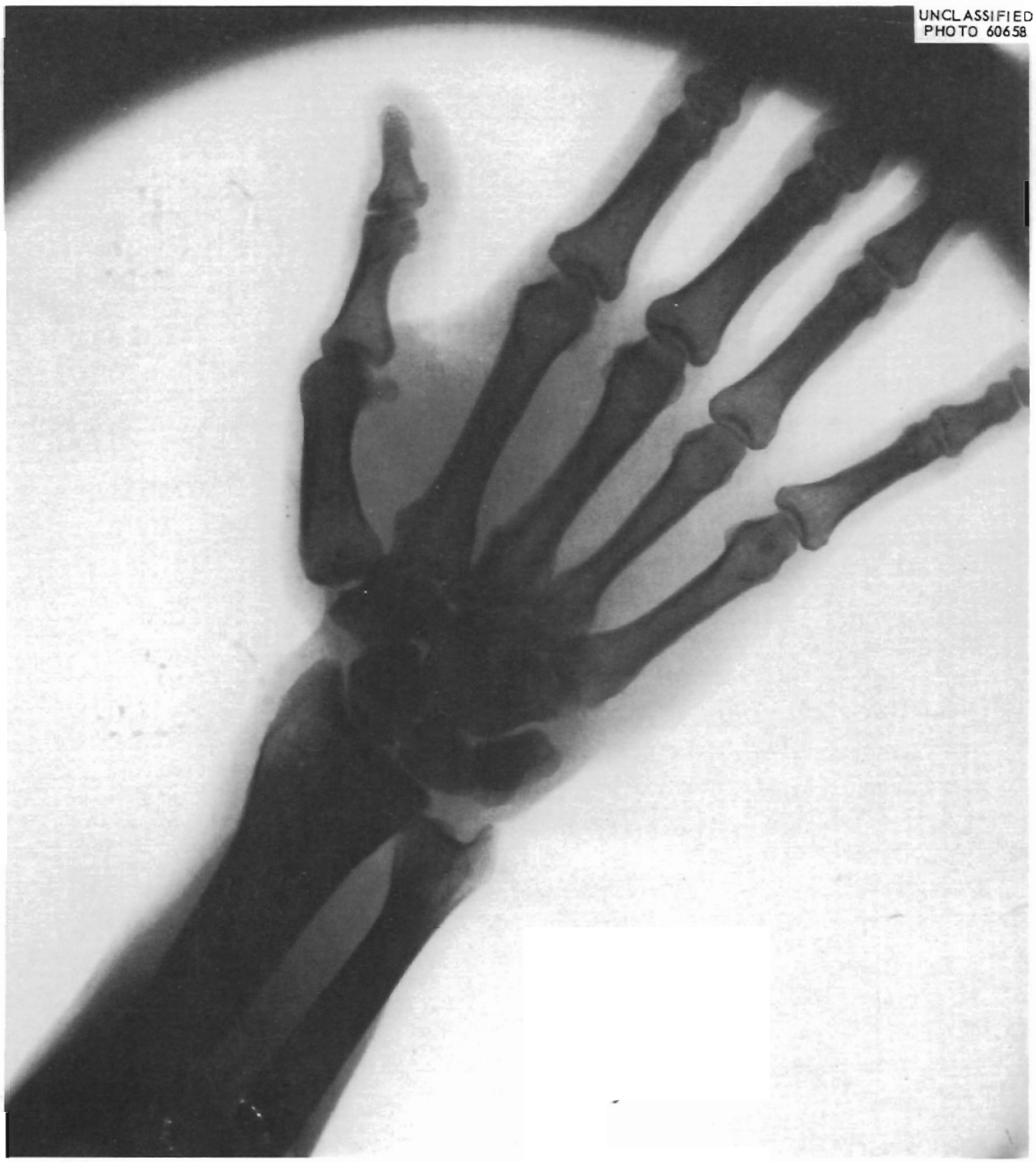

Fig. 3. Radiograph of Hand, Using I^{125}.

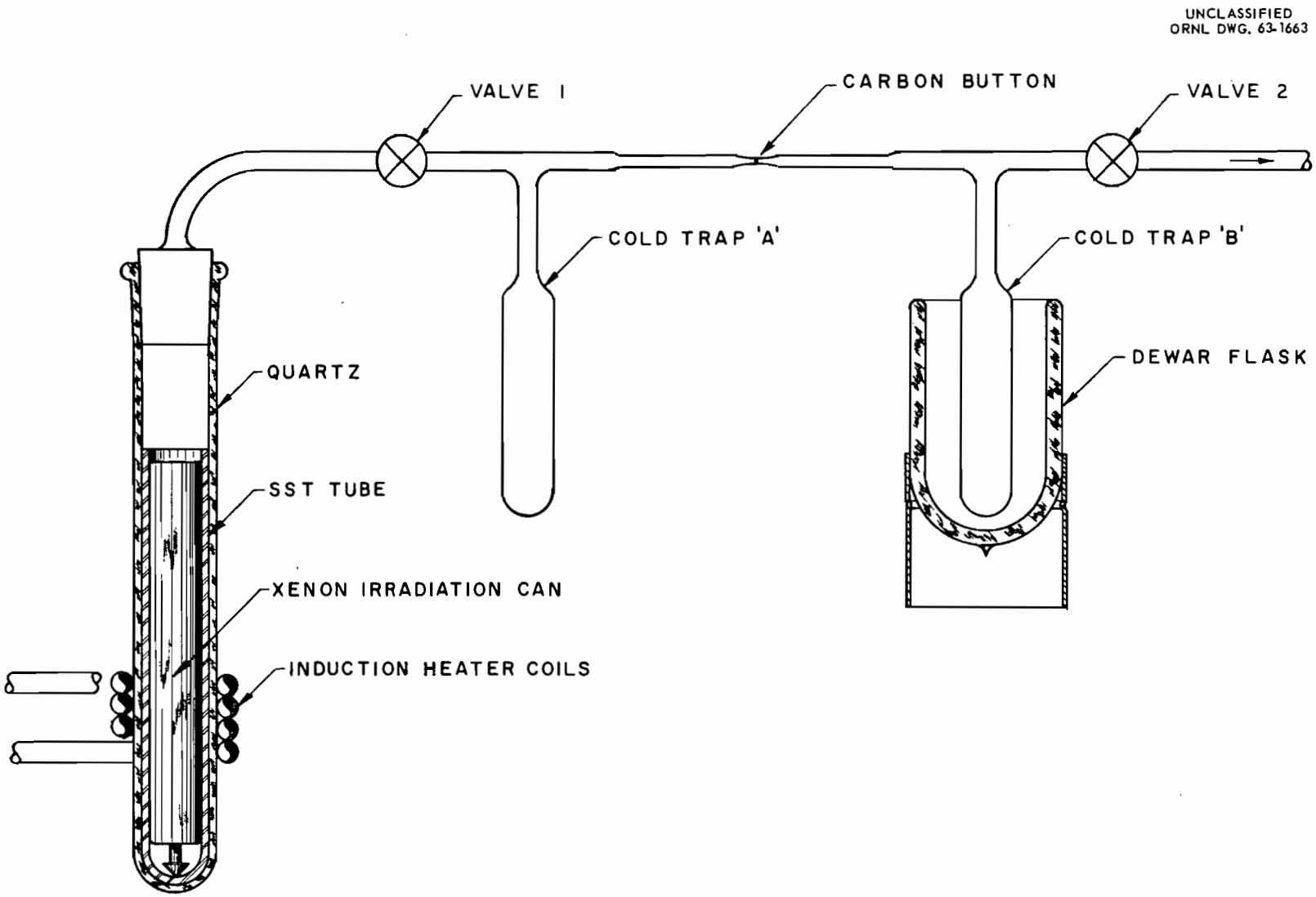

Fig. 4. Apparatus for Direct Collection of I^{125} on Carbon Button.

INTERNAL DISTRIBUTION

1. E. H. Acree
2-6. P. S. Baker
7. E. E. Beauchamp
8. G. E. Boyd
9. T. A. Butler
10. F. N. Case
11. J. A. Cox
12. F. L. Culler
13. J. H. Gillette
14. M. T. Kelley
15. E. H. Kobisk
16. E. Lamb
17. T. A. Lincoln
18. L. O. Love
19. H. A. O'Brien
20. R. A. Robinson
21. A. F. Rupp
22-31. H. T. Russell
32. H. E. Seagren
33. M. J. Skinner
34. J. M. Sullivan
35. E. H. Taylor
36. Laboratory Records (RC)
37-38. Central Research Library
39-41. Laboratory Records
42-43. Document Reference Section

EXTERNAL DISTRIBUTION

44. P. C. Aebersold, Div. of Isotopes Development, AEC, Washington, D.C.
45. A. Berman, Div. of Isotopes Development, AEC, Washington, D. C.
46. O. M. Bizzell, Div. of Isotopes Development, AEC, Washington, D. C.
47-49. E. E. Fowler, Div. of Isotopes Development, AEC, Washington, D. C.
50. J. W. Irvine, MIT, 6-426, Cambridge 39, Mass.
51. J. E. Machurek, Div. of Isotopes Development, AEC, Washington, D. C.
52. W. G. Myers, University Hospital, The Ohio State University, 410 West 10th Avenue, Columbus 10, Ohio
53. G. L. Rogosa, Division of Research, AEC, Washington, D. C.
54. G. J. Rotariu, Div. of Isotopes Development, AEC, Washington, D. C.
55. H. M. Roth, Research and Development Division, AEC, ORO
56. B. L. Wood, Div. of Isotopes Development, AEC, Washington, D. C.
57-71. DTIE, AEC, ORO
72. Research and Development Division, AEC, ORO