ORNL 28

[redacted] MASTER COPY

OAK RIDGE NATIONAL LABORATORY

operated by

UNION CARBIDE CORPORATION

for the

U. S. ATOMIC ENERGY COMMISSION

UNION CARBIDE

ORNL - TM - 509

COPY NO. -

DATE - 2/20/63

CLASSIFICATION CANCELLED
ADD Signature ORNL Date 7/15/2009
Single review of CCRP-declassified documents
was authorized by DOE Office of
Declassification memo of August 22, 1994.

ROVER REPORT FOR DECEMBER 1962-JANUARY 1963

F. L. Culler, Jr.

INTERNAL DISTRIBUTION

1. R. E. Blanco
2. J. C. Bresee
3. K. B. Brown
4. G. I. Cathers
5. F. L. Culler
6. D. E. Ferguson
7. L. M. Ferris
8. B. C. Finney
9. H. E. Goeller
10. B. A. Hannaford
11. R. W. Horton
12. F. G. Kitts
13. L. E. McNeese
14. E. L. Nicholson
15. A. D. Ryon
16. W. F. Schaffer
17. C. D. Scott
18. J. W. Ullmann
19. C. D. Watson
20. M. E. Whatley
21. H. B. Whetsel

22-23. Central Research Library
24. Document Reference Section
25-27. Laboratory Records
28. Laboratory Records (RC)

EXTERNAL DISTRIBUTION

29. E. L. Anderson, Jr., Washington AEC
30. R. D. Baker, LASL
31. L. C. Corrington, SNPO (Cleveland)
32. D. C. Davis, ORO
33. L. P. Hatch, BNL
34. G. B. Marrow, Y-12
35. J. P. McBride, ICPP
36. W. S. Scheib, Washington AEC
37. J. L. Schwennesen, Washington AEC
38. S. H. Smiley, ORGDP
39. G. Strickland, BNL

40-54. DTIE

55. Research and Development Division, ORO

CLASSIFICATION CANCELLED
authority of Morehead Doc 4473
DATE AUG 24 1973
H F McDuffie
CLASSIFICATION OFFICER
OAK RIDGE NATIONAL LABORATORY
AUTHORITY DELEGATED BY AEC 74971
8/17/73

[redacted]

NOTICE

This document contains information of a preliminary nature and was prepared primarily for internal use at the Oak Ridge National Laboratory. It is subject to revision or correction and therefore does not represent a final report. The information is not to be abstracted, reprinted or otherwise given public dissemination without the approval of the ORNL patent branch, Legal and Information Control Department.

[redacted]

LEGAL NOTICE

This report was prepared as an account of Government sponsored work. Neither the United States, nor the Commission, nor any person acting on behalf of the Commission:

A. Makes any warranty or representation, expressed or implied, with respect to the accuracy, completeness, or usefulness of the information contained in this report, or that the use of any information, apparatus, method, or process disclosed in this report may not infringe privately owned rights; or

B. Assumes any liabilities with respect to the use of, or for damages resulting from the use of any information, apparatus, method, or process disclosed in this report.

As used in the above, "person acting on behalf of the Commission" includes any employee or contractor of the Commission, or employee of such contractor, to the extent that such employee or contractor of the Commission, or employee of such contractor prepares, disseminates, or provides access to, any information pursuant to his employment or contract with the Commission, or his employment with such contractor.

CONTENTS

Page

Abstract 5

1. Introduction 6

1.1 Brief Survey of the Problem and the Research 6

1.2 Status and Evaluation of the Efforts 8

2. Aqueous Processes for Recovery of Uranium from Rover Combustion Ash 12

2.1 Studies on the Volatility of Fission Products During Combustion of Irradiated Rover Fuel 12

2.2 Development of the Deline-Burn-Dissolve (DBD) Process . . . 12

2.3 Development of the Burn-Dissolve Process 14

2.4 Development of the Burn-Leach Process 14

2.5 Corrosion Tests Relation to the Deline-Burn-Dissolve Process 17

3. Chlorination and Chloride Volatility Studies on the Recovery of Uranium from Rover Fuel Combustion Ash 18

3.1 Chloride Volatility Studies 18

4. Recovery of Uranium from Spent Rover Fuel by the Combustion-Fluorination Process 21

4.1 Introduction 21

4.2 Status of Development 21

4.3 Current Experimental Work 22

4.3.1 Combustion of Fuel Rods 22

4.3.2 Fluorination of Oxide Residue 26

4.3.3 Breaking and Packing Tests on Graphite Rods 31

4.3 Conclusions 35

4.4 Temperature Limits for the Off-Gas Filter of the Reactor . 36

4.5 Hazards Review of the Combustion-Fluorination Facility, Building 3503 36

4.6 New Combustion-Fluorination Reactor: Design Calculations . 38

CONTENTS (Cont'd.)

Page

5. Laboratory Studies in Support of the Combustion-Fluorination Process 39

5.1 High-Temperature Reactions Between Nb_2O_5 and Fluorides in Postfluorination Ash 39

5.2 Densification or Melting of Ash During Combustion of Rover Fuel 40

5.3 Fluorination Characteristics of First-Cycle Ash from the New Nickel Reactor 41

ABSTRACT

Laboratory-scale and engineering efforts to recover the uranium (and possibly the niobium) from spent Rover fuel elements are reported, and the status of each aspect of the work is presented in the report, along with the evaluations.

In essence, the fuel element is first oxidized to remove the graphite, leaving an ash that contains principally the oxides of uranium and niobium. That is the basis of the main effort, the Combustion-Fluorination Process. However, there are alternatives, and the fates and paths of the uranium, the niobium, and the fission products are accordingly different.

The laboratory- and engineering-scale work reported was directed toward the several approaches to the problem of recovering the uranium from the combustion ash (combustion is a necessary step in the processes under study) and separating it from the niobium and the fission products, with the possibility of also recovering the niobium.

The Combustion-Fluorination Process represents the main effort and is in the engineering-test stage. The uranium is recovered as UF_6. Alternatives include (1) the chlorination of the combustion ash to form volatile chlorides of uranium and niobium, which are separable, and (2) the aqueous dissolution of the ash in order to prepare solutions for recovery of the uranium by solvent extraction. There are several variants of the aqueous route, and they include the Deline-Burn-Dissolve Process, the Burn-Dissolve Process, and the Burn-Leach Process.

The Chloride Volatility Process has reached the large-scale laboratory stage, the the Deline-Burn-Dissolve Process has reached the point of engineering-scale work. The Burn-Dissolve and Burn-Leach Processes were recently introduced.

Auxiliary studies (hazards, supporting technical work, etc.) are also reported.

1. INTRODUCTION

1.1 Brief Survey of the Problem and the Research

The studies are being made in order to develop an efficient and economical process for the recovery of uranium from spent Rover fuel, which consists of uranium carbide (coated with pyrolytic carbon) dispersed in graphite, with niobium carbide liners in the coolant channels. The burnup of the elements will be low, and they will not be excessively radioactive. The problems derive principally from the pyrolytic-carbon coating on the uranium carbide spheres and from the niobium carbide liners for the coolant channels.

The coating is very resistant to chemical attack, and a preliminary step in the process necessarily is the removal of the coating, whether or not this step is to be followed by fluorination, chlorination, or aqueous processing. This first step is conveniently done by simple combustion, which also includes the advantage of removing the bulk of the fuel element (the graphite moderator) as carbon dioxide. Then, the ash (oxides of uranium, niobium, and nonvolatile fission products) may be fluorinated, chlorinated, or treated by an aqueous mixture of hydrofluoric and nitric acids in order to recover the uranium. It may even be possible to eliminate hydrofluoric acid, according to a recently introduced variant of the aqueous-processing route. The combustion step, on the other hand, may or may not result in sintered oxides of uranium and niobium, depending on the controllability of the temperature, and dense sinters may make other steps in the recovery more difficult to take. As stated above, the niobium carbide liners and the pyrolytic-carbon coatings on the fuel spheres are presenting the most difficult problems and consequently requiring the most attention, whatever the approach.

The main effort is the Combustion-Fluorination Process, which essentially consists in burning the element in oxygen in order to produce a combustion ash, and then fluorinating the ash in order to separate the uranium (as the volatile hexafluoride) from the fluorides of niobium

and the fission products. Some of the fission products are also volatile, as is niobium fluoride, but, due to their physical properties, they can be separated from the uranium by adsorption on beds of sodium fluoride, for example. The Combustion-Fluorination Process is in the pilot-plant stage of development.

The alternative methods for recovering the uranium from the combustion ash are the aqueous nitric-hydrofluoric acid process and the liquid- or gas-phase chlorination processes and their variants. According to the aqueous route, it may be possible to circumvent the sintering of the niobium pentoxide by first dissolving the liners from the elements in order to prevent the appearance of niobium oxide in the combustion ash, thereby improving the process whether the postcombustion steps follow an aqueous or a gaseous route. That recent development is called the Deline-Burn-Dissolve (DBD) Process and has advanced to the point of a pilot-plant study. In this report, two variations of the DBD Process are introduced: the Burn-Dissolve and the Burn-Leach Processes. The Burn-Leach Process, should it be workable, offers the advantage of eliminating hydrofluoric acid from the aqueous processing.

The other alternative to the Combustion-Fluorination Process is one that basically involves the liquid-phase, low-temperature chlorination of the combustion ash with hexachloropropene (HCP), or high-temperature, gas-phase chlorination, plus the useful variants that may develop as the study advances. Liquid- or gas-phase chlorination have so far shown themselves worthy of study because early corrosion results indicate that the nickel reactor will not be attacked severely. Gas-phase chlorination is very similar in many important respects to the fluorination method, but liquid-phase chlorination with HCP has special advantages. For example, it is run at low temperature (below 200°C), and the product is readily adaptable to extraction by tributyl phosphate--Amsco mixtures. On the other hand, gas-phase chlorination may offer promise as a method not only for separating the uranium in bulk but for purifying it, though this has yet to be demonstrated. The gas-phase work is done in an apparatus called the "Torrefactor."

Laboratory work in support of the Combustion-Fluorination and the Deline-Burn-Dissolve processes are continuing to help identify and solve problems as they arise.

1.2 Status and Evaluation of the Efforts

Studies on the Volatility of Fission Products from Burning Rover Fuel. Since the fuel will have to be burned no matter what procedure is used to recover the uranium, the temperature dependence of the volatility of the fission products (as oxides, probably) needs to be understood. More certain knowledge of the effectiveness of micrometallic and absolute filters is also required in order to ensure that the volatile fission products will be stopped effectively. Currently, a platinum-wound furnace (1400 to 1600°C) is being built, filter holders are being constructed, and experiments are being designed. Tests with irradiated fuel are scheduled for about March 1963.

Development of the Deline-Burn-Dissolve (DBD) Process. The DBD process involves the dissolution of the NbC liners of the Rover fuel elements in HF-HNO_3 solution, washing the delined fuel element, burning it, and dissolving the U_3O_8 ash in boiling nitric acid. Optimum delining conditions are still being determined. The most recent observations indicate that in solutions containing at least 2 M HNO_3, under appropriate heat-transfer conditions, Rover fuel can be delined in a simple vessel which will not require a heater.

Development of the Burn-Dissolve Process. This process involves burning the fuel and dissolving the U_3O_8-Nb_2O_5 ash in boiling mixtures of hydrofluoric and nitric acids. It differs from the DBD process discussed above in that there is no delining step, and, consequently, both niobium and uranium oxide appear in the ash. Work during this reporting period showed that the semicontinuous dissolution of Kiwi B1A fuel in boiling 4 M HNO_3--1 M HF (five cycles of 4 hr each) yielded a product solution that was probably acceptable as feed for a tributyl phosphate solvent extraction step.

Development of the Burn-Leach Process. This process involves burning of beaded fuel at controlled temperature in stainless steel equipment, followed by recovery of uranium by leaching the ash with nitric acid alone. This procedure differs from the other two discussed above in that if it should be workable no hydrofluoric acid will be required at all, thereby avoiding the corrosion problems introduced by its use. Because of the favorable results from a single experiment, further tests of this alternative procedure will be made. The product solution contained only 0.05% of the niobium, and only 0.6% of the uranium was found in the niobium oxide residue.

Corrosion Tests Relating to the Deline-Burn-Dissolve Process. In preliminary tests to determine the corrodibility of container materials for the combustion step of the process, a number of metals were tested. Simulated conditions and operations were used, and the corrosion rates were as follows: type 304L stainless steel, 14.5 to 19.6 mils/month for nine cycles (800°C, oxygen, 5 hr, followed by digestion of the ash in 5 M HNO_3 for 2.5 hr); Carpenter 20, 0.36 to 1.69 mils/month for seven cycles; Haynes 25, 0.85 to 2.06 mils/month; and Corronel 230, less than 0.1 mil/month for 11 cycles. Type 304L stainless steel showed grain boundary attack, and "A" nickel was attacked much more rapidly than any of the alloys.

Chloride Volatility Studies. Three runs involving burning of Rover fuel in oxygen, chlorinating the ash with 15% CCl_4--85% Cl_2, and separating the $NbCl_5$ with argon, have been completed in the Torrefactor. The main concern was with the operability of the Torrefactor, but, in general, the burning and chlorination steps proceeded better than predicted according to laboratory studies, while product collection and separation did not fare as well.

In all three runs (a whole Rover fuel rod was used in the third one), burning was complete in 2 hr or less, in contrast to almost 4 hr in smaller-scale work. Moreover, the ash did not sinter or melt. The good combustion rate was attributed to the performance of the reagent inlet tube, which distributed the oxygen along the entire rod so that the complete surface burned uniformly.

Recovery of Uranium from Spent Rover Fuel by the Combustion-Fluorination Process. A batch of 58 fuel rods 27 in. long and weighing 16,700 g, containing 2570 g of uranium, was burned in the five-zone, large-scale (5-in.-diam) reactor in 15 hr. The oxide residue was fluorinated in 4 hr 12 min of total fluorine flow. According to this first run, it is concluded (1) that the equipment can be operated at almost twice the rate used in this experiment, with heating the wall of the reactor and without unusual problems related to the filter or the control of the carbon monoxide. There would be some fusion or slagging along the center line of the reactor, but the effect on fluorination time would not be great. (2) Combustion times of about 8 hr, coupled with a fluorination time of 4 hr, indicate a maximum capacity of about 5 kg of uranium per 24 hr for a 5-in.-diam cylindrical reactor. Therefore, five or six units in parallel would be required to meet the stipulated rate of 20 kg of uranium per 24 hr for a production plant. Since it is felt that a reactor of greater capacity is required, a slab-geometry vessel is being designed. The criticality factor operates against the use of high-capacity cylindrical units. (3) Fluorination in the large reactor can be done at rates comparable to those for smaller-scale work, and, in the absence of large fused masses of oxide, complete fluorination can be achieved in 3 hr or less. (4) Current information is insufficient to permit evaluation of the condensing-distilling separations system. It appears to be operable, but the amount of niobium passed overhead and the uranium holdup are the decisive and not yet predictable factors. (5) Fuel rods can be broken for charging to a reactor; the mechanical principles are well outlined and easily reducible to practice. Moreover, the amount of fines produced will not be excessive. (6) Rods that have been broken into right cylinders can be charged to either a slab or cylindrical reactor without concern about voids or low-density loadings.

Temperature Limits for the Off-Gas Filter of the Reactor. The results are encouraging for achieving a long useful life for the off-gas filter. A series of cyclic oxidation-fluorination exposure tests of candidate filters was conducted by the ORGDP Engineering Development Department. High- and low-purity porous alumina, nickel and Monel Yorkmesh, nickel

Rigimesh, nickel, and Monel sinters were tested. The exposures were to pure oxygen and pure fluorine (alternately) for 4 hr at 600°F. The samples were cooled to 100°C between exposure to the gases and then were weighed after 11 and after 24 cycles. The alumina filters were rejected because of weight losses; the others had slight weight gains, and their appearance after the tests was good. According to the slight weight gains and good appearance, it was concluded that there would be little plugging as a result of loading the pores with corrosion products.

Hazards Review of the Combustion-Fluorination Facility, Building 3503. The exhaust from the spray tower was connected to the plant-vessel off-gas system, and a fluorine detector was installed to monitor the cell-ventilation air.

New Combustion-Fluorination Reactor: Design Calculations. Design calculations were completed for the heat transfer problems associated with the proposed new slab reactor. Detailed structural calculations were almost complete, and detailed design of the reactor had started at the end of the period. All materials, except for the electrical heaters, are on hand, and fabrication will start early in February in the ORNL shop.

The slab is 4 ft high by 2 ft long and is 2-1/2 in. in inside width. A 3-ft fuel bed is used, instead of the previous 4-ft depth, to minimize the amount of fuel consumed per run. The capacity of the slab is 60 full-length fuel rods chopped into 3/4-in.-long pieces.

Laboratory Studies in Support of the Combustion-Fluorination Process. Along with previous results, there is now further evidence that in an operation that involves recycle of excessive postfluorination ash there is a strong possibility that niobium and uranium oxyfluorides will volatilize from the ash and possibly plug the lines and filters. Moreover, low niobium and uranium conversions may also result. In recent tests with an intimately ground 1:1 mixture of Nb_2O_5 and synthetic ash (98.7% NiF_2 and 1.3% FeF_2), 50.9% of the niobium volatilized at 785°C, the result of the fluorinating potential of NiF_2 and FeF_2.

Densification or Melting of Ash During Combustion of Rover Fuel. A sample of the ash from the first cycle in the new nickel reactor (RO-1) melted at 1475°C and flowed freely at 1525°C. It contained less than 0.5% of metal impurities.

Fluorination Characteristics of First-Cycle Ash from the New Nickel Reactor. A pellet quenched from RO-1 ash melt was used. It fluorinated rapidly and completely, below 450°C. Microscopy of the solid ash prepared by rapidly cooling a melted ash showed characteristics (much reaction surface) favorable to fluorination.

2. AQUEOUS PROCESSES FOR RECOVERY OF URANIUM FROM ROVER FUEL COMBUSTION ASH

2.1 Studies on the Volatility of Fission Products During Combustion of Irradiated Rover Fuel

Preparations are being made to study the volatility of fission products as a function of temperature during the combustion of Rover fuel. In addition, the effectiveness of micrometallic and absolute filters in removing ruthenium oxides and other radioactive particles from the off-gas stream will be tested. Irradiated fuel specimens for this work are available from previous Kiwi reactor tests and will not contain coated fuel particles. This study will probably be made in the low-level manipulator cell in Building 4505. Presently, the effort is being devoted to construction of the platinum-wound furnace necessary for attaining the desired temperatures of 1400 to 1600°C, to designing and constructing the filter holders, and, in general, to planning the series of experiments. Experiments with irradiated fuel are scheduled for March 1963.

2.2 Development of the Deline-Burn-Dissolve (DBD) Process

This process involves the dissolution of the NbC liners in HF-HNO_3 solution, washing the delined fuel, burning the washed fuel, and dissolving the U_3O_8 ash in boiling nitric acid. Optimum delining conditions are still being determined.

Preliminary experiments[1] indicated that the delining operation could be conducted at room temperature. However, in more careful experiments, it was found that the reaction was actually highly exothermic and that the nitric acid concentration in the dissolvent was a critical factor. To illustrate these effects, a series of delining experiments was conducted with 5 M HF solutions (F/Nb mole ratio of 10) containing up to 5 M HNO_3. Each experiment was started at room temperature, and the temperature increase if any, and the amount of NbC dissolves were determined over a 6-hr reaction period. The solution that contained only 1 M HNO_3 dissolved only about 20% of the NbC, with an attendant temperature increase of only 3°C (Table 1). However, in solutions containing 2 to 5 M HNO_3, at least 99.9% of the NbC was dissolved, and the temperature increased (during the first hour) to a maximum of 55 to 70°C (Table 1). These results, although still preliminary, indicate that in solutions containing at least 2 M HNO_3 under appropriate heat-transfer conditions Rover fuel can be delined in a simple vessel which will not require a heater.

Table 1. Amounts of NbC Dissolved and Temperature Increase During Delining of Kiwi-B1A Fuel with 5 M HF Containing Ntiric Acid, Starting Each Experiment at Room Temperature

Conditions: Reaction time, 6 hr
F/Nb mole ratio, 10

Run No.	HNO_3 Conc. (M)	Δt (°C)	Amount of NbC Remaining in Fuel (%)
50	1	26-29	79.4
51	2	27-70	0.08
52	3	26-55	0.10
53	5	26-67	0.07

[1] F. L. Culler, Rover Report for October 1962, ORNL-TM-426 (Nov. 28, 1962).

2.3 Development of the Burn-Dissolve Process

The Burn-Dissolve Process involves burning of the fuel followed by dissolution of the U_3O_8-Nb_2O_5 ash in boiling HF-HNO_3 solutions. It is different from the DBD process discussed above in that the fuel is not delined, and, as a consequence, both niobium and uranium oxides appear in the ash. In prior work it was shown that a F/Nb mole ratio of at least 60 was necessary to ensure complete dissolution of the ash in less than 24 hr. In an effort to dissolve typical combustion ash using a much lower overall F/Nb mole ratio, a series of 4-hr experiments were conducted in which samples of ash were dissolved in boiling 4 M HNO_3--1 M HF on a semicontinuous basis. At the end of each 4-hr cycle, the product solution was replaced by a fresh volume of reagent, and another 3.45-g charge of ash was added to the dissolver. The build-up of insoluble material (i.e., the "heel") and the concentrations in the product solution were determined over five cycles. The F/Nb mole ratio was 10 in the first cycle but decreased to about 3 over the five cycles. The uranium concentration in the product solution was relatively constant at about 0.055 M over the five cycles, but the niobium concentration increased regularly from 0.05 to 0.08 M (Table 2). Since the nitric and hydrofluoric acid concentrations did not change appreciably during the dissolutions, each product solution was probably acceptable as a feed for tributyl phosphate solvent extraction.

The amount of insoluble material (which was becoming increasingly rich in niobium) increased at a steady rate over the five cycles (Fig. 1). Nevertheless, a semicontinuous dissolution procedure probably would require much less hydrofluoric acid than successive batch-total dissolutions since the "heel" could be allowed to accumulate over many cycles before its complete dissolution would be necessary.

2.4 Development of the Burn-Leach Process

This process involves burning of the fuel at controlled temperatures in stainless steel equipment, followed by recovery of the uranium by leaching the ash with nitric acid alone. This process differs from the other two discussed above in that if it should be workable, no fluoride

Table 2. Semicontinuous Dissolution of Kiwi-B1A Combustion Ash in Boiling 4 M HNO_3--1 M HF

Conditions: Ash composition: 46.3% U; 25.8% Nb
Duration of each cycle: 4 hr
Product solution replaced by fresh dissolvent and 3.45 g of ash added at end of each cycle
F/Nb mole ratio: 10 in first cycle but decreased to about 3 over the five cycles

Cycle	Fate of Ash		Concentrations of U and Nb in Product Solution		F/Nb Mole Ratio in Solution
	Dissolved (%)	Wt. of Residue (g)	Uranium	Niobium	
1	61.6	1.32	0.054	0.053	18.9
2	51.2	2.33	0.054	0.067	14.9
3	44.0	3.23	0.053	0.061	16.4
4	37.7	4.16	0.056	0.072	13.9
5	36.8	4.81	0.058	0.076	13.2

CONFIDENTIAL

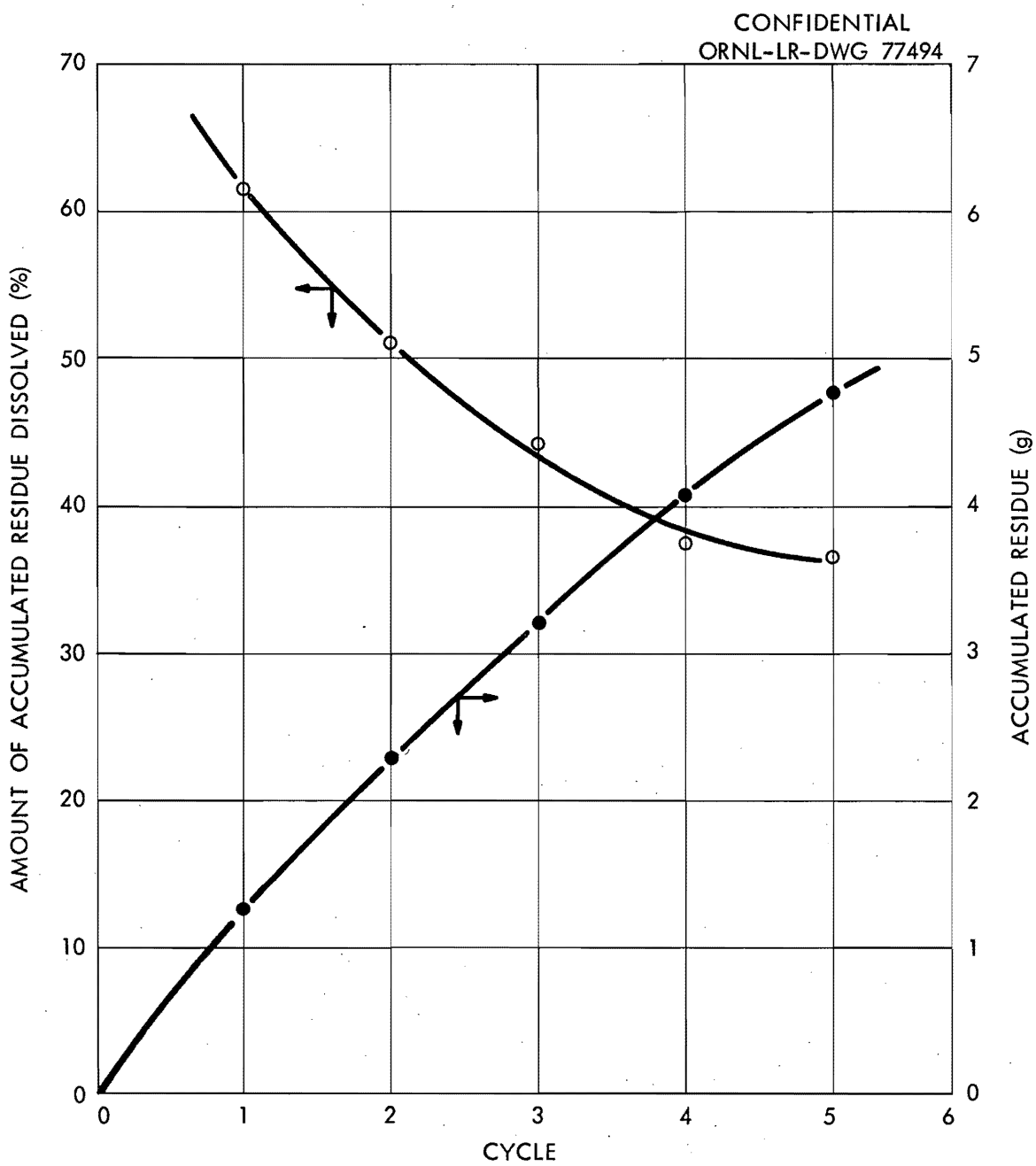

Fig. 1. Buildup of Residue During Five-Cycle Experiment in Which Rover Combustion Ash Was Dissolved in Boiling 1 M HF--4 M HNO_3. A fresh charge of 3.45 g of ash was added at the start of each cycle, along with 100 ml of fresh reagent. The F/Nb mole ratio in each cycle ranged from 5 to 10.

will be required at all, thereby avoiding the corrosion problems introduced by the use of hydrofluoric acid. The product solution thus produced would have to be separated from the insoluble Nb_2O_5 by either filtration or centrifugation. The basis for optimism for this process stems from the new method of manufacturing the coated-particle fuel elements. In this method, before applying the NbC liner, the hydrogen coolant channels are pretreated with hydrogen chloride gas at high temperature to remove the uranium from any particles broken when the channels were reamed out. Thus the liner, after high-temperature operation, may be free of uranium, and oxidation may not produce Nb_2O_5 containing unleachable uranium.

In a single experiment using the Burn-Leach procedure, a sample of coated-particle Kiwi-B4A fuel was burned in oxygen at 800°C for 5 hr. Then, the oxide ash was leached for 5 hr with boiling 6 M HNO_3. The product solution (1.44 M $UO_2(NO_3)_2$, 4.2 N H^+) was separated from the insoluble Nb_2O_5 residue by vacuum filtration. This solution contained only 0.05% of the niobium, and only 0.6% of the uranium was found in the Nb_2O_5 residue. Because of the favorable result in this experiment, further tests of this procedure will be made.

2.5 Corrosion Tests Relating to the Deline-Burn-Dissolve Process

Corronel 230, Carpenter 20, Haynes 25, and type 304L stainless steel were subjected to a test cycle in which the specimens were buried in a paste of graphite and UO_2, wet with 0.5 M HF and 0.25 M HNO_3. The mixture was burned at 800°C in oxygen for 5 hr and then digested in 5 M HNO_3 for 2.5 hr.

Corrosion rates were as follows: type 304L, 14.5 to 19.6 mils/month for nine cycles; Carpenter 20, 0.36 to 1.69 mils/month for seven cycles; Haynes 25, 0.85 to 2.06 mils/month for six cycles; and, Corronel 230, less than 0.1 mil/month for eleven cycles. The 304L steel showed grain boundary attack. "A" nickel was attacked much more rapidly than any of the alloys.

3. CHLORINATION AND CHLORIDE VOLATILITY STUDIES ON THE RECOVERY OF URANIUM FROM ROVER FUEL COMBUSTION ASH

3.1 Chloride Volatility Studies

Three Rover runs involving burning of the fuel in oxygen, chlorinating the ash with 15% CCl_4--85% Cl_2, and separating the $NbCl_5$ with argon, have been completed in the Torrefactor. The design of the Torrefactor and objectives of the work were discussed in the previous monthly report.[2] In these first three runs the main concern was in getting the equipment to operate, and the results (Table 3) should be considered as only an indication of what may be accomplished when the process operates properly.

In general, the burning the chlorinating steps proceeded better than predicted from laboratory studies, but the product collection and separation did not work as well. None of the three runs was completely satisfactory. Changes are being made in the product collector so that improvement in these operations should be achieved in future runs.

In all three runs (a whole Rover rod was used in the third), combustion was complete in 2 hr or less, in contrast to almost 4 hr in smaller-scale laboratory work, yet no sintering or melting of the ash was observed. The reason for the high rate is that the reagent inlet tube distributed oxygen along the entire rod so that the complete surface burned uniformly.

In the first two runs, the chlorination operation took 2 to 3 hrs, less time than the 4 hr needed in smaller-scale laboratory runs. The reason that a longer time (5.2 hr) was needed for complete chlorination in the third run was that the walls or the vessel were kept cooler, thereby holding back uranium chloride, for reasons discussed below. The higher concentration of uranium chloride in the vapor inside the Torrefactor apparently slowed the chlorination reaction.

A source of uranium loss, which was not found in smaller-scale work, developed during the Torrefactor runs. In the first two runs, nearly 1%

---

[2] F. L. Culler, Rover Report for November 1962, ORNL-TM-443 (in press).

Table 3. Summary of Rover Runs in the Torrefactor

Percentage of Uranium remaining in Torrefactor between runs: 0.02

Run No.	Weight of Constituents (g)			Operation	Reagent	T_1 (°C)	Time (hr)	Efficiency in Use of Reagent (%)	U Loss to $NbCl_5$ (%)	Nb Removal (%)	U Loss to Caustic (%)
	U	Nb	C								
1	25.0	9.6	137	Combustion	O_2	~600	2.0	24	0.03	41.9	0.96
				Chlorination	15% CCl_4--Cl_2	500	3.0	50			
				Separation	Argon	40-425	2.0	--			
2	19.6	none	159	Combustion	O_2	550-690	1.3	36	No Nb Present		0.85
				Chlorination	15% CCl_4-Cl_2	500	2.0	11			
				U removal	Cl_2	400	2.5	1			
3	47.8	26.8	222	Combustion	O_2	530-650	1.8	40	0.04	95.0	0.04
				Chlorination	15% CCl_4--Cl_2	500	5.2	13			
				Separation	Argon	40-400	2.6	--			

of the uranium was found in the caustic scrubbers used to absorb chlorine from the off-gas. The reason for this apparently is that the collector for the condensed chlorides, which operated at room temperature during the smaller-scale runs, was heated by the hot off-gases to about 75°C. At this temperature the capacity of chlorine gas for carrying UCl_6 as a vapor must still be appreciable. To minimize the temperature rise in the chloride collector by keeping the off-gases cooler, in the third run the heaters for the mercury jacket on the Torrefactor were not turned on during chlorination, and the mercury temperature rose to only about 200 rather than to 360°C, its normal boiling point. This change in procedure worked quite well, and led to only a 0.04% uranium loss to the caustic scrubbers, but the chlorination reaction was hindered by the slower movement of uranium chloride out of the reaction area. In preparation for the next run, the chloride collector has been equipped with a copper cooling-water coil to prevent the collector from being heated to above room temperature.

The least satisfactory performance occurred in the operation in which $NbCl_5$ was volatilized away from the uranium chloride. In the first trial, only 42% of the niobium was removed. However, the poor removal apparently was due to uneven heating and cold spots in the chloride collector. By redesigning the chloride collector to achieve more even heating, 95% removal was achieved in the third run. This degree of removal is still unsatisfactory, and it should be possible to duplicate the 99.9+% routinely achieved in smaller-scale work. The poor removal was probably due partly to malfunction of the heater and too low a heating rate. The separation should be performed in about a half hour, rather than the 2.6 hr needed in run 3.

In the second run, removal of uranium chloride from the chloride collector in a stream of chlorine at 400°C was attempted. A large excess of chlorine was needed, and 11% of the uranium was not removed by this method. The explanation for this holdup is not known.

4. RECOVERY OF URANIUM FROM SPENT ROVER FUEL BY THE COMBUSTION-FLUORINATION PROCESS

4.1 Introduction

The Combustion-Fluorination Process represents the main effort in recovering uranium from spent Rover fuel. The process is basically a two-step one, beginning with the burning of the graphite-matrix fuel elements to remove the graphite as CO_2 and to leave an ash that consists of niobium oxide (from the NbC liners in the coolant channels) uranium oxide, U_3O_8 or UO_2, and the nonvolatile fission product oxides. The second operation consists in fluorinating the ash in the same container, producing UF_6 and volatile fluorides of niobium and of some of the fission products. The separation of the uranium from the other volatile fluorides depends on merely taking advantage of their differences in physical properties, and much of that technology is already well known. The chief problems to be met and solved are in the burning of the element and the fluorinating of the ash. The work reported for this period is a continuation of those studies with a 5-in.-diam cylindrical reactor.

4.2 Status of Development

A large-scale test facility for development of the combustion and fluorination process for Rover fuel was constructed. The unit presently includes a five-inch-diam cylindrical reactor for combustion and fluorination of 3-kg (uranium) batches, and a distillation column plus sorption beds for product separation. This unit has been operated for combustion and fluorination of one fuel batch containing about 2.6 kg of uranium.

The aqueous-process variations have been done in engineering-scale laboratory equipment and include HNO_3-HF delinering of the fuel element prior to combustion and nitric acid dissolution of the ash from combustion of delinered fuel (reported previously).

Studies of methods for breaking fuel into approximate right cylinders were conducted. Simple impact shearing was effective and produced a minimum of fines. A test device for this use was designed, fabricated,

and tested. The packed density and other loading characteristics were determined for cylindrical- and slab-reactor geometry.

4.3 Current Experimental Work

4.3.1 Combustion of Fuel Rods

A batch of 58 fuel rods 27 in. long weighing 16,770 g and containing 2570 g of uranium was burned in the five-zone large-scale reactor in 15 hr. The total feed rates of air and oxygen and the CO-CO_2 percentages in the total off-gas are shown in Fig. 2. The oxidizing gas flow was started by first admitting air to the bottom zone only, then starting an oxygen flow to each zone separately, starting with the No. 1 (bottom) zone and ending with zone 5 at the time shown on the plot; after that time, all zones were receiving oxygen feed continuously. The feed rate to the individual zones was varied several times throughout the run; the indicated center-line temperature of each zone was used as a basis for variation. The plot (Fig. 2) shows four bar diagrams indicating the oxygen feed rate in standard liters per minute to each zone at four times chosen to illustrate this variation. Each zone was equipped with a thermocouple (Pt vs Pt-Rh) at the center line. The point of maximum temperature varied from one zone to another as the oxygen feed rate varied. The maximum temperatures recorded are shown on the plot without regard to zone location. Wall temperatures were held at 600°C with very low coolant flows throughout the run.

At the end of the run, the sintered metal filter was very lightly coated with a fine, dark-green, nonadherent powder. The powder was collected as quantitatively as possible by brushing the 35.75-in. long, 2.5-in.-diam filter. The sample weighed 0.1475 g and had the following composition: 26.6% U, 7.3% Nb, 0.54% Ni, 7.3% Fe, and 0.19% Cr. A very light coating of the same material covered the walls of the upper section of the reactor. Figure 3 is an electron micrograph at 20,000X of this material. A plot of particle-size distribution is shown in Fig. 4.

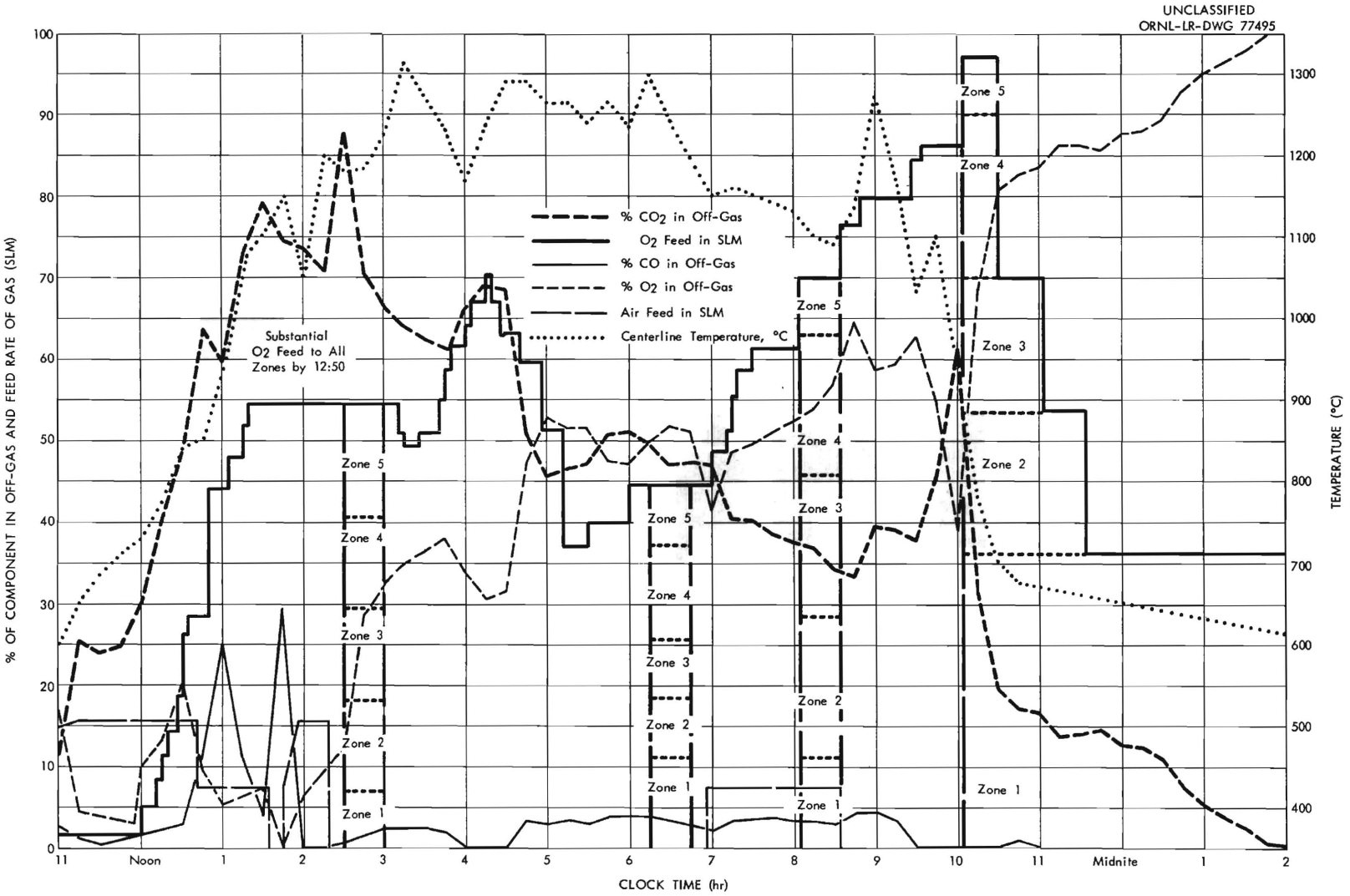

Fig. 2. Gas-Feed Rates and Off-Gas Compositions for Oxidation Run O-1. Both % composition and gas-feed rate are listed on the left ordinate, with values lying between 0 and 100.

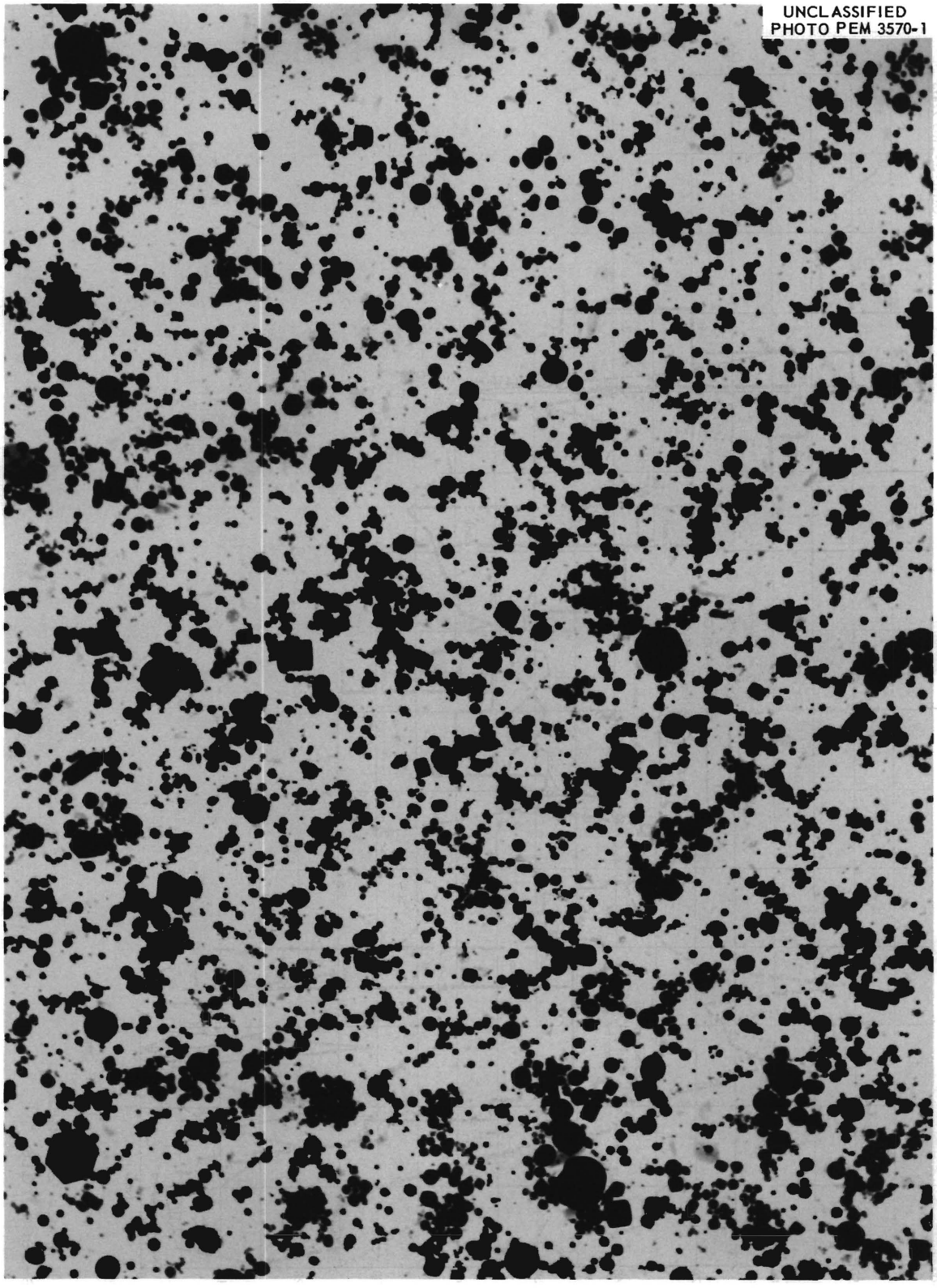

Fig. 3. Solids in the Off-Gas from Oxidation Run O-1. 20,000X.

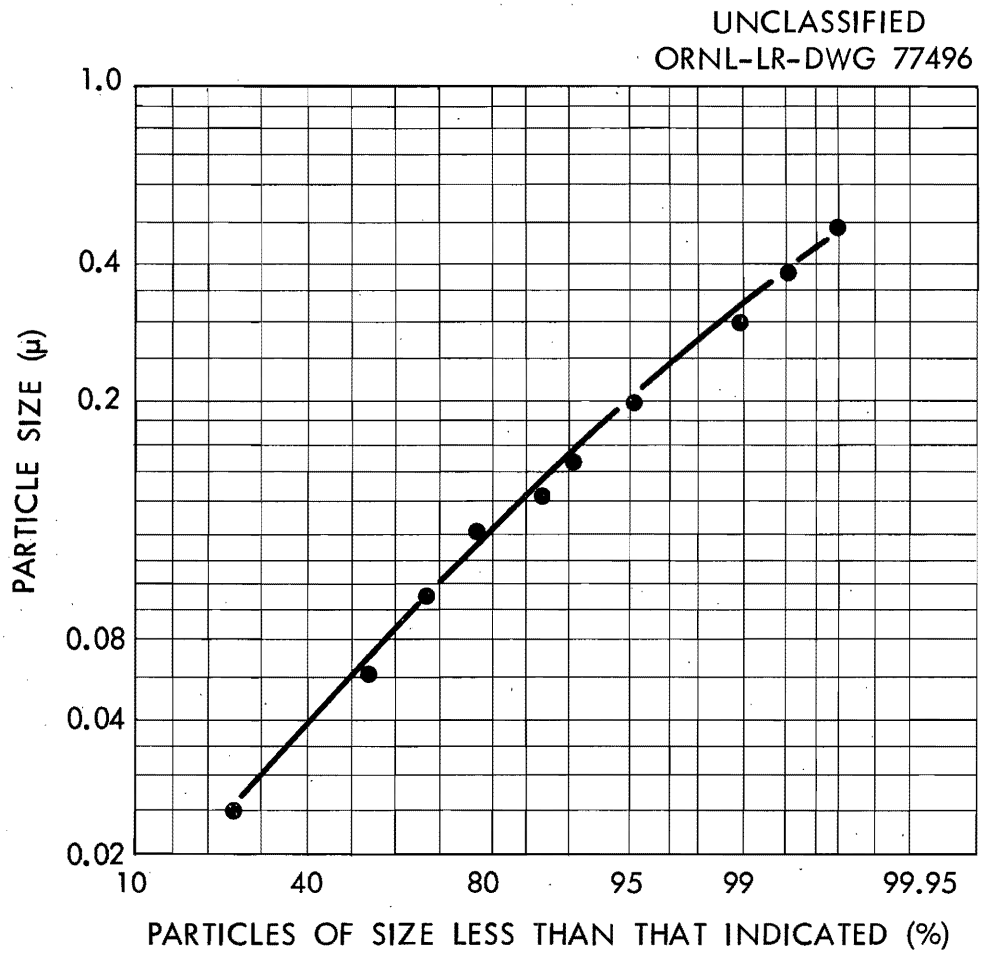

Fig. 4. Particle-Size Distribution of Solids in Off-Gas from Oxidation Run O-1. Distribution obtained by physical sizing and from counts from electron micrographs; O-14 filter.

The oxide residue was removed from the reactor and examined visually. Apparently the sintering usually seen had occurred in this run, but most of the rod shapes were broken up in the handling necessary to remove the charge. The liner tubes in oxide form and in lengths up to about 6 in. were numerous, as in previously reported experiments. A few small, irregularly shaped pieces of semifused uranium oxide were found in the residue, but there was no indication of complete melting. A few small pieces of what appeared to be the most-fused material was fluorinated in a small, laboratory tube-furnace fluorinator. The samples reacted completely and appeared to fluorinate at the same rate as nonfused oxides. There are no numerical data on these rates.

The oxidation procedures used in this run were deliberately very conservative since this was the first operation of the equipment. The conservatism was accentuated by a factor error in calibration of some of the flow instruments, resulting in lower feed rates than were intended. It appears that all zones can be burned concurrently, after a short "ashing" period, and at higher gas rates for each zone. The effect of air and/or oxygen on CO content of the off-gas stream is indicated in Fig. 2. All the air used in this run was admitted to the bottom zone of the reactor, which is operated in upflow.

The gas flows used resulted in superficial gas velocities of less than 1 fps in the reactor. This relatively low velocity probably accounts for the extremely small filter loading.

The carbon balance for the run, based on off-gas composition and volume of feed gas, was 95%. The maximum burning rate was about 3 g-moles/min, and the average rate was 1.15-g moles/min.

4.3.2 Fluorination of Oxide Residue

The oxide residue was fluorinated at 425°C (480°C during last hour) in 4 hr 12 min of total fluorine flow through the reactor. The log of time and fluorine flow rates is shown in Table 4. The residue remaining in the reactor weighed 78.27 g and contained 12.1 g of uranium. This represents a uranium loss of 0.47%.

Table 4. Data on Fluorine Use in Run F-1

Date	Clock Time	F_2 Rate (slm)	Time at Rate (min)	Flow During Period (liters)
1/23/63	1520-1535	9.75	15	146
	Shut down, system plugged			
1/25/63	1430-1517	6.3	47	296
	1517-1531	10.66	14	149
	1531-1554	14.70	23	338
	Normal shutdown			
1/28/63	1159-1215	10.66	16	171
	1215-1231	15.0	16	240
	Shut down for minor maintenance			
	1241-1312	15.0	31	465
	Shut down, column plugged			
	1405-1535	14.1	90	1269
	Normal shutdown			
		Total	252 min	3074 liters

Total moles of fluorine = 137
Stoichiometric quantity of fluorine, moles = 72.4
Fluorine utilization = 72.4/137 x 100 = 52.6%

Of the 12.1 g of uranium loss, 11.5 g were found in the bottom flange area below the fuel-support plate. This section was not equipped for heating and consequently did not exceed 300°C during the fluorination. With provisions for heating, this loss can be greatly reduced.

At the time of this reporting, the final distillation separation step was not done because of the need for minor modifications to the still column. When the distillation has been made, additional data as itemized below will be available.

Quantities Yet to be Determined

Weight of uranium adsorbed on product trap (NaF bed)
Weight of uranium retained on niobium trap (NaF bed)
Weight of uranium remaining in still-bottom liquid
Weight of niobium adsorbed on niobium trap
Weight of niobium remaining in still bottom liquid
Two values of U/Nb ratio in exit gas from the still head

The sum of these weights plus the losses to the reactor residue subtracted from the original charge weight constitutes the system holdup.

The fluorination operation was interrupted several times, as noted in Table 4. All these interruptions were due to stoppages (plugs) in the product transfer system between the reactor vessel and the adsorbent beds for the product. Because of a lack of operating familiarity with the system and also because of minor equipment insufficiencies, considerable time was expended in determining the location and cause of the plugs.

Brief Description of Condensing and Rectifying Sections. — A brief description of the condensing and rectifying section of the process will assist in understanding the problem. The engineering flowsheet and a list of equipment drawings is available in ORNL-TM-408. The operation involves the transfer of UF_6 and NbF_5 from the reactor vessel through a heated line (held at 300°C) to a condensing unit equipped with internal and external copper cooling coils. The purpose of this unit is liquefaction of as much of the NbF_5 as possible.

The operating temperature cannot presently be calculated because of insufficient data on vapor-liquid equilibrium in the UF_6-NbF_5 system and also because of lack of information on mutual solubilities and the freezing point of the combined liquid system. The problem is also complicated by the presence of noncondensable gases, oxygen from the oxide-fluoride reaction and from unreacted fluorine. Also, the ratio of condensable to noncondensable gases will vary with fluorine utilization. Because of these uncertainties, the normal melting point of pure NbF_5 was chosen as the lowest possible operation temperature. The liquid condensed at this point is transferred through a heated line to the still reboiler. The optimum operating temperature for this line was also unknown, but, to avoid plugging with viscous liquid, it was operated at 100°C or slightly higher.

The intended function of the still reboiler during fluorination is that of a liquid NbF_5-UF_6 collector only, since the presence of noncondensables makes the packed-column operation uncertain. For the reboiler, the noncondensables, a major part of the UF_6, and a small fraction of the NbF_5 are expected to pass through packed column to the still condenser, which consists of cooling coils location in the vapor space in the still top. This condenser is to be run at a temperature just above the freezing point UF_6. The vapors then leave the still and pass to a preheater, which brings the gas temperature to 400°C before it enters the niobium trap--a bed of NaF operated at 400°C. From this trap the vapor goes to an NaF bed at 110°C for UF_6 collection and thence to the off-gas system through a pressure-control valve. The entire system is equipped for pressure measurement at the reactor, at the head of the still, and at the off-gas control valve. The normal operation pressure was chosen as 5 psig at the control valve.

Returning to the problem of the plugging in the product transfer system: During operation a plug developed soon after fluorination started and caused a shutdown. At this time an estimated maximum of 285 g of UF_6 and 200 g of NbF_5 had been transferred out of the reactor.

This is equivalent to about 200 cc of liquid if totally condensed. The plug was indicated by a decreasing flow through the system and an increasing pressure difference between the reactor and the still head. This section includes both liquid transfer lines, both condenser pots, and the reboiler and packed column. Because of some uncertainties in the exact location of thermocouples, as well as a lack of the ability to heat the area around the bottom of the packed section, the shutdown period was utilized to make some changes as well as to confirm the location of the plug. It was extablished finally that the plug was in the bottom of the packed column, probably in the packing, and that it was caused primarily by leakage of cooling water through a closed valve into a cooling coil located at that point in order to form a freeze valve for retaining column holdup after distillation. After this condition was corrected, operation was resumed.

As shown in Table 4, operations were again interrupted by plugging. This was assumed to be in the packed bed, possibly higher in the column than the first plug. The condition was corrected by applying heat to the reboiler and refluxing hot vapor against the plug until it softened. This method of operation limited the separation function severely but was needed to finish the run. Additional heat will be supplied to the column before further runs are made. After this extra heating has been supplied, the liquid remaining in the still system will be melted and drained into a closed container for weighing and sampling. If the quantity and composition of this liquid are near enough to the anticipated values, it will be returned to the column and distilled.

Because of many unknowns involved in the functioning of condenser and still during fluorination, an effort was made to sample the gas stream leaving this part of the system. The first unit used was a battery of small sodium fluoride traps arranged to take samples of the gas stream at a controlled rate. The gas entry to the different sampling units was initiated and timed by opening the appropriate solenoid valve. Also, a purge of the sampling system between samples was provided. Two of the

samplers were operated during approximately steady-state periods of operation. Results of the samples were not available at report time.

A second sampling or monitoring system was installed downstream from the product trap (bed of NaF) to determine the F_2/O_2 ratio in the off-gas stream. At this point the gas stream should contain only fluorine, oxygen, and a small fraction of nitrogen from instrument-purge flows. A gas-density cell was set up for continuous monitoring of a side stream of this gas. Due to inadequate temperature control of the cell environment, the signal output cycled badly and did not furnish information reliable enough to serve as an operating guide, which was the intended purpose. An improved, constant-temperature system is being installed and will probably result in satisfactory operation.

Inspection of the reactor at the end of the run showed an apparently complete fluorination and transfer of metallic fluorides, except for the usual nickel fluoride residue. Three different fractions of residue were collected, one from the bottom support plate, one from the reactor walls, and one from the fluorine inlet chamber below the support plate. The weights of these fractions are 41.96, 17.79, and 18.52 g, respectively. The filter had been removed prior to fluorination and therefore did not contribute to the residue.

4.3.3 Breaking and Packing Tests on Graphite Rods

Breaking tests on unlined graphite rods [0.75-in.-diam rounds with seven holes, and 0.78-in. hexagonal (uranium-fueled) rods having 19 holes], showed that only about 0.1 to 0.6% of the rod weight was converted to fines in producing 0.75-in. lengths. A kinetic energy of no more than 2 ft-lb in the falling blade was required for fracture. The broken rods packed to a density of about 2100 in. of rod per cubic foot.

Several blade shapes were tested in the guillotine-type breaking device (Fig. 5), and a number of variables were examined. The summarized results are listed below.

1. Blade Shape. Blade A required the least energy (about 0.5 ft-lb) to break the fuel rod, but careful alignment of the blade and graphite

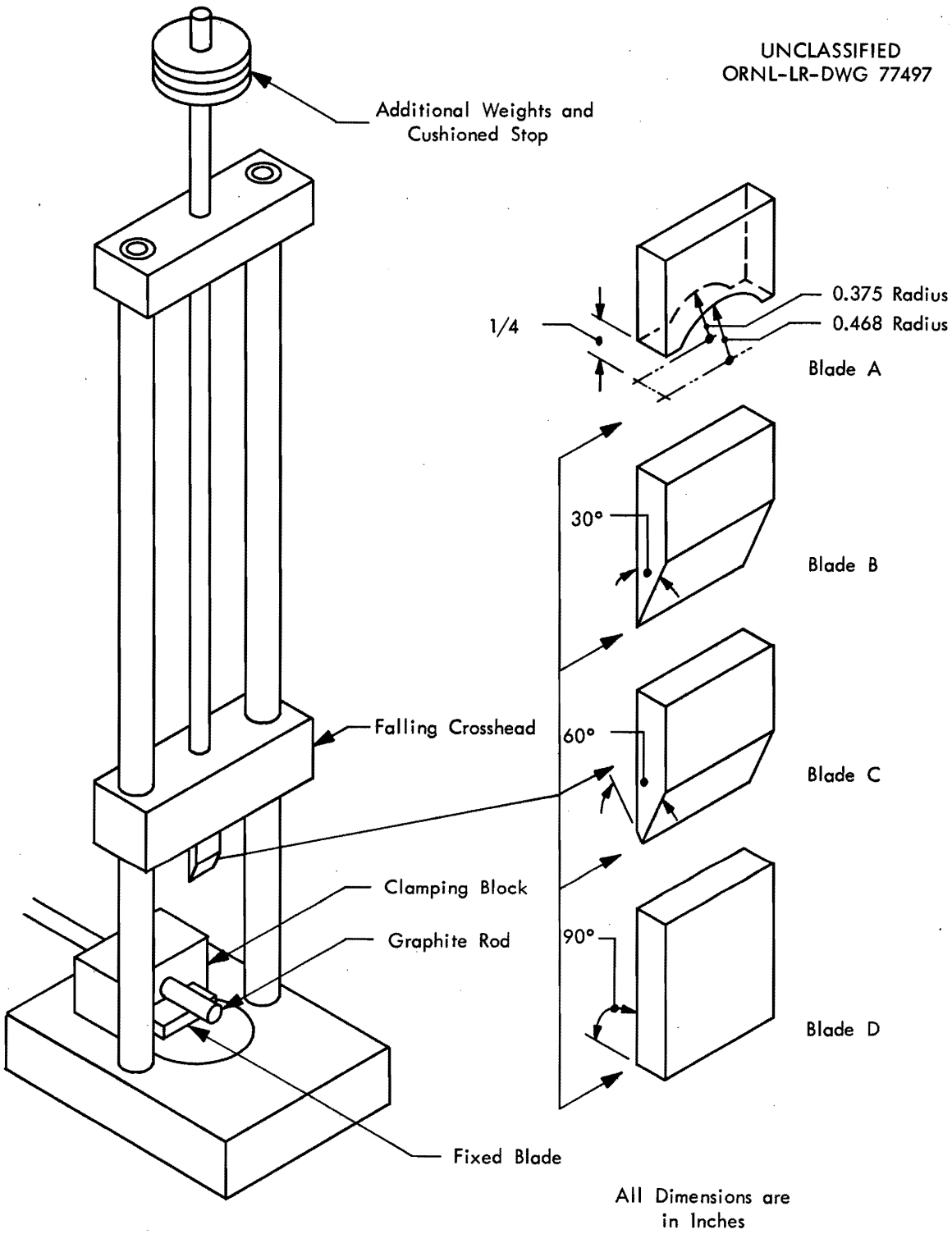

Fig. 5. Sketch of Guillotine Test Device for Breaking Graphite Rods. Falling-crosshead mass increments: 1.375, 2.0, 3.0 lb. Maximum height of fall: 20 in.

rod was necessary. Blade B is probably the best choice since it worked equally well with both round and hexagonal rods; blade C produced similar results. Blade D was clearly unsatisfactory since it generally fractured the severed piece into several parts.

2. Kinetic Energy of the Blade: Velocity. In general a kinetic energy of 1 to 1.3 ft-lb was required for breaking off a length of rod, and the energy required was independent of blade velocity over the range of 50 to 85 in./sec. However, at a blade velocity less than 50 in./sec the fracture shape and site were unpredictable.

3. Production of Fines. The amount of fines produced per break was virtually independent of energy over the range 1 to 3.3 ft-lb and of velocity over the range 55 to 125 in./sec (see data for hexagonal rods, Fig. 6). The hexagonal rods that contain pyrolytic-carbon-coated UC_2 particles (200 to 400 mg/cm^3) produced less fines than round rods. Lined rods may be expected to perhaps double the amount of fines.

4. Blade Clearance. A nearly square break was produced on hexagonal rods, with a blade clearance of 0.005 in. With a larger cleanance, about 0.25 in., a diagonal break was produced in both round and hexagonal rods; this clearance is recommended.

5. Shape of the Fixed Blade. The ordinary square-edged fixed blade was the best shape tested. Fixed blades having a raised edge acting as a fulcrum required a minimum of 2 ft-lb of energy in the moving blade to break a graphite rod.

6. Clamping. Clamping the graphite rod was found to be necessary. Loosely restrained rods required more energy for fracture, and the place of fracture could not be predicted.

The packing characteristics were determined for stand-in material made by breaking 3/4-in.-diam solid graphite rods into 3/4-in. lengths. In a 5-in.-diam container the random-packing density was 2090 in. of rod per cubic foot. In a critically-safe section (2.5 x 24 in.), the packing density was 2150 in. of rod per cubic foot.

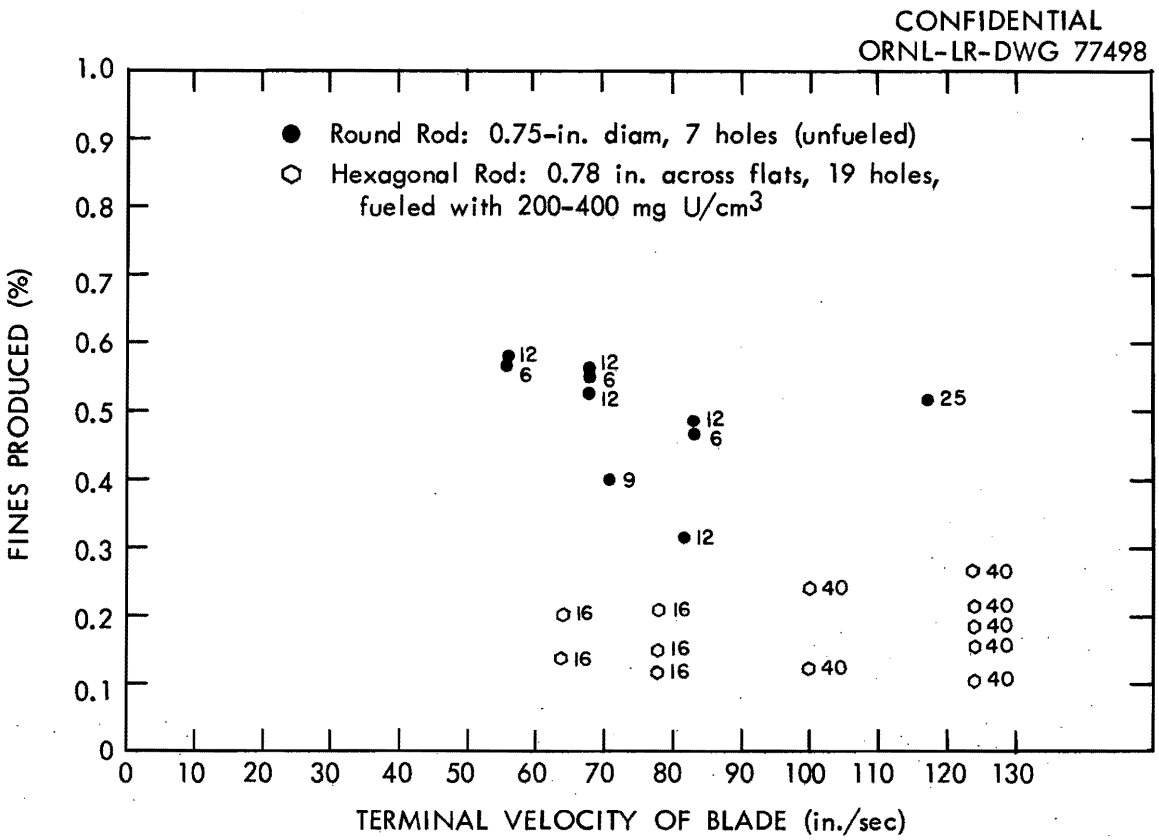

Fig. 6. Percentage of Fines Produced vs Terminal Velocity of the Blade. Broken lengths about 0.75 in. long were produced by falling blade "B" and the square, fixed blade. Each point represents the average of three breaks. The numbers adjacent to the points in the graph indicate the kinetic energy of the falling blade, in inch-pounds.

Loading tests on a 2.5 x 24 x 36-in.-high (Plexiglas) mockup of a critically-safe reactor showed that 3/4-in. lengths of graphite rod dropped in through a central tube from a height of 10 to 12 ft produced a pile of pieces having a 4 to 5 in. slope, center to edge. A virtually flat bed was produced by inserting a 1/4-in.-diam deflector pin about 2 in. below the chute. However, while the pin caused the conversion of only about 0.2% of the solid pieces to fines, perforated fuel rods would probably produce much more.

4.3 Conclusions

1. From the performance during the first run it was concluded that the equipment can be operated at rates approximately twice those used in this experiment, without heating the wall of the reactor and without unusual filter or carbon monoxide control problems. Some fusion or slagging would probably occur along the reactor center line, but it is not anticipated that the effect would be great enough to result in a considerable extension of fluorination time.

2. Combustion times of 8 hr or even less, coupled with an estimated fluorination time of 4 hr, indicate a maximum capacity of about 5 kg of uranium per 24 hr for a 5-in.-diam cylindrical reactor. In view of the rate of 20 kg of uranium per 24 hr stipulated for a production facility, it seems that five or six units in parallel would be required. A reactor having a higher batch capacity is probably required, and the design is underway of a slab-type vessel for this purpose. Because of the slab geometry, capacity can be increased without increasing radial bed depth, as in cylindrical reactors. The criticality factor also operates against the use of high-capacity cylindrical burners.

3. Fluorination in the large reactor can be accomplished at rates comparable to those for smaller-scale work. In the absence of large fused masses of oxide, complete fluorination can probably be done in 3 hr or less.

4. Current information is insufficient to evaluate the condensing-distilling separations system. It appears to be an operable system, but

the amount of niobium passed overhead and the uranium holdup are the decisive factors, and these are not yet predictable.

5. Mechanical breaking of fuel rods for charging to a reactor can be accomplished simply and without the production of an excessive amount of fines. The mechanical principles have been well-outlined.

6. Rods broken to right cylinders can be charged to either a slab or cylindrical reactor without concern about voids or low-density loadings.

4.4 Temperature Limits for the Off-Gas Filter of the Reactor

A series of cyclic oxidation-fluorination exposure tests of candidate filters for the off-gas system (high- and low-purity porous alumina, nickel and Monel Yorkmesh, nickel Rigimesh, and nickel and Monel sinters) was conducted by the Oak Ridge Gaseous Diffusion Plant's Engineering Development Department. The tests were conducted at 600°F with alternate 4-hr exposures to pure oxygen and then to fluorine. The samples were cooled to 100°F between exposure to the respective gases and were weighed after 11 and after 24 cycles. The impure alumina and one specimen of high-purity alumina showed a weight loss at the end of the first series; so, testing was discontinued on alumina specimens. Fine nickel and Monel sinters showed weight gains of about 0.17% for 25 oxygen cycles and 24 fluorine cycles. All other metal specimens showed weight gains $\leq$ 0.044% and a corresponding fluoride pickup of $\leq$ 0.15%. The appearance of all samples after exposure was good. From this it was concluded that little filter plugging should have occurred due to the small amount of corrosion products that were produced (see Table 5 for results). Based on previous ORGDP experience, it was thought that the upper temperature limit for reactor service would be about 400°F. The results are encouraging for achieving a long useful life for the off-gas filter.

4.5 Hazards Review of the Combustion-Fluorination Facility, Building 3503

The rather high F_2, CO, and SO_2 concentrations that might occur in the roof stack discharge from Building 3503 in the event of a serious

5. Results of Exposure Tests on Filter Media

(Letter from S. H. Smiley to E. L. Nicholson, KL-1516, Jan. 30, 1963)

	Test Period 1			Test Periods 1 and 2			
Sample	Number of Oxygen Cycles	Number of Fluorine Cycles	Weight Gain (%)	Number of Oxygen Cycles	Number of Fluorine Cycles	Weight Gain (%)	Fluoride (%)
Yorkmesh nickel	12	11	0.014	25	24	0.019	0.090
Yorkmesh Monel	12	11	0.000	25	24	0.008	0.037
Fine nickel screen[a]	12	11	0.016	25	24	0.025	0.048
Coarse nickel screen[b]	12	11	0.002	25	24	0.008	0.012
Fine nickel sinter	12	11	0.002	25	24	0.044	0.150
Fine Monel sinter	12	11	0.043	25	24	0.178	0.247
Alumina disk[c]			-	11	11	0.104	-
Alumina disk[c]			-	11	11	-0.166	-
Alumina tube[d]			-	11	11	-4.97	-

[a]Rigismesh filter media.

[b]Rigimesh filter media backup.

[c]Pure alumina disk supplied by American Lava Company.

[d]Alumina tube containing large amount of silicon.

accident in the Oxidation-Fluorination Facility have caused some concern. Consequently, the process-equipment exhaust from the spray tower was connected to the plant-vessel off-gas system. A fluorine detector was installed to monitor the cell-ventilation air for fluorine leaks.

4.6 New Combustion-Fluorination Reactor: Design Calculations

Design calculations were completed for the heat transfer problems associated with the proposed new slab reactor. Detailed structural calculations were almost complete, and detailed design of the reactor had started at the end of the month. All materials, except for the electrical heaters, are on hand, and fabrication will start early in February in the ORNL shop.

The slab is 4 ft high by 2 ft long and is 2-1/2 in. in inside width. A 3-ft-deep fuel bed is used, instead of the previous 4-ft depth, to minimize the amount of fuel consumed per run. The capacity of the slab is 60 full-length fuel rods chopped into 3/4-in.-long pieces. Oxygen inlets are provided to divide the 3-ft-deep bed horizontally into three combustion zones. Cooling is provided by a compressed air--water spray in horizontal, trapezoidal cross section, channels on each side of the reactor. The walls of the channels provide the necessary structural reinforcement for the flat 1/4-in.-thick nickel walls of the reactor. Tubular heaters are attached to the vessel wall between the cooling channels.

Early structural studies for the reactor had been almost complete for a curved-slab configuration (segment of an annular tank), which solved the structural problems associated with a flat slab. Cooling was to be provided by attaching "Platecoil" embossed cooling channels to the reactor wall. This concept was not adopted because of possible delays in having Platecoil fabricate the vessel and because the ORNL shops were immediately available and could make the simpler, flat-sided vessel with the larger channels for cooling. The resulting flat-slab vessel will be adequate but is not as good from the criteria of cooling efficiency, simplicity of operation, criticality, or extrapolation of the basic design to a larger unit.

The outside surfaces of the cooling channels will probably be plasma-jet sprayed with a gadolinium-samarium oxide mixture to minimize nuclear reflection. The ORGDP Engineering Development Department is developing the spraying procedure and will test the stability of the ceramic coating.

Heat transfer calculations for the slab assumed a 4-hr combustion period for 60 rods, with the burning bed at 1300°C and the vessel walls at 250°C. One-third utilization of the oxygen was assumed. Furnace-type heat transfer calculations (Kern, "Process Heat Transfer") indicated that the walls of the 1-ft-high free section above the fuel bed should cool the combustion gas from 1300 to less than 1000°C. The average net wall flux in contact with the fuel bed is 16,300 Btu hr^{-1} ft^{-2}. This is about 16% less than the 5-in. reactor with a 4-hr combustion for 30 rods and is easily attainable with evaporative spray cooling.

A detailed heat transfer analysis of the bayonet fin tube off-gas cooler assembly for the 5-in. reactor showed that it would be able to cool the slab reactor off-gases from 1000 to $\leq$ 250°C, which is a safe filtration temperature. Radiant heat transfer from the gas was evaluated by furnace-calculation methods.

The convective transfer coefficient for the interrupted and twisted fins of the bayonet were evaluated from the experimental data of Gunter and Shaw.[3] If the fins had not been interrupted and twisted to promote gas turbulence, the capacity of the unit would have been inadequate.

5. LABORATORY STUDIES IN SUPPORT OF THE COMBUSTION-FLUORINATION PROCESS

5.1 High-Temperature Reactions Between Nb_2O_5 and Fluorides in Postfluorination Ash

It was previously reported that the presence of fluorides during the combustion of Rover fuel may lead to the relocation of uranium and

[3] A. Y. Gunter and W. A. Shaw, "Heat Transfer, Pressure Drop, and Fouling Rates of Liquids for Continuous and Noncontinuous Longitudinal Fins," pp 150-58 in Refiner and Natural Gasoline Manufacturer 21, No. 5 (May 1942).

niobium oxyfluorides outside the normal heating zone of the reactor, resulting in low uranium and niobium conversion and possible plugging of lines and filters. In the previous work only qualitative information was obtained on the amount volatilized, and, in addition, the reagents (powders) were well mixed. The purpose of the present work was to show the effect of poor mixing on the reaction and volatility of one of the oxides of interest, Nb_2O_5.

In a plant operation involving recycle of postfluorination ash, an extreme of poor mixing could exist in which a fluffy layer of oxides is deposited on the top of the fluoride ash layer. This situation was simulated in a platinum test tube (1/8-in. in diameter and 1 in. long) heated by induction. The fluoride-bearing lower layer was Unit Operations' run-4 postfluorination ash, containing mostly NiF_2, with 1.3% Fe and minor quantities of Nb, U, Co, Mn, and Cu, as the major contaminants. The upper layer was pure Nb_2O_5. The reaction did not appear to initiate until 1010°C was reached. There resulted, after 1 hr at 1010°C, a weight loss of 15% of theoretical (based on the conversion of Nb_2O_5 to NbO_2F).

The above result shows that even under the poorest of mixing conditions a considerable amount of reaction and consequent displacement of the oxides of interest could occur. By way of comparison, the other extreme (thorough mixing) was provided in another experiment by heating an intimately ground (1:1) mixture of Nb_2O_5 with a synthetic ash (98.7% NiF_2 plus 1.3% FeF_2). A rapid reaction, indicated by smoke, initiated at 785°C, where the temperature was held for 1 hr. The weight loss was 50.9% of theoretical. Material in addition to this was volatilized from the original reaction mixture since a thick deposit of white feathery crystals remained on the upper inside rim of the test tube.

5.2 Densification or Melting of Ash During Combustion of Rover Fuel

It has been reported in previous Rover progress reports that the pure ash mixture melted at 1475°C and that an ash containing 7% iron produced by a Unit Operations' run in a stainless steel reactor melted at 1350°C.

A sample of the ash from the first cycle in the new nickel reactor (RO-1) melted at 1475°C and flowed freely at 1525°C. It contained less than 0.5% of metal impurities.

5.3 Fluorination Characteristics of First-Cycle Ash from the New Nickel Reactor

The fluorination characteristics of first-cycle ash from the new Unit Operations' nickel system was determined by the thermogravimetric method described last mongh. A pellet quenched from RO-1 ash melt noted above was used. The sample fluorinated rapidly and completely, below 450°C. Microscopy of the solid ash prepared by rapidly cooling a melted ash showed crystallinity, bubble-hole formation, and many stress cracks; these characteristics have been found in all fused ash materials. It appears that much reaction surface is already present for fluorination and that spalling occurs once the fluorination is under way.

ERRATA

There was an error in the Rover Report for November 1962, ORNL-TM-443. Line 8 on page 40 should read, "temperature of 600°C <u>no</u> thermogravimetric indication of further reaction was ..."