MASTER COPY

OAK RIDGE NATIONAL LABORATORY
operated by
UNION CARBIDE CORPORATION
for the
U.S. ATOMIC ENERGY COMMISSION

ORNL-TM-540

DRAFT

TECHNICAL PROGRESS REVIEW

NUCLEAR SAFETY

VOLUME 4, NO. 4

NOTICE

This do[redacted]contains information of a preliminary nature and was prepared primarily for interna[redacted]at the Oak Ridge National Laboratory. It is subj[redacted] to revision or correction a[redacted]therefore does not represent a fina[redacted]. The information is not to be abstrac[redacted]reprinted or other[redacted]given public dissemination without the approval of th[redacted]branch, Legal and Information Control Depa[redacted]

OAK RIDGE NATIONAL LABORATORY
OPERATED BY
UNION CARBIDE NUCLEAR COMPANY
UNION CARBIDE
POST OFFICE BOX X
OAK RIDGE, TENNESSEE

April 11, 1963

To: Distribution Listed in ORNL-TM-540

A draft copy of Nuclear Safety, Vol. 4, No. 4, is being transmitted to each Technical Information Panel member, as well as to others concerned with the review for patent, classification, and administrative matters. If you have any comments or criticisms concerning the contents of this issue, please send copies to Mr. Thomas W. Hazard of DTI and Mr. H. F. Carroll of Declassification and to me. Inasmuch as the final draft of this issue is scheduled to go to press early in June, your comments will have to be received by May 20 in order to be considered for inclusion in the final publication. Mr. Hazard's and Mr. Carroll's addresses are as follows:

Mr. Thomas W. Hazard
Industrial Information Branch
Division of Technical Information
U.S. Atomic Energy Commission
Washington 25, D.C.

Mr. H. F. Carroll
Declassification Branch
Division of Classification
U.S. Atomic Energy Commission
Oak Ridge, Tennessee

Yours truly,

Wm. B. Cottrell by Ace S

Wm. B. Cottrell
Editor, Nuclear Safety

ORNL-TM-540

Contract No. W-7405-eng-26

DRAFT

TECHNICAL PROGRESS REVIEW
NUCLEAR SAFETY

Volume 4, No. 4

Prepared for U.S. Atomic Energy Commission
by Oak Ridge National Laboratory

DATE ISSUED
APR 29 1963

OAK RIDGE NATIONAL LABORATORY
Oak Ridge, Tennessee
operated by
UNION CARBIDE CORPORATION
for the
U.S. ATOMIC ENERGY COMMISSION

FOREWORD

This quarterly journal is one of a series of Technical Progress Reviews prepared by the Oak Ridge National Laboratory at the request of the Division of Information Services, U.S. Atomic Energy Commission. This Review is intended to assist those interested in keeping abreast of significant developments in the field of nuclear safety. Nuclear Safety is not a comprehensive abstract of all literature published in this field during a given quarter, but rather a mechanism for presenting concise reviews of selected subjects as prevailing interest and available information warrant.

Coverage of the Review is limited to topics relevant to the analysis and control of hazards associated with nuclear reactors, operations involving fissionable materials, and the products of nuclear fission. Primary emphasis is on safety in reactor design, construction, and operation; however, safety considerations in reactor fuel fabrication, spent-fuel processing, nuclear waste disposal, and related operations are also treated. Safety in the use of radioisotopes in industry, medicine, and research is excluded, as are most topics considered the province of health physics. Even with these exclusions, nuclear safety cuts across such diverse fields as nuclear physics, solid-state physics, mechanics, chemistry, meteorology, geology, seismology, metallurgy, law, and nearly all branches of engineering. The authors will therefore review material from these fields which, in their opinion, has a direct bearing on nuclear safety.

Three distinctly different types of articles may be found in this issue of Nuclear Safety. In addition to the usual reviews of current

literature and special review articles on specific topics, this issue contains the third of a new series of feature articles. The feature article is a solicited monograph by a nationally recognized expert on particulate topics of interest selected by the editors.

The special articles permit discussion of pertinent subjects that cannot be adequately considered by reference to only the current literature. The current review articles, however, constitute the major portion of this publication. All incoming literature (including reports, books, American and foreign technical journals, and transactions) is examined for subjects within our area of interest. This material is collected, grouped, and reviewed by experts. With the possible exception of the invited articles, interpretations in any article represent the opinions of the editors, who are employees of the Oak Ridge National Laboratory. Readers are urged to consult the references to original work for more complete information.

It is recognized that the critical evaluation of subject areas leading to the determination of criteria cannot fail to stimulate contrary opinions. This is expected to be particularly true in the area of nuclear safety, since in many instances only preliminary information is available, the ramifications are many and varied, and opinion and judgment must be relied upon so heavily. While the editors do not propose that the pages of Nuclear Safety act as a clearing house for safety correspondence because of the above facts, we have had for some time a policy which would permit the publication of statements of position at variance with those expressed by the editors. Such statements will be published after

the editors have ascertained that a real difference exists and that the position is reasonable.

In addition to the invited contributors, many members of the Oak Ridge National Laboratory staff wrote review material, reviewed manuscripts, or otherwise contributed to this publication. Their contributions are gratefully acknowledged.

W. B. COTTRELL, Editor
W. H. JORDAN, Associate Editor
F. T. BINFORD, J. R. BUCHANAN,
K. E. COWSER, E. E. GROSS, C. E. GUTHRIE,
A. W. SAVOLAINEN, and C. S. WALKER, Assistant
Editors, Oak Ridge National Laboratory

TECHNICAL PROGRESS REVIEW

Nuclear Safety

Foreword ii

Feature Article

The Reliability of Reactor Control Systems 2

I. General Safety Criteria

Site Criteria for Reactors with Multiple Containment 4

Third Report of the Federal Radiation Council 20

Radioisotope Source Testing and Handling 26

Packaging and Regulation Standards for Shipping Radioactive Materials 32

Safety in Gas-Cooled Power Reactors 42

References 43

II. Accident Analysis

Central Melting in UO_2 Fuel Elements 50

Stored Energy in Reactor Materials 56

In-Pile Loop Hazards 64

Fission-Product Release from UC Fuels 65

Loss-of-Coolant Accidents in Gas-Cooled Reactors 66

Integrity of Reactor Fuels 67

References 68

III. Control and Instrumentation

Reliability of Reactor Systems 71

Control Rod Drives 83

Relative Functions of Loop Containment and Instrumentation 95

In-Core Temperature Measurement 99

References 100

IV. Plant Safety Features

Leak Tests of Containment Vessels 104

Criticality Control in Fuel-Processing Plants 110

Containment of Gas-Cooled Power Reactors 118

Emergency Decontamination Procedures at Chalk River 119

References 120

V. Consequences of Activity Release

World-Wide Radioactive Fallout from Nuclear Tests 124

Dosimetry and Exposures in Nuclear Accidents 144

Selection of Samples for Area Monitoring 147

Ruthenium: A Special Safety Problem 148

Estimation of MPC Values for Mixtures of Radionuclides ... 149

References 150

VI. Current Events

Homogeneous Reactor Experiment No. 2 Operating Experience 155

Accidents in Nuclear Energy Operations 156

Van de Graaff Electron-Beam Exposure at Sandia Corporation 171

Action on Reactor Projects by Licensing and Regulating Bodies 177

Changes in Licensing Regulations 196

Safeguards Reports and Selected Reading 200

References 205

FEATURE ARTICLE

THE RELIABILITY OF REACTOR CONTROL SYSTEMS

(Held over from Vol. 4, No. 3)

I. GENERAL SAFETY CRITERIA

SITE CRITERIA FOR REACTORS WITH MULTIPLE CONTAINMENT

[Editor's Note: Most of the material in this article was prepared by Dr. W. K. Ergen* for the International Atomic Energy Agency's symposium on "Criteria and Guidance in the Selection of Sites for the Construction of Reactors and Nuclear Research Center." It is published here, with the permission of IAEA, because of the significance of this subject to the nuclear power industry in the United States. The editor has added a few points and made some editorial changes.

Dr. Ergen is able to provide insight into the somewhat nebulous problem of site selection and to show how engineered safety features, such as iodine-removal facilitated by multiple containment and filters, are being employed to effect a reduction in the "separation" distances indicated in the Site Criteria Guide published by the U.S. Atomic Energy Commission.]

The criteria established for assuring safety at a power-reactor site are usually dominated by concern about radioactive pollution of the atmosphere in the case of the "maximum credible accident," which is assumed to involve extensive meltdown or vaporization of the core. In the United States, criteria determined on this basis are set forth in the Code of Federal Regulations[1] and supplemented by an AEC report[2] that describes the calculation of distance factors. These documents define an exclusion area in which residence will normally be prohibited; a low-population zone, the inhabitants of which are subject to protective measures such as evacuation; and a population-center distance that is the

---

*William K. Ergen was born in Vienna, Austria, where he took his Ph.D. degree at the University of Vienna. He worked at Western Reserve University, Cleveland, Ohio, and the University of Wisconsin, Madison, Wisconsin, on uranium chemistry and then at the Minneapolis Honeywell Regulator Co. and the Radio Corporation of America on control devices. He came to Oak Ridge, Tennessee, in 1947, with the NEPA project. Since he joined the Oak Ridge National Laboratory, in 1951, he has worked mostly on reactor dynamics, reactor physics, and nuclear safety. He is at present a member of the U.S. Atomic Energy Commission's Advisory Committee on Reactor Safeguards.

distance to the nearest boundary of a densely populated center. The following minimum values for the radii of the exclusion area and the low-population zone and for the population-center distance can be computed based on assumptions stated explicitly in the AEC document:*

Radius of exclusion area = 11 × (reactor power)$^{2/3}$
Radius of low-population zone = 161 × (reactor power)$^{2/3}$
Population-center distance = 215 × (reactor power)$^{2/3}$

The distances are in meters and the reactor power is in thermal megawatts. These relations are plotted in the "distance graphs" of Figs. 1 and 2 of ref. 2. It is clear in the documents referenced[1,2] that many factors enter into the determination of the suitability of a site and that "applicants are free and indeed encouraged to demonstrate to the Commission the applicability and significance of considerations other than those set forth in the guides." The power level for which a given reactor is suitable on a given site has to be determined on an individual basis. This power level may deviate from the power determined by the above relations by a "safeguard factor." This factor could be smaller than one, if the reactor's engineered safeguards were less than those assumed in

*For instance, the AEC report[2] suggests containment of the reactor that permits maximum leakage after the maximum credible accident of 0.1% per day of the reactor's rare-gas inventory and 0.025% per day of the halogen inventory. Other radioisotopes are assumed to be held up sufficiently so that their contribution to the hazard is of no concern. The gamma dose from fission fragments dispersed in the containment vessel by the postulated accident is disregarded in this article because this dose can be eliminated by shielding. An individual located at the boundary of the exclusion area is assumed to be exposed to the consequences of the accident for 2 hr immediately following the onset of the postulated fission-product release (thereafter the protective measures would have taken effect), whereas an individual located at the outer boundary of the low-population zone is assumed to be exposed to the postulated fission-product release during the entire period of its passage. The population-center distance is 1.33 times the low-population-zone radius.

ref. 2, and it could be greater than one if the engineered safeguards of the individual reactor exceeded those assumed in the AEC document. For the purpose of discussion of a specific engineered safeguard, it is, in principle, possible to talk about the safeguard factor associated with this specific safeguard feature. This permits comparison between a reactor incorporating the feature and a reactor without it. In practice, the situation is more complicated, but the concept of the safeguard factor associated with a specific safeguard is useful.

Multiple containment is one of the devices used to drastically reduce the release of iodine, and it can also introduce a delay in the release of rare gases. If it operates as intended, it makes a given site suitable for a higher reactor power than the "standard" containment vessel on which the present U.S. site criteria are based. In addition, refinements in the calculation of submersion exposures have resulted in lower close-in exposures than heretofore calculated. The general principles involved in multiple containment are discussed here. Specific examples are given with respect to the following reactors: the Consolidated Edison thorium reactor; the N.S. SAVANNAH reactor; the reactor recently proposed by the City of Los Angeles, Department of Water and Power; the reactor proposed by the Consolidated Edison Company of New York; and the very large reactors proposed for desalting sea water.

Iodine and Noble Gas Exposures

In order to place reactors in regions more populated than compatible with the present criteria, consideration has been given to drastically reducing the possibility of iodine release. The potential air pollution

would then be dominated by the rate gases, at least under the assumptions of ref. 2 with respect to radioisotope release. The rare gases constitute a submersion-exposure hazard; that is, an individual immersed in the cloud of radioactive rare gases would receive radiation from the cloud's atoms.

Release of the radioactivity is assumed to occur at ground level, and the radioactive cloud is narrow at the source. As the cloud reaches greater and greater distances from the source, it spreads more and more. For any given distance from the source, there is a point of maximum concentration and, corresponding to the spreading, the maximum concentration decreases with increasing distance. It is mathematically simple to compute the dose to an individual as if he were immersed in a semi-infinite cloud of constant concentration. This concentration is assumed to be the maximum concentration at the actual distance of the individual from the source. The semi-infinite cloud concept would apply if the individual were standing on a flat surface, with the cloud above him and no radioactivity below him, and if the ground scattered radiation to the same extent as the atmosphere.* This simple procedure overestimates the exposure because the conservative assumptions regarding the meteorological conditions at the time of the accident imply relatively large centerline concentrations, which are obtained only in very narrow clouds.

---

*The semi-infinite cloud is used here because of a corresponding assumption in the iodine-dose calculations of ref. 2. For a given release of radioactive material, the concentration in a semi-infinite cloud is twice as high as the concentration in an infinite cloud; however, an individual immersed in a semi-infinite cloud receives radiation only from above, whereas an individual in an infinite cloud receives radiation from above and below. Thus the semi-infinite cloud and the infinite cloud actually give the same dose.

If the simple procedure is used, the dose rate, in rems/sec, is

$$D_\gamma = 0.26\ EX\ ,$$

where E is the effective energy in Mev per disintegration and X is the concentration in curies per cubic meter.[3] (In order to make a consistent presentation, the units and the numerical factor in Burnett's[3] equation were changed to agree with those of ref. 4.) For any given isotope, the concentration X_i is given by

$$X_i = 0.865 \times 10^6\ P_o \gamma_i F \lambda_1 B\ e^{-\lambda_{ri} t}\ ,$$

where

P_o = reactor power, in Mw,

γ_i = fission yield of the isotope,

F = fraction of the isotope inventory available for leakage from the reactor building (assumed to be 1 for rare gases),

λ_1 = fractional rate of leakage from the reactor building to the atmosphere, in sec^{-1},

λ_{ri} = radiological decay constant of the isotope, in sec^{-1},

t = time since shutdown of the reactor, in sec,

B = distance-dependent dilution factor giving the concentration in curies per cubic meter caused by the leakage of 1 curie/sec from the reactor building.

Infinite reactor operation prior to the shutdown is conservatively assumed and λ_{ri} is assumed to be $\gg\lambda_1$, as it is, indeed, for the isotopes of interest. ($\lambda_{ri} \gg \lambda_1$ means that decay is more important than reduction of the inventory by leakage from the containment.)

Thus, the dose rate caused by the rare gases is

$$D_\gamma = 7.0 \times 10^{-12}\ P_o \lambda_1 B \sum S_{oi}\ e^{-\lambda_{ri} t}\ ,$$

where

$$S_o = 3.2 \times 10^{16}\ E\gamma$$

is the initial source strength of the isotope in question in Mev/sec·Mw. The S_o values are tabulated in ref. 2 (Table IV, p. 27, column 4) and are based on the work of Blomeke and Todd.[5]

The dose rate must be integrated over the time during which an individual located at the outer boundary of the exclusion area or of the low-population zone is exposed to the radioactive cloud. If no significant time delay occurs between the shutdown of the reactor and the moment at which the cloud reaches these boundaries, the integral over the time-dependent exponential becomes $(1 - e^{-7200\lambda_{ri}})/\lambda_{ri}$ for the postulated 2-hr exposure at the exclusion-area boundary; for long exposure at the boundary of the low-population zone, the integral is essentially $1/\lambda_{ri}$.

If a delay in fission-fragment release from the reactor building in excess of 2 hr could be assured, the individuals in the low-population zone could presumably be evacuated and the low-population zone could be extended inward until the external gamma-radiation dose from fission products contained in the reactor building would reach 25 rem during the first 2 hr after the incident. Since the reactor building could be shielded to any desired extent, the inner boundary of the low-population zone (or outer boundary of the exclusion area) would lose much of its meaning. For the determination of the outer boundary of the low-population zone, the integrated dose rate becomes $e^{-\lambda_{ri}\tau}/\lambda_{ri}$ if no radioactivity

is released prior to time τ (in sec) following the accident and if after this time the fractional rate of leakage λ_1 applies. More precise delay models have been investigated by Anderson.[6]

Numerical evaluation yields, for the case of no delay in the release,

$$D_\gamma = 1.51 \times 10^8 \, P_o \lambda_1 B$$

for the exclusion area boundary. Two-thirds of this dose is contributed by Kr^{88}. For the outer boundary of the low-population zone,

$$D_\gamma = 12.56 \times 10^8 \, P_o \lambda_1 B \; ;$$

62% of this is contributed by Xe^{133} and 20% by Kr^{88}.

For iodine, it follows, from ref. 2, Eqs. 1 and 9, that the dose to the thyroid is given by

$$D_\infty = P_o BR \sum Q_{\tau i} (D_\infty / A_\tau)_i \; ,$$

where R is the breathing rate, which is assumed to be 3.47×10^{-4} (m^3/sec) for the exclusion zone and 2.32×10^{-4} (m^3/sec) for the low-population zone. The expressions Q_τ and (D_∞/A_τ) are defined in ref. 2 and their values are tabulated in Tables II and III, respectively, of ref. 2. The values are based on the assumption that one-fourth the iodine inventory is available for leakage from the reactor building and that the leak rate from this building is 0.1% per day. The subscript i is used here to distinguish the various iodine isotopes.

The summation $Q_{\tau i}(D_\infty/A_\tau)$ is 1.4×10^6 rads/Mw for the exclusion zone and 116×10^6 rads/Mw for the low-population zone. Thus the dose to the thyroid is

$$D_\infty = 4.19 \times 10^{10}\ P_o \lambda_1 B$$

for the boundary of the exclusion zone and

$$D_\infty = 232 \times 10^{10}\ P_o \lambda_1 B$$

for the outer boundary of the low-population zone.

In the reactor site criteria, a 300-rem dose to the thyroid is used in the same context as a whole-body dose of 25 rem. It is thus of interest to compare 25/300, or 1/12, of the thyroid dose with the whole-body dose. From the above it may be seen that

$$(1/12)\ D_\infty/D_\gamma = 22.9$$

for the exclusion radius and

$$(1/12)\ D_\infty/D_\gamma = 153$$

for the outer boundary of the low-population zone. These ratios are independent of the power level, the assumed leak rate, and the dilution factor B. A given location that the distance graphs regard as compatible with a power level P_o would be compatible with a power level that exceeded P_o by a safeguard factor. This factor is 22.9 if the exclusion radius is limiting and 153 if the radius of the low-population zone is the determining item. Similar calculations have been made by Binford.[7]

As previously mentioned, the factor could be still higher, because the assumption of a semi-infinite cloud is unduly conservative. Finite-cloud external gamma doses can be found from the nomograms in Meteorology and Atomic Energy,[4] Chapter 8, Section 3. These nomograms are based on the assumption that all fission fragments, not only the rare gases, are released. Anderson and his co-workers[8] have used these nomograms to compute the ratio of the finite-cloud doses to the doses resulting from an

infinite cloud under the assumed meteorological conditions of ref. 2. At 300 m from the source, the finite-cloud dose is only one-tenth of that resulting from an infinite cloud, and closer to the source, the ratio of the doses from finite and infinite clouds is still smaller.

If holdup of the fission fragments in the containment vessel is provided, the exposure from the rare gases is also reduced by radioactive decay. After a few days following the postulated release, this decay is controlled by the 5.27-d Xe^{133}, until, finally, longer lived rare gases become dominant.

In summary, a given site would become compatible with a much higher power level than that given by the distance graphs if the iodine could be eliminated. The large factors by which the power level might thus be increased are contingent on the confidence that can be placed on the containment of iodine and other fission fragments, such as particulates.

Multiple Containment

As discussed in the preceding section, the potential consequences of an accident can be greatly reduced by (1) drastically reducing the radioiodine content of the effluent from the containment vessel and (2) providing a time delay between the accident and the release of any effluent to allow the rare gases to decay. One of the most effective and most frequently proposed means to accomplish these two objectives is multiple containment. In its simplest form, the multiple-containment scheme incorporates two barriers around the core. This provides three zones: (1) the "inner" zone inside the inner barrier, which contains the core and would be heavily contaminated by the postulated accident;

(2) the "intermediate" zone between the two barriers; and (3) the outside atmosphere surrounding the outer barrier.

The intermediate zone is kept at "negative" pressure, that is, at a pressure below the pressure in the inner zone and below the pressure of the outside atmosphere. The barriers are made as leaktight as reasonably possible, but there will be some leakage. This leakage will be into the intermediate, negative-pressure zone, and theoretically there should be no uncontrolled leakage from the contaminated inner zone to the outside atmosphere.

In order to maintain the intermediate zone at the negative pressure in spite of the inleakage, some gas has to be pumped from this space. This gas will be contaminated because it will contain whatever leakage occurs from the inner space. Two possible means have been proposed for disposal of the contaminated gas:

1. Release to the atmosphere after filtration of the iodine. The inner barrier protects the filters from high temperature, and the filters only have to handle the relatively small amount of fission fragments leaking through the inner barrier. Under these circumstances the filtration can readily be performed with high efficiency, and the iodine content can usually be reduced to the point where the rare gases become the dominant hazard. The filters can, of course, also be designed to remove, with high efficiency, other fission fragments, such as cesium and strontium, making the assumption of negligible release of these isotopes more realistic. Retention of the rare gases on refrigerated charcoal or other filtering agents would be possible, but so far this has not actually been done.

The release of the rare gases from an elevated stack, with possibly some additional dilution and some delay on the path from the reactor to the top of the stack, offers some advantage over and above that resulting from the fact that the rare gases are less harmful than the radioiodine. The inherent limitation of this scheme is that the remaining exposure from the rare gases must be within acceptable limits.

2. Storage of the contaminated gas on the site. This could be accomplished, for instance, by pumping the gas back into the inner zone, since this is a large volume and readily available. There would be some leakage from the outside atmosphere into the intermediate zone, and this leakage would be pumped into the storage volume. This would increase the pressure in the storage volume, and since there would be an upper limit on the pressure for which the storage volume was designed, there would be an inherent limitation on the duration of storage. When the pressure reached the design limit, some relief to the atmosphere would be necessary, unless additional storage space was provided by that time. Even if the radioactive effluent could not be held up indefinitely, the delay, coupled with filtering, dilution, and ultimate release at stack height, would provide a significant "engineered safeguard."

The two proposed methods of disposal of the contaminated gas from the intermediate space can, of course, be combined; that is, holdup as long as the activity is too high or the meteorological conditions for dispersal are unfavorable and release whenever possible in order to extend the time after which release would be a necessity.

In any case the multiple containment scheme described depends for proper functioning on the operation of the blowers that maintain the

negative pressure in the intermediate space. These blowers have to function for a long time after the accident. Redundancy and the utmost reliability are required. Even if the blowers fail, however, some benefit will be derived from the multiple containment, because the small leakage from the inner zone and the outer atmosphere into the intermediate zone will require some time to bring the intermediate zone to a positive pressure. It is clear that a large intermediate zone volume and small rates of leakage into this volume are assets for a multiple-containment system.

Schemes other than multiple containment have been suggested for the reduction of radioiodine and other radioactive fission fragments. Among these are internal air circulation and purification and spray or chemical decontamination. What equivalent credit can be given to these schemes has not yet been determined.

Specific Proposals for Multiple-Containment Reactors and Their Sites

The Consolidated Edison thorium reactor at Indian Point, N.Y., was the first large reactor designed to use the multiple containment scheme.[9] In this installation a "conventional" high-integrity containment vessel is surrounded by an additional concrete shell. The main purpose of the concrete shell was to provide shielding from the gamma rays emitted inside the high-integrity containment vessel by radioactive isotopes that would be released during the postulated maximum credible accident. There is an intermediate space between the high-integrity containment vessel and the concrete shell that can be operated at a negative pressure by exhausting air from it through a filter and a high stack. The filter is

actually an "absolute" filter that was designed to retain particulate matter and not specifically iodine. When the distance graphs were developed long after the plant had been designed, however, it was found that the site met the requirements of low-population area and the population-center distance without credit for the multiple-containment feature. With respect to the exclusion area, the multiple-containment feature is called upon only to justify a safeguard factor of 2.

The N.S. SAVANNAH also has a high-integrity containment vessel surrounded by the reactor compartment, which can be kept at negative pressure by exhausting air through a filtration system, including iodine filters.[10,11] Inasmuch as a nuclear vessel is necessarily close to populated areas when in port, the multiple-containment features of the N.S. SAVANNAH were intended to compensate for its inability to meet the standard site criteria.

Recently, the Department of Water and Power of the City of Los Angeles proposed to build a reactor of about 1500 Mw(t) on a site at Corral Beach about 32 kilometers from Los Angeles.[12] (See discussion of this proposal in Section VI, Actions of Licensing and Regulating Bodies.) The population-center distance is 16 kilometers and the low-population zone radius is 8 kilometers. The shortest distance to a residence is 170 m, but there are few residences closer than 700 m, and if they do not interfere with the exclusion area, the low-population zone would limit the reactor power to ~350 Mw(t) except to the extent that engineered safety features might reduce the distance requirements. It is proposed that additional reactors be constructed later at the same site.

Two reactor and containment concepts for the Los Angeles reactor have been considered by the staff of the USAEC Division of Licensing and Regulation and by the Advisory Committee on Reactor Safeguards. One of these provides concentric steel shells surrounding the primary system. The space between the shells is filled with "popcorn" concrete, a form of concrete having many interconnected voids but considerable strength. These voids act as the intermediate zone discussed above. Outside the outer of the steel shells is a thick layer of reinforced concrete, which gives the whole structure mechanical strength and also acts as shielding from direct radiation.

The second concept involves pressure suppression[13] and a reasonably leaktight containment building. In the pressure-suppression system, a pool of water is provided in which the steam released by the postulated accident is quenched. The postaccident pressure is thus drastically reduced. The pool is always there and there is no dependence on spray systems that would have to be started after the accident. Also, the intermediate zone, that is, the space between the pressure-suppression system and the surrounding containment building, has a very large volume. The primary system extends outside this multiple containment system, however, through a long steam pipe, the turbine, and the condenser. In the case of a nuclear excursion that would release high-pressure steam and radioactivity simultaneously, the isolation valves designed to shut off the containment vessel from the exterior primary piping would be required to close fast and tightly. Therefore some containment provision for the external part of the primary system has been proposed.

The Consolidated Edison Company of New York, Inc.,[14] proposes to construct and operate a 2000-Mw(t) nuclear steam-generating unit at its Ravenswood site inside the New York metropolitan area. The population-center distance would be 100 m. In other words, almost complete reliance would be placed on engineered safeguards. The proposed reactor is of the pressurized-water type and is to be housed in a structure similar to the concentric shells discussed above in connection with the Los Angeles reactor.

The Los Alamos Scientific Laboratory and the Oak Ridge National Laboratory are considering the use of very large reactors, up to 1000,000 Mw(t), as sources of process heat for the desalting of sea water.[15] Assuming that the distance graphs could realistically be extrapolated to such high power levels, they would indicate, for a 1000,000-Mw(t) reactor, an exclusion radius of 15 miles, a low-population zone radius of 215 miles, and a population-center distance of 288 miles. These distances are obviously prohibitive. Independent units of 25,000 Mw(t) could, however, be used, and if double containment justified a safeguard factor of 20, the exclusion radius would shrink to 0.8 miles, the low-population zone radius to 12 miles, and the population-center distance to 16 miles. An important feature of these reactors is that their output, the fresh water, is storable, and hence shutdown of the reactors could be tolerated more easily than by a producer of electric power; further, the reactors could run at constant power. This might result in simplifications of the control circuit;

for instance, shutdown xenon would not have to be overridden and no rapid load changes would have to be followed.*

---

*The views expressed in this paper are not necessarily those of the USAEC Advisory Committee on Reactor Safeguards of which Dr. Ergen is presently a member.

THIRD REPORT OF THE FEDERAL RADIATION COUNCIL

W. S. Snyder

Report No. 3 of the Federal Radiation Council (FRC) entitled "Health Implications of Fallout From Nuclear Weapons Testing Through 1961" was a timely report on the health hazards of fallout, since its publication date, May 1962, followed shortly after the resumption of weapons testing by the U.S. Unlike its two predecessors, Report No. 3 does not formulate directives to federal agencies, and the general character of the report suggests that it might have been addressed as much to the public as to the policy-forming officials of the government. There is a welcome departure from the previous policy of anonymity; credit is given to a panel of consultants selected by the National Academy of Sciences consisting of Drs. Howard L. Andrews, Victor P. Bond, James F. Crow, Lester Machta, James V. Neel, William L. Russell, and Shields Warren. Every person interested in the subject will welcome this careful review in simple, nontechnical language. As usual with FRC reports, there is no documentation of the sources of the data used in arriving at the conclusions; however, the report does contain a wealth of interpretive comment and evaluation. Perhaps the most notable features are the tables giving detailed estimates of typical radiation doses to inhabitants of the U.S. as a result of weapons testing through 1961 and estimates of the genetic and somatic sequelae that might be expected to result from these doses. Although such estimates are largely speculative, involving many assumptions concerning the distribution of doses in the population and the dose-response curve at very low levels of dose and dose rate, it is valuable to have readily available the considered estimates of such a group of experts.

After a short introduction, the more important sources contributing to the radiation dose from fallout are discussed briefly. Table I (reproduced from the Council report) gives estimates of dose to the whole body, to reproductive cells, to bone, and to bone marrow resulting from weapons tests through 1961. Doses to reproductive cells and to the whole body are given as an average for the entire population, but doses to bone and bone marrow are average values for those who were infants at the time of highest concentration of the particular isotope irradiating these organs. Some of the estimates appear to be rather high when compared with other estimates, for example, the Report of the United Nations Scientific Committee on the Effects of Atomic Radiation (1962). One member of the staff told the reviewer that, in preparing the report, the staff did attempt to use assumptions that would overestimate doses and effects. In the absence of documentation, it is difficult to decide how great this bias might be. For comparison, the table also gives typical doses from natural background and the FRC's radiation protection guides for normal peacetime operations. The report indicates that radioactive iodine was omitted because the radioactive half-life is only 8 days and thus the peak dose rates quickly decrease following a test series. Although this would result in a greater spread of individual dose values and certainly would make the task of evaluation more difficult, it is to be regretted that the report omits from consideration one of the principal contributors to the total dose.

Table II (reproduced from the Council report) details the estimates of the effects of fallout on the number of gross physical or mental defects in future generations in the U.S. The fact that these estimates

TABLE I

Estimated Radiation Doses in the United States

(Doses expressed in millirem)

Tissue or organ	From all tests through 1961	From natural background	FRC Radiation Protection Guides* for normal peacetime operations Population groups
Whole body			
1 Year	10- 25	100	170
30 Years	60-130	3,000	5,000
70 Years	70-150	7,000	11,900
Reproductive cells			
1 Year	10- 25	100	170
30 Years	60-130	3,000	5,000
70 Years	70-150	7,000	11,900
Bone			
1 Year	30- 80	130	500
70 Years	400-900	9,100	35,000
Bone marrow			
1 Year	20- 40	100	170
70 Years	150-350	7,000	11,900

*The Radiation Protection Guide for whole-body exposure of individual radiation workers is 5,000 millirems per year.

TABLE II

Effect of Fallout on the Number of Gross Physical or Mental Defects in Future Generations in the United States

(No allowance has been made for future increases in population)

(1) Estimated number of cases due to all causes (hereditary and non-hereditary) in children of persons now living	(2) Estimated number of additional cases in the first generation (children of persons now alive) caused by all tests through 1961		(3) Estimated total number for all future generations from all tests through 1961		(4) Risk to an individual of the next generation from all tests through 1961
	Fallout	Carbon-14	Fallout	Carbon-14	
4,000,000-6,000,000	100 Range (20-500)	10 (2-50)	1,000 (200-5,000)	2,000 (400-10,000)	1/1,000,000

The upper figures in columns 2 and 3 are best estimates based on radiation-induced mutation rates in mice, and on the spontaneous incidence of these defects in man.

The lower sets of figures represent the range within which the true value may reasonably be expected to lie.

TABLE III

Certain Malignant Diseases in the Next Seventy Years in the United States

	Estimated total number of cases from all causes (present incidence)	Estimated number of cases caused by natural radiation	Estimated number of additional cases from all tests through 1961	Risk to an individual of developing the disease due to all tests through 1961
Leukemia.....	840,000	0-84,000	0-2,000	0-1/100,000
Bone Cancer	140,000	0-14,000	0-700	0-1/300,000

are given separately for C^{14} and for other radionuclides is commendable, since the distribution of the effects in time is markedly different. The total number of defects resulting from exposure to C^{14} from fallout is about double the estimate of such defects from other fallout, but because of the very long radioactive half-life of C^{14}, this damage is spread over many thousands of years, whereas the occurrence of defects resulting from exposure to other radionuclides will decrease markedly in a few generations. Table II gives "best estimates" as well as the "range within which the true value may reasonably be expected to lie." The "risk to an individual of the next generation [in the U.S.] from all tests through 1961" is estimated to be 1/1,000,000.

Table III (reproduced from the Council report) describes somatic damage, but only leukemia and bone cancer are included in the estimate. Cancer of the thyroid is excluded "because estimates, like those recognized by national and international groups of scientists for possible leukemia and bone cancer effects, have not been made for cancer of the thyroid." The report, however, considers the incidence of thyroid effects to be about the same as for other malignancies for comparable exposure. Table III gives, for the U.S., the estimated number of cases of leukemia and bone cancer from all causes, the estimated number of cases resulting from natural background radiation, and the estimated number of additional cases from all tests through 1961. The risk of leukemia from the fallout is estimated to be zero to 1/100,000 and the risk of bone cancer to be zero to 1/300,000.

As is to be expected when a large population is exposed, the estimated number of cases may sometimes seem rather large. The comparisons with

natural incidence and the estimated effects of the natural background help to give perspective. The judgments arrived at are summarized in the conclusions, which are quoted below:

> "We cannot say with certainty what health hazards are caused by fallout from nuclear testing. We expect there will be some genetic effects; other effects such as leukemia and cancer are more speculative and may not occur at all. We can observe that, compared to the number of these same adverse biological effects occurring wholly apart from testing, the additional cases that might be caused by testing are a very small quantity. We conclude that nuclear testing through 1961 has increased by small amounts the normal risks of adverse health effects."

RADIOISOTOPE SOURCE TESTING AND HANDLING

R. A. Robinson H. F. McDuffie

The use of radioisotope sources continues to expand. During the fiscal year 1962, the Oak Ridge National Laboratory sold about 540,000 curies[16] of radioisotopes in or for sources, which is to be compared with 289,000 curies[17] in the fiscal year 1960. Safety in source handling is thus becoming increasingly important. The prime factors in source handling for safe operation are (1) maintaining the integrity of the source and (2) adequate safeguards and shielding. The safety aspects of fabrication and handling were discussed in previous Nuclear Safety reviews,[17,18] and recent developments in these areas are covered in this review.

Source-Testing Program

A meeting sponsored by the Isotopes Development Division of the AEC was held in Washington, D.C., on November 8, 1962 to discuss a sealed-source-testing program presently being carried out by the Isotopes Development Center at the Oak Ridge National Laboratory. Sixty-one people attended, including representatives from 30 companies engaged in the manufacture or use of sealed sources, representatives from the AEC divisions of Isotopes Development, Licensing and Regulation, Compliance, and Radiation Standards, and representatives from other interested groups, such as the National Bureau of Standards, American Standards Association, American Society for Testing Materials, Underwriter's Laboratories, Battelle Memorial Institute, and the Oak Ridge National Laboratory.

The main purpose of the meeting was to acquaint the various groups with the reasons for and the objectives of the source-testing program and to describe some of the work that has been done to date. Five states are in the process of assuming some of the regulatory functions previously administered by the AEC with respect to the possession and use of radioactive materials, and it is hoped that the source-testing program will provide a basic system of classifying and rating sealed sources that will assist in establishing uniform standards and design requirements among the various federal and state regulatory agencies. This in turn will help to ensure that the excellent safety record built up by sealed-source manufacturers and users will be maintained in the future when regulatory functions pass from the hands of a single government agency to numerous state and local agencies.

R. A. Robinson of the Oak Ridge National Laboratory described a proposed sealed-source classification scheme in which sources would be classified according to their ability to maintain containment integrity when exposed to prescribed mechanical and environmental tests. Each source would have a composite classification consiting of a Roman numeral to indicate its ability to withstand mechanical abuse, such as vibration, pressure, impact, shearing, and puncture, and a letter designation to indicate its resistance to environmental conditions, such as temperature, humidity, chemical fumes, etc. It is also planned to develop a system by which sources can be rated from a hazard standpoint by assigning point values to such things as the type and amount of the radioisotope in the source, where and how it will be used, consequences of source failure, etc. This rating system could then be correlated

with the classification system so that a source having a particular rating would be in a definite class.

In order to determine what factors and the values of the factors to be used in classifying sources, numerous commercial sources are being subjected to mechanical and environmental tests at ORNL. K. W. Haff of ORNL described the types of tests being used and some of the test results. The tests included drop tests, puncture tests, hydrostatic pressure tests, tensile and shear strength tests, immersion in boiling water, immersion in body fluids (medical applicators only), exposure to steam, and various types of leak-detection tests. Atmospheric environmental tests are planned for the future, as well as numerous nondestructive tests that can be used for quality control by manufacturers.

The ORNL work on leak tests indicates that a vacuum leak test in which the source is placed in ethylene glycol and a 20-in. Hg vacuum is pulled above the liquid is much more sensitive for detecting small leaks than wipe tests, hot water bubble tests, and weight-gain tests under water pressure. The vacuum test is not satisfactory, however, when the free gas inside the source is not large enough to maintain a flow of bubbles when the vacuum is applied. Further work is planned to determine the limits of usefulness of this very simple leak test. Types of sources tested included radiographic, teletherapy, beta gages, tritium-activated paint, and several types of medical applicators. The testing of other commercial sealed sources is in progress, as well as the testing of some leaking sources that were sent to ORNL for disposal.

R. A. Ewing of Battelle Memorial Institute described an industrial survey now in progress for determining typical industrial environments

to which sources are exposed. To date, some 20 source-use sites have been visited, including paper, rubber, plastic, food, tobacco, and glass manufacturing operations, as well as both field and laboratory radiographic inspection facilities. No environmental extremes of temperature, pressure, or mechanical forces under normal use conditions were found at any of the sites visited. In most instances the maximum credible accident that might occur to the source involved fire or explosion, although in some instances the possibility of severe impact was evident. The environmental study is continuing, and the results will be combined with testing information to help determine values for the source rating system.

L. Horn of the Underwriter's Laboratories discussed the experience of independent testing laboratories in safety testing work and emphasized the need for balancing the unattainable state of absolute safety against commercially practical methods. He also pointed out that once satisfactory performance criteria had been determined, the establishment of standards usually followed and that advantage should be taken of the experience of the American Standards Association and other professional groups. A. D. Duff of DuPont cited the interest of the American Standards Association in the development of standards for sealed sources and described the procedures used in establishing standards.

During a panel discussion held after the formal presentations, ways of utilizing the years of experience of various manufacturers in the production and use of sources was discussed. It was agreed that if information now held by various manufacturers relating to the safety experience and integrity of various source designs could be assembled and made

available to those involved in the source-testing program, the development of a source classification and rating scheme would be greatly expedited. It was pointed out by several individuals that a uniform source-classification method is needed quickly to preclude the issuance of a variety of conflicting regulations from various state and local regulatory bodies.

Source Handling

Authoritative information on protection against radiation from sealed gamma sources is provided by the National Bureau of Standards Handbook 73 (ref. 19), a revision of its predecessor, NBS Handbook 54 (ref. 20). A careful distinction is made in Handbook 73 between mandatory recommendations (SHALL) and advisory recommendations (SHOULD), inasmuch as several states and local authorities base their protection codes on this NBS Handbook. Although the handbook is strongly biased toward teletherapy and other medical applications of gamma radiation, it is a very sound compilation of information. It contains appendices describing permissible RBE doses, barrier design and computations, encapsulation of sources, emergency procedures, and shielding rules.

A recent Czechoslovakian report[21] describes a special slide rule designed for determining rapidly the conditions under which radiation sources may be handled safely. Examples are given for the calculation of the shielding thicknesses for various materials and isotopes. Design details of the slide rule are presented, together with a table of shielding parameters for 36 isotopes.

An interesting lecture was given to a medical society by Newell[22] of the U.S. Naval Radiological Defense Laboratory, who discussed the

MPD (maximum permissible dose) and emphasized its importance, not as a health rule, but as an operating rule that should be "used simply to make the employer run his shop right." As indicated in previous Nuclear Safety[23,24] reviews of radiation incidents, as well as the current tabulation in this issue (see article in Section VI, "Accidents in Nuclear Energy Operations"), incidents involving sources continue to be major contributors to the total number of incidents, although they do not usually result in severe exposures. A combination of stricter administrative control, improved devices, and better instrumentation is generally warranted.

Perhaps the most significant opportunity for avoiding the consequences of unsafe source handling is afforded by the increasing availability of pocket-sized personnel radiation monitors, which give an audible signal of increasing frequency in the presence of increasingly high radiation fields.[25,26] The relatively low cost of such instruments compared with the total capital investment per employee for work with radioactive materials suggests that the use of such instruments should be expanded greatly.

PACKAGING AND REGULATION STANDARDS FOR SHIPPING RADIOACTIVE MATERIALS

K. W. Haff L. B. Shappert

A symposium on "Packaging and Regulation Standards for Shipping Radioactive Materials" was held at AEC headquarters at Germantown, Maryland, on December 3–5, 1962. This symposium, sponsored by the Division of Licensing and Regulation, Operational Safety, and Reactor Development of the U.S. Atomic Energy Commission, brought together those who have performed tests on radioactive material shipping containers and those who are responsible for approving containers for shipping radioactive materials to discuss their relationships in these areas, to promote general understanding of container design requirements, and to provide guidance for future testing programs. Approximately 180 persons from all areas of the nuclear community attended, and some 20 papers were presented and discussed.

The program was divided into three sessions: "The Transport Environment," "Regulatory Standards for Shipping Container Design," and "Testing Programs Related to Containers for Transportation of Radioactive Materials." The third session was concluded by a round-table discussion of the application of testing programs to regulatory standards. In the following reviews, each of the three sessions is discussed separately, and a detailed description of the shipping-cask-model testing program is presented.

The Transport Environment

The first session, "The Transport Environment," included discussions of the types and quantities of materials being shipped, AEC accident experiences, theoretical consequences of accidents, and operations research

analyses of safety considerations. The various AEC installations around the country make approximately 47,000 shipments of fission products, radioisotope materials, and spent fuel elements each year.[27] The largest of the shipments contained one million curies of fission products. The accident rate in the period 1957 to 1961 has been 0.17 accidents per thousand shipments; however, none of these accidents has been of any serious consequence.

Interstate Commerce Commission accident reports for trucks indicate that there are 3.6 accidents per million vehicle miles (111,120 accidents in 30,500 million vehicle miles over a four year period).[28] The transport of explosives and radioactive materials is included in these statistics, which showed variations from 2.4 to 5.2 accidents per million vehicle miles, mainly because of seasonal or cyclic regional highway differences. The accident rates also differ for daytime and nightime travel, being 2.9 and 4.3 accidents per million vehicle miles, respectively.

A classification system[29] for accidents was proposed in which accidents were categorized under the following six headings:

1. No release of contents and no contamination but suspected cask damage,
2. No release of contents but cask integrity breached,
3. Release of contamination to vehicle,
4. Release of contamination to the ground, no runoff and no fire,
5. Release of contamination with area dispersal caused by a fire,
6. Release of contamination which enters a water course.

Contamination of the atmosphere would be associated only with fire. It was reported that even if an MTR fuel element were exposed to a

temperature of 5000°F for 4 min, no significant contamination would be expected downwind. The radioactive constituents that could escape would be mainly I^{131}, Ru^{106}, and Cs^{137}, and they would be expected to constitute only 2% of the volatile material. Most of the radioactive material would be deposited within 300 ft downwind if there were a 15 mile/hr wind, and all should be deposited within 2000 ft.

The problems of disposal of liquid waste spilled on the ground by an accident would be a function of ground permeability, and the runoff would be a function of channeling of the liquid. The most serious accident would be the contamination of municipal water supplies.

Regulatory Standards for Shipping Container Design

The second session included discussions of current Interstate Commerce Commission regulations,[30] the proposed[31] U.S. regulations governing the transport of spent fuel elements, International Atomic Energy Agency regulations,[32] the development of transportation regulations in Canada, and the development of transportation regulations in the United Kingdom. These regulations are available through the proper governmental agencies and no discussions of them are included here.

The methods and problems in evaluating and approving casks by the regulatory agency were discussed.[33] Static methods are used primarily, with appropriate experience factors, and some experimental evidence is used to adapt the data to the dynamic problems encountered. Those who are responsible for approving shipping casks make a concerted effort to keep aware of developments in the various testing programs.

Tests of Containers for Transportation of Radioactive Materials

In order to ensure safe shipment of radioactive material, a shipping cask must be able to withstand any accident or impact to which it might be subjected. Since shipping casks have various shapes, several structural materials may be used, and the behavior of these materials under impact conditions may not be known, determinations of cask structural integrity cannot be made analytically. Rather, physical tests must be conducted.

Accordingly, the third session of the symposium included discussions of cask-testing programs being conducted in the United States and the United Kingdom. These programs include tests on existing casks,[34] tests of prototype casks,[35] tests of models,[36] and tests by fire.[37-39] The information and data collected to date indicated good agreement of the results obtained in the various test programs.

The results of tests of external energy sorption systems for large radioisotope shipping casks were discussed.[40] These units were quite satisfactory in meeting all AEC requirements,[31] except the drop onto a 6-in.-diam piston. No fire tests have yet been made on these casks. Other testing programs have indicated that there will be little difficulty with full-scale casks meeting any of the AEC requirements,[31] except the 6-in.-diam piston drop test and the 1-hr fire test for large casks. Smaller casks (1000 lb and less) can be inexpensively protected with wooden fire shields to meet the fire test requirements.

Little or no work has been done on the problems of cask tie-down and the role the tie-down system plays in preventing damage to a cask. A testing program is being planned to evaluate these and other factors in actual truck and train accidents.[41]

Shipping-Cask-Model Testing Program

One method that may be used to determine how a shipping container will behave under specific impact conditions is to construct a reduced-scale model of the cask and to test it under controlled impact conditions. The resulting deformation of the model cask should be indicative of the effects to be expected if a full-sized cask were put through the same test. This method has the advantage of being less expensive than destructively testing a full-scale shipping container and gives the designer some confidence in the behavior of the cask under actual impact conditions.

The validity of this approach is under investigation at the Oak Ridge National Laboratory and at the Franklin Institute.[36] Also, scale models of the HAPO I and II buffered cask are being tested at Hanford to verify the calculated behavior of the operational cask and buffer under impact conditions. The agreement of the calculated and experimental behavior has been quite good.

Several steel-shell, lead-filled, cylindrical casks weighing, nominally, 1.4 tons (2720 lb) were constructed by ORNL, and exact scale models of these casks were built and tested at the Franklin Institute.[36] The instrumentation on the cask and testing facility are shown schematically in Fig. I-1. The dimensions of the cask and model are listed below:

	Full Size	Model
Length, in.	36	9.864
Inside diameter, in.	18	4.932
Outside diameter, in.	10.25	2.809
Weight, lb	2720	55

The scale factor for the models is 0.274.

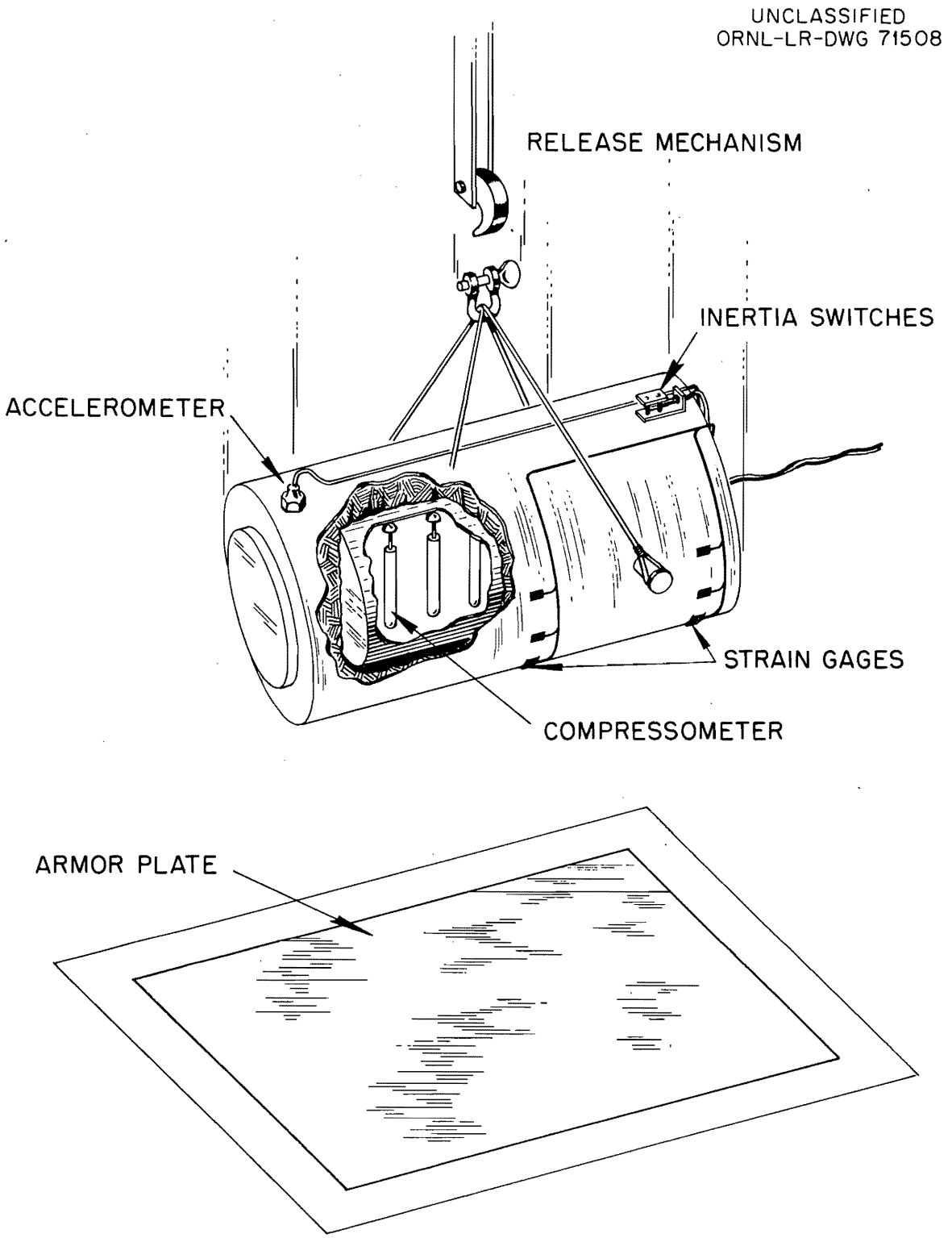

Fig. I-1. Cask Instrumentation and Test Facility.

Both the full-sized and model casks were put through the same series of tests, consisting of a horizontal drop from 15 ft, a corner drop from 15 ft, and several drops onto a cold-rolled steel piston from different heights. The results of the drops of the 1.4-ton cask and the 55-lb model are given in Tables I-1, I-2, and I-3.

It is evident that most of the measurements made on the scale model agreed quite well with and could have been used to predict the results for the full-sized 1.4-ton cask. The penetration tests did not agree as closely as might be desired, but it became evident from the first series of tests that the sharpness of the edge and the hardness of the piston affected the results. When a sharp-edged, hardened-steel piston was used in the model tests, the depth of penetration into the cask for the 3 1/2-ft drop increased almost 50%, which much more closely matched the results of the 1.4-ton cask.

Conclusions

Not only does model testing appear to be a valid method of predicting the impact results for a full-scale cask, but it also provides actual data with which to compare possible analytical solutions that might be of use. With the accumulation of data from the drops and the use of any analytical or empirical relationships that prove to be useful, casks could be designed that would be strong enough to withstand most transportation accidents and yet be economical to construct and ship.

There still remain four major problems in the cask-testing program. These are (1) determining the effects of fire and means for preventing damage to a cask and its contents by fire, (2) providing resistance to

Table I-1. RESULTS OF 15-ft TEST DROPS OF CASKS 2° FROM HORIZONTAL

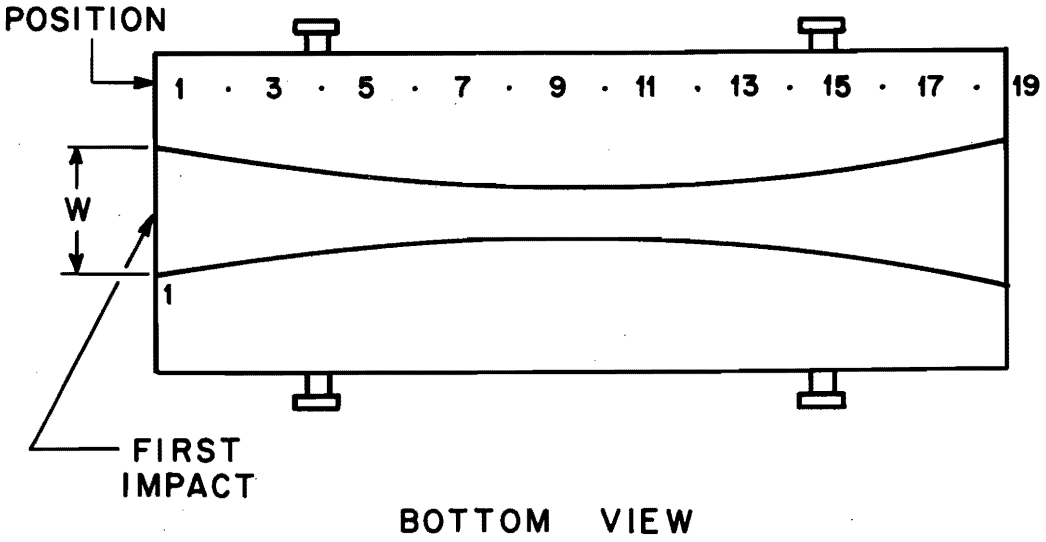

Position From Impact End	Width of Flattened Section from Impact End (in.)		
	Model Cask	Full-Size Cask	
		Predicted	Actual
1	1.454	5.31	5.25
2	1.100	4.02	4.62
3	1.040	3.80	3.75
4	1.000	3.65	3.37
5	0.910	3.32	3.25
6	0.840	3.07	3.12
7	0.840	3.07	3.00
8	0.840	3.07	2.87
9	0.770	2.81	2.75
10	0.770	2.81	2.62
11	0.860	3.14	2.75
12	0.870	3.18	3.00
13	0.880	3.21	3.00
14	0.870	3.18	3.25
15	0.930	3.39	3.50
16	0.990	3.61	3.50
17	1.090	3.98	4.00
18	1.090	3.98	4.75
19	1.234	4.50	4.75

Table I-2. RESULTS OF 45° CORNER DROP OF CASK

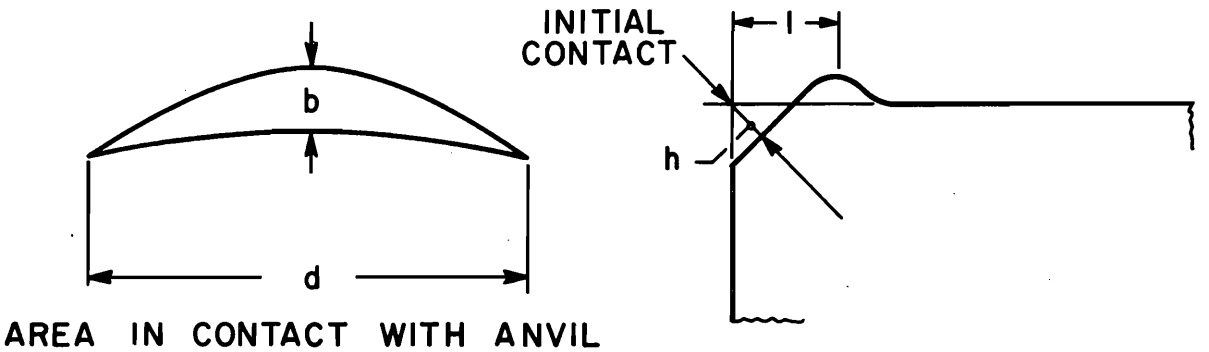

Dimension	Model Test Results	Full-Size Cask Results	
		Predicted	Actual
d	2.44 in.	8.9 in.	9.5
l	0.69 in.	2.5 in.	2.5
b	0.44 in.	1.6 in.	
h	0.295 in.	1.1 in.	~1.2
area	0.68 in.^{2}	9 in.^{2}	

Table I-3. RESULTS OF CASK DROP ON 6-in.-diam PISTON

Drop Height (ft)	Penetration (in.)		
	Model Cask	Full-Size Cask	
		Predicted	Actual
2	0.013	0.047	0.1875
3 1/2	0.151	0.551	0.875
5	0.268	0.978	1.50
6 1/2	0.534	1.95	2.25

puncture by a 6-in.-diam piston, (3) investigating tie-down requirements, and (4) evaluating test results so that they can be applied to design calculations and therefore eliminate the necessity of extensive model and prototype testing to ensure that new casks meet requirements.

SAFETY IN GAS-COOLED POWER REACTORS

(Held over from Vol. 4, No. 3)

REFERENCES

Site Criteria for Reactors with Multiple Containment

1. Code of Federal Regulations, Title 10, Part 100, Reactor Site Criteria; see Federal Register, 26(28): 1224 (Feb. 11, 1961).
2. J. J. DiNunno, F. D. Anderson, R. E. Baker, and R. L. Waterfield, Calculation of Distance Factors for Power and Test Reactor Sites, USAEC Report TID-14844, March 23, 1962.
3. T. J. Burnett, Reactors, Hazards vs Power Level, Nuclear Sci. and Eng., 2: 382 (1957); in particular Eq. 1, p. 383.
4. Meteorology and Atomic Energy, prepared by the U.S. Department of Commerce Weather Bureau for the United States Atomic Energy Commission, AECU-3066, July 1955.
5. J. O. Blomeke and M. F. Todd, Uranium-235 Fission Product Production as a Function of Thermal Neutron Flux, Irradiation Time, and Decay Time, USAEC Report ORNL-2127, Part 1, Volumes 1 and 2, Oak Ridge National Laboratory, November 1958.
6. T. D. Anderson, Time-Dependent Release of Gaseous Material from a Three-Barrier Reactor Containment System, USAEC Report ORNL-TM-397, Oak Ridge National Laboratory, Nov. 16, 1962.
7. F. T. Binford, Oak Ridge National Laboratory (unpublished).
8. T. D. Anderson, W. B. Cottrell, M. H. Fontana, O. H. Klepper, and H. C. McCurdy, Activity Release from the N.S. SAVANNAH in the Maximum Credible Accident, Appendix F, USAEC Report ORNL-3361, Oak Ridge National Laboratory (to be issued).
9. U.S. Atomic Energy Commission, Docket 50-3, Exhibit K-4 and revisions.

10. Wm. B. Cottrell, L. A. Mann, F. L. Parker, and G. D. Schmidt, Environmental Analysis of N.S. Savannah Operations at Camden, USAEC Report ORNL-2867 (Rev.), Oak Ridge National Laboratory, Jan. 24, 1961.

11. Babcock & Wilcox Co., Nuclear Merchant Ship Reactor Final Safeguards Report, USAEC Report BAW-1164, 1961.

12. Advisory Committee on Reactor Safeguards, Report on City of Los Angeles Water and Power Department Boiling Water and Pressurized Water Reactor Proposals, Oct. 12, 1962, and Report on City of Los Angeles Department of Water and Power Boiling Water Reactor Proposal, Nov. 14, 1962. These reports contain further references regarding the proposal.

13. Pacific Gas & Electric Company, Final Hazards Summary Report, Humboldt Bay Power Plant, September 1, 1961, Docket 50-133.

14. Consolidated Edison Company of New York, Inc., Ravenswood Nuclear Generating Unit A. Preliminary Hazards Summary Report and Site Data, prepared in cooperation with Westinghouse Electric Corporation and Stone & Webster Engineering Corporation (no date given), Docket 50-204.

15. R. P. Hammond, Large Reactors May Distill Sea Water Economically, Nucleonics, 20: 45 (1962).

Third Report of the Federal Radiation Council

No references.

Radioisotope Source Testing and Handling

16. F. N. Case, Isotope Sales Department, Oak Ridge National Laboratory, private communication, February 4, 1963.

17. E. Lamb, Safety Radioisotope Source Fabrication, Nucl. Safety, 2(3): 38–40 (March 1961).

18. H. F. McDuffie, Safety in Source Handling, Nucl. Safety, 3(2): 8–13 (December 1961).

19. NCRP Rep. 24, Protection Against Radiations from Sealed Gamma Sources, National Bureau of Standards Handbook 73, July 1960.

20. Protection Against Radiations from Radium, Cobalt-60, and Cesium-137, National Bureau of Standards Handbook 54, Sept. 1, 1954.

21. J. Simerda and J. Hekrdle, Rapid and Accurate Assessment of Safe Conditions for Handling Radioactive Sources, Jaderna energie, 7: 43–47 (1961).

22. R. E. Newell, Radiation Hazard in Industry, J. Am. Med. Assoc., 175: 227–229 (1961).

23. J. R. Buchanan, Accidents in Nuclear Energy Operations, Nucl. Safety, 3(4): 90–96 (June 1962).

24. W. B. Cottrell, Accidents in Nuclear Energy Operations, Nucl. Safety, 2(4): 55–63 (June 1961).

25. R. H. Dilworth and C. J. Borkowski, Personal Radiation Monitor, USAEC Report ORNL-3058, Oak Ridge National Laboratory, August 1961.

26. C. J. Borkowski and R. H. Dilworth, Personal Radiation Monitor, Proceedings of the International Atomic Energy Agency Conference on Nuclear Electronics, Vol. III, pp. 429–440, Belgrade, 1962.

Packaging and Regulation Standards for Shipping Radioactive Materials

27. D. E. Patterson and V. P. DeFatta, Summary of Incidents Involving USAEC Shipments of Radioactive Material, 1957–1961, USAEC Report TID-16764, 1962.

28. F. F. Leimkukler, Safety Considerations in the Transportation of Highly Radioactive Materials — An Operations Research Approach, paper presented at the Symposium on Packaging and Regulatory Standards for Shipping Radioactive Materials, Germantown, Md., Dec. 3–5, 1962 (proceedings to be published as USAEC Report TID-7651).

29. J. M. Morgan, Jr., et al., A Study of the Possible Consequences and Costs of Accidents in the Transportation of High Level Radioactive Materials, USAEC Report NYO-9772, August 1961.

30. Agent T. C. George's Tariff No. 13, Interstate Commerce Commission Regulation No. 4, Transportation of Explosives and Other Dangerous Articles by Land and Water and Rail Freight and by Motor Vehicle (Highway) and Water Including Specifications for Shipping Containers, Issued Sept. 15, 1960, Became Effective Sept. 25, 1960, T. C. George Agent, New York, N.Y.

31. Code of Federal Regulations, Title 10, Part 72, Regulation to Protect Against Accidental Criticality and Radiation Exposure in the Shipment of Irradiated Fuel Elements; see also Federal Register, Vol. 26, p. 8982, Sept. 23, 1961.

32. Regulation for the Safe Transport of Radioactive Materials, Safety Series No. 6, IAEA, Vienna, 1961.

33. A. Aikens, Methods and Problems in Evaluating and Approving Casks Using Safety Standards, paper presented at the Symposium on Packaging and Regulatory Standards for Shipping Radioactive Materials, Germantown, Md., Dec. 3–5, 1962 (proceedings to be published as USAEC Report TID-7651).

34. W. I. Thisell, Static and Impact Tests on a Full-Scale, Irradiated Fuel Shipping Cask, paper presented at the Symposium on Packaging and Regulatory Standards for Shipping Radioactive Materials, Germantown, Md., Dec. 3–5, 1962 (proceedings to be published as USAEC Report TID-7651).

35. L. B. Shappert, The Cask Testing Program at the Oak Ridge National Laboratory, paper presented at the Symposium on Packaging and Regulatory Standards for Shipping Radioactive Materials, Germantown, Md., Dec 3–5, 1962 (proceedings to be published as USAEC Report TID-7651).

36. H. G. Clarke, Jr., and W. E. Onderko, Model Impact Tests Pertaining to Shipping Containers for Radioactive Materials, paper presented at the Symposium on Packaging and Regulatory Standards for Shipping Radioactive Materials, Germantown, Md., Dec. 3–5, 1962 (proceedings to be published as USAEC Report TID-7651).

37. L. Horn, Fire Testing of Radioisotope Shipping Containers and Cobalt-60 Teletherapy Head, paper presented at the Symposium on Packaging and Regulatory Standards for Shipping Radioactive Materials, Germantown, Md., Dec. 3–5, 1962 (proceedings to be published as TID-7651).

38. F. E. Dixon, The Design of Shielded Containers to I.A.E.A. Standards, Ref. T.C.A.P./p. 64, paper presented at the Symposium on Packaging and Regulatory Standards for Shipping Radioactive Materials, Germantown, Md., Dec. 3–5, 1962 (proceedings to be published as USAEC Report TID-7651).

39. F. E. Dixon, Free Fall and Fire Test on a Type 28 Container in a Western Red Cedar Packing Case, Ref. T.C.A.P./p. 65, paper presented at the Symposium on Packaging and Regulatory Standards for Shipping Radioactive Materials, Germantown, Md., Dec. 3–5, 1962 (proceedings to be published as USAEC Report TID-7651).

40. C. W. Smith et al., Application of External Energy Absorbers to Large Fission Product Shipping Casks, paper presented at the Symposium on Packaging and Regulatory Standards for Shipping Radioactive Materials, Germantown, Md., Dec. 3–5, 1962 (proceedings to be published as USAEC Report TID-7651).

41. R. A. Meldrum, A Proposed Study of Rail and Highway Transport Systems During a Credible Accident, paper presented at the Symposium on Packaging and Regulatory Standards for Shipping Radioactive Materials, Germantown, Md., Dec. 3–5, 1962 (proceedings to be published as USAEC Report TID-7651).

II. ACCIDENT ANALYSIS

CENTRAL MELTING IN UO_2 FUEL ELEMENTS

T. D. Anderson

The conduction heat transfer limitation usually imposed on bulk UO_2 fuel elements for power reactors is that there be no melting of the fuel under the most adverse operating conditions. The justification for this criterion has been questioned occasionally, but it is intuitively reasonable and there have been failures of test elements that were directly attributable to fuel melting. This latter point was discussed in a previous article in Nuclear Safety.[1]

Proof that the no-fuel-melting thermal design criterion is met in a given reactor has been somewhat difficult to obtain because of uncertainties concerning the thermal conductivity of UO_2 and the thermal conductance of the fuel-to-cladding interface. As a result, designers have usually taken the approach of calculating the central temperature using "conservative" values for the conductivity and interface conductance. This practice is not completely satisfactory, since each designer has his own idea of what is conservative. For example, if it is desired to make a thermal comparison of two reactors, it is not unusual to find that the one with the obviously lower heat rating has the higher reported central fuel temperature. As a result, considerable confusion has arisen as to the thermal capability of UO_2 fuel elements.

Calculation of Central UO_2 Temperatures

The difficulties described above have been due in the past to the lack of data, and, even now, the available fundamental heat transfer data are inadequate to allow accurate predictions of temperatures and temperature

profiles in UO_2 fuel elements. It is possible, however, to make realistic predictions of the heat ratings at which fuel melting will occur. The procedure involves the use of information from fuel irradiation experiments in which melting is observed to determine the value of the conductivity integrated over a certain temperature range. The conductivity integral method, first described by Robertson,[2] has been used quite successfully in Canadian UO_2 irradiation studies, but, unfortunately, it has been used to a lesser extent in U.S. investigations. The method is based on the fact that in a fuel irradiation experiment in which the extent of some temperature-associated change in the fuel, for example, fuel melting, can be measured, it is possible to calculate

$$\int_{T_s}^{T_x} k(T)\, dT$$

by knowing only the heat generation rate and its distribution in the fuel. The quantities in the integral are T_x, the temperature at which the temperature-associated effect occurs, T_s, the temperature of the fuel surface, and $k(T)$, the thermal conductivity of the fuel, which is a function of temperature.

It should be emphasized that, although the integral of the conductivity over the temperature range T_s to T_x can be obtained, no information on the actual value of the integrand (conductivity) or temperature limits is obtainable directly from the fuel irradiation experiment. Nevertheless, it is possible to extrapolate the results of the experiment to other irradiation conditions and, hence, predict the performance of other fuel elements. The procedure is outlined in somewhat more detail in ref. 3, in which the

results of a number of short-term fuel irradiation experiments at Chalk River[4] are reviewed and put in a form suitable for fuel-melting calculations.

Comparison of Calculated Central Temperatures in Several Fuel Elements

The information in ref. 3 was used to determine the heat ratings at which fuel melting would occur in six water-cooled power reactors. The results are presented in Table II-1. All the reactors considered have either been built or are under construction and were selected to give a representative cross section of current reactors of the water-cooled bulk-UO_2-fueled low-enrichment type. The reactor characteristics used in the analysis were obtained from hazards summary reports[5-9] and are listed in Table II-2. No attempt was made in the analyses to obtain conservative results; rather, the objective was to obtain realistic results for all systems on a consistent basis. As may be seen from Table II-1, the estimated fuel-rod linear heat outputs required for fuel melting do not vary much from reactor to reactor and, in general, range from 24 to 28 kw/ft. It is probable that this range of heat ratings for fuel melting is typical of the general class of reactors characterized by the six that are reviewed.

Also shown in Table II-1 are the reactor power levels (expressed as percentage of normal power) that would be required to cause fuel melting. Each of the reactor powers necessary for melting was obtained by dividing the linear heat output for fuel melting by the peak linear heat output at the normal reactor power. Where available, the designers' estimates of reactor powers required for fuel melting are shown for comparison with

Table II-1. HEAT RATINGS NECESSARY FOR FUEL MELTING

Reactor with Initial Core	Estimated Fuel-Rod Linear Heat Output for Fuel Melting (kw/ft)	Reactor Power for Fuel Melting (% of normal power)	
		Present Estimate[a]	Designers' Estimate
Big Rock Point	25.6	244	(b)
CVTR	23.7	169	(b)
Humboldt Bay	27.1	262	150
MH-1A	28.2	178	142
N.S. SAVANNAH	26.6	256	160
Yankee	24.0	206	(b)

[a]Based on assumption that core power distribution does not change with power level.

[b]Not available from hazards summary report.

the present estimates. It is interesting to note that based on only the designers' estimates of fuel melting, it could be concluded that the Humboldt Bay and MH-1A reactors have about the same factor of safety relative to fuel melting. The present analysis, however, shows a considerable difference in the degree of conservatism, although both reactors seem to be adequately conservative. As can be seen, there is little difference in the actual thermal capability of MH-1A and Humboldt Bay fuel elements, and therefore the difference between the factors of safety relative to melting is almost entirely the result of different normal heat outputs.

Conclusions

Some reactor problems require a knowledge of fuel temperatures and temperature distributions at a variety of power levels and to solve such problems conventional heat transfer techniques must be employed. In contrast, if fuel melting is to be considered, only a single temperature or,

Table II-2. CORE DATA USED IN FUEL-MELTING ANALYSES[a]

Reactor with Initial Core	Cladding				Fuel		Fuel-to-Cladding Initial Cold Diametral Gap (in.)	Fuel-Rod Peak Linear Heat Output at Normal Reactor Power (kw/ft)
	Material	Outside Diameter (in.)	Wall Thickness (in.)	Outer Surface Temperature[b] (°F)	Density (% of theoretical)	Enrichment[c] (% U^{235})		
Big Rock Point	Type 304 stainless steel	0.388	0.019	551	94[d]	3.2	0.005	10.5
CVTR	Zircaloy-4	0.4875	0.023	596	93	1.5	0.0115	14.0
Humboldt Bay	Type 304 stainless steel	0.463	0.019	547	95	2.6	0.005	10.4
MH-1A	Type 304 stainless steel	0.507	0.023	605	94	4.9	0.0045	15.8
N.S. SAVANNAH	Type 304 stainless steel	0.500	0.035	617	93	4.2	0.0045	10.4
Yankee	Type 348 stainless steel	0.340	0.021	636	92	3.4	0.004	11.6

[a]All dimensions are nominal values.

[b]Outer wall temperature assumed to be the saturation temperature at design pressure.

[c]Where there was more than one enrichment zone, the value for the innermost zone was used in the analysis.

[d]Assumed.

more precisely, a single temperature effect is of interest. Since this temperature effect is observable, it is possible to obtain information from fuel irradiation experiments that can be used to estimate the extent of melting to be expected under different irradiation conditions. In particular, the irradiation data can be used to predict the heat ratings at which central fuel melting will occur in reactor fuel rods. There are, of course, uncertainties in such estimates, but it is the reviewer's belief that these uncertainties are not as large as those resulting from more conventional heat transfer analyses of fuel melting conditions.

STORED ENERGY IN REACTOR MATERIALS

M. C. Wittels

The production of atomic displacements in graphite as a result of fast-neutron collisions continues to be of importance at high doses and relatively low temperatures when significant amounts of energy are stored. Some of the studies of this phenomenon were reviewed in previous issues of this journal.[10,11] More recently, extensive analyses of Wigner energy and the potential hazards associated with it have been published, mainly by British and Soviet scientists.[12-15] Stored energy has also been found in some uranium oxides[16] after irradiation, but the amounts involved do not present a hazard.

Any discussion of stored energy release from graphite in any reactor operation must be based on the fact that a hazard exists only when such a possible release can raise the temperature of the reactor components to dangerous levels in an uncontrolled manner. Therefore, if either the probability of release is eliminated (or greatly reduced) or the release can be readily controlled, adequate safeguards may be available. The energy release rate at a given temperature is not by itself the only important factor to consider. The actual physical and operating characteristics of the reactor must be carefully noted, and the variation in specific heat of normal graphite with increasing temperature is an equally important factor.

Soviet Studies on Graphite-Stored Energy

A recent Soviet article[12] on this subject is largely a review of previously reported stored-energy analyses at Windscale, BEPO, and BNL,

with brief analyses of the Russian IR reactor and the first Russian atomic power station. The brief notes concerning the Russian reactors are therefore of greatest interest. The IR reactor was dismantled after operating four years at an average power output of 50 Mw with an integrated thermal-neutron flux at the center of the reactor of 4.5×10^{21} neutrons/cm^2. The peak temperatures of the graphite moderator of the IR ranged between 400 and 500°C and no Wigner-energy problems were mentioned by the author, presumably because of the low-energy storage rate at the high operating temperatures. Similarly, no Wigner-energy problems have been encountered at the first atomic power station in the USSR, where the graphite is at temperatures as high as 700 to 800°C.

In another recent Soviet article,[13] a short theoretical treatment of radiation effects in graphite is given that deals with a damage model based on a graphite single crystal. In this model it is supposed that Frenkel defects are produced, with interstitial atoms trapped in very specific positions between the hexagonal graphite layers. This in turn gives rise to a distortion of the planes, and by calculating the short range forces caused by these deformations, a binding energy for a pair of deformed planes is obtained. By assuming given numbers of Frenkel defects, the equilibrium interplanar spacing between a pair of deformed planes is calculated, as well as a condition of minimum potential energy. The authors then correlate the change in lattice constant of a crystal of graphite with these disordering effects and with experimental values of stored energy.

The results show that at high irradiation doses, the theory gives lattice parameters much higher than those derived experimentally, but it

is recognized that the model is much too simple, since it (1) recognizes only simple Frenkel defects, (2) presumes no overlapping of defects, (3) assumes no lateral deformation in the graphite layers, (4) and necessarily ignores the imperfections that exist in reactor-grade graphite.

British Studies on Graphite-Stored Energy

Comprehensive and timely studies of stored energy problems are presented in two British papers.[14,15] Information vital to the problem is given in that the studies were mainly concerned with graphite-stored energy in reactors operating between 30 and 350°C, a range in which the stored-energy problems could possibly be serious at very high irradiation dosages. It is clear that at the time of writing, the investigators were primarily concerned with the energy release rate $(dE/dT)_{400°C}$ of graphite and whether this rate could be kept below 0.3 cal/g·°C for the British power-producing reactors considered. This rate was selected as a norm for safe operating conditions, since it was reasonably below the normal specific heat value of graphite at 400°C and therefore spontaneous release of energy could not be propagated at temperatures where the fuel elements might be damaged.

The studies by Bell and his co-workers[14] represent a very careful attempt to correlate the changes produced in graphite in several different reactors, under different neutron spectra, temperatures, and dosages, with the objective of obtaining information with which to predict stored-energy release rates in moderator graphite exposed up to 20 to 30 years in power reactors. In order to accomplish this correlation, theoretical values of equivalent damage flux and equivalent temperatures had to be established in order to derive the $(dE/dT)_{400°C}$ vs effective dose curves. For comparison

of equivalent damage fluxes (ϕ_d) in reactor-irradiated graphite, an empirical method was developed. A function $(1/r)\ \phi\ (r)$ was used in the calculation that was proportional to the damage rate in an infinite graphite mass at a distance r from an infinite line source of fission neutrons. Ignoring the voids in the graphite structure, the damage flux at a point 0 was calculated by summing the damage fluxes produced at point 0 by the fuel in each channel:

$$\phi_d(0) = cW \sum_i \frac{1}{r_i}\ \phi(r_i)\ ,$$

where c is a constant, r_i is the distance from i^{th} fuel channel to point 0, W is the power rating per unit length of fuel, and W varies as the product AP, with A being the cross-sectional area of the fuel and P the power rating in megawatts per adjacent ton. The ratio of the damage rate in reactor 1 and to the damage rate in reactor 2 at the same power rating is therefore

$$y = \left(\frac{\phi_d}{P}\right)_1$$

$$\left(\frac{\phi_d}{P}\right)_2 = \frac{\left[A \sum_i \frac{1}{r_i}\ \phi(r_i)\right]_1}{\left[A \sum_i \frac{1}{r_i}\ \phi(r_i)\right]_2}\ .$$

Based on this type of analysis, a comparison of the damage fluxes of BEPO and Calder Hall was obtained (Table II-3). Equivalent temperatures, θ, were calculated for Calder Hall by dividing a function $R(\theta)$ into the flux expressed in megawatt days per adjacent ton. The function $R(\theta)$ is a

Table II-3. COMPARISON OF GRAPHITE DAMAGE RATES IN BEPO AND CALDER HALL

	A (cm^2)	$\sum \frac{1}{r} \phi(r)$	y
BEPO	4.1	1.13	1
Calder Hall			
Center of lattice	6.66	0.94	1.37
X-hole specimen carrier	6.66	1.02	1.48
Fuel channel wall	6.66	1.32	1.91

correlating dose factor used to make the experimental points fit a standard curve. The following data were obtained:

$R(\theta)$	Equivalent Temperature (°C)
1	135
0.370	180
0.100	223
0.048	269
0.025	315

A reasonably good fit was obtained with experimental values, but the extrapolated values at higher doses and temperatures showed a tendency for $(dE/dT)_{400°C}$ to saturate considerably below 0.3 cal/g·°C. Although this is not unreasonable, it was not demonstrated experimentally. In any event, the results indicate that reasonably good predictions of $(dE/dT)_{400°C}$ can be obtained up to 0.3 cal/g·°C if the equivalent temperature is between 135 and 314°C. Utilizing (1) the effective dose and (2) the function $R(\theta)$, the energy release rate $(dE/dT)_{400°C}$ was found to vary experimentally for irradiations between 135 and 314°C as follows:

$(dE/dT)_{400°C}$ (cal/g·°C)	Effective Dose (Mwd/at.)
0.11	1000
0.18	2000
0.22	3000
0.25	4000
0.27	5000
0.28	6000

Significantly, this temperature range is important in present-day British power reactors.

The second British report[15] covers nearly the same temperature span as the first,[14] and also gives some interesting results concerning radiation annealing and stored-energy growth in previously annealed graphite. Much of the information in this report confirms previous results from Hanford[17] and Russian[18] experiments, particularly with regard to the strong temperature dependence of stored-energy buildup. In this report,[15] as in the previous report,[14] the rate of energy release at 400°C, $(dE/dT)_{400°C}$, is employed as a guideline, and it is noted that this rate still increases at doses as high as 2×10^{21} neutrons/cm^2 despite the fact that $(dE/dT)_{170°C}$ undergoes a dramatic decrease at high doses. For graphite samples irradiated at temperatures between 20 and 40°C, the energy release rate $(dE/dT)_{400°C}$ as a function of dose is given in the data presented below:

Irradiation Dose (Mwd/at.)	Rate of Release of Energy (cal/g·°C)
100	0.04
400	0.13
750	0.18
1000	0.21
1300	0.23
1600	0.26
3000	0.33
3200	0.34
3600	0.36

For graphite samples irradiated between 20 and 40°C the following data were obtained for an energy release rate $(dE/dT)_{170°C}$ as a function of dose:

Irradiation Dose (Mwd/at.)	Rate of Release of Energy (cal/g·°C)
100	0.42
400	0.69
750	0.58
1000	0.53
1300	0.46
1600	0.42
3000	0.41
4000	0.41
5000	0.41

Similarly it is noted that a comparison of the energy release rate (dE/dT) for virgin graphite and for irradiated and annealed graphite following a subsequent irradiation shows a smaller value for the latter at 170°C. At 400°C the rate of energy release is independent of the dose. This is indicated in Table II-4 for graphite irradiated at 25°C.

Table II-4. RATE OF STORED-ENERGY RELEASE FROM GRAPHITE IRRADIATED AT 25°C

Equivalent Irradiation Dose (neutrons/cm^2)	Rate of Release of Energy (cal/g·°C)			
	$(dE/dT)_{170°C}$		$(dE/dT)_{400°C}$	
	Virgin	Irradiated and Annealed	Virgin	Irradiated and Annealed
$\times 10^{19}$				
1	0.20	0.14	0.05	0.16
2	0.31	0.25	0.05	0.16
3	0.39	0.31	0.06	0.17
4	0.45	0.37	0.06	0.18
5	0.50	0.40	0.07	0.18
6	0.54	0.42	0.08	0.19
7	0.58	0.44	0.08	0.20

Stored Energy in Uranium Oxide

Stored energy has also been found in irradiated uranium oxide,[16] but it presents no hazard for usual reactor operations for several reasons. First, no stored energy release from UO_2 and UO specimens has been detected, and only a very small release at 340°C was found from $UO_{2.08}$. Although a larger stored energy release is found from U_3O_8, the stored-energy saturation value is only 25.5 cal/g at an exposure of 1.4×10^{17} neutrons/cm^2. The saturation effect is presumed to occur as a result of overlapping of fission tracks so that the stored energy is proportional to the total volume of material enclosed by fission-track events. It was suggested that the low-temperature annealing (150°C) in U_3O_8 was probably due to oxygen diffusion, whereas high-temperature annealing (~340°C) probably depends on nucleation of U_3O_8 for the onset of recrystallization.

IN-PILE LOOP HAZARDS

(Held over from Vol. 4, No. 3)

FISSION-PRODUCT RELEASE FROM UC FUELS

(Held over from Vol. 4, No. 3)

LOSS-OF-COOLANT ACCIDENTS IN GAS-COOLED REACTORS

(Held over from Vol. 4, No. 3)

INTEGRITY OF REACTOR FUELS

(Held over from Vol. 4, No. 3)

REFERENCES

Central Melting in UO_2 Fuel Elements

1. T. D. Anderson, Integrity of UO_2 Fuel Elements, Nucl. Safety, 3(1): 18-23 (September 1961).
2. J. A. L. Robertson, $\int k d\theta$ in Fuel Irradiations, Canadian Report CRFD-835, April 1959.
3. T. D. Anderson, Calculating Fuel Melting in Bulk UO_2 Fuel Elements, USAEC Report ORNL-TM-484, Oak Ridge National Laboratory, to be published.
4. A. S. Baine et al., UO_2 Irradiations of Short Duration — Part II, Canadian Report CRDF-955, February 1961.
5. Carolinas Virginia Nuclear Power Associates, Inc., Final Hazards Summary Report, Part B, Vol. II, Report CVNA-90, Office of Technical Services, Department of Commerce, 1962.
6. Initial Hazards Summary Report for the MH-1A Floating Nuclear Power Plant, Vol. I, Engineering and Construction, The Martin-Marietta Corp., May 1962.
7. Pacific Gas and Electric Company Technical Specifications, Humboldt Bay Power Plant Unit Number 3, AEC Docket No. 50-133, Amendment No. 12, Oct. 16, 1961.
8. Yankee Nuclear Power Station Technical Information and Final Hazards Report, Vol. I, Part B, License Application, AEC Docket No. 50-29, Sept. 15, 1959.
9. Final Hazards Summary Report for Big Rock Point Plant, Vol. I, Plant Technical Description and Safeguard Evaluation, AEC Docket No. 50-155, Nov. 14, 1961.

Stored Energy in Reactor Materials

10. M. C. Wittels, Release of Wigner Energy from Graphite, Nucl. Safety, 1(2): 20–24 (December 1959).

11. M. C. Wittels, Stored Energy in Graphite, Nucl. Safety, 2(3): 13–15 (March 1961).

12. V. I. Klimenkov, Behavior of Graphite in Nuclear Reactor Stacks, At. Energi. (USSR), 10(5): 447–460 (May 1961).

13. V. M. Agranovich and L. P. Semenov, Contribution to the Theory of Radiation Effects on Some Properties of Graphite, At. Energi. (USSR), 10(6): 572–576 (June 1961).

14. J. C. Bell, H. Bridge, A. H. Cottrell, G. B. Greenough, W. N. Reynolds, and J. H. W. Simmons, Stored Energy in the Graphite of Power-Producing Reactors, Phil. Trans. Roy. Soc. London, Ser. A, 254(243): 361–395 (February 1962).

15. H. Bridge, B. J. Kelley, and B. S. Gray, Stored Energy and Dimensional Changes in Reactor Graphite, TRG Report 119C, Oct. 4, 1961.

16. B. G. Childs, The Release of Stored Energy from Neutron-Irradiated Uranium Oxides, J. Nucl. Mater., 5(1): 128–139 (January 1962).

17. W. K. Woods, L. P. Bupp, and J. F. Fletcher, Irradiation Damage to Artificial Graphite, Proceedings of the International Conference on the Peaceful Uses of Atomic Energy, Geneva, 1955, Vol. 1, p. 455, United Nations, New York, 1956.

18. V. I. Klimenkov, and Yu N. Aleksenko, Change in the Properties of Graphite When Irradiated by Neutrons, pp. 227–237 in Conference of the Academy of Science of the USSR on the Peaceful Uses of Atomic Energy, Moscow, July 1–5, 1955, Vol. 3.

III. CONTROL AND INSTRUMENTATION

RELIABILITY OF REACTOR SYSTEMS

Reactor reliability depends on instruments and control systems to a degree that is largely determined by the skill of the reactor designer in meeting the sometimes conflicting objectives of high performance and safety of the plant. The aim of this review is to discuss the degree of reliability attainable in instrument systems and the degree of reliability needed in various reactor applications.

Means of Attaining Reliability

Siddall defines reliability as the sum of safety and serviceability (see Feature Article, pp. , this Review), and defines "The propensities to be free from unsafe failures and safe failures...respectively... as 'safety' and 'serviceability'... ." For the purposes of this article, reactor control systems are considered to be those systems having serviceability as the main objective and safety (or protective) systems as those having safety as the principal objective. Limited attempts are sometimes made to improve the serviceability of safety systems, but excessive efforts in this direction degrade reliability.

Early reactor safety systems depended heavily on the fail-safe principle to assure safety. It is now generally agreed, however, that this approach is inadequate. Binns[1] states that "In connection with a given component, the amount of effort that it is worthwhile to expend to make it fail safe will depend on the probability of its failing. This effort will also be limited by the law of diminishing returns, the designer bearing in mind that complete failure-to-safety is, for practical purposes, unattainable." Siddall states that "The 'fail-safe' principle...is an

attempt to improve safety by arranging for all the more common types of failure to cause the output of the system to revert to a known safe state, which, in the case of a reactor, usually consists of a shutdown. This measure increases safety at the expense of serviceability, with little or no effect on reliability."

Jacobs[2] defines "Fail Safe Safety Channel — a safety channel that scrams if it develops a fault that would keep it from tripping on excessive flux. Note that the term 'fail safe' is an objective of good design and can never be completely achieved in reality... .. Operational fault — a fault which prevents a safety channel from scramming on excessive flux but which is not revealed until the controller (channel) is tested (note that this is the fault which prevents fail safe from being a reality)."

Jacobs has shown that through the use of redundant channels subjected to tests at frequent intervals, great improvements in safety can be obtained in comparison with the safety that is characteristic of a single channel which is given the level of preventive maintenance usually applied to conventional control equipment. If it is assumed that operational or unsafe failures occur twice per year per channel and that there is a complete channel check once per shift, the figure of merit calculated for two independent safety channels is equivalent to leaving the plant unprotected for 1 hr in 100 years — an entirely satisfactory state of affairs.

In the interest of improving serviceability, which is impaired by the high probability of false trips in a one-out-of-two system, coincidence is introduced. This results in a reduction in safety, and three

channels are required in two-out-of-three coincidence to produce a system that will leave the plant unprotected 1 hr in 30 years — still a very satisfactory situation.

It is self-evident that the employment of redundancy and testing will produce phenomenal improvements in safety if the tests are complete and the individual channels are completely independent in all important respects. This has been discussed by Ditto,[3] who concludes that the entire system must be examined in detail in order for the improvement in safety to be assessed.

Coincidence is usually employed to improve serviceability of redundant systems, with a consequent but unimportant reduction in safety; however, experience at the Oak Ridge National Laboratory indicates less need for coincidence for this purpose than is generally believed to be the case. For example, the Oak Ridge Research Reactor (ORR) utilizes a one-out-of-three system with a 10-msec response time. This system, which employs vacuum tubes and includes a period trip, has initiated only one scram in two years. Several other reactors that use similar safety systems, notably the Materials Testing Reactor (MTR), the Engineering Test Reactor (ETR), and the Low-Intensity Test Reactor (LITR), also have satisfactory serviceability records. A program is under way, however, to develop a safety system employing coincidence that will improve safety rather than serviceability through the improved testing made possible by coincidence.

The importance of testing cannot be overemphasized. Binns[1] states that "A completely thorough test of a safety channel would begin with an actual and deliberate rise of the reactor process variable to the trip

point and would end with actual safety action, such as a scram." In contrast, most safety system test regimes now in use employ pulses of short duration or more deliberate tests performed over a smaller fraction of the system. A much more comprehensive test system has been developed by Siddall[4] in which the process variable is locally perturbed to initiate a trip of a single channel. By an ingenious modification of the coincidence matrix, the perturbation is observable in the output, which is insufficient to scram the reactor.

The practical limitations in achieving complete testing and complete independece of redundant channels have been discussed by Walker,[5] who pointed out some pitfalls related to sensor locations. This has become a matter of real concern at the Oak Ridge National Laboratory. For example, in the ORR, intolerable changes in flux at the ionization chambers could be caused by accidental or intentional flooding of the experiment beam holes. The resulting attenuation of the flux reaching the chambers would cause the automatic control system to increase the reactor power while the safety system, whose signals would be similarly attenuated, would stand approvingly by.[6] This situation is being corrected in the ORR by utilizing, for safety, chambers that are sensitive only to prompt fission gammas[7] and thus less sensitive to changes in shielding caused by flooding. A somewhat similar situation in the LITR was remedied through installation of temperature-sensitive safety channels.

It remains an open question whether increased vigilance or the employment of a diversity of parameters or both are required to achieve safety for such unforeseen combinations of circumstances. The answer may well be different for different reactor types. On the other hand,

it is quite evident that the combination of incomplete testing and incomplete independence can cause a system intended to be highly reliable to be reduced to a system of ordinary reliability.[8] The coupling together of safety and control can change reliability into danger.[9]

It should be observed that failures to safety that result in plant shutdown are readily apparent, and sometimes a plant will be in operation for a number of years before such failures are reduced to an acceptable minimum. In contrast, failures to danger are not all apparent to the operating staff and some may be virtually impossible to detect. Moreover, motivation other than continuity of plant operation must be employed in the continuing search for these unsafe failures. The potentially unsafe situations that have been uncovered are convincing evidence that safety will be obtained only through critical surveillance of operating systems.

The hope is often expressed that statistical treatment of component failure experience will result in a quantitative expression for reliability. This seems unlikely because the reliability of a system rather than a component is the real concern, and the reliability of a system depends not only on the detection of faults but also on the detection of design errors. Schultz[10] has pointed out that the Westinghouse Test Reactor (WTR) experienced 5 to 20 false scrams per year, whereas the application of Jacob's formula led to the prediction of 0.001 scram per year. This discrepancy of approximately 10^4 in the predicted figure of merit as applied to false scrams (serviceability) casts doubt on the validity of the figure of merit predicted for unsafe failures (safety). Schultz[10] says "There are several reasons why bare statistical reasoning

based on the safety-circuit logical configuration is far from enough for determining real safety."

In another case,[8] difficulties were reported that were caused by faults that affected all channels to the extent that the fallability of the system was "10^3 larger than the independent-fault coincident rate estimated previously... . Since the probability of a fault common to all channels appears to be so much higher than a fault due to the coincidence of random faults in separate channels we conclude that we did not achieve sufficient channel isolation."

Degrees of Attainable Reliability

It is useful to consider reliability to be of two classes: (1) control system reliability and (2) safety system reliability. In a reliable control system the interlocks, annunciators, relays, controllers, etc., are for the purpose of causing the reactor to operate in the manner intended by the designer and for minimizing operator mistakes. The consequence of failure of these devices is a shutdown of the reactor, either directly because of the failure or indirectly through an increase of reactor power and subsequent action by the safety system. The reliability of the system will therefore be based on economic considerations, with continuous operation of the plant a major objective. Even when adopted for a reactor, the system usually has no more than ordinary control system reliability.

The reliability of the safety system, on the other hand, must be of an order sufficiently high to protect the core from any conceivable gross failure of the controls. Such reliability is obtainable through the use

of redundant independent channels completely tested and monitored. This high degree of reliability is mandatory because the consequence of failure to operate correctly when required would be damage or destruction of the core.

Degree of Reliability Required

The degree of reliability required in various reactor systems is not inherent to the system or component but rather to the function that system or component performs in preventing potentially serious accidents. Both safety system and control system reliability, as defined above, have been applied at the Oak Ridge National Laboratory to reactor design with satisfactory results. In order to increase the serviceability of the automatic control system and other apparatus not a part of the safety system but which, upon failure, would have a high probability of increasing the reactor power level, it has been the practice to employ alarm, setback, or reverse in order to forestall a scram. This is not done with the intent of increasing safety, but rather with the objective of preventing unnecessary shutdowns. The serviceability of these systems has been entirely satisfactory.

Systems for reactor safety, afterheat protection, and cold-slug prevention are commonly employed to protect the reactor core. The consequence of failure of these systems to operate correctly when required is damage or destruction of the core, and therefore systems of high reliability are required. Although reactor safety system reliability has received much attention, the reliability requirements for cold-slug prevention and afterheat protection seem to have been generally neglected.

Hazards analyses quite often state that the cold slug will be prevented by interlocks having ordinary control system reliability, and therefore the reliability is not of a quality consistent with the consequences of failure. It should be noted that large negative temperature coefficients in many cases serve to protect the reactor from reactivity excursions. When the reactor is able to convert step increases of reactivity of several dollars into tolerable temperature rises, as in the case of the N.S. SAVANNAH reactor,[11] the major role of the safety system becomes that of stopping the reactivity addition before it becomes excessive. The ability to insert massive amounts of negative reactivity with minimum delay becomes unimportant.

The existence of a large negative temperature coefficient, while diminishing the role of the safety system, leads to vulnerability to cold-slug damage such as that associated with starting a coolant pump and introducing coolant at low temperature to the core when the core is at a much higher temperature. The resulting reactivity addition is often capable of destroying the core, and the accident has a higher probability of occurring than many other forms of reactivity accidents. In spite of this, it is the usual practice to depend upon interlocks of ordinary control system reliability rather than safety system reliability to prevent cold-slug accidents. In fact, current drafts of reactor safety standards being considered for adoption do not mention reliability requirements.

Afterheat-protection systems are required to have a high degree of serviceability in that correct operation is mandatory after the reactor has been shut down. It is customary to rely on multiple power sources, sometimes with questionable independence, for protection. Vincens[12]

has reviewed a number of reliable power systems that are in use for after-heat protection.

The pressure vessel and related piping constitute the primary containment for many reactors. Because of the structural requirements for pressurized operation, the integrity is considered to be high, and thus this primary containment system constitutes an important barrier to the dispersion of fission products. It is not generally considered that the integrity of the pressure vessel is strongly dependent on the correct operation of instruments; however, the failure of the SPERT III pressure vessel[13] was attributed to the incorrect application and operation of instruments that permitted the water level to fall and thus expose the pressurizer heaters, with consequent overheating of the pressurizer.

The failure of the primary vessel would, in many power reactor plants, result in core meltdown and dispersal of fission products into the secondary containment system. It is suggested therefore that the consequence of failure of the primary containment system instrumentation is potentially greater than that of the failure of the reactor safety system.

The secondary containment vessel is the last barrier between the reactor and the general public, and therefore failure to operate correctly when correct operation is mandatory will have a greater impact on public relations than any other reactor system failure. The necessity in some systems for ventilating the secondary containment vessel imposes a reliability problem in that valves must close the ventilating ducts and reliable closure depends on the correct operation of instruments and control systems. The problem is aggravated by the requirement

that all the valves must be tightly closed to effect containment. This is in contrast to the reactor safety system which is usually required to insert only a fraction of the total number of rods to effect shutdown. Hanauer[14] reviewed the closure systems of eight power reactor containment systems and found the reliability in several cases to be below that of a reactor safety system.

Reliability in Operating vs Shutdown Condition

There is a growing conviction that a reactor is safer in operation than in the shutdown condition. In discussing the NRX and NRU reactors, Breckon and Collins[15] state that "The (NRX) accident pointed out quite clearly that a reactor capable of operation but in a shut down state is potentially more hazardous than when it is operating at full power, a fact which has been borne out by other reactor accidents throughout the world." The Canadian practice is to do as much maintenance testing and fuel handling as possible with the reactor in operation so that the first error will result in a noticeable perturbation and errors will be less likely to accumulate than would be the case if testing and fuel handling were done with the reactor shut down.

Most reactors must be loaded and unloaded by manual manipulation of the fuel. During such fuel-handling operations, the reactor is without the protection of the safety system and the pressure vessel cover is removed. In this condition the power reactor resembles the critical experiments in which a number of prompt critical excursions have resulted from errors in manual manipulation. The hazard is increased by the presence of fission products in spent fuel and by the infrequence of the

operation and consequent unfamiliarity of plant personnel with procedures.

The only protection against the loading accident becomes administrative procedure and an adequate shutdown margin. Bates,[16] in reviewing the shutdown systems for 18 power reactors, states the criteria for shutdown margin as applied to Oak Ridge National Laboratory reactors and concludes that in power reactors the shutdown margin is minimal, in some cases requiring, in addition to rod insertion, the addition of soluble poison, as in the Yankee and Saxton reactors. It is evident that the fuel-loading procedures should contain the provision that the containment system be tightly closed until sufficient fuel has been removed to provide an adequate shutdown margin. Finally, the vulnerability to the loading accident has been forcibly brought into prominence by the SL-1 accident.[17]

Conclusion

The barriers which must be breached to violate the ultimate safety of the reactor plant in the operating and the shutdown conditions are schematically illustrated in Fig. III-1. As is apparent, the reliability of the reactor safety system has been overemphasized in comparison with the attention given to the secondary containment closure, the shutdown margin, and even cold-slug prevention and afterheat protection.

(E. P. Epler)

UNCLASSIFIED
ORNL-LR-DWG 78136

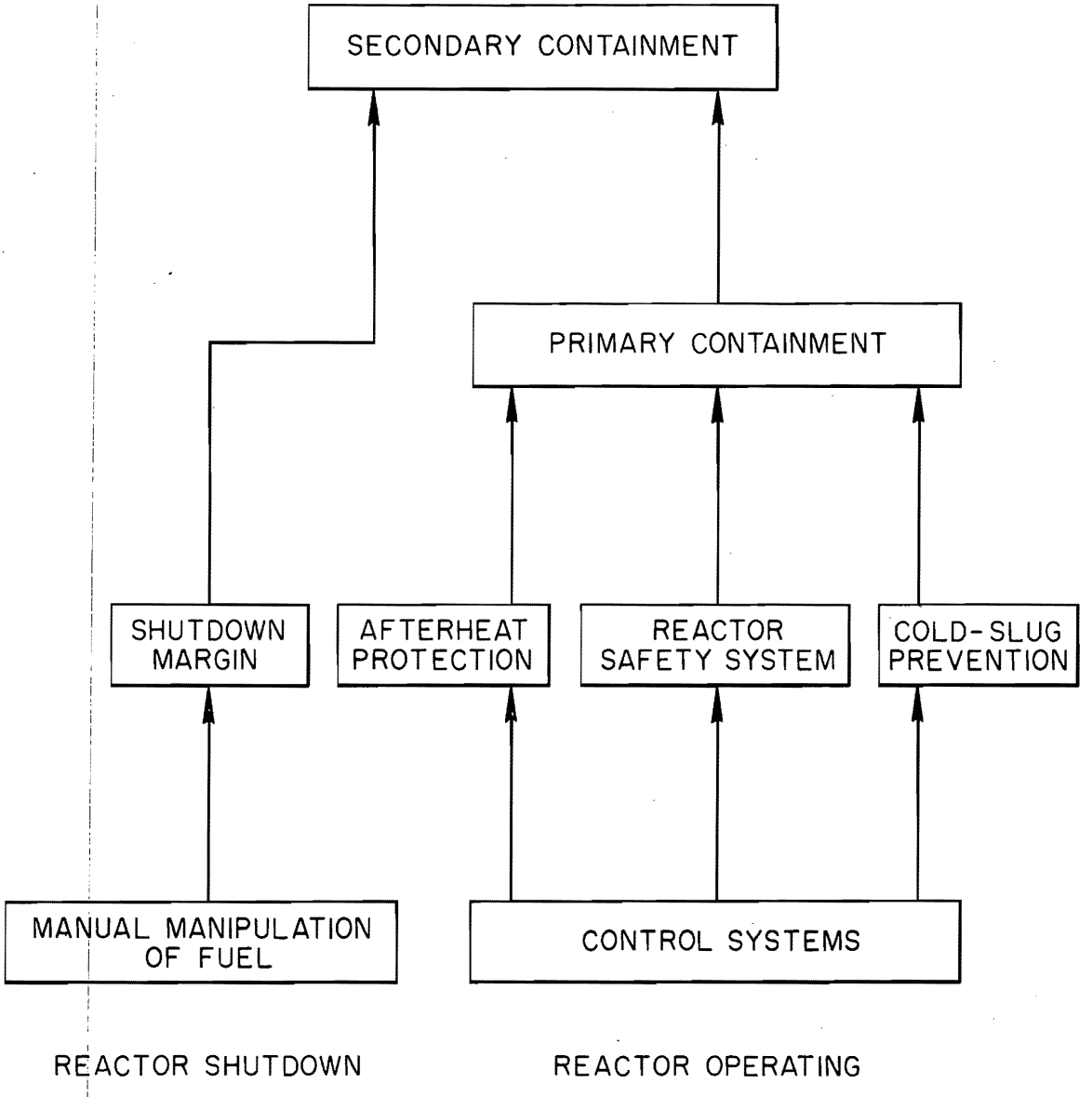

Fig. III-1. Reactor Safety Barriers in the Operating and the Shutdown Conditions.

CONTROL ROD DRIVES

A number of reactor control rod drives were described briefly and certain characteristics of these were considered in an earlier article.[18] Other types exist, as do variations of those already discussed, and the purpose here is to describe three of the latter.

Control Rod Drives for N.S. SAVANNAH Reactor

The N.S. SAVANNAH reactor is to be fitted with a version of the nut and lead-screw drive[19] in place of the present hydraulic cylinder and nut or motor-driven stop arrangement already reviewed.[18] In common with other variations of this replacement drive, no rotating or sliding seals of any type are required for transmitting motion through the reactor pressure vessel wall, since each operating mechanism is completely enclosed in a thimble that is part of the vessel volume. In order to minimize heat losses, the 21 thimbles and rod mechanisms are fitted with heat shields to reduce thermal radiation and long restricted passages to stop convection currents in the water. These provisions permit the nut and lead-screw drive to be designed to operate in a 300°F (maximum) environment of highly demineralized water rather than at some temperature near the reactor outlet temperature of 545°F. The maximum design pressure is 2000 psi, and the normal operating pressure is 1750 psi.

The prime mover selected for this drive is a direct-current-powered stepping motor, whose water-cooled stator and windings are external to the pressure thimble. Insulation is based on a temperature of 150°F, 100% humidity, salt air, and a 100-r/hr gamma flux. The rotor of the vertically mounted motor has no shaft in the usual sense, but it is supported

on rather large antifriction bearings and is split into two segments. These are hinged or pivoted at a point outside the flux field of the stator. When any one set of windings of the stator is energized, the two rotor segments align themselves with the resulting magnetic field and are pulled radially outward from the axis of rotation toward the stator. Sets of windings are displaced around the stator, and rotation is effected by energizing these sets in a clockwise or counter clockwise sequence, as desired.

Switching of stator windings is by means of solid-state devices rather than by contacters or commutators. These in turn are controlled by a "logic" system, which is also fully solid state in nature. The displacement of the stator windings is such that switching them in and out in the proper sequence causes the motor field to move in 30-deg steps; thus the rotor is caused to step rather than to move at more or less constant angular velocities when running.

Coupling between the motor and the lead screw, which moves vertically along the motor's rotational centerline, is effected through four roller nuts. Two of these are mounted on each rotor segment beyond the hinge point and out of the magnetic field. When the motor is energized, the outward motion of the rotor segments forces the roller nuts inward to engage the threads on the lead screw. Engagement continues only as long as the motor is properly energized, which means that during rotation there are alternately one and then two adjacent stator windings energized and that at least one must always be active to hold a rod in any withdrawn position.

Two forces tend to disengage the roller nuts under normal conditions. One force component acts through the angle on the lead-screw threads and tends to seat the rod, and the other force is from a set of springs within the rotor assembly that are intended to cause disengagement when the motor current is cut off, regardless of whether the ship is upright or not. The mechanical advantage of the drive is such that the control rod moves in 1/32-in. steps, which are quite small enough to permit close control of reactor power. The maximum rod speed that can be imparted by the motor is determined by the electromagnetic characteristics of the motor itself rather than by the external timing system within the control logic. Since the motor windings have considerable inductance, an appreciable amount of time is required after power is applied to a winding before the resulting magnetic field becomes strong enough to hold or move the rotor. It follows, then, that as the stepping rate increases, the time during which power is applied to any one winding decreases and eventually becomes short enough to reduce the field strength below that required to hold the roller nuts against disengaging forces.

In a drive of this type, a temporary interruption of the motor current will result in the release of the associated control rod. If the interruption were to be of sufficient duration for the rod to fall into its seat, there would be no particular problem, but if motor current was restored while the rod was in motion, re-engagement of the roller nuts and the lead screw would subject these and other parts of the drive and supports to serious mechanical shock and possibly to permanent damage. To minimize the probability of the occurrence of such an incident, means are provided to prevent re-engagement of a released rod until it has finally

reached its seated position. Further, as noted above, the shapes of the roller nut grooves and the lead screw threads are such that there is a tendency for the two to disengage rather than to lock. Tests are said to have indicated that the drives will actually stand a reasonable number of in-motion relatches before serious damage is encountered.

Position information, except for a seated rod, is obtained by counting techniques and is quite indirect. One channel counts the pulses that effect stepping of the rotor and the other gets its signals form a proximity switch arrangement at the drive. A permanent magnet mounted on the rotor assembly inside the pressure thimble trips a proximity switch on the outside of this thimble once each revolution. By using the proper factor, the counts may be converted into control rod position. Seat information is direct, and use is made again of proximity-type switches to get around the need for bringing electrical circuits into the reactor vessel environment. Two switches are installed; one is connected into the control system and the other is held as a spare. Among other functions, the seat switch, when activated automatically causes reset of the two "position" counting channels to zero.

Marine reactors cannot depend solely on gravity to insert control rods and thereafter hold the reactor shut down by keeping the rods seated. In this design two means are provided to insert rods under emergency conditions. The first of these is a heavy helical spring installed below the drive mechanism and around the control rod extension. It is compressed as the rod is withdrawn and provides stored energy for fast rod insertion, either assisted by gravity as long as the reactor remains reasonably upright or alone at other times. The second means for emergency insertion

makes use of the rod drives themselves and depends on energy stored in an unspillable storage battery. The control system is arranged in such a manner that the capsize signal overrides others and causes all rods to drive in until their respective seat switches are activated. The motor is designed to run at least one full stroke without coolant, and the motor, the control, and battery will withstand other possible abnormal conditions for a period longer than the insertion time interval. Individual mechanical latches are included in each drive to hold the rods seated if the springs should fail.

This drive mechanism eliminates the buffer seals and purging system of the original installation. The design also eliminates the differential pressure on the rods which tended to eject them, the necessity for high power capabilities in the drive, and the hydraulic system, with its pumps, accumulators, valves, and piping. It substitutes nonspillable storage batteries, solid-state battery chargers, logic, and switching equipment. In addition to the probability that maintenance will be reduced, it is quite possible that the electrical noise contributed by contact-making devices, which usually plagues the nuclear instrumentation systems, will be substantially reduced. The stepping-motor drives permit the rods to be moved precise amounts and as a group, since they act in synchronism.

AGR Control Rod Drives

The AGR is a gas-cooled power reactor of British design having provisions for 24 rods that are assigned shim and safety functions and three other rods that work as a group under servo control for automatic power regulation.[20] While the British favor direct-lift cable-and-drum drives for many of their power reactors, this one uses duplex chain-and-sprocket

arrangement to permit the whole assembly to be fitted into a 5 5/8-in.-ID tube. The shim-safety rods weigh 285 lb, including the extension pieces, and travel 16 ft. In common with a number of British drives, however, use is made of a low-frequency, permanent-magnet, synchronous motor to power the shim-safety drive mechanisms. While it would be possible to operate these motors at any speed over a fairly wide range by simply adjusting the frequency of the applied power, only two discrete frequencies are made available. These produce speeds of 0.006 in./sec for both insertion and withdrawal and 0.06 in./sec for insertion only. As with the N.S. SAVANNAH, the shim-safety rods are held in position by applying direct current to the motor windings, although with the AGR system direct current is obtained from the special alternating-current generators by reducing their frequency to zero. The AGR system permits these rods to be moved any given amount rather than in discrete steps, although it is not clear that this is of any particular advantage. The synchronous motor does have the advantage of requiring only three leads to supply all power.

Again, comparing the system with that of the N.S. SAVANNAH, it permits much of the complicated equipment, especially that which is most likely to require maintenance, to be placed in a readily accessible area. Both systems permit all shim-safety rods or any selected grouping of them to be moved in synchronism, just as though driven from a common shaft or prime mover. Since there are few gears between the slow-speed drive motor and the drive sprocket, it is unnecessary to uncouple the motor from the rod to effect scrams. It is only necessary to turn off the motor power. This eliminates a clutch and its control. Furthermore, since the permanent-magnet motor acts as a generator when its shaft is driven, dynamic

braking may be employed to dissipate most of the energy developed in a falling rod. Two steps, or stages, of braking were found to be sufficient and the final stop is effected by an "impact stool." The braking resistors are mounted within the drive assembly, and the associated switches are operated by cams coupled to the drive mechanism. It should be noted that the reapplication of power to the motor windings while the control rod is in motion during the scram will demagnetize the permanent-magnet rotor.[21] It appears that such demagnetization would seriously reduce the braking torque, as well as reduce the normal torque for withdrawing and holding the rod. In order to prevent reapplication of motor power before the rod is seated after a scram has been initiated, it is probable that it will be necessary to provide an electrical circuit external to the normal motor control circuit.

Although position information is obtained from the single-turn brushless synchro, increments of rod motion may be determined by counting the number of cycles of the very-low-frequency voltage applied to the motor.[21] One limit switch in the shim-safety drive assembly is stated to indicate "rod latched in top position." The other switch for an interlock circuit is possibly used to indicate that the rod is seated. A slack-cable switch is provided, but its only function is to warn the operator of the condition, as protection is afforded by a free-wheeling coupling through which the rod motor drives. All insulation within the drive has class H rating, since the ambient temperature may be as high as 150°F. The mechanism operates in a CO_2 atmosphere at 270 psi, and this and the other conditions, including inaccessibility, probably explain why the synchro has no brushes but, rather, uses flexible leads to the rotor. Only one turn is used to

cover full rod travel. Means are provided for attaching a portable winding unit to the mechanism to withdraw the rod in preparation for operations such as removing the rod and mechanisms for repairs. The control rod extension units have universal joints to allow for a certain amount of misalignment between the rod and drive. The extension piece is designed to telescope to permit a reduction in the over-all length of a rod and its mechanism to facilitate handling while out of the reactor. Coupling between the chain and rod is in the form of a ball-release mechanism.

Three sets of variable-frequency generating equipment are used, one shut down and available for emergency use, one running and ready for immediate use, and one running to power the system. A versatile electrical-switching system is included that permits any alternator and any or all shim-safety rod drives to be tied to any of three busses. Normally all drives are tied to the same bus and, as indicated above, are moved simultaneously.

The regulating rod drives make use of many of the mechanical parts of the shim-safety rods and fit into the same size space. The motors are a two-phase induction type, however, and therefore the gear trains are different, and an electromagnetic brake is required. Position information is gained through a single-turn brushless synchro, just as in the case of the shim-safety drives. Five limit-type switches are added, however, and at least some of these are used as part of the control system to reposition shim-safety rods, as needed, to keep the regulating rods within their established working range. Others probably have both position information and control functions.

EDF-2 Control Rod Drives

The French EDF-2, like the AGR, is a physically large CO_2-cooled power reactor.[22] Individual cable-and-drum arrangements are used instead of a chain and sprocket to raise and lower the one hundred or more absorber rods. The interesting feature is the rather unique pneumatic and mechanical system employed to drive the cable drum. Power is derived from a pneumatic cylinder actuated by the differential pressure between the CO_2 blower seals and the reactor vessel. Since the principal advantage usually claimed for a drum-and-cable type of drive is that it requires a minimum of head room to handle long rods, powering it with a pneumatic cylinder seems to be an antithetical approach. The designer elected to use a short stroke piston, however, and to gain the needed mechanical advantage through a combination of bevel and planetary stepup gears.

Two spring-set, pneumatically released, drum-type brakes are incorporated in the drive, one acting on the planetary pinion shaft (to which this pinion is keyed) and the other on the crown gear. Releasing the latter permits the piston to drive the control rod either way, releasing both. In effect this action declutches the rod from its drive and permits it to fall relatively freely into the reactor core and effect a scram. Following a scram, if only the crown gear brake is reset, the drive piston remains decoupled from the cable drum and it may be retracted in preparation for withdrawing its rod again. Both brakes must be set to prevent a rod from drifting once it has been positioned where desired.

The linear motion of the pneumatic piston is converted to rotary motion by means of a rack driving segment, or sector, of a spur gear. Near the periphery of the sector is a fixed shaft on which the satellite pinion

of the planetary system turns. When rod motion is called for, the brake on the crown gear is released and the piston moves, driving the sector, and thus the satellite pinion, around the fixed planetary pinion, and turning the crown gear. This gear, driving through succeeding sets of bevel gears and shafts, turns the cable drum and moves the control rod. During scram action, the rod back-drives through the crown gear and satellite pinion to the now free-running planetary pinion. Rod speed during scrams is limited by means of a centrifugal friction regulator driven by the planetary pinion. This regulator consists of four spring-retracted, weighted, brake shoes that are driven by the planetary pinion, and these, when revolving, swing out to rub against a friction drum incorporated in the crown gear and thus limit the insertion speed of the associated control rod to some fairly definite maximum value.

All the mechanism, except the cable drum, its bearings, direct gears, slack-cable switch, and guides, are placed in a separate and isolated compartment and thus are reasonably accessible for maintenance. Depressurizing and, possibly, purging of the compartment are necessary, however, each time the compartment is opened for maintenance. A remotely adjustable, rotary, gas seal is employed where the drum drive shaft passes through the reactor vessel wall.

Travel limit switches are used to control the drive piston and to inform, through signal lights, that it is at one or the other travel extreme. These switches are tripped directly by a dog on the piston rod. Rod position is determined indirectly by counting the number of revolutions made by an auxiliary shaft through gears from the drum pinion shaft. The sensor appears to be a mechanically activated contact driven by a cam

on the auxiliary shaft. This shaft also has a threaded section on which a nut moves and activates a "seat" switch at one end of its travel. In addition to telling the operator that the rod is probably seated, this switch might also be used to set the crown gear brake and retract the piston following a scram.

More than one feature of this drive mechanism seems to the reviewer to leave something to be desired. For example, a pneumatic cylinder and piston make a spongy drive, and since this springiness would apparently be magnified by the stepup gears, it is conceivable that the control rod lifting cable and other parts might be subjected to some rather rough treatment if there were any sticking in the system or if cylinder pressure built up before the crown gear brake was released. Certainly it may be anticipated that rods will not be moved with precision or in synchronism, and it will be recalled that the AGR designer evidently went to some considerable trouble to provide his drive with this capability.

A second questionable feature is that the method of achieving scrams requires that two spring-set brakes release each time action is demanded. Although there are many rods, each of small individual worth, so that the loss of one or two is, hopefully, not of great importance under scram conditions, it is reasonable to inquire whether these drives have been developed far enough to apply them to an operating reactor with confidence. It is always of concern that power should be necessary to scram a rod and it seems more questionable that power should be required to activate two devices under the same circumstances to release the rod or even to effect an insertion by means of the drive itself. It would seem much more satisfactory to require power to set the brakes and activate the valves in the

control system so that all interference from these devices was removed when a scram was demanded. (A. E. G. Bates)

RELATIVE FUNCTIONS OF LOOP CONTAINMENT AND INSTRUMENTATION

Many articles have been published during the past several years that specify acceptable means for establishing the interconnection between the control systems of an experimental facility and the reactor with which it is associated.[23] Also, various systems of redundancy and coincidence have been developed to ensure reliable reactor power reduction when required.[24] As a rule, the criteria established are well understood and adhered to in the design of instrumentation for in-pile experimentation. The instrument systems for some experimental facilities have, however, been the major factor in the protection of operating personnel, the reactor, and the reactor site in the case of an accident during an experiment.

The question "What is to be protected?" must be answered when making an initial analysis of system protection. In general, the categories of protection are the following:

1. Protection of personnel against radiation, contamination, explosion, and other similar hazards.

2. Protection of the reactor site, particularly against contamination from materials used in the experiment.

3. Protection of an experimentor's materials in the experimental facility.

4. Protection of the reactor against excessive downtime that would reduce the usefulness of the reactor as a research facility.

Adequate containment of the in-pile equipment is the most effective means of reducing hazards to personnel and the reactor site. Adequate containment is usually understood to be of a redundant type in which

each barrier between the hazardous material and the area personnel has independent integrity. Although random coincident failure of all barriers is credible, in a system where the probability of independent failures is low, such coincidence has an extremely low probability. In order to assure that noncoincident failures will not jeopardize containment integrity, however, it is necessary that the condition of the barriers be monitored continuously.

After the containment system has been made as effective as is practical, further protection may be afforded by instrumentation. The primary function of this instrumentation should be to prevent the occurrence of an experimental condition which would necessitate that the containment be intact. Other less important functions would be to provide the protection required in categories (3) and (4) above.

The primary safety of the temperature-controlled capsules used for irradiation experiments in the CP-5 reactor, as described by Beck and Fousek,[25] is based on double containment, with monitoring of the inner space to detect a failure of either barrier. It is assumed that a single barrier failure will automatically, or by mandatory means, shut down the process, since subsequent failure of the second barrier would produce a situation in which there would be no containment. Out-of-pile pressure tests are used to ascertain the acceptability of the containment provisions, and temperature distribution and thermocouple accuracy are established while operating at the intended irradiation temperatures in a test stand. The protective system for these capsules, including the containment monitors, depends on temperature information. Capsule temperatures are read out on a multipoint recorder, which is equipped with

a high-temperature limit switch that is connected to the scram circuit of the reactor. The use of multipoint instruments for such protective action is not in keeping with the best practices for two reasons: (1) the primary element signal must be switched continuously and there is inadequate monitoring of the proper reclosure of the circuit, and (2) the time delay between remonitoring of the same point is excessive in comparison to the shutdown action required of the reactor. It might be well to note that in order to give reasonable protection against excessive reactor downtime, the least drastic reactor power reduction is desirable, providing the rate of temperature rise can be adequately suppressed by the rate of flux reduction.

A discussion by Atkinson and Rigg[26] clearly indicates that the mechanical structure of the experiment containment vessel is the primary safety protection against damage to the reactor site. In a graphite-carbon dioxide dynamic mass transfer experiment, the authors noted that the rig was not inherently safe in one important respect; that is, "The massive failure of the containment thimble could have serious consequences." Thus it is evident that the safety evaluation of such experiments should include a thorough study to the extent that it can be conclusively shown that the maximum credible accident will not introduce any amount of excess reactivity by any available means and, at the same time, inhibit the action of the reactor safety system.

Atkinson and Rigg point out that in a liquid-metal mass transfer experiment the greatest potential hazard is chemical, rather than nuclear. In such instances, the reduction of the neutron flux does not

materially reduce the hazard of the experiment, and such hazards can only be reduced by adequate containment. (K. W. West)

IN-CORE TEMPERATURE MEASUREMENT

(Held over from Vol. 4, No. 3)

References

1. J. E. Binns, Design of Safety Systems for Nuclear Reactors, Nuclear Safety, 4(2): 63–70 (December 1962).

2. I. M. Jacobs, Safety Systems for Nuclear Power Reactors, Trans. Am. Inst. Elect. Engrs., Part I, 76: 670–673 (1957).

3. S. J. Ditto, Redundancy and Coincidence in Reactor Safety Systems, Nuclear Safety, 2(4): 16–17 (June 1961).

4. E. Siddall, Built-in Testing in Process Instrumentation, p. 179–194 in Nuclear Process Instrumentation and Controls Conference, USAEC Report ORNL-2695, Oak Ridge National Laboratory, April 22, 1960.

5. C. S. Walker, Experience with NRX and NRU Safety Systems, Nuclear Safety, 4(2): 70–72 (December 1962).

6. R. S. Stone, Oak Ridge National Laboratory, personal communication to E. P. Epler.

7. D. P. Rouix and S. H. Hanauer, On the Use of Gamma Radiation as a Reactor Control and Safety Parameter, Trans. Am. Nucl. Soc., 6(1): 6 (June 1963).

8. C. G. Lennox, A. Pearson, and P. R. Tunnicliffe, Regulation and Protective System Design for Nuclear Reactors, Canadian Report AECL-1495, April 1962.

9. E. P. Epler, HTRE-3 Excursion, Nuclear Safety, 1(2): 57–59 (December 1959).

10. M. A. Schultz, Reactor Safety Instrumentation, Nuclear Safety, 4(2): 1–13 (December 1962).

11. The N.S. SAVANNAH Safety Assessment, Vol. IV, Analyses of Hypothetical Accidents, November 1960.

12. E. Vincens, Electric Power Systems of Nuclear Power Plants, Nuclear Safety, 2(1): 32–42 (September 1960).

13. R. E. Heffner, Failure of SPERT-III Pressurizer Vessel, Trans. Am. Nucl. Soc., 5(1): 135 (1962).

14. S. H. Hanauer, Instrumentation for Containment, Nuclear Safety, 3(1): 41–46 (September 1961).

15. D. G. Breckon and J. H. Collins, Control and Safety in the Operation of the NRX and NRU Reactors, Canadian Report AECL-1486, April 1962.

16. A. E. G. Bates, Control Rods and Control Rod Drives in Power Reactors, Nuclear Safety, 2(4): 17–37 (June 1961).

17. Wm. B. Cottrell, SL-1 Final Report, Nuclear Safety, 4(3): ____ (March 1963).

18. A. E. G. Bates, Control Rods and Control-Rod Drives in Power Reactors, Nucl. Safety, 2(4): 17–37 (June 1961).

19. Marvel-Schebler Products Division of Borg-Warner Corporation and the Babcock and Wilcox Company, NS Savannah Replacement Control Rod Drives Safeguards Report, USAEC Report BAW-1249, Volume I, October 1962.

20. A. D. Wright and K. F. Lebeau, Control Rod Systems for AGR, Nucl. Eng., 6(59): 159–161 (April 1961).

21. Personal communication from R. J. Campbell of UKAEA, at site of AGR, via C. S. Walker, Oak Ridge National Laboratory, March 1962.

22. M. Bienvenu et al., The Second Nuclear Power Station, Nucl. Power, 5(48): 118–123 (April 1960).

23. S. H. Hanauer, Safety System Interconnections Between Experiment and Reactor, Nucl. Safety, 2(1): 29–30 (September 1960).

24. S. J. Ditto, Redundancy and Coincidence in Reactor Safety Systems, Nucl. Safety, 2(4): 16–17 (June 1961).

25. W. N. Beck and R. J. Fousek, Instrumented Temperature-Controlled Capsules for Irradiations in the CP-5 Reactor, USAEC Report ANL-6554, Argonne National Laboratory, October 1962.

26. J. R. Atkinson and S. Rigg, Design of Irradiation Experiments, J. British Nucl. Energy Soc., 1(1): 69–85 (January 1962).

IV. PLANT SAFETY FEATURES

LEAK TESTS OF CONTAINMENT VESSELS

The establishment of an acceptable leak rate, the design of the leak rate test or tests for determining the acceptability of the containment vessel, and the evaluation of the data from the leak tests constitute an important chain of events in the determination of the operability of a reactor employing gas-tight containment. Previous articles in Nuclear Safety have dealt with leaktightness specifications[1,2] and the techniques involved in leak testing diverse types of container structures and their components,[3,4] but the evaluation of leak test data has received little attention. The following review presents a brief critique of methods currently in use for analyzing the test data.

Analysis of Leak Test Data

The only convenient method developed to date for leak testing large gas-tight containment structures has involved the use of pressure drop observations to determine the mass of air within the shell as a function of time and, consequently, the leak rate. The pressure of the container is influenced, however, by the temperature distribution of the gas mass and the presence of condensable vapors. Corrections must therefore be made to pressure drop data to determine a valid leak rate.

In the leak testing of large gas-tight containment structures by the so-called "absolute" or "reference-vessel" techniques, the temperature sensors or reference vessels employed in the tests provide data or means with which to obtain the mass of the gases in the containment vessel as a function of time by use of the ideal gas law:

$$PV = NRT \quad . \tag{1}$$

In the containment vessel the pressure, P, will be everywhere equal, except for an insignificant error resulting from the hydrostatic pressure difference. The temperature, T, and specific volume, V, may, however, vary markedly throughout the volume of the vessel, so numerous sensors are usually required to determine these values. In expression (1), R is the gas constant and N is the number of moles of gas.

The "reference-vessel" leak-testing technique provides automatic compensation for the variances in T and V throughout the containment vessel if proper placement of the reference vessels has been made (i.e., a true averaging) and if the thermal characteristics of the reference vessels result in close temperature coupling of the containment-vessel gases and the reference-vessel system. On the other hand, in the "absolute" method, T and subsequently V are determined by means of the temperature sensors. In analyzing the temperature data to determine T and V, the data may be lumped so that mean $\overline{T}$ and $\overline{V}$ values are determined for the entire volume. Alternatively, it may be considered that each sensor provides a value of the temperature, T_1, T_2, T_3 ..., T_n, that corresponds to a particular fractional volume of the containment vessel, V_1, V_2, V_3 ..., V_n. In both analyses the mass is essentially determined as a result of a summation of either n equal volumes or n arbitrarily sized volumes. The scatter of the calculated leak rate by the "absolute" or "reference-vessel" methods is thus an obvious function of the magnitude of the diurnal temperature swings and of the matching of the temperature sensors or compensators to the correct volume in the summation process.

If the scatter of the calculated leak rate is large, for example, of the same order as the mean of the leak rate, it is necessary to make an assessment of the accuracy of the data. A not too uncommon approach, although not a rigorous one, is to consider that the scatterband contains the maximum deviation from the mean value. A rigorous approach would require the use of statistical analysis. Although estimated errors or uncertainties have been given in connection with published data on containment vessel leak detection, it is not clear that statistical methods were used in the analyses of any of the tests. The errors that have been reported appear to refer to instrument errors or to represent an educated guess; consequently they do not represent errors that occurred in the summation process. It is therefore a somewhat difficult problem to assess the degree of success in obtaining a true mean value of the leak rate and a satisfactory number for the maximum uncertainty. The confidence level, or confidence limit factor, that should be used for evaluating the maximum uncertainties in leak rates has not been established, but despite the apparent lack of use of statistical analysis heretofore, the method will undoubtedly have increased use where large temperature and humidity variations occur during the test period.

Reduced-Pressure Leak Testing

Interest in reducing the cost of leak testing and the potential damage to instrumentation or other equipment of tests at the containment-vessel design pressure has stimulated considerable study of leak testing at differential pressures lower than the design value and lower than those expected from an accident. In order to determine a suitable

factor for extrapolating from the reduced-pressure test data, the modes of leakage possible through a "gas-tight" shell have been investigated.

Von Traube[5] has defined a leak-rate ratio for laminar flow:

$$\frac{L_B}{L_A} = \frac{P_B\left[1 - \left(\frac{P_{EB}}{P_B}\right)^2\right]\mu_A}{P_A\left[1 - \left(\frac{P_O}{P_A}\right)^2\right]\mu_B},$$

where $L = m'/m$,

m = total mass of the gas in the containment vessel per unit of time,

m' = gas mass escaping from the containment vessel,

P = pressure,

μ = dynamic viscosity,

and the subscript B denotes the accident condition, A the reduced-pressure condition, EB the external pressure for the accident condition, and O the external pressure for the test condition.

The work of Keith[6] and of Von Traube[5] has demonstrated that viscous flow will result in the largest difference between the leak-rate ratio for reduced-pressure tests and that for design-pressure tests. Keith performed experiments on flow into a vacuum through standard leaks (1.43×10^{-5}, 1.05×10^{-6}, and 1.41×10^{-7} cm^3/sec at atmospheric pressure), and he varied the upstream pressure. A log-log plot of the leak rates versus the upstream pressures gave slopes of 1.24, 1.218, and 1.063, respectively, for the indicated standard leaks. No deviation from a straight line was indicated by the plots, even though over a portion of the line the pressure ratio exceeded the value required for sonic flow. Since a slope of 2 represents laminar flow and a slope of 1 may represent

molecular, turbulent, or multiple-contraction flow, it is not possible to define precisely the characteristic flow of the leaks. In all cases the flow appeared to be a combination of laminar, molecular, etc. Von Traube[5] contends that the most probable type of flow that would be experienced through a containment shell would be flow characterized by multiple contractions. The argument followed by Von Traube is a plausible one based on the fact that the shell will have undergone critical nondestructive inspection that will discover major flaws, so the leak path will probably consist of small interconnected pores having roughnesses of the order of 10^{-2} mm occurring on a mean spacing of 10^{-1} mm. Roughnesses of this order would usually preclude any appreciable viscous flow because of the expansions and contractions that would occur. Although the leak sizes tested were small compared with the leak rates of some containment shells, the data of Keith,[6] indicate, on the other hand, that the leaks were at least partially laminar in nature.

It does not appear advisable to use a leak rate smaller that that predicted on the basis of laminar flow until sufficient additional tests have been made to determine adequately the actual flow modes of the various types of containment vessels. The use of the leak-rate ratio for laminar flow should result in a valid, conservative extrapolation of the reduced-pressure leak rate.

The containment vessel of the N.S. Savannah reactor was tested by the reduced-pressure method because testing at the accident pressure was considered to involve too great a risk to personnel and equipment at the shipyard. Where safety considerations, such as existed for the N.S. Savannah, economics, or other considerations justify the use of reduced-

pressure leak testing, the approach appears in no way to jeopardize or to compromise the safety analysis of the plant. (G. C. Robinson)

CRITICALITY CONTROL IN FUEL-PROCESSING PLANTS

This article, the third of a series[7,8] of reviews of hazards and safeguards in the processing of irradiated reactor fuels, covers recent developments in criticality control. The information discussed was obtained from recent reports and from papers presented at the 142nd Meeting of the American Chemical Society (Atlantic City, Sept. 9–14, 1962) and the Annual Meeting of the American Institute of Chemical Engineers (Chicago, Dec. 2–6, 1962).

The methods of criticality control may be divided into two general categories: equipment design and process design. In equipment design control, each piece of equipment is designed so that accidental criticality is prohibited because of excessive neutron leakage or neutron absorption over the range of credible normal and abnormal process conditions. Information on critical geometry as a function of fissile material type and conditions, neutron interaction between subcritical units, and the effect of fixed poisons are of interest in the application of this type of control. Process design control limits criticality by modifications in the process, such as control of the concentration of the fissile material solution, batch size control, and soluble poison control. Because operational errors are more likely to negate process control than design control, multiple independent safeguards, such as interlocks and adequate procedural controls, are important.

Bases for Equipment Design

The generally accepted method for the determination of adequate neutron leakage for equipment design control is to obtain criticality data

for the required material at the appropriate conditions and to use the relatively simple and reliable method of "bare-buckling" conversion, with an appropriate safety factor, to obtain the dimensions of a vessel with the desired shape. This has already been done for many practical applications; for example, the Nuclear Safety Guide[9] gives safe dimensions for spheres, pipes, and slabs as a function of the type of fissionable material, concentration, and reflection. Subsequent revisions of the Nuclear Safety Guide will incorporate new data as they become available.

The density analog method for the determination of neutron interaction of subcritical components in air is currently receiving widespread interest. The method and the results of initial experiments[10,11] were described by Thomas at the 55th meeting of the American Institute of Chemical Engineers. The method is based on the observation that the number of subcritical units in a cubic or spherical array in air is directly proportional to the inverse ratio of the average density of fissile material in the array to that in a unit. The value of the negative exponent and the constant of proportionality depend on the degree of reflection of the array and the moderation and reactivity of the individual units. Knowledge of the number of units in a critical cubic or spherical array permits the design of a safe array for storage of equivalent units at the same average fissile material density.

Schuske has reported[12] experience at Rocky Flats in performing in-situ low-level neutron-multiplication measurements that permit verification of the safety of process vessels that have been designed without benefit of a related critical experiment. This technique obviates the necessity for inclusion of a large safety factor in the design of unique

vessels. It has been used to define the criticality parameters of various process vessels at the Rocky Flats Plant on several hundred occasions.

Use of Fixed Poisons

Fixed poisons may be used in equipment design control either on the outside of vessels to partially negate the effects of reflection or interaction or as a lattice on the inside of vessels to decrease the neutron multiplication in the medium. Thin sheets of cadmium have been used on the outside of vessels and boronated stainless steel and borosilicate glass have been used on the inside of vessels.

Cadmium-Covered Vessel. In general, an analogy should be made to a related critical experiment for a specific design. The effect of covering a vessel containing a fissile solution with a 20- to 30-mil sheet of cadmium is to cause the vessel to have an "equivalent" reflector thickness of no more than 1 in. of water or steel, even if the cadmium-covered vessel is surrounded by a thick layer of water. Also, a cadmium lining and hydrogenous moderator on the inside of an annular cylindrical-shell vessel will tend to prevent neutron interaction and to give neutron-multiplication properties similar to those of a nominally reflective slab, that is, a slab less than or equivalent to 1 in. of water. Experiments that show these effects have been performed at Oak Ridge.[13,14] An annular cylindrical-shell vessel lined on the inside and outside with cadmium and hydrogeneous material was used by ORNL for shipment of 28 kg of U^{233} solution at a concentration of 200 g/liter.[15] The inside and outside diameters of the solution annulus were approximately 38 and 42 in., respectively, giving a solution annulus thickness of 1.9 in.

Boronated Steels. Experimental work by the Dow Chemical Company,[16] initiated by the Phillips Petroleum Company, indicates that appropriately spaced parallel plates of boronated stainless steel will permit safe storage of large quantities of fissile solutions in large process vessels. Neutron-multiplication measurements were made in a 36-in.-diam tank using 0.138-in.-thick plates of 1 wt % boronated stainless steel as a function of plate spacing and enriched uranium (~90% U^{235}) solution concentration. The experiments indicated that for an edge-to-edge plate spacing of 1 in., an infinitely tall, 3-ft-diam, unreflected tank could not be made critical with a U^{235} solution concentration less than approximately 190 g/liter. For a plate spacing of 1.5 in. edge to edge, it was indicated that a U^{235} solution concentration of greater than 90 g/liter would be required for criticality.

Studies conducted at the Phillips Petroleum Company, as reported by M. E. Weech at the 142nd American Chemical Society meeting, have related to the use of parallel 1% boronated stainless steel plates as a fixed poison for process vessels. Such poison material has been installed in 3-ft-diam process tanks and a design has been prepared for a 12-in.-diam pulse column in which boronated stainless steel is used for the column plates and in the disengaging end sections. Although the cost of such a poisoned vessel is high ($3.15 per lb of 0.138-in. 1% boronated stainless steel plate), it has been found that they are competitive with "geometrically safe" vessels and are desirable in that they occupy less cell space than an array of "organ-pipe" vessels per unit of fissile solution volume. It has been shown that the corrosion resistance of boronated stainless steel is essentially equivalent to that of the base stainless steel for boron contents less than 1.5 wt %.

Boronated Glass Raschig Rings. Vessels packed with borosilicate glass raschig rings as a fixed poison are being used at both Rocky Flats and at Oak Ridge. Conventional 3- to 4-ft-diam vessels may be rendered safe for handling fissile solutions at concentrations of 100 to 200 g/liter by packing them with 1.5- to 1.75-in. borosilicate glass raschig rings containing approximately 4 wt % boron (Corning 7740, Pyrex, Kimble KG-33, or Kimax) or approximately 5.7 wt % boron (Corning 7052 or Kimble EN-1) so that the glass occupies 20 to 25% of the volume. The cost of the glass packing, about $30 per cubic foot, is significantly lower than the cost of a comparable boronated stainless steel lattice. Although the glass is more fragile than steel, it has been shown that the breakage resistance is adequate for many process applications.

Critical experiments with solutions of U^{235} in tanks packed with 1.5- to 1.75-in. glass raschig rings of various boron contents have been performed at Oak Ridge.[17,18] These experiments show that a tank of any size uniformly packed with 1.5- to 1.75-in. borosilicate glass raschig rings containing 5.7 wt % natural boron so that the glass occupies 24.1 vol % of the tank cannot be made critical with enriched uranium solution containing less than 380 g of U^{235} per liter. The critical concentration is greater than 255 g of U^{235} per liter for tanks of any size uniformly packed with 4 wt % natural boron rings that occupy 24.1% of the volume of the tank.

The use of 5.7 wt % borosilicate glass raschig rings as a fixed neutron poison at Rocky Flats was described by Schuske and Kelchner at the 55th AIChE meeting. At Rocky Flats it was decided to use the 5.7 wt % boron borosilicate glass, although it has less corrosion resistance than

4 wt % boron glass, since it provides a larger criticality safety factor. The Rocky Flats installation has many large-diameter conventional tanks packed with the rings for storage of U^{235} solutions. They also utilize 55-gal drums packed with rings and mounted on casters for transferring U^{235} solutions around the plant.

Operating experience with the rings at Rocky Flats has been very satisfactory, although after 1 to 2 years of use the rings are more fragile than new, annealed rings and sometimes have a multitude of small cracks, particularly those rings which have been exposed to temperature cycles in uranyl nitrate solutions. Corrosion of the glass occurs at such a low rate that contamination of the uranium product is not significant. The annealed rings are being replaced with tempered rings because it has been found[19] that tempered 5.7 wt % boron rings are less fragile and have satisfactory resistance to chemical etching.

At the Oak Ridge National Laboratory, 4 wt % boron glass (Pyrex or Kimax) in the form of 1.75-in. raschig rings occupies 24% of the volume in miscellaneous 1- to 6-ft-diam vessels, including expanded column end sections, in a U^{233} solvent-extraction process.[20,21] The height of the rings in the vessels is checked periodically by gamma radiography and by liquid-level calibration.

A shielded carrier packed to 24 vol % with 1.75-in.-diam, 5.7% boron annealed rings has been used for interlaboratory transfer of 11 kg of U^{235} at a concentration of 200 g/liter.[20] Drop tests made with a simulated carrier, prior to the shipment, revealed that a single drop of 3 ft onto an unyielding surface resulted in breakage of approximately 20% of the rings and about a 5% decrease in packed height. Five successive drops

from a height of 5 ft resulted in breakage of approximately 50% of the rings and about a 20% decrease in the packed height.

Oak Ridge National Laboratory personnel chose to use 4% boron glass (Pyrex or Kimax) for process applications on the basis that it provides sufficient neutron absorption for the envisaged conditions and has significantly better resistance to corrosion than the 5.7% boron glass. In recent tests,[22] annealed and fire-polished borosilicate glass raschig rings of 4 and 5.7% boron glass were exposed to 2 and 6 M HNO_3 at 25 and 65°C for 650 hr. There was no discernible attack or weight change in the 4% boron glass in any of the experiments. The high boron content rings were noticeably etched and lost 0.01 to 0.02% in weight for both acid concentrations at 25°C; at 65°C the etching was severe, the weight loss was approximately 0.1%, and chipped edges and internal cracks were observed.

Use of Soluble Poisons

The reviewer reported on studies[23] of the potential for use of soluble poisons for criticality control in shielded radiochemical plants at the 142nd ACS meeting. The studies included multigroup machine calculations of the required content of poison (boron, cadmium, gadolinium, and samarium) in solutions of fissile and fertile material and a compilation of data on detection, solution stability, methods of removing poisons from the product, and costs of typical neutron poisons. The studies indicated that the use of soluble poisons as a primary criticality control offers significant economic and other advantages in that it permits the factors of vessel size and shape to be dictated by considerations other than those

of criticality. It was stated that soluble poison control can be made as reliable as present methods of procedural control if the application is preceded by adequate development work and is monitored by multiple, independent safeguards.

At the Oak Ridge National Laboratory, managerial endorsement was given for a proposed use of soluble poisons as a primary criticality control in a remotely operated, shielded, and contained radiochemical facility in which due precautions were to be taken to ensure the addition of poison and stability of poison in solution. At the present time the only use of soluble poisons as a primary control at the Laboratory has been in the movement of the homogeneous reactor fuel solution inside the Laboratory. It has been used as a secondary control on numerous occasions in washing and decontaminating plant vessels that potentially contain fissile material. (J. P. Nichols)

CONTAINMENT OF GAS-COOLED POWER REACTORS

(Held over from Vol. 4, No. 3)

EMERGENCY DECONTAMINATION PROCEDURES AT CHALK RIVER

(Held over from Vol. 4, No. 3)

References

1. E. D. Arnold and J. P. Nichols, Hazards Analysis of Chemical Processing Facilities, Nucl. Safety, 3(1): 56–60 (September 1961).

2. W. R. Gall, Reactor Containment Design, Nucl. Safety, 3(4): 52–58 (June 1962).

3. G. C. Robinson, Containment Vessel Leak Detection, Nucl. Safety, 1(1): 29–30 (September 1959).

4. G. C. Robinson, Leak Tests of Containment Structures, Nucl. Safety, 3(3): 38–40 (March 1962).

5. Von K. Traube, Determination of Leakage Rates of Reactor Safety Containers at Low Test Pressures, Atomkernenergie, 6: 309–317 (July–August 1961).

6. J. H. Keith, Leak Rate Versus Absolute Pressure Studies Completion Report (Project D-P-0131), USAEC Report Y-1347, Union Carbide Nuclear Company, Y-12 Plant, May 16, 1961.

7. J. C. Suddath, Fuel-Processing Hazards, Nucl. Safety, 1(2): 44–46 (December 1959).

8. J. P. Nichols, Fuel-Processing Hazards, Nucl. Safety, 2(2): 45–48 (December 1960).

9. F. E. Woltz et al., Nuclear Safety Guide, USAEC Report TID-7016, Rev. 1, 1961.

10. L. W. Gilley et al., Critical Arrays of Neutron-Interacting Units, pp. 159–167 in Neutron Physics Division Annual Progress Report for Period Ending September 1, 1961, USAEC Report ORNL-3193, Oak Ridge National Laboratory, October 1961.

11. J. T. Thomas and J. K. Fox, Critical Cubic Arrays of Neutron-Interacting Units of Aqueous Uranyl Nitrate Solution, p. 37 in Neutron Physics Division Annual Progress Report for Period Ending September 1, 1962, USAEC Report ORNL-3360, Oak Ridge National Laboratory, October 1962.

12. C. L. Schuske, Criticality Measurements Performed In Situ, USAEC Report RFP-245, Dow Chemical Company, November 1961.

13. C. K. Beck et al., Critical Mass Studies, Part III, USAEC Report K-343, Oak Ridge Gaseous Diffusion Plant, April 1949.

14. J. K. Fox and L. W. Gilley, Critical Parameters of Poisoned Annular Cylinders Containing Aqueous Solutions of U^{235}, pp. 31–33 in Neutron Physics Division Annual Progress Report for Period Ending September 1, 1958, USAEC Report ORNL-2609, Oak Ridge National Laboratory, October 1958.

15. Oak Ridge National Laboratory, Criticality Studies, p. 28 in Chemical Technology Division Annual Progress Report for Period Ending May 31, 1961, USAEC Report ORNL-3153, September 1961.

16. C. L. Schuske and G. H. Bidinger, Nuclear Safety Measurements on Systems Containing Boron and Enriched Uranium, USAEC Report RFP-246, Dow Chemical Company, October 1961.

17. H. C. Paxton, Critical Data for Nuclear Safety Guidance, pp. 24–27, USAEC Report LAMS-2415, Los Alamos Scientific Laboratory, May 1960.

18. J. K. Fox and J. T. Thomas, Critical Experiments with Mixtures of Aqueous U^{235}-Enriched Uranyl Nitrate Solutions and Borosilicate Glass Rings, pp. 35–36 in Neutron Physics Division Annual Progress Report for Period Ending September 1, 1962, USAEC Report ORNL-3360, Oak Ridge National Laboratory, October 1962.

19. C. L. Schuske and H. W. King, Durability Tests on Pyrex Raschig Rings, USAEC Report RFP-285, Dow Chemical Company, September 1962.

20. Oak Ridge National Laboratory, Criticality Studies, pp. 215–216 in Chemical Technology Division Annual Progress Report for Period End-ind June 30, 1962, USAEC Report ORNL 3314, September 1962.

21. E. C. Moncrief et al., Oak Ridge National Laboratory, November 1962 (unpublished).

22. Oak Ridge National Laboratory, Borosilicate Glass Rings as Nuclear Poisons, p. 19 in Chemical Technology Division Annual Progress Report for Period Ending May 31, 1961, USAEC Report ORNL-3153, September 1961.

23. J. P. Nichols, Soluble Neutron Poisons as a Primary Criticality Control in Shielded and Contained Radiochemical Facilities, USAEC Report ORNL-3309, Oak Ridge National Laboratory, July 1962.

V. CONSEQUENCES OF ACTIVITY RELEASE

WORLD-WIDE RADIOACTIVE FALLOUT FROM NUCLEAR TESTS

L. Machta*

The detonation of a nuclear device in the atmosphere releases over 200 nuclides, most of them radioactive, with half-lives ranging from less than a second to millions of years. Many of the species can enter the human body through inhalation or, more importantly, through ingested food and water. Others, mainly gamma emitters, can also irradiate the body externally. The many problems in the assessment of the fallout hazard from nuclear tests include atmospheric transport, movement through the food chain, and evaluations of the body damage. This series of two articles is limited to the history of the radioactivity from the time of its formation to its deposition on the earth's surface or uptake by the ocean. This is the first of the two articles; it presents nonmeteorological background material, that is, information on the formation of radionuclides, their properties, and initial distribution and, finally,

---

*Lester Machta was born in New York, New York, in 1919, and he graduated cum laude from Brooklyn College in 1939. During the war he taught meteorology in both civilian and military capacities for the Air Force. He did graduate work in meteorology, receiving his M.A. from New York University in 1946 and his Sc.D. from Massachusetts Institute of Technology in 1948. He joined the Weather Bureau in 1948, has since been concerned with work on atmospheric radioactivity, and is now Chief of the Meteorological Research Projects Branch, Office of Meteorological Research. He was a member of the U.S. I.G.Y. Nuclear Radiation Committee, is currently a member of the World Meteorological Organization's Panel of Experts on Atomic Energy, and in 1958 went to Geneva with the U.S. delegation to the atomic test moratorium conference. He has participated in several of the U.S. atomic test series and has been an advisor to the U.S. delegation of the United Nations Scientific Committee on the Effects of Atomic Radiation as well as on the Working Group of the Federal Radiation Council. He is a reporter for the Meteorology Committee of the National Academy's Committee on the Biological Effects of Atomic Radiation and has been given a Gold Medal for exceptional service by the Department of Commerce.

the calculated and observed inventories of selected nuclides. The second article, which will appear in a forthcoming issue of Nuclear Safety, will cover the atmospheric transport and removal processes in the light of a large body of fallout measurements.

Formation of Bomb-Produced Radionuclides

Fission and Fusion Products. Nuclear devices derive their energy from either fission or fusion. The fissioning of certain heavy nuclei such as U^{235} or Pu^{239} results in a series of nuclides in the 70 to 170 atomic mass units range, most of which are unstable. The interest of the health physicist and meteorologist in selected isotopes depends on abundance, radioactive half-life, biological uptake, and certain other factors. A list of the fission products commonly of interest in atmospheric fallout studies is given in Table V-1.

In the case of a fusion explosion, essentially only one radioactive product, tritium, is released. It has a 12.5-yr half-life and is only of slight significance as a radioactivity hazard (relative to some fission radionuclides), but it is of considerable value and irritation to the geophysicist. It is of irritation because it obscures the natural distribution.

Fissionable Material and Induced Activity. In addition to the radioactivity resulting from the fission process, unspent fissionable materials, such as U^{235}, Pu^{239}, and U^{238}, also contribute to the burden of radionuclides from detonation of a fission weapon, but relatively few measurements of the concentration or deposition of these long-lived alpha emitters are reported in the literature.[1] In the case of fusion weapons employing tritium, unspent tritium is also added to the atmosphere.

Table V-1. FISSION PRODUCTS OF INTEREST IN ATMOSPHERIC FALLOUT STUDIES

Fission Product	Half-Life	Fission[a] Yield (%)	Type of Emission	Reason for Interest
I^{131}	8 d	2.89	Beta, gamma	Collects in and irradiates thyroid
Ba^{140}	12.8 d	5.18	Beta, gamma	Ratio to a longer lived fission product permits debris dating
Sr^{89}	50.5 d	2.56	Beta	Collects in and irradiates bone; also used to date debris
Zr^{95}	65 d	5.07	Beta, gamma	Produces external gamma irradiation; also used to date debris in conjunction with other fission products
Ce^{144}	288 d	4.69	Beta, gamma	Used to date debris in conjunction with other fission products
Sr^{90}	28 y	3.50	Beta	Collects in and irradiates bone
Cs^{137}	30 y	5.57	Gamma, beta	Collects in and irradiates muscle tissue; irradiates whole body, both internally and externally

[a]N. Hallden et al., Radioactive Decay of Weapon Debris, pp. 194–199 in Fallout Program Quarterly Summary Report, USAEC Report HASL-117, 1962.

Another class of bomb-produced radionuclides is created by neutrons escaping from the nuclear explosion. For example, a U^{238} atom captures a neutron and 2.3-d Np^{239} results. The radioactivity from this gamma emitter can equal the total activity of the gross fission products in the first few days. Other induced activities produced from neutron capture by the fuel or the bomb casing have been reported, such as the U^{237} formed through an (n,2n) reaction in U^{238} (which may be taken as an indication that the explosion is thermonuclear), Mn^{54}, Co^{57}, Co^{58}, and Co^{60}. In addition certain nuclear tests have released W^{181}, W^{185}, and Rh^{102}. If the nuclear detonation takes place near the earth's surface, about 50% of the neutrons may react with the nuclei of the soil. Some of the resulting induced radioactive species of relatively short half-lives are Si^{31}, Al^{28}, and Na^{24}. Examples of longer lived soil-induced radionuclides are Zn^{65}, Fe^{55}, Fe^{59}, and Mn^{54}. If the neutrons are captured by ocean water, as in the case of a surface or shallow undersea explosion, radioactive isotopes of K, P, Cl, Mg, S, and Cd, as well as Zn^{65}, are created.

In an air burst, large numbers of escaping neutrons are captured by atmospheric nitrogen to produce radioactive C^{14}. It is believed that this long-lived radionuclide (5570-y half-life) converts quickly to $C^{14}O_2$ and becomes part of the earth's CO_2 inventory. As CO_2, C^{14} passes into the oceans or the biosphere and becomes part of man's organic constitution. Carbon-14 is of special value to the geophysicist as a gaseous tracer, although it is also a nuisance because it masks the natural distribution of C^{14}.

Chemical and Physical Properties of Fallout

Chemical Composition. The chemical composition of particulate aerosols associated with world-wide (as opposed to local) fallout is not well known.[2] It is likely that many of the radionuclides are oxides, but some generated over the coral of the Marshall Islands have been carbonates. In general, the debris collected far from the proving grounds tends to be soluble and hence available to animals.[3-5] Tritium is believed to be primarily in the form of water and C^{14}, as gaseous CO_2.

Size of Particles in Aerosols. The size of radioactive aerosol particles is important in evaluating the role of gravitational settling in atmospheric transport. Nuclear tests conducted at or near the earth's surface suck up particles of sufficient size that some are coated with radioactivity and fall back to the ground in a matter of hours as local fallout. These particles must be greater than about 50 μ in diameter. Those that remain airborne in the upper atmosphere for months or years must be very small, most likely below 1 μ in diameter. The debris injected above about 45,000 ft (i.e., in the stratosphere) that remains airborne beyond a few weeks or months is small enough to have a negligible settling speed. This assumption has been challenged[6] by those who believe that the gravitational decent is important. Measurements of particle size in the stratosphere by a variety of techniques confirm the submicron nature of the radioactive particles.[1,7,8] Particles from tests in the atmosphere are believed to be smaller than those from tests at or near the earth's surface. It is possible that some bomb-produced particles attach themselves to larger naturally occurring aerosols later in their history, particularly in the dusty lower atmosphere. Ground-level

measurements of radioactive particles almost certainly having originated in the stratosphere suggest a larger fraction greater than 1 μ in diameter in the troposphere than that found in the stratosphere. It appears likely, in summary, that in the weeks following a nuclear test, the size distribution of bomb-produced radioactive particles includes a fraction of particles with a significant fall rate (i.e., greater than 30,000 ft per week). At later times, the upper air, being depleted of these larger particles, consists primarily of submicron radioactive particles.

Fractionation. The relative abundance of various fission products soon after a nuclear explosion can be determined theoretically from knowledge of the fuel and from experimental studies.[9] Frequently the observed relative distribution of the fission products differs markedly from that expected. This difference is referred to as fractionation. Some of the mechanisms that produce fractionation are known, but the explanation of all the differences in distribution cannot be said to be complete. For example, some radioisotopes that have gaseous precursors, such as Sr^{90}, may not be in existence when condensation takes place in the nuclear cloud. Thus, local fallout will be depleted in Sr^{90}, and residual world-wide fallout will be consequently enriched. Fractionation is a serious problem in trying to date debris from the ratios of isotopes of differing half-lives. The sample being dated may not have the correct proportion of atoms of the two isotopes (allowing for decay) called for by theory at formation time because of fractionation. Intuitively and experimentally, it is evident that there will be less fractionation when no soil or water is sucked into the fireball to produce local fallout of heavy particles.

The Environment of a Nuclear Explosion

Surface. A nuclear explosion whose fireball is in contact with the earth's surface is considered to be a surface explosion. The soil or water melts or vaporizes. During the cooling stage in which condensation occurs, the nonradioactive debris is in intimate contact with the fission products, unspent fuel, and induced radioactivity, so activity attachment takes place. The larger particles settle out of the atmosphere when the rising motion ceases. Deposition on the ground begins about 30 min after a megaton-yield explosion (a megaton is the energy equivalent of 1 million tons of TNT or about 1×10^9 kwhr) and lasts for perhaps 18 hr. Predominantly horizontal winds transport the falling particles downwind of the explosion site. This deposited radioactivity is called local fallout. Its gamma radiation emits hundred or thousands of roentgens per hour early in the fallout history and can be extremely hazardous to man. Consequently, the area into which this local fallout deposits during nuclear testing is carefully controlled.

The radius of the fireball for fallout purposes has been found to be $180\ W^{0.4}$ ft, where W is the total yield of the nuclear explosion in kilotons of equivalent TNT energy.[10] Thus, the maximum height of burst for creating local fallout or for the explosion to be considered a surface type of detonation is about 600 ft for a nominal or 20-kiloton explosion and about 3000 ft for a megaton test.

The fraction of radioactivity deposited in local fallout and hence unavailable for residual world-wide dispersal depends on the volume of the fireball that lies, hypothetically, below the earth's surface and the nature of that surface. Unfortunately, quantitative estimates of the

amounts of local fallout are very uncertain. A frequently quoted range for a surface land burst is 50 to 80% local fallout of the gross fission products. A similar surface water range (experience is limited to barges resting on the ocean) is perhaps 30 to 50%. As the height of burst rises above the earth's surface, local fallout decreases; that is, if the fireball barely touches the earth, practically no local fallout results. It has been observed that when a rising dusty column merges with the ascending cooled fireball from an explosion that never contacted the ground, essentially no local fallout occurs.

Air. The fireball makes no contact with the earth's surface in an air burst. In this case, it is believed that the cooled radionuclides condense on the bomb material or into molecular aggregates.[11] It is on this account that the particle-size distribution is heavily weighed toward the submicron range. For purposes of world-wide fallout, an air burst is characterized as relatively unfractionated. There is maximum production of C^{14} and a need to consider all the radioactivity created or induced by the burst (no loss by local fallout).

A special case for very high air bursts (not treated here) involves the possible loss of a fraction of the debris to space. Aside from the reduction in the available radioactivity and certain meteorological and monitoring complexities (to be discussed in Part II), this source of bomb debris may be considered in the same way as debris from other air bursts.

Subsurface. Underground nuclear tests detonated so as to permit venting also add to the atmosphere's burden of radioactivity, and all undersea nuclear explosions, shallow or deep, release portions of their radioactivity into the air.[12] Deep underground nuclear detonations of

sufficiently small energy can be entirely contained. Shallow underground explosions of sufficient strength can break the earth's crust and throw much dirt and some radioactivity into the atmosphere. Some underground nuclear explosions, while failing to break through the earth's crust, produce fissures through which radioactive gases can slowly escape. In general, the fission products from subsurface nuclear tests are strongly fractionated.

Cloud Distribution and Rise. Many of the characteristics of the initial nuclear cloud are now established. Almost all the radioactivity resides in the cloud or mushroom head rather than in the stem, but the distribution of the activity within the cloud or head is not known. The distribution of radioactivity in the mushroom cloud is important because, in the case of low-megaton-yield nuclear clouds, the radioactivity straddles the tropopause. Above the tropopause, that is, in the stratosphere, debris will have a relatively long residence time, but in the troposphere below the tropopause, the deposition proceeds more quickly. It is therefore important to know whether the radioactivity in the cloud is uniformly distributed or resides in the upper part (i.e., in the stratosphere) or the lower part (i.e., the troposphere) of the cloud. Present thinking favors either uniform distribution or a greater concentration in the upper part of the cloud.

The top of the visible cloud represents the maximum height of the radioactivity soon after the stabilization of the nuclear cloud. This reported cloud top and radius plotted against total energy release is given in Fig. V-1 for a surface or near-surface explosion.[11] The uncertainty expressed in the cloud top information results from the expected

Unclassified
ORNL-LR-DWG 79548

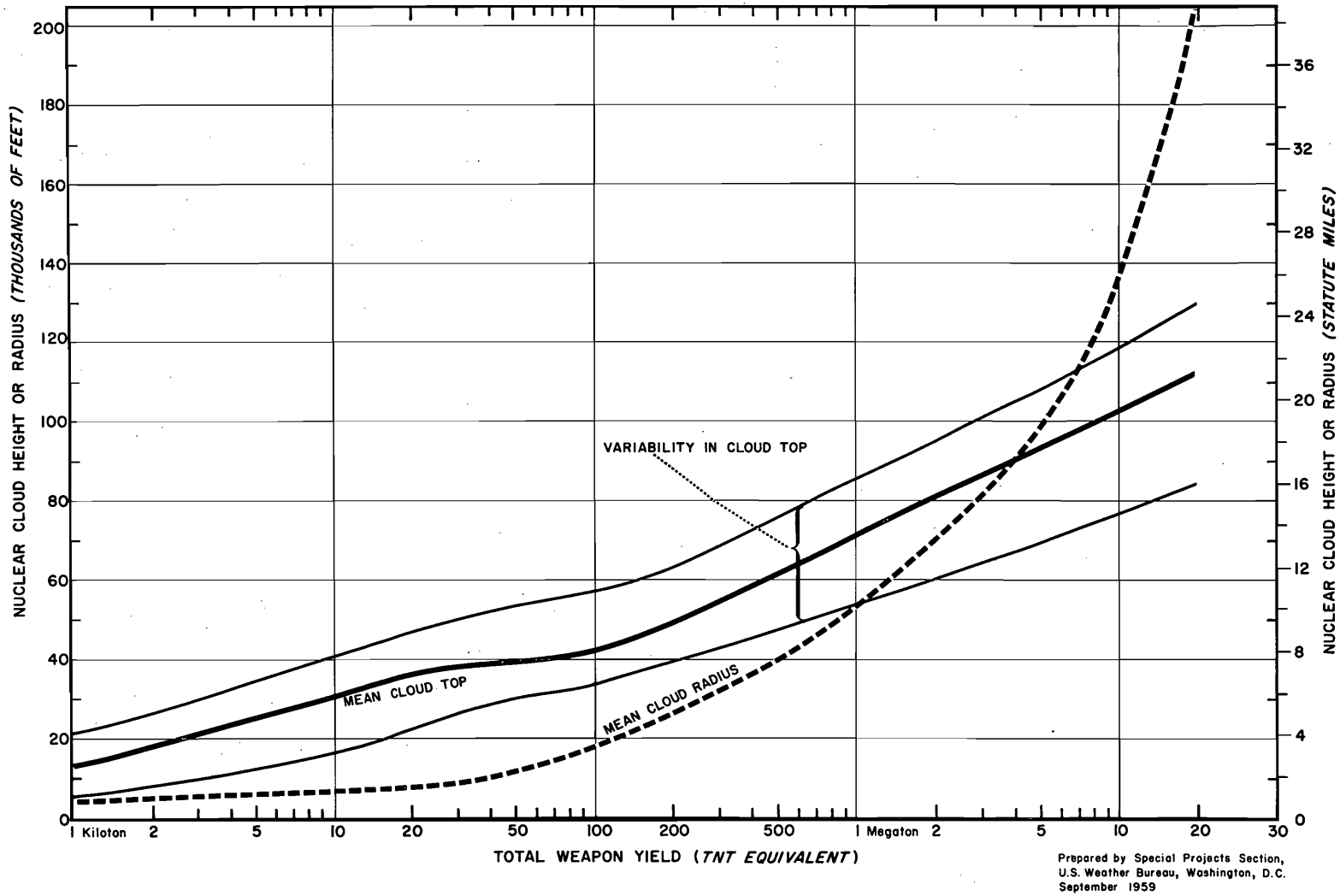

Fig. V-1. The Tops and Radii of Stabilized Nuclear Clouds as a Function of Total Energy for Detonations at or Near the Earth's Surface.

variation in cloud rise as a result of different weather conditions for weapons of the same total force and from the large discrepancies in cloud top measurements by different techniques. The cloud radius curve is on even less firm ground, although no range of uncertainty is assigned to it. This is because fewer measurements have been made of the cloud radius, and because the cloud continues to grow laterally after it ceases to rise. The radius given in the figure applies to the time that the cloud stops rising or about 10 min after the explosion. The curve of cloud top versus total energy yield levels off at a height of about 35,000 ft, which is the altitude of the tropopause over temperate latitudes. The tropopause is the top of the thermally unstable troposphere or base of the thermally stable stratosphere. The thermal stability above the tropopause acts as a barrier to the rise of the buoyant cloud and more energy is needed to move through it.

Quantitative Estimates of Production and Initial Distribution

Announced Nuclear Tests. The U.S., U.K., and French governments have announced 12 regions in which their own or Soviet nuclear tests have taken place. Of these, significant stratospheric injections of fission products took place in four: Christmas Island by the U.S. and U.K., the Marshall Islands and Johnston Island by the U.S., and Novaya Zemlya by the Soviet Union. The U.S. Atomic Energy Commission press release on the amount of fission products added to the atmosphere by nuclear testing has combined that from the U.S. and U.K., which, for meteorological purposes, might be labeled as an equatorial or tropical source, whereas that from the Soviet Novaya Zemlya proving grounds might be called a polar or

arctic source. The fission yields in two-year intervals for the U.S., U.K., and U.S.S.R. tests are listed in Table V-2.

Table V-2. FISSION YIELD ENERGY RELEASE BY COUNTRY AND PERIOD

Period	Fission Yield Energy Release (kilotons)	
	U.S. and U.K. (tropical)	U.S.S.R. (Arctic)
1945	60	60
1946	40	
1948	100	
1951	500	
1952–1954	37,500	500
1955	200	4,000
1956	9,000	
1957–1958	19,000	21,000
1959–1960[a]	0	0
1961[a]	Not available	25,000[b]
1962	Not available	Not available

[a]French tests were conducted in 1960 and 1961, one was announced as being 60 to 70 kilotons total yield, the remainder as small.

[b]Preliminary estimate.

In terms of numbers of nuclear tests, up to the end of 1962, at least 270 had been conducted by the U.S., of which approximately 19 were safety tests that involved the release of nuclear energy, 23 by the U.K., 5 by the French, and at least 150 by the Soviet Union. Many of these nuclear tests were entirely contained underground and involved no atmospheric contamination and several were conducted at very high altitudes.

Production Estimates. Estimates of fission yield for a given radionuclide (in Table V-1), together with the fission energy release (Table V-2) and the value 1.45×10^{26} fissions per megaton of fission energy, permit computation of the number of atoms of each fission product created by nuclear tests through 1961. This arithmetic provides 0.109 megacuries per megaton for Sr^{90}, although in most calculations, including those below, the number will be rounded to 0.1 megacuries of Sr^{90} per megatons of fission energy.

The number of C^{14} atoms per megaton of total yield had been given by the reviewer[13] as 2×10^{26} atoms per megaton of total yield, with an uncertainty of a factor of 2. This applies to the average type of air test conducted prior to 1959. Surface or underground explosions will produce smaller amounts of C^{14} for the same energy. The number of C^{14} atoms per megaton of total yield just quoted need not necessarily apply to the Soviet 1961 nuclear tests because of different fission-fusion ratios.

As already noted, atmospheric tritium from nuclear tests originates as both an unburned fuel and as a product. Except for an early estimate by Leipunskii[14] that a 10-megaton bomb produces 6.67×10^{7} curies of tritium, there are no literature values on the theoretical amounts of tritium introduced into the atmosphere by nuclear tests.

Partitioning of Debris Between Local, Tropospheric, and Stratospheric Fallout. In order to make a comparison between the theoretical amounts of fission products and induced activities with those observed, it is necessary to appreciate some of the shortcomings of the observational program and the nature of the difficulties. Radioactivity from atmospheric nuclear tests can be found in three environments: the earth's

surface, the oceans of the world, and the atmosphere. The deposited radioactivity may fall out quickly, as in local fallout, or slowly, as residual or world-wide fallout. The fraction of radioactivity deposited as local or close-in fallout is poorly known. This is because most of the pre-1959 close-in radioactivity fell over hard-to-measure oceanic waters. Further, the intense gradients of local fallout require many observation points. This is the context in which the value 30 megatons of fission energy, one-third of the total fission energy of 92 megatons up to 1959, quoted as local fallout must be viewed.[15] Thus, a prime source of uncertainty in a comparison between the observed and computed inventories of fission products lies in ignorance of the fraction of the fission products deposited locally downwind of a proving ground.

Nonlocal fallout may be deposited during the first few weeks or months after a test or may be delayed beyond this time. Probably most of that which is deposited in weeks or the first months after a test has originated from the troposphere, since, as will be described in Part II, the stratosphere exchanges air with the troposphere more slowly than the rate of particle removal from the troposphere. The debris remaining in the troposphere falls out in a band around the globe that is more concentrated than the fallout from stratospheric origins. In general, it is on this account that fallout which deposits within a few weeks following a nuclear explosion may not be measured as well as that which is spread more widely over the globe. All nuclear clouds from explosions with total energy releases of about 100 kilotons or less[11] detonated at or near the surface remain within the troposphere. This category includes virtually all the atmospheric nuclear tests held at the Nevada proving grounds and totals

about 1 megaton of fission energy. In addition, a very uncertain fraction of the debris from powerful nuclear explosions remains in the troposphere. Up to the time of the 1958 moratorium on nuclear tests, the total amount of radioactivity stabilized in the troposphere probably did not exceed that derived from about 2 megatons of fission energy. The radioactivity in the troposphere thus represents a very small portion of the total 92 megatons created or the 62 megatons thought to remain airborne after local fallout ceased.

Observed Fallout Inventories

Sr^{90} Inventory Before the Soviet 1961 Tests. Of all the fission products, Sr^{90} is most readily inventoried because it is long-lived and because many observations have been made for health physics purposes. The inventory calculation derives from two kinds of measurements; first, air concentration of Sr^{90} from which the atmospheric inventory can be computed and, second, deposited radioactivity of Sr^{90} from which the total fallout may be estimated.

Air measurements are made at ground level using conventional blower-filter devices; at upper levels, filtering with B-57 aircraft to about 50,000 ft, U-2 aircraft to about 70,000 ft, and ballon platforms to about 100,000 ft is used. Upper air radioactivity concentrations useful for inventory calculations are obtained primarily by the U.S. in the North and South American regions, it being assumed that the zonal nature of the air-flow will bring air from other meridians to the flight lines so that it is possible to trade sampling times for sampling points around a circle of latitude. A meridional cross section from which an estimate of the

atmospheric Sr^{90} burden can be computed is presented in Fig. V-2. Isolines of Sr^{90} concentration are based on the observed data and, to a lesser extent, on meteorological considerations. The inventory is probably correct to 50% or better.

The deposited radioactivity can be measured from soil samples. A map[16] of the global distribution of world-wide (omitting local) fallout is presented in Fig. V-3. The number of sampling points falls far short of that needed for a reliable integration of the ground-level deposition, but the most important blank areas lie behind the Iron Curtain or over the oceans. Extrapolation from nearby sampling points based on precipitation records permits an estimate of fallout in missing areas; that is, the amount of deposition roughly parallels the amount of precipitation in the same zone. Recent evidence suggests that fallout over the ocean exceeds that which would be expected from land extrapolation.[17] This may be due either to faulty precipitation estimates, since the measurement of rainfall over the ocean is very difficult, or to additional removal mechanisms over large water bodies. If deposition amounts are desired for times other than those for which soil sampling has been performed, the additional fallout can be obtained from the rate of deposition in pots or ion-exchange columns. These are incremental collectors of rainfall and settling dust. A global analysis of the monthly, quarterly, or annual amounts of deposition permits an analysis of the fallout over a given interval of time.

The approximate Sr^{90} contents of different parts of the atmosphere and on the earth's surface are listed in Table V-3. The total fallout may be compared with that computed from the information described above

Unclassified
ORNL-LR-DWG 79549

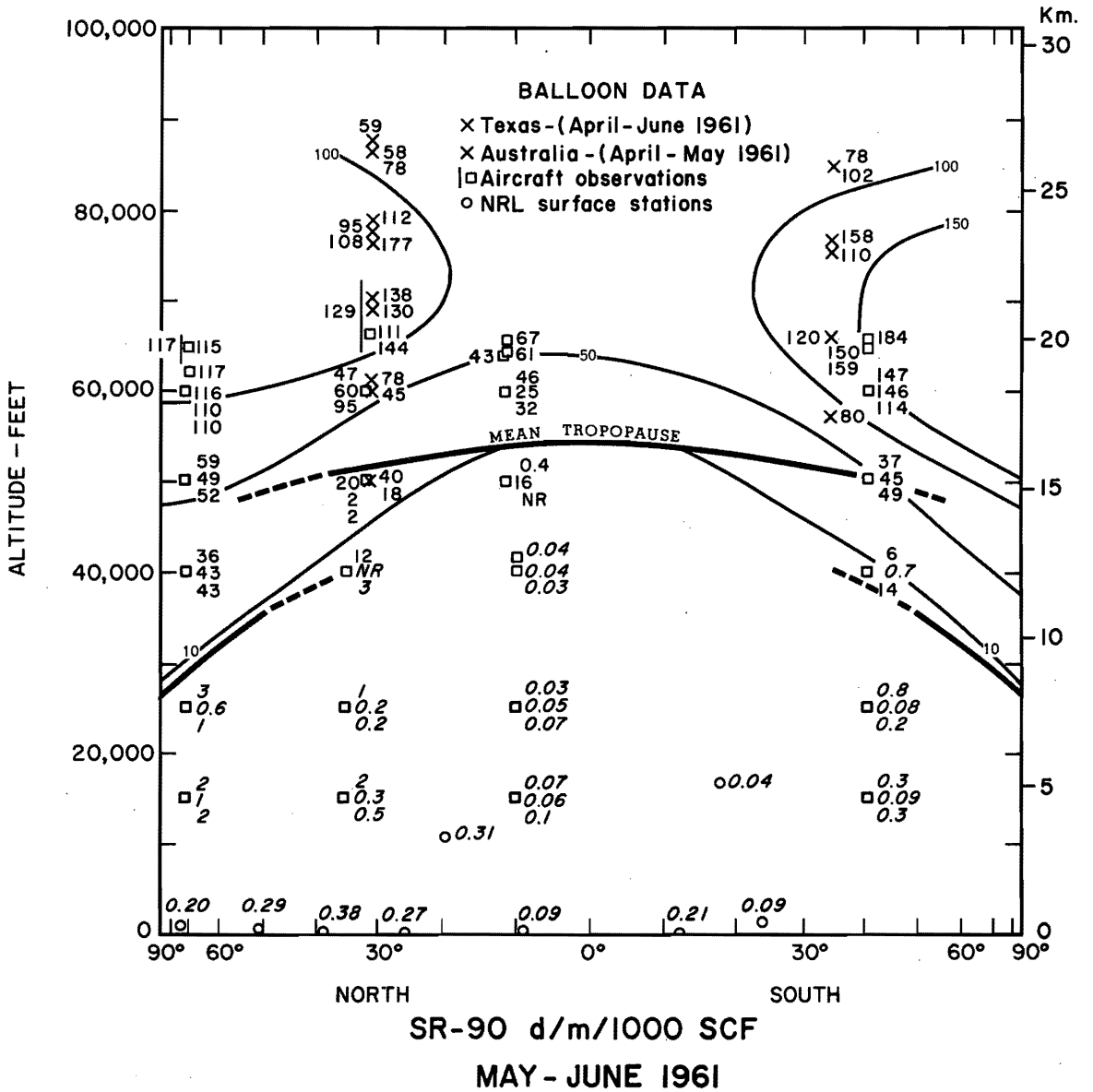

Fig. V-2. A Latitude-Altitude Cross Section of the Atmosphere Showing Measured Concentrations and Estimated Isolines of Concentrations of Sr^{90} on May 1961.

Unclassified
ORNL-LR-DWG 79550

AVERAGE SR-90 IN 1960 SOILS

[MC/MI 2]

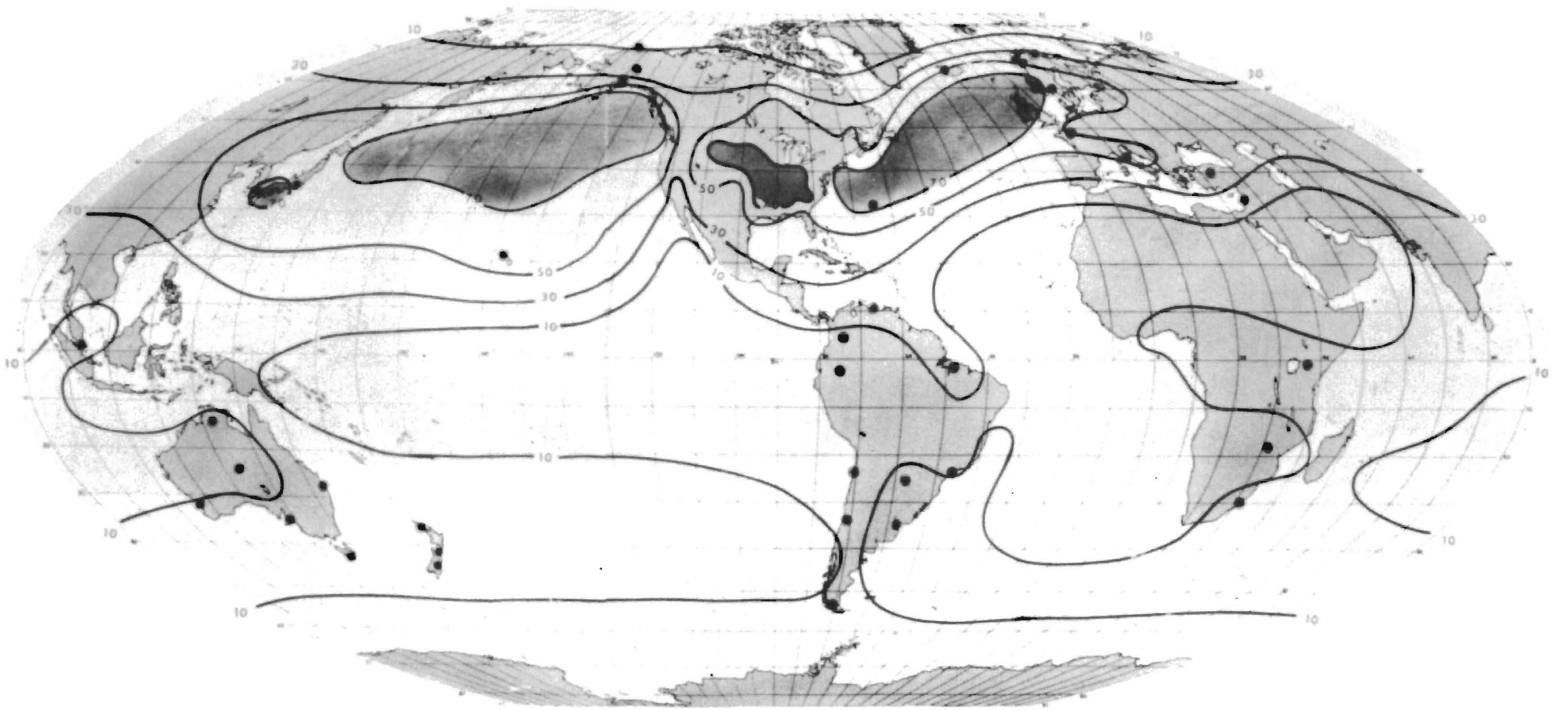

• SAMPLING SITE

59 US and 27 Canadian sites not indicated

Fig. V-3. Deposited Sr^{90} on the Earth's Surface as of Mid-1960. Isolines of equal deposition are based on observed values and average annual precipitation.

Table V-3. Sr^{90} INVENTORY, MAY 1961

Location	Inventory (megacuries)
Northern hemisphere, stratosphere	0.45
Southern hemisphere, stratosphere	0.52
World troposphere	0.03
Total atmosphere	1.00
Deposited on ground	4.2
Total	5.2

(the fission energy and the fission yield for Sr^{90}). This comparison appears in Table V-4 for three fiducial dates. The results show fortuitously good agreement, considering the uncertainties.

Carbon-14. An inventory of C^{14} can also be found, in part, because of numerous measurements made at the earth's surface and by ballons. The atmospheric content has been reported by Hagemann et al. as 25×10^{27} C^{14} atoms as of the end of 1958. This included about 16×10^{27} C^{14} atoms measured in the atmosphere on July 1957 and about 9×10^{27} C^{14} atoms estimated to have been added to the atmosphere subsequent to that date and up to the 1958 test moratorium. This number, however, does not represent the total inventory of C^{14} created by nuclear tests. While local fallout of C^{14} may be smaller than the fallout of fission products and world-wide fallout of C^{14} is essentially nil, the C^{14} marked CO_2 molecules are absorbed by the oceans. If the residence time of a CO_2 molecule in the atmosphere before entering the oceans exceeds 5 years, the oceanic content of bomb-produced C^{14} is small compared with the atmospheric inventory as of 1962.

Table V-4. COMPARISON OF Sr^{90} INVENTORY FOR THREE DATES

	Inventory (megacuries)		
	May 1960	November 1960	May 1961
Observed world-wide distribution	5.3	5.3	5.2
Available for world-wide deposition[a]	5.5	5.4	5.3

[a]Based on 9.2 less 3.0 (?) megacuries of local fallout and radioactive decay.

The total nuclear yield of tests by all nations up to 1959 was 173 megatons. Multiplication by the reviewer's estimate[13] of 2×10^{26} C^{14} atoms per megaton of total energy provides about 35×10^{27} C^{14} atoms. This should exceed that observed in the atmosphere both because some of the $C^{14}O_2$ has entered the oceans and because many tests were conducted at or near the earth's surface. It is found that the observed atmospheric content agrees reasonably well with that computed from the total yield and the expected C^{14} production per megaton.

Information on tritium inventory is lacking. Aside from Leipunskii's early estimate, no theoretical evaluation appears in the literature. Further, observed inventories are unavailable because of the paucity of stratospheric tritium measurements[18,19] and the fact that a large fraction of the tritium is in the earth's oceans.

DOSIMETRY AND EXPOSURES IN NUCLEAR ACCIDENTS

Since the previous reviews of this subject,[20,21] there have been several nuclear accidents. Although in no case has the dosimetry equipment been sufficient, it is noteworthy that the general level of preparedness has been considerably higher than in earlier accidents. In the SL-1 accident,[22,23] most of the dosimetry devices were rendered useless because of the explosive nature of the excursion and the gross levels of contamination. For these reasons, the SL-1 accident was unique, but it caused many organizations to review thoroughly their instrument installations and install detectors that would be readily recoverable.

The major emphasis at several large nuclear installations has been on the development of a neutron dosimetry system more economical than the "Hurst" system used at ORNL.[24,25] In general, these developments have been of two types: (1) modifications of the Hurst threshold detector units and (2) combinations of thermal-neutron detectors inside moderating mediums. Suggested modifications of the Hurst threshold detector system include replacement of Pu^{239} in a B^{10} shield with U^{235} in a cadmium shield and the use of other foils; for example, copper, indium, and manganese. The fission cross section of U^{235} decreases with increasing neutron energy[26] from about 30 barns at just above the cadmium cutoff energy to approximately 1 barn in the energy region in which the peak population of fission neutrons is most likely to occur. Consequently, the detector cannot yield reliable information concerning the total fast-neutron flux. The cross sections of the other foils mentioned above are similarly not well suited to the measurement of flux, except for thermal or slow neutrons. For example, the cross section of the 4.5-hr isomer

of indium increases slowly above the threshold energy up to 2.6 Mev and then decreases;[26] thus it cannot give reliable data for all neutron spectra.

There have been many reports concerning thermal-neutron detectors mounted inside moderators.[27-30] Such systems can be made to yield a response per unit flux that is relatively independent of neutron energy in the fast-neutron energy region; this is the basis for the Hanson-McKibben long counter.[31] Although such systems can be contrived to give a higher response per incident neutron at higher energy (e.g., by making the moderator thicker), the thermal-neutron flux distribution is an insensitive function of moderator thickness and energy of incident neutrons. Therefore the system is not suitable for measuring neutron spectra, but the response can be made to approximate a tissue dose curve for reasonably broad energy bands.

Several systems involving combinations of oils and moderators have been suggested and some are used in AEC installations. At present, none of the known systems provide sufficient spectral data to permit appropriate evaluation of the sodium activation of the blood. It must be kept in mind that the sodium activation of the blood can be used to estimate the dose only if the neutron spectrum is known. The ORNL threshold detector system yields, approximately, the minimum data needed. The size and orientation of the exposed person are also important parameters to be considered in the analysis of data on activation of the sodium in the blood.[32]

Perhaps there is no field in which a completely new approach is more badly needed. There are at least six major installations working

on problems of neutron dosimetry in nuclear accidents, and the major approaches, if not the only approaches, are based on "foil" activation in various shields and moderators. Gamma dosimetry in nuclear accidents is more readily accomplished. With appropriate thermal-neutron shielding, Li^6 capsules, metaphosphate glass, or one of several chemical systems can be used, and film can be employed with somewhat more elaborate methods.[24,33]

The highest known exposures, since early 1961, resulted from the criticality accident at the Hanford Recuplex facility. Of three persons having significant exposures, one was estimated to have received approximately 25 rad of fast neutrons and 65 roentgens of gamma radiation to the central portion of the body.[34] (J. A. Auxier)

SELECTION OF SAMPLES FOR AREA MONITORING

(Held over from Vol. 4, No. 2)

RUTHENIUM: A SPECIAL SAFETY PROBLEM

(Held over from Vol. 4, No. 2)

ESTIMATION OF MPC VALUES FOR MIXTURES OF RADIONUCLIDES

(Held over from Vol. 4, No. 3)

References

1. J. P. Friend, Ed., The High Altitude Sampling Program, Report DASA-1300, Defense Atomic Support Agency, 1961.

2. C. E. Adams, N. H. Farlow, and W. R. Schell, The Compositions, Structures and Origins of Radioactive Fall-Out Particles, Geochem. Cosmochim. Acta, 18: 42–56 (1960).

3. J. F. Loutit and R. S. Russell, Section 8: General Conclusions, pp. 126–135 in Progress in Nuclear Energy, Series VI, Vol. 3, J. F. Loutit and R. S. Russell, Eds., Pergamom Press, New York, 1961.

4. F. M. Bishop, T. E. F. Carr, G. E. Harrison, A. Sutton, and J. Wall, Section 9: The Distribution of Radioactivity in Rabbits Following Ingestion of Fission Products Collected from the Cloud from a Megaton Weapon, pp. 136–144 in Progress in Nuclear Energy, Series VI, Vol. 3, J. F. Loutit and R. S. Russell, Eds., Pergamom Press, New York, 1961.

5. H. M. Squire, B. F. Sansom, and L. J. Middleton, Section 10: The Metabolism by a Dairy Cow of Fission Products Obtained from Operation Grapple, pp. 145–151 in Progress in Nuclear Energy, Series VI, Vol. 3, J. F. Loutit and R. S. Russell, Eds., Pergamom Press, New York, 1961.

6. S. H. Small, On the Transportation and Deposition of Fallout Materials, Intern. Rapport F-399 (1960).

7. S. Stern, The Sampling of Radioactive Debris in the Stratosphere, American Meteorology Society, National Conference on Stratospheric Meteorology, Minneapolis, Minn., September 1959.

8. P. J. Drevinsky et al., Natural Aerosols and Nuclear Debris Studies Progress Report 1, U.S.A.F. Geophys. Res. Directorate, GRD, Res. Notes No. 8, AFCRC-TN-58-652 (1958).

9. N. A. Hallden et al., Radioactive Decay of Weapon Debris, pp. 194–199 in Fallout Program Quarterly Summary Report, USAEC Report HASL-117, 1961.

10. S. Glasstone, Ed., Effects of Nuclear Weapons, U.S. Government Printing Office, Washington, D.C., 1962.

11. L. R. Quenneville and K. M. Nagler, A Note on Nuclear Cloud Dimensions (unpublished 1959).

12. K. Stewart, The Condensation of a Vapour to an Assembly of Droplets or Particles, Trans. Faraday Soc., 52: 161–173 (1956).

13. L. Machta, The Production of C-14 in Nuclear Explosions, p. 2191 in Fallout from Nuclear Weapons Tests, Hearings Before the Special Subcommittee on Atomic Energy, 86th Congress of the U.S., May 5–8, 1959, Vol. 3, U.S. Government Printing Office, Washington, D.C., 1959.

14. O. I. Leipunskii, Radioactive Dangers from Continuous Atomic Bomb Testing, At. Energ. (USSR), 4: 63 (1958).

15. U.S. Congress Joint Committee on Atomic Energy, Fallout from Nuclear Weapons Tests, 86th Congress of the U.S., Summary Analysis of Hearings, May 5–8, 1959, U.S. Government Printing Office, Washington, D.C., 1959.

16. E. P. Hardy, Jr., et al., Strontium-90 on the Earth's Surface II, USAEC Report TID-17090, 1962.

17. V. T. Bowen and T. T. Sugihara, Strontium-90 in the "Mixed Layer" of the Atlantic Ocean, Nature, 186: 71–72 (1960).

18. F. Hagemann et al., Stratospheric Carbon-14, Carbon Dioxide and Tritium, Science, 130: 542–552 (1959).

19. F. Brown et al., Measurements of Water Vapour, Tritium and Carbon-14 Content of the Middle Stratosphere over Southern England, Tellus, 13: 407–416 (1961).

20. J. A. Auxier, Accident Dosimetry, Nucl. Safety, 2(3): 48–50 (March 1961).

21. R. H. Ritchie, Dosimetry Aspects of Nuclear Accidents, Nucl. Safety, 2(1): 71–75 (September 1960).

22. SL-1 Explosion Kills Three – Cause and Significance Still Unclear, Nucleonics, 19(2): 17–23 (February 1961).

23. John R. Horan and W. P. Gammill, The Health Physics Aspects of the SL-1 Accident, Health Physics, Vol. 9, in press.

24. G. S. Hurst and R. H. Ritchie, Radiation Accidents: Dosimetric Aspects of Neutron and Gamma-Ray Exposure, USAEC Report ORNL-2748, Part A, Second Issue, Oak Ridge National Laboratory, May 1961.

25. F. J. Davis, System for Dose Measurements in Radiation Incidents, Nucl. Safety, 2(1): 75–78 (September 1960).

26. D. J. Hughes and R. B. Schwartz, Neutron Cross Sections, USAEC Report BNL-325 (2nd ed.), Brookhaven National Laboratory, July 1958.

27. J. De Pangher, Double Moderator Neutron Dosimeter, Nucl. Instr. and Methods, 5: 61–74 (1959).

28. W. N. Hess and A. R. Smith, Measurement of Average Neutron Energies for (α,n) Neutron Sources, USAEC Report UCRL-8617, University of California Radiation Laboratories, 1959.

29. J. K. Basson, Symposium on Neutron Detection, Dosimetry, and Standardization, Harwell, United Kingdom, December 10–14, 1962, IAEA, proceedings to be published.

30. D. E. Hankins, A Method of Determining the Intermediate Energy Neutron Dose, USAEC Report IDO-16655, Phillips Petroleum Co., March 10, 1961.

31. A. O. Hanson and J. L. McKibben, A Neutron Detector Having Uniform Sensitivity from 10 Kev to 3 Mev, Phys. Rev., 72: 673–677 (1947).

32. F. W. Sanders and J. A. Auxier, Neutron Activation of Sodium in Anthropomorphous Phantoms, Health Phys., 8: 371–379 (1962).

33. C. H. Bernard, W. T. Thornton, and J. A. Auxier, Silver Metaphosphate Glass for X-Ray Measurements in Coexistent Neutron and γ-Radiation Fields, Health Phys., 4: 236–243 (1961).

34. C. C. Gamertsfelder et al., Dosimetry Investigation of the Recuplex Criticality Accident, Health Physics (Vol. 9, in press).

VI. CURRENT EVENTS

HOMOGENEOUS REACTOR EXPERIMENT NO. 2 OPERATING EXPERIENCE

(Held over from Vol. 4, No. 3; includes references 1 through 6.)

ACCIDENTS IN NUCLEAR ENERGY OPERATIONS

J. R. Buchanan L. J. King

Accidents that occur in nuclear energy operations are discussed in Nuclear Safety as information on such incidents becomes available because of their interest to those concerned with nuclear safety. This article reviews two unrelated incidents involving plutonium oxide that occurred in AEC facilities. The first involved accidental release of plutonium oxide powder at Mound Laboratory and the second, release of a solution containing plutonium oxide at Hanford. Neither injury nor exposure to personnel was severe in either incident.

Also included in this review is a chronological list of accidents involving nuclear equipment or activity release in nuclear energy operations for the period July 1, 1960 to November 30, 1962 (Table VI-1). The information in Table VI-1 was derived from AEC annual reports for 1961 and 1962.[7,8] Similar tabulations for earlier periods were reported previously.[9,10]

Commission contractor annual surveys show that of more than 95,000 employees monitored for radiation exposure in 1961, 99.9% received less than 5 rem within the year and 94.5% received less than 1 rem. Radiation exposures for the year are summarized in Table VI-2. Exposures are kept to a minimum consistent with the benefits to be derived, and they average well within the limits set for atomic energy contractor workers.

Accidental Plutonium Release at Mound Laboratory

On July 26, 1962, plutonium oxide powder was accidently discharged into the atmosphere in a room in the SM building at the Mound Laboratory,

Table VI-1. CHRONOLOGICAL LISTING OF ACCIDENTS IN NUCLEAR ENERGY OPERATIONS FOR THE PERIOD JULY 1, 1960 TO NOVEMBER 30, 1962

Date	Location	Installation Owner	Nature of Incident	Extent of Exposure
July 21, 1960	Mt. Vernon, N. Y.	Licensee	A glass ampule exploded and released 5 to 10 curies of tritium oxide; the laboratory was shut down and decontaminated within 48 hr	None
July 21, 1960	Burbank, Calif.	Licensee	95 mc of I^{131} was lost from a ruptured reaction vessel and subsequently released to the atmosphere; operations were subsequently moved to a glove box for better containment	Negligible
Aug. 1, 1960	Portsmouth, N. H.	Licensee	An employee was exposed to a 60-curie Ir^{192} source when it became lodged in a projection tube	One person received 3 rem
Aug. 1, 1960	San Diego, Calif.	Licensee	An employee was exposed to a 35-curie Co^{60} source	One person received 3.4 rem
Sept. 5, 1960	Compton, Calif.	Licensee	An employee was exposed because of poor practice during radiography	One person received 3.4 rem
Sept. 30, 1960	Waltham, Mass.	Licensee	30 curies of Kr^{85} was released to an unrestricted area because of loss of a reaction vessel seal	None
Oct. 5, 1960	Army Chemical Center, Md.	Licensee	An employee was exposed while attempting to repair a device containing a 330-curie Co^{60} source	One person received 3 rem
Oct. 18, 1960	Tulsa, Okla.	Licensee	An employee was exposed while attempting to retrieve a source after a steel object fell on the projection tube	One person received 2.5 rem whole body and 13 rem to hand
Nov. 4, 1960	Burbank, Calif.	Licensee	An employee was exposed while removing contaminated filters; procedures were revised to prevent a recurrence	One person received 3 rem
Nov. 7, 1960	Waltham, Mass.	Licensee	50 curies of H^3 was released to an unrestricted area when glass apparatus exploded in an exhausted hood; area was closed 1 week for decontamination	None
Nov. 16, 1960	Metone, Calif.	Licensee	Two employees were exposed when a 37-curie Co^{60} source in a radiography camera failed to return to its shield	Two persons received 3.8 rem to hands
Nov. 28, 1960	Palo Alto, Calif.	Licensee	16.9 curies of Kr^{85} was released to the atmosphere because of vacuum-gage malfunction	None

Table VI-1. (Continued)

Date	Location	Installation Owner	Nature of Incident	Extent of Exposure
Nov. 29, 1960 to March 10, 1961	Chicago, Ill.	Licensee	Several employees received excessive I^{131} deposition in thyroid during routine laboratory work; contamination in public areas and excessive radiation levels in unrestricted areas were noted; company moved to new laboratory and affected areas were decontaminated	Undetermined
Dec. 1, 1960	Camden, N. J.	Licensee	Two employees were exposed when a 13-curie Ir^{192} source fell from an unlocked radiography projector and was unnoticed	One person received 25 to 250 rem; the other under 25 rem
Dec. 8, 1960	New Brunswick, N. J.	Licensee	Six employees were exposed because of inadequate supervision, instructions, and facilities	6 persons each received 30 to 90 rem integrated dose to thyroid
Dec. 19–24, 1960	Burbank, Calif.	Licensee	An employee was exposed while encapsulating 10-curie Co^{60} sources; cause unknown	One person received 1.3 rem
Jan. 2–27, 1961	Oak Ridge National Laboratory	AEC	One employee received exposure to hands on at least two occasions while performing operations on irradiated fuel elements	One person received 1200 rad to fingers of left hand and 900 rad to fingers of right hand
Jan. 3, 1961[a]	Combustion Engineering, Inc., NRTS, Idaho	AEC	Three armed forces personnel were killed as a result of a nuclear excursion in the SL-1 reactor; nine members of emergency crews received overexposures	Three persons were killed and nine persons were overexposed; the maximum overexposures were 27 rem to each of two individuals
Jan. 17, 1961	Tonawanda, N. Y.	Licensee	2.4 curies of Kr^{85} was released to the atmosphere during transfer of material to shipping containers because of misoperation	Undetermined
Jan. 21, 1961	Milwaukee, Wis.	Licensee	An employee entered a radiation facility while a 26-curie Co^{60} source was exposed	One person received 6.5 rem
1st Quar. 1961	Boston, Mass.	Licensee	Two employees received excessive exposures to tritium; the cause was unknown	One person received 4 rem (calculated) and the other 3 rem (calculated)
Jan. 25, 1961[b]	Phillips Petroleum Company, NRTS, Idaho	AEC	A criticality incident occurred at a chemical processing plant when U^{235} solution surged from a geometrically safe container to an unsafe vessel	None

Table VI-1. (Continued)

Date	Location	Installation Owner	Nature of Incident	Extent of Exposure
Feb. 2, 1961	Olmsted, Pa.	Licensee	A leak-testing device malfunctioned and released 10.5 curies of Kr^{85} to a control room; area was evacuated	None
Feb. 6, 1961	Houston, Tex.	Licensee	90 millicuries of Cs^{137} was released during leak testing of a source; the laboratory was closed 24 hr for decontamination	None
Feb. 13, 1961	New York City	Licensee	An employee received exposures during patient setups for Co^{60} treatment	One person received 2-rad beta and 6-rem gamma
Feb. 20 to March 4, 1961	Havertown, Pa.	Licensee	An employee was exposed while doing radiography in close quarters; more careful control of exposure was instituted	One person received 8 rem
Feb. 23-24, 1961	Minneapolis, Minn.	Licensee	Three employees were exposed when a 4000-curie Co^{60} source fell out of unit because an access port was not properly closed during installation of unit	One person received 7 rem to head and 50 rem to knees; second person, 50 rem; and third person, 5 rem
May 5, 1961	Lawndale, Calif.	Licensee	Five employees were exposed to 221 curies of Kr^{85} accidentally released into a laboratory by improperly trained persons	Undetermined
May 11, 1961	Mound Laboratory	AEC	Pressure buildup in a closed caustic scrubber forced airborne radioactivity into a room and contaminated area	One employee received 2.05 times permissible body burden
June 9, 1961	Beacon, N. Y.	Licensee	A valve inadvertently left open allowed the release of 23.3 curies of H^3	Undetermined
July 10 to Aug. 27, 1961	Pittsburg, Pa.	Licensee	An employee was exposed while processing P^{37} and Sr^{85} and Sr^{89}; the cause could not be determined	One person received 16-rad beta
Aug. 9, 1961	Columbus, Ohio	Licensee	An employee was exposed while removing an irradiated sample from a reactor; exposure was due to human error in positioning the sample	One person received 13.2-rem gamma and 44.7-rem beta
Aug. 16, 1961	J. A. Jones Construction Co., Hanford, Wash.	AEC	Five employees received skin contamination while dismantling old laboratory equipment	Five persons received skin contamination
Aug. 30, 1961	San Diego, Calif.	Licensee	Two employees were exposed while unknowingly handling Cl^{38}	One person received 13-rem gamma and 160-rad beta to the hands; the other 2.6-rem gamma and 32-rad beta to the hands

Table VI-1. (Continued)

Date	Location	Installation Owner	Nature of Incident	Extent of Exposure
Sept. 15, 1961	Austin, Texas	Licensee	About 10 curies of H^3 was released to an unrestricted area when a helium cell exploded (because of metal fatigue) and damaged a tritium target	None
Oct. 2–24, 1961	E. I. du Pont de Nemours & Co., Savannah River	AEC	A series of flume failures occurred in the SRP reactor cooling-water effluent system	None
Oct. 20, 1961	Monsanto Chemical Co.	AEC	An employee received polonium contamination when a glass apparatus was dropped	One person received 1.4 times body burden of polonium
Oct. 30, 1961	Los Angeles, Calif.	Licensee	An employee was exposed to a 30-curies Ir^{192} source when a malfunction prevented its return to a shielded position; emergency instructions were revised to prevent a recurrence	One person received 5 rem
Nov. 5, 1961	Burlingaine, Calif.	Licensee	An employee was exposed to an 8-curie Ir^{192} source when he neglected to return the source to its shielded position before changing film	One person received 8 rem
Nov. 20, 1961	Indianapolis, Ind.	Licensee	A radiologist ingested up to 2 millicuries of I^{131} and possibly some Co^{60}; although it was concluded that the employee suffered no permanent damage, it should be noted that the exposure was over 10 times that recommended at the site boundary of a reactor during an incident	One person received 4000–6000 rad to the thyroid
Dec. 12, 1961[c]	Phillips Petroleum Co., NRTS, Idaho	AEC	The ETR manually scrammed following a fission break caused by restriction of primary coolant flow resulting from remnants of a transparent acrylic resin sight box	None
Dec. 19, 1961	General Electric Co., Hanford, Wash.	AEC	An employee received superficial plutonium-contaminated puncture wound on a finger when a wire pierced his glove while he was wiring inside a hood	Undetermined
Jan. 2 to Feb. 28, 1962	Columbus, Ohio	Licensee	An employee received exposure to his hands while routinely handling Sr^{90} and Cs^{131} sealed sources; leaded neoprene gloves were provided to prevent a recurrence	One person received 88 rem to left hand and 55 rem to right hand

Table VI-1. (Continued)

Date	Location	Installation Owner	Nature of Incident	Extent of Exposure
Jan. 23, 1962	University, Ala.	Licensee	Extensive contamination in a physics building and in homes, automobiles, and personal effects of certain individuals occurred because of a leaking 122-millicurie Po^{210} source; improvements were made in leak-testing procedures and surveys	Undetermined
Feb. 15, 1962	E. I. du Pont de Nemours & Co., Savannah River	AEC	Particles released while purging a stack-gas sampling line required washing of 163 vehicles for decontamination	None
March 24, 1962	Norfolk, Va.	Licensee	Two employees were exposed to a 33-curie Ir^{192} source when it was unknowingly left in the unshielded position during a test; steps were taken to provide surveys in the future	One person received 16-rem whole body and 6.5 rem to the hands; the other, 4.6-rem whole body
April 7, 1962[d]	General Electric Co., Hanford, Wash.	AEC	Three employees were overexposed in a criticality incident with plutonium solution	One person received 100–125 rem; a second, 40–65 rem; and a third, 12–30 rem
April 18, 1962	Cambridge, Mass.	Licensee	A student working with fission products handled the material with his hands rather than tongs; new procedures were established to prevent a recurrence	One person received 915 rem to left hand
April 27, 1962	Corpus Christi, Texas	Licensee	An employee was exposed to an unshielded irridium source; the specific cause was not ascertained	One person received 4.2 rem
May 11, 1962	Syracuse, N. Y.	Licensee	About 25 curies of Kr^{85} was released to the atmosphere when an operator failed to detect that an O-ring seal had been broken prior to manipulating the equipment; new equipment was placed in service to prevent a recurrence	Undetermined
May 29, 1962	General Electric Co., Hanford, Wash.	AEC	An employee received a finger cut and contamination of the wound while doing cleanup operations	On person had finger tissues contaminated to 70,000 dis/min; less than 10% of maximum body burden was estimated to remain at wound site

Table VI-1. (Continued)

Date	Location	Installation Owner	Nature of Incident	Extent of Exposure
June 2, 1962	General Electric Co., Hanford, Wash.	AEC	An employee received a finger puncture and contamination of the wound while doing maintenance work in a hood	One person had finger tissues contaminated to 250,000 dis/min; an estimated 10–20% of maximum body burden remained at wound site
July 12, 1962	Sacramento, Calif.	Licensee	An employee was exposed to a 30-curie Ir^{192} source when a pneumatic type of camera malfunctioned; the camera was repaired to prevent a recurrence	One person received 172 rem to the hands
July 24, 1962	Puerto Rico Nuclear Center	AEC	Seven employees were exposed when a crane operator thought he had a clear signal and moved irradiated fuel elements against an aluminum window separating the exposure room from the reactor pool	Seven persons received doses as follows: 80, 55, 20, 15, 7, 3, and 2 to 3 rem
July 26, 1962[e]	Monsanto Chemical Co.	AEC	A calorimeter can, when opened, accidentally discharged plutonium oxide powder into a room and into several employees	Six persons received significant alpha contamination
Aug. 13–24, 1962	Philadelphia, Pa.	Licensee	An employee was exposed to a multicurie Ir^{192} source during routine radiography; the specific cause was undetermined	One person received 5.9 rem
Sept. 6, 1962	Milwaukee, Wis.	Licensee	An employee entered a room without knowledge that a 24-curie Co^{60} source was unshielded; steps were taken to provide for radiation surveys and warning devices in the future to prevent a recurrence	One person received 1200 rem to top of head and 1.8 rem to whole body
Sept. 11, 1962	Chicago, Ill.	Licensee	An employee was overexposed while performing maintenance on a leaking drain line	One person received 5.6 rem
Oct. 7, 1962[f]	Martin Co., McMurdo Sound, Antarctica	AEC	A hydrogen fire at the PM-3A reactor caused light damage to the system	None
Nov. 11, 1962	Phillips Petroleum Co., NRTS, Idaho	AEC	Personnel were temporarily evacuated from the MTR because of radioactivity release from a fuel element damaged by impeded coolant flow	None

[a]Reviewed in Nucl. Safety, 3(3): 64–74 (March 1962) and 4(3): __ (March 1963).

[b]Reviewed in Nucl. Safety, 3(2): 71–73 (December 1961).

[c]Reviewed in Nucl. Safety, 3(4): 93–95 (June 1962).

[d]Reviewed in this issue of Nucl. Safety, see p. .

[e]Reviewed in this issue of Nucl. Safety, see p. .

[f]Reviewed in Nucl. Safety, 4(3): (March 1963).

Table VI-2. EXPOSURE OF AEC CONTRACTOR PERSONNEL TO PENETRATING RADIATION AS SUMMARIZED FOR CALENDAR YEAR 1961

Range of Annual Total Exposure (rem)	Number of Employees Exposed
0–1	90,651
1–5	5,174
5–10	40
10–15	2
Above 15	8[a]

[a]Result of emergency activities in the accident involving the SL-1 reactor on Jan. 3, 1961.

Miamisburg, Ohio, during the opening of a can that had been removed from a calorimeter. High-level surface and air-borne alpha contamination in the room, contamination of adjacent areas, and contamination and possible internal exposure of personnel resulted. The following review of the incident is based on the report[11] of the investigating committee.

The batch of plutonium oxide involved in this accident was processed in the same way as previous batches were, with the exception of packaging. Samples of previous batches for calorimetry assay had been handled in O-ring-sealed containers with a free volume great enough to reduce the probability that gas pressure would ever become noticeable. Previously, all cans were opened in a dry box to reduce the possibility of harmful consequences if the active material were released when the containers were opened.

The altered method of packaging resulted from changing to the use of calorimeters that required smaller outer-diameter containers for the plutonium oxide powder, and although a specially designed can had been

ordered, it was not on hand for use with this batch of material. Aluminum containers that were available from other operations were used as described below.

The plutonium oxide was prepared by allowing an oxalate to self-calcine overnight. The reaction is a decomposition of the oxalate to the oxide with the liberation of carbon monoxide and carbon dioxide. The oxalate weighed about 30 g and when distributed into four containers filled each almost to the top. The tops of these aluminum containers had circular Delta seals machined in them so that when they were assembled, with six machine screws, a metal-to-metal seal resulted. Two of the containers were then stacked head to head, wrapped in aluminum foil, and wiped with a slightly oily rag. In order to reduce the over-all height of the two stacked containers sufficiently to fit inside a sealed No. 3 tin can, the six Allen-head machine screws normally used to hold the lid on each of the small containers were replaced sequentially with mild-steel round-head machine screws. The lid was not removed during the replacement. To further reduce the over-all height, the heads of the machine screws were partially ground off. The tin can and lid were received unassembled, and the lid was joined to the can in a sealer, with the lid being rolled on to effect a hermetic seal. The two sealed No. 3 tin cans, each containing two of the smaller aluminum containers wrapped in foil, were then placed in a larger can which was inserted into the calorimeter. This can was 4 in. in diameter and 8 3/4 in. high. The annular space between the tin cans and the inside of the larger can was filled with copper-plated lead shot. The clearance between the top tin can and the cover of the outermost can was about 1/4 in.

The outermost can was checked in the assembly room for contamination and then taken to another room where it was placed in a calorimeter and allowed to remain overnight. The following morning, two chemists, accompanied by a health physics surveyor with a direct-reading alpha-survey meter, attempted to open the can after they removed it from the calorimeter. The lid, which was held on by a bayonet lock, could not be removed by hand, so a screw driver was used to align it for removal. Just as the screw driver was withdrawn, the lid blew off to a height of about 2 ft. It was observed at this time that the lid of the top No. 3 tin can was ruptured and the aluminum-foil wrapping was torn.

When the lid blew off, the three persons involved with the unloading were about 2 ft away; a third chemist, passing immediately behind them was 4 ft away; and a sheet metal worker, standing on a dry box while working in the overhead service area, was 12 ft away. All those involved were wearing the required protective white clothing; one chemist and the sheet metal worker were wearing respirators. The group handling the can announced an evacuation, and within seconds the room was vacated. All remained just outside the door in the corridor.

Three additional health physics surveyors responded to a call for monitoring assistance. The meters used to survey the clothing of the people involved in the accident went offscale at 2×10^6 counts/min. The individuals involved were instructed to change clothes and to shower, and the health physics supervisor telephoned Guard Headquarters to announce an emergency in the building. Shortly thereafter (within about 5 min after the can was removed from the calorimeter), the building was emptied.

Nose-wipe counts were made on all those who were in the vicinity of the accident, and six were found to have counts higher than 2000 dis/min. These included the chemist who aligned the lid, the health physics surveyor who was monitoring the lid-removal procedure, and the chemist who was passing nearby. Two health physics surveyors and a decontamination technician also inhaled some plutonium, evidently while monitoring and assisting the group that had been involved in the accident. These latter three were passing nearby when the accident occurred. They went to the aid of the people who were involved in the accident without hesitating to get respirators for themselves. Nose-wipe counts for these six people ranged from about 2×10^4 to 5×10^5 dis/min. The chemist and sheet metal worker who were wearing respirators at the time of the accident did not have significant nose-wipe counts.

The six individuals who had significant counts were transferred to the Medical Department for treatment[12] with trisodium diethylenetriaminepentaacetic acid (DTPA) to accelerate elimination of possible internally deposited plutonium from the body. It is not yet possible to determine from bioassay specimens whether the maximum permissible accumulated radiation dose was exceeded in any of the six people.* Measurements made in the In Vivo Radiation Monitor (whole-body counter) at the Oak Ridge National Laboratory showed no detectable lung burden of plutonium; however, the minimum lung deposit that could have been detected by the in vivo measurement is estimated to have been six times the maximum permissible lung burden.[13]

---

*This statement should be brought up to date before being published.

Surface alpha contamination in the room in which the accident occurred averaged 2×10^6 dis/min per 60 cm^2, and a 3-liter air sample indicated 4×10^6 dis/min. Alpha activity was tracked into the corridor and into four nearby rooms. Decontamination of these nearby areas was complete by July 30, 1962, and the room in which the accident happened was decontaminated sufficiently to permit resumption of operations on August 3, 1962. Costs directly attributable to the accident were estimated at $4400. No cost could be assigned to the shutdown of the facility during decontamination.

The accident apparently resulted from a series of seemingly slight changes in a procedure that had been used many times without difficulty. The danger of pressure buildup in the equipment had been so successfully overcome by the original design and operating procedure, including opening the containers in a dry box, that the people using the equipment were lulled into forgetting that danger existed.

This incident emphasizes the need for a written safety review of all procedures and equipment for handling potentially dangerous quantities of radioactive materials. When a change in equipment or procedure is proposed, it is necessary to refer to the safety review and, if possible, consult the original reviewers to be sure that the possible consequences of the proposed change are fully evaluated. A decision that is based on the intuition of even the most experienced and informed people does not constitute a satisfactory analysis of a procedure for handling radioactive materials.

Plutonium Capsule Rupture at Hanford

A quartz tube that originally contained 5 ml of a solution of about 100 mg of plutonium in hydrochloric acid burst with some violence during attempts to open it. The tube surprisingly had remained pressurized even though about one-half the solution had leaked from it during the processing step that immediately preceded the accident. The incident is described in a safety newsletter published by the Division of Operational Safety, USAEC.[14] The employee who was attempting to open the tube received superficial scratches on both hands and a small puncture wound on his right hand; also, a small laboratory area became contaminated.

The accident occurred in an open-front dry box. The front of the box was partly closed by a Lucite window into which three gloveports had been cut. The operation being carried out was part of the sealed-tube process for dissolving refractory materials of several types that could not be dissolved by the use of other techniques. The sealed-tube method is a well-established one, with which much experience has been gained without accident. The method consists in sealing the sample, in this case plutonium oxide, with hydrochloric acid containing three drops of perchloric acid in a heavy-walled quartz tube and then heating the tube at 325°C to effect solution. The tube is enclosed during heating in a thick steel shell containing a compensating pressure of carbon dioxide, and after cooling to room temperature, the tube is removed from the shell. At this point, the tube is normally chilled in dry ice to reduce the slight internal pressure, marked with a file, and then broken open in the dry box. Normal protective clothing (shoe covers, smocks, and rubber gloves) was sufficient in all previous experience with this operation.

In this case, upon opening the steel shell, visual inspection showed that the tube was intact but that about one-half the solution had leaked into the shell. The leakage obviously was due to a previously unobserved pinhole in the tube. The employee assumed that the small hole in the tube would prevent its holding the normally small internal pressure and therefore did not chill the tube before attempting to break it open. This assumption, which seemed reasonable at the time, proved to be highly erroneous.

It is now obvious that the internal pressure in the tube far exceeded that normally present, a condition probably caused by flow of carbon dioxide into the tube from the surrounding shell, especially during the cooling period, and then clogging of the very fine hole, which prevented escape of the gas. The tube burst with sufficient force to shatter most of the quartz into small pieces, several of which penetrated the rubber gloves the employee was wearing and causing the one puncture wound and several scratches. The plutonium solution and broken quartz were sprayed about the dry box, and some of the solution spray passed through the open glove-ports in the Lucite window and contaminated an area of about 30 ft^2. The employee's smock, but not his other clothing, was contaminated. Removal of the smock and the washing of his hands caused the contamination of one cuff of his shirt.

Urine and blood samples and a nose-wipe count were negative, as were the results from probing with a Plutonium Wound Counter. The employee returned to work and was assigned duties in laboratories not containing plutonium until his minor wounds healed. The working area was easily decontaminated.

The sealed-tube process is being revised to improve the technique of sealing the quartz tubes and to make safer the handling of the tubes after removal from the steel shell.* The following recommendations are among those to be* incorporated into the revised process.[14]

1. "Upon detecting any evidence that a plutonium-containing tube has leaked, the cap should be resealed on the steel shell, and the entire unit disposed of in the manner prescribed for contaminated materials.

2. "Without exception, the contents of each tube will be frozen in liquid nitrogen before removal from the shell. [Preliminary tests of this freezing operation showed that the addition of liquid nitrogen to the steel freezes the hydrochloric acid solution in the tube within 2 min.]

3. "The tube, with contents frozen, will be opened as soon as practical after removal from the steel shell.

4. "The person opening the tube should wear leather gloves or other heavy gloves over surgeon's rubber gloves, and wrap the tube in toweling during the opening operation. Use of a gloves box [closed] is being considered also for this operation."

---

*These statements should be brought up to date before being published.

VAN DE GRAAFF ELECTRON-BEAM EXPOSURE AT SANDIA CORPORATION

W. D. Burnett* H. L. Rarrick**
G. E. Tucker***

On November 8, 1960, a staff member and a staff associate in the Physical Sciences Research Department at the Sandia Corporation were accidentally exposed to an unpredicted electron beam resulting from a Van de Graaff accelerator operating in a "self-charging" condition. At the time of the incident, the Van de Graaff was "self-charging" the accelerating potential voltage. The belt charge circuit, the normal source of electrons for the high-voltage potential, was turned off, and the beam current, which introduces electrons to be accelerated, was also turned off.

The beam current normally consists of electrons introduced from a heated tungsten filament located at the head of the accelerator tube. Inside the accelerator tube, the high voltage is distributed between a series of "equa-potential" rings about 3/4 in. apart. These high-voltage gradients accelerate the electrons down the accelerator tube into the drift tube, through a thin aluminum window, and on as the ionizing beam, as shown in Fig. VI-1.

Previous measurements had shown that with the machine in the condition described above there was no detectable ionizing radiation from the

---

*Mr. Burnett joined Sandia Corporation's Health Physics Section as a staff member in 1960. He has M.A. degrees in physics and radiation biology, and he participated in the AEC Fellowship Program.

**Mr. Rarrick, Supervisor of the Health Physics Section, joined the Sandia Corporation's staff in 1949. He has a B.A. degree in mathematics and physics and has done graduate work in these fields.

***Mr. Tucker joined the Sandia staff in 1955 and has been a member of the Health Physics Section since 1958. He also has a B.A. degree in mathematics and physics and has done graduate work in these fields.

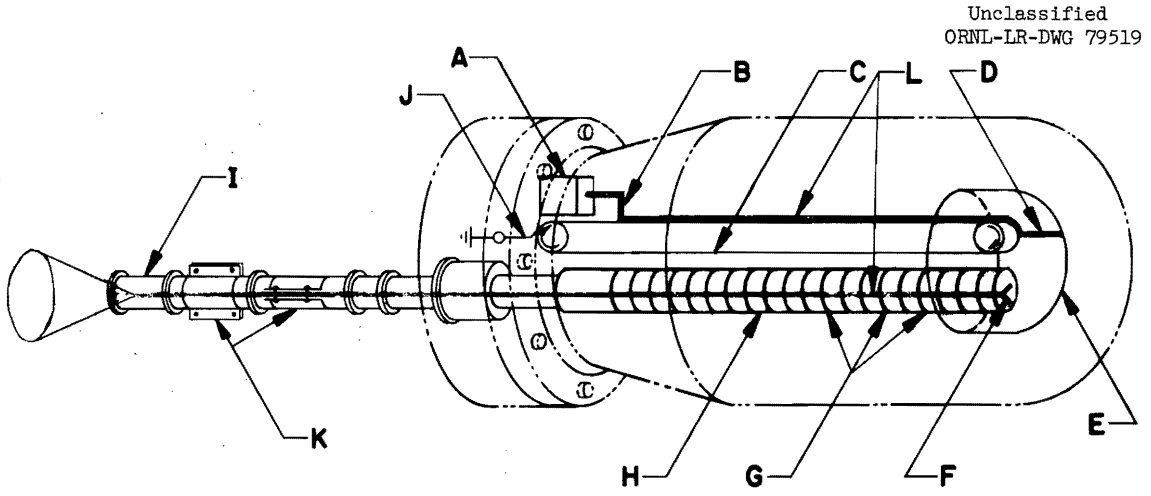

A. CHARGING CIRCUIT
B. UP CHARGE SCREEN
C. BELT
D. CHARGE SCREEN
E. HIGH VOLTAGE TERMINAL
F. FILAMENT
G. EQUA-POTENTIAL RINGS
H. ACCELERATOR TUBE
I. DRIFT TUBE
J. DOWN CHARGE SCREEN
K. SCANNING COILS
L. ELECTRON PATH

Fig. VI-1. Sandia Corporation's Van de Graaff Electron Accelerator.

drift tube; however, the accelerator had not been able to operate at its rated capacity, that is, a 2.0-Mev potential and a 250-μamp current, and basic adjustments were made to the system one day prior to the incident to improve the performance of the machine. In particular, the collector belt had been tightened to a 200-lb tension, and the charge and uncharge screens had been adjusted to lightly contact the belt. The downcharge collector screen was not adjusted. These changes caused the machine to attain its rated output, but they also increased the self-charging potential of the accelerator from a previous maximum of 0.3 Mev to about 1.7 Mev.

Self-charging is due to electrons produced by friction between the screens and the belt. The accelerating potential, resulting from the increase in the self-charge to 1.7 Mev, caused a corona when distributed across the equa-potential rings and, hence, production of a small number of ions. These ions were then accelerated by the Van de Graaff as if they were the normal supply of electrons from the tungsten filament. The total beam current attributed to the acceleration of these ions increased with time as shown in curve A of Fig. VI-2.

In order to reduce the self-charging beam to safe levels, the downcharge collector screen was subsequently adjusted so that the self-charging potential was reduced to less than 0.3 Mev. This reduced the beam current to below 10^{-9} amp.

A re-enactment of the incident allowed time and motion studies, as well as beam-current measurements, to be made, the latter with a Faraday cage. The staff member's exposure began 15 sec after the belt was turned on (but not the charge current or the beam current) and lasted for 2 min 15 sec while he was setting up an experiment in front of the drift tube.

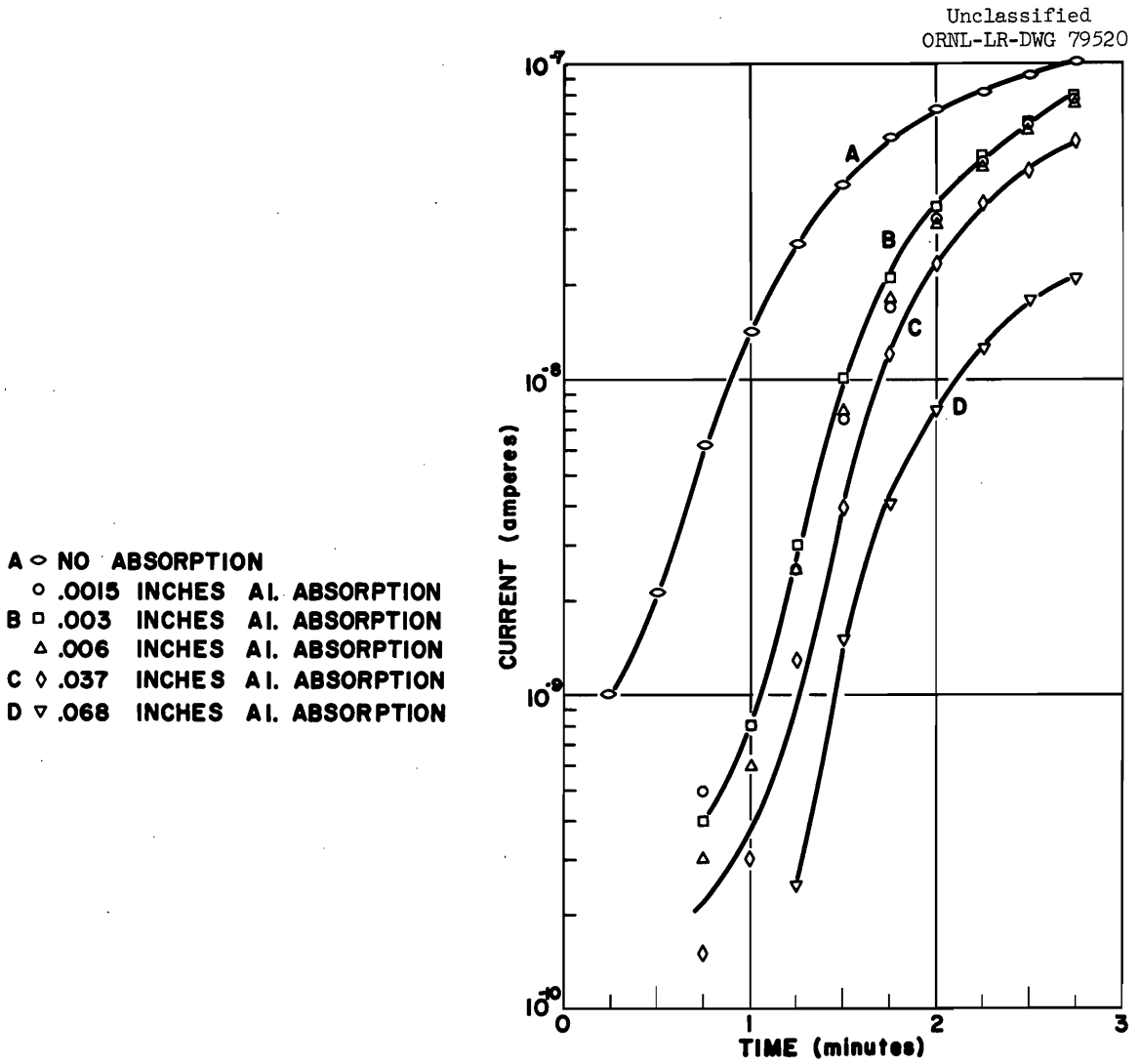

Fig. VI-2. Aluminum Absorption Curves for Sandia Corporation's Van de Graaff Accelerator in Self-Charging Condition on November 8, 1960. All measurements taken in the axis of the beam 7.5 cm from the end of the drift tube.

During this time the beam current built up from 10^{-9} to 10^{-7} amp because of self-charging. On the other hand, the staff associate's exposure was of two parts, one starting 15 sec after the belt was turned on and lasting for 10 sec and the other starting at 60 sec after the belt was turned on and lasting for 5 sec. He was exposed while conducting radiation measurements after the staff member had left the area because his face began to feel warm.

Average number-energy spectra were obtained from absorption data, and by combining these with beam-current measurements, the total incident energy and depth of dose could be calculated for certain anatomical parts of the involved persons (Table VI-3). All depth-dose calculations, including those for the staff member's eyes, were based on a constant rate of energy loss over the range of each electron, the range being determined by its starting energy. This technique was applied to the various number-energy spectra mentioned above. This inelegant, but simple, technique led to rapid depth-dose calculations that were sufficiently accurate for determining the postincident medical treatment required. The average calculated doses to selected parts of the staff member's eyes, with glasses, were 333 rad to the anterior portion, 57 rad to the lens, and 10 rad to the posterior portion.

In order to reduce the possibility that such an incident could reoccur, an additional safety device was added in the form of a remote monitoring channel with an alarm at the detector and in the accelerating rooms. The two channels previously used were reset to lower alarm settings. Personnel engaged in the use of such equipment are now routinely cautioned to always check a potential source of radiation with an instrument and never to assume that it is safe.

Table VI-3. Results of Calculations of Depth Doses in Skin

	Incident Dose (erg/cm^2)	Average Energy (Mev)	Average Calculated Depth Dose in Skin (rad)		
			At 0–2.5 mm	At 2.5–5.0 mm	At 5.0–8.0 mm
Staff member's fingers	2×10^5	0.545	5000	2400	520
Staff member's face	3.64×10^4	0.473	1300	190	20
Staff associate's fingers	2×10^4	0.545	515	250	55

ACTION ON REACTOR PROJECTS BY LICENSING AND REGULATING BODIES

J. R. Buchanan

The AEC is required by the Atomic Engergy Act of 1954 to protect the health and safety of the public from undue hazards relative to the operation of nuclear facilities. Regulations that are followed to ensure that this responsibility is fulfilled while furthering the simultaneous responsibility for developing the use of nuclear energy are published in the Code of Federal Regulations. Title 10 of the Code requires the AEC to make certain specific findings regarding the safety of the public before issuing either a construction permit or an operating license for a facility. It also requires authorization for changes in facility equipment or operation that contain an element of hazard not previously reviewed or approved. The license application record of various power reactors is reported in Table VI-4.* Recent actions and activities relative to specific power reactors are described below. Some information is also included on reactors that are not docketed for legal action.

Big Rock Point Reactor (Docket 50-155)

On December 8, 1962 the Big Rock Point Nuclear Plant of Consumers Power Company produced its first electricity.[15] The plant's boiling-water reactor had achieved initial criticality about two months earlier.[16]

The first amendment to the plant's technical specifications was approved on November 28. It allowed the relocation of two of the reactor neutron sources in order to meet operating specifications on the log

*The data in Table VI-4 should be brought up to date before publication.

Table VI-4. CALENDAR OF LEGAL STEPS IN LICENSING U.S. POWER REACTORS

REACTOR INFORMATION					CONSTRUCTION PERMIT					OPERATING LICENSE				CURRENT STATUS
Code No.	Name and Location Owner and Operator	Reactor Type	Authorized Power Mw(t)	Authorized Power Mw(e)	ACRS Action	Hearing Examiner Approval	Construction Permit No.	Construction Permit Date	Actual or Scheduled Completion Date	ACRS Action	Hearing Examiner Approval	Authorization to Operate No.	Authorization to Operate Date	As of Mar. 1, 1963
50-155	BIG ROCK POINT, Charlevoix County, Mich. Consumers Power Co.	Boiling water	157	47.8	Mar. 1960	May 1960	CPPR-9	5-31-60	1962	June 1962	Aug. 1962	DPR-6	8-30-62	Produced first electricity in Dec. 1962
50-205	BODEGA BAY, Bodega Bay, Calif. Pacific Gas & Electric Co.	Boiling water	1008	325					Jan. 1966					Construction permit application submitted
115-4	BONUS, Rincon, Puerto Rico USAEC Puerto Rico Water Resources Authority	Boiling water Nuclear superheat	50	16.3	Mar. 1960	June 1960	*	6-28-60	1963					Final hazards summary report filed in Feb. 1962
None	BORAX-V, NRTS, Idaho USAEC Argonne National Laboratory	Experimental boiling water Nuclear superheat	35.7	2.7			Not required					Not required		Achieved criticality in Feb. 1962
50-144	CVTR, Parr, S. C. Carolinas-Virginia Nuclear Power Associates	Pressurized D_2O Moderator and coolant	64.9	17	Dec. 1959	Apr. 1960	CPPR-7	5-4-60	Dec. 1962	July 1962	Oct. 1962		11-7-62	Planning criticality in spring 1963
	CITY OF LOS ANGELES, Corral Beach, Calif. City of Los Angeles Department of Water and Power	Pressurized water		490 gr 462 net	Oct. 1962 Nov. 1962				Jan. 1968					Preparing to apply for construction permit
50-206	COAST NUCLEAR STATION, Camp Pendleton, Calif. Southern California Edison Co.	Pressurized water	1210	395					June 1966					Construction permit application submitted in Feb. 1963
	CONNECTICUT YANKEE, Haddam Neck, Conn. Connecticut Yankee Atomic Power Co.	Pressurized water	1473	500	Feb. 1963				1967					Preparing to apply for construction permit
50-10	DRESDEN, Grundy County, Ill. Commonwealth Edison Co.	Boiling water	700	192 gr 180 net			CPPR-2	5-4-56	Sept. 1959	May 1959	Sept. 1959 Nov. 1959 Oct. 1960 May 1961 Sept. 1962	DPR-2	6-2-60 10-14-60 6-9-61 11-30-61 9-19-62	Initially critical Oct. 1959
115-1	ELK RIVER, Elk River, Minn. USAEC Elk River Rural Cooperative Power Association	Boiling water	58.2	22	Aug. 1959	Dec. 1959	*	12-18-59	1963	May 1962	Nov. 1962		11-10-62	Achieved criticality in Nov. 1962
None	EBWR, Argonne, Ill. USAEC Argonne National Laboratory	Experimental boiling water	100	4.5			Not required					Not required		Operating since Dec. 1956
None	EBR-II, NRTS, Idaho USAEC Argonne National Laboratory	Experimental breeder Fast-neutron spectrum Sodium cooled	62.5	16.5			Not required					Not required		Startup planned in 1963
None	EGCR, Oak Ridge, Tenn. USAEC Tennessee Valley Authority	Experimental Graphite moderated Helium cooled	84.3	22.3	May 1959		Not required		Dec. 1962			Not required		Under construction
50-16	FERMI, Monroe County, Mich. Power Reactor Development Co. Detroit Edison Co.	Fast-neutron spectrum Plutonium breeder Sodium cooled	200	60			CPPR-4	5-26-59 11-18-60 7-14-61 11-29-61 8-6-62	May 1963	Oct. 1962				Hearing on issuance of provisional operating license held in Jan. 1963
115-3	HALLAM, Hallam, Nebr. USAEC Consumers Public Power District	Graphite moderated Sodium cooled	240	76	July 1959 Feb. 1960	June 1960	*	6-6-60	July 1962	Feb. 1962 Feb. 1963	July 1962	DPRA-1	1-2-62 8-9-62	Provisional operating authorization permits "Wet Critical Experiments" and operation up to 15% of full power
50-133	HUMBOLDT BAY, Buhne Point, Calif. Pacific Gas & Electric Co.	Boiling water	163	48.5	June 1960 July 1960	Oct. 1960	CPPR-10	11-9-60	Aug. 1962	Apr. 1962	Aug. 1962	DPR-7	8-28-62	Achieved criticality in Feb. 1963
50-3	INDIAN POINT (CETR), Buchanan, N. Y. Consolidated Edison Co. of New York	Pressurized water Thorium converter	585	275 gr 255 net		Final design June 1961	CPPR-1	5-4-56 8-4-61	Apr. 1962	Nov. 1961	Feb. 1962	DPR-5	3-26-62	Reached full-power operation in Jan. 1963
115-5	LA CROSSE, Genoa, Wis. USAEC Dairyland Power Cooperative	Boiling water	165	50	Dec. 1962		Not required		1965			Not required		Hearing on issuance of construction permit held in Feb. 1963
None	N. S. SAVANNAH, Constructed at Camden, N. J. USAEC States Marine Lines	Pressurized water	69	22,000 shp			Not required		Dec. 1961	Dec. 1960	June 1961	Not required		Criticality achieved in Dec. 1961; full power in Apr. 1962; reached Galveston for overhaul in Feb. 1963
50-130	PATHFINDER, Sioux Falls, S. Dak. Northern States Power Co.	Boiling water Nuclear superheat	203	66	Feb. 1960	Apr. 1960	CPPR-8	5-12-60	June 1963					Initial criticality tentatively scheduled for 1963
50-171	PEACH BOTTOM, York County, Pa. Philadelphia Electric Co.	High temperature Unclad fuel Graphite moderated Gas cooled	115	40	Nov. 1961	Feb. 1962	CPPR-12	2-23-62	1964					Under construction
115-2	PIQUA OMR, Piqua, Ohio USAEC City of Piqua Municipal Power Commission	Organic cooled and moderated	45.5	11.4	July 1959	Jan. 1960	*	1-7-60	Oct. 1961	May 1961	June 1962	DPRA-2	8-23-62	Operating authorization is provisional; core loading not yet authorized
None	PWR, Shippingport, Pa. USAEC Duquesne Light Co.	Pressurized water	231	68 gr 60 net	Jan. 1954		Not required		Nov. 1957	Nov. 1957		Not required		Operating since Dec. 1957
50-204	RAVENSWOOD, New York City Consolidated Edison Co. of New York	Pressurized water	2030	1000					Oct. 1969					Construction permit application submitted to AEC in Dec. 1962
50-146	SAXTON, Berks County, Pa. Saxton Nuclear Experimental Corporation	Pressurized water	23.5	3.2	Sept. 1959	Jan. 1960	CPPR-6	2-11-60	1962	July 1961	Oct. 1961 Aug. 1962	DPR-4	11-15-61 10-3-62	Reached initial full-power operation in Jan. 1963
None	SRE, Santa Susana, Calif. USAEC Atomics International and Southern California Edison Co.	Graphite moderated Sodium cooled	20	6			Not required					Not required		Operating since Apr. 1957
50-18	VBWR, Alameda County, Calif. General Electric Company	Test reactor Boiling water	50	5			CPPR-3	5-14-56				DPR-1	8-31-57	Operating since Sept. 1957; operating restrictions required as of Aug. 1962
50-183	VESR, Alameda County, Calif. General Electric Company	Light water moderated Separate steam superheater	12.5		May 1961	July 1961	CPPR-11	8-10-61	Apr. 1962 to Feb. 1963					Hearing on issuance of provisional operating license planned for early 1963
50-29	YANKEE (YAEC), Rowe, Mass. Yankee Atomic Electric Co.	Pressurized water	540	155	Sept. 1957	Financial qualifications May 1959	CPPR-5	11-4-57 6-10-59	July 1960	Feb. 1960 May 1960 June 1960	April 1960 July 1960 Dec. 1960 June 1961	DPR-3	7-9-60 7-29-60 1-12-61 6-23-61	Operating since Aug. 1960; granted license amendment in Oct. 1962 for operation at 540 Mw(t)

*Reactors classified as parallel procedure cases (code numbers 115-1 to 115-5) do not require construction permits, but their construction and operation are authorized by AEC.

count-rate meter indications and make reactivity changes clearly discernible to the operators during startup. The change was made necessary by the unintentional overirradiation of the sources in the General Electric Test Reactor.[17-19] A second change in the technical specifications was proposed on January 19, 1963, by Consumers Power Company, that would provide for the use of two types of control rods.[20] No further details on this change request were available to the reviewer.*

Bodega Bay Nuclear Plant (Docket 50-205)

The Pacific Gas and Electric Company, on December 28, 1962, filed with the AEC an application for a 40-year license to construct and operate a nuclear power plant as unit No. 1 of its Bodega Bay Atomic Park. The unit is to be a single-cycle, forced-circulation, General Electric Company, boiling-water reactor with a nominal gross electrical output of 325 Mw and a corresponding thermal output of 1008 Mw. The estimated startup date for the reactor is January 1966. On the same date that the application was filed, PG&E submitted the preliminary hazards summary report for the reactor to the AEC.[21]

In early February 1963, PG&E issued a list of 32 questions raised publicly by persons opposing the Bodega Bay Plant, along with answers to the questions. The questions and answers covered "such subjects as reactor safety, plant economics, plans for public use of areas of Bodega Head not required for plant operation, marine biology, and the laws and regulations under which PG&E must build and operate the plant."[22]

---

*Details should be added before this statement is published.

Bonus Reactor (Docket 115-4)

On December 21, 1962 the Puerto Rico Water Resources Authority submitted information to the AEC to update the report on the design and fabrication of the pressure vessel of its 17.5-Mw(e) boiling-water superheater reactor.[23] Included in the submittal was a report by Southwest Research Institute on propagation of cladding microfissures, such as those found in the Bonus pressure vessel during fabrication. They were discovered in a sample removed from a cutout from the upper shell course of the vessel for installation of small superheater steam nozzles. The microfissures were not always detected by the routine dye penetrant tests and were therefore presumed to be present elsewhere in the vessel. The Institute tests indicated that even with the defects the vessel has a fatigue life that will be satisfactory for the service intended.

CVTR (Docket 50-144)

The Carolinas-Virginia Nuclear Power Associates, Inc., received a provisional operating license for their heavy-water-moderated tube reactor on November 7, 1962. The license authorized loading of the reactor, conduct of tests, and operation up to and including a steady-state power level of 44.3 Mw(t). The license expires 18 months after the date of issuance.[24]

City of Los Angeles Reactor

The Westinghouse Electric Corporation was selected by the Los Angeles Department of Water and Power (LADWP) to supply the reactor and associated equipment for its proposed 490-Mw(e) nuclear power station to

be located at Corral Beach (also referred to as Malibu Beach).[25] LADWP agreed on January 24, 1963 to pay Westinghouse $10,000 for an option (good until December 5, 1963) to accept Westinghouse's offer to build the reactor. General Electric Company and Babcock & Wilcox had also submitted proposals to LADWP. In recommendations to its Board of Directors, LADWP stated, "The [Westinghouse design] is the only concept of the three submitted that has received clear approval from the AEC for the Corral Beach site."[26]

The "approval" cited referred to two letters issued in the fall of 1962 by the ACRS.[27] The first letter, dated October 12, 1962, reported on containment systems proposed by Westinghouse and Stone and Webster, in conjunction, for a large pressurized-water reactor and by General Electric Company for a large boiling-water reactor. (Although Babcock & Wilcox submitted a reactor proposal to LADWP, they did not submit their containment concept to ACRS for review.) In each case, the ACRS focused its attention on the adequacy of engineered safeguards for the containment of any significant potential releases that might affect the health and safety of the public. Specifically, they stated:

> "The large pressurized water reactor has, as a proposed engineered safeguard concept, a double containment vessel which completely encloses the primary system. Back pumping and monitored leakage of a porous 'popcorn' concrete filled space between the containment walls and of all penetrations are provided. The system depends to some extent on keeping the space between the membranes at negative pressure. Redundancy in the pumping equipment is used to insure against failure. The containment membranes are independent as to leakage, but depend on the porous concrete for strength. The reinforced concrete on the outside augments containment vessel strength and provides shielding. The proposal includes holdup of routine radioactive gaseous release. In the opinion of the Advisory Committee on Reactor Safeguards this containment system is adequate.

"The proposed large boiling water reactor has a pressure suppression system surrounded by an additional containment of the dry well and suppression pool. The primary steam line extends beyond this double containment to the turbine building. Containment of fission product release from an accident thus depends upon rapid closure of isolation valves. In view of the stringent requirements imposed by the site, it is the Committee's opinion that the containment as proposed is not adequate in some respects for this reactor at this site. The Committee also believes that holdup of routine gaseous releases will be necessary during unfavorable meteorological conditions."

In a letter of November 14, 1962 the ACRS reported on the results of additional meetings with GE representatives that focused on inadequacies which the Committee believed to exist in the proposed engineered safeguards for the GE plant. The LADWP and GE representatives proposed the following engineered safeguards:

"1. A vapor suppression system which includes separation of primary and secondary containment.

"2. A secondary containment building to withstand 5 psi gauge and having a leakage rate of 1/2% per day or less.

"3. A method for rapid detection of fission product release from fuel element failures.

"4. Steam line tunnel integral with the secondary containment.

"5. Double isolation valves of proven type at least one to be a turbine stop valve protected by steam strainers.

"6. Holdup or detention capability for the anticipated noble gas releases to insure that no significant environmental exposures result.

"7. A turbine housing provided with controlled ventilation to filter and stack."

In addition, the ACRS made the following comments:

"The General Electric Company did not evaluate the consequences of a simultaneous release of pressure and fission products, an accident which they believe to be incredible. They propose to substantiate this at the construction permit phase.

"The Committee believes that the above additional engineered safeguards should be incorporated into the containment and confinement system for this reactor at this site. In

addition, the credibility of the simultaneous release accident should be evaluated before construction.

"The Committee wishes to emphasize the following consideration with respect to both the pressurized and boiling water reactors proposed for this site. The Committee has seen only preliminary characteristics of the reactors in either case. Due to their high power level and close proximity to densely populated areas, either of these reactors may require improvements in safety design beyond those features incorporated in existing reactors.

"The Advisory Committee on Reactor Safeguards believes that when these items are resolved, a boiling water reactor of the general type proposed, with adequately engineered safeguards, can be located at the 'Western Site' [Corral Beach] with reasonable assurance that such a reactor can be operated without undue risk to the health and safety of the public."

On February 6 the AEC Director of Regulations, H. L. Price, sent a letter to LADWP concerning their statement that the Westinghouse proposal was the only one of the three submitted that had clear approval from the AEC for the proposed site.[20] Excerpts from the letter follow:

"I trust that there has been no misunderstanding as to the scope and nature of the reviews which have been performed to date by the AEC and the Advisory Committee on Reactor Safeguards. Only two reactor concepts have been reviewed; namely, a proposal for a boiling water power reactor (General Electric) and a proposal for a pressurized water reactor (Westinghouse). Both of these reviews were preliminary in nature and were conducted solely for the purpose of obtaining a preliminary report from the Advisory Committee on Reactor Safeguards as to the suitability of the site for these two concepts.

"Neither the AEC staff nor the Commission has issued any evaluation of any reactor concept proposed for construction at Corral Beach.

"You will note from these letters [ACRS letters of October 12 and November 14, 1962] that the Committee concluded that either type of reactor, with adequately engineered safeguards, could be located at the proposed site.

"These reports constitute only preliminary evaluation of site suitability by the ACRS. Before a construction permit may be issued authorizing construction of any reactor at the proposed site, it will be necessary for the Department to file

> an application for a construction permit, including a comprehensive hazards summary report, for evaluation by the Division of Licensing and Regulation and the Advisory Committee on Reactor Safeguards. As provided by law for all such cases, a public hearing will then have to be held before the Commission acts on the case."

Although there was no evaluation by AEC of any of the proposed reactor concepts, it seems apparent that the containment system proposed by Westinghouse, along with ACRS acceptance of the system as "adequate" for the Corral Beach site without major revision, was the deciding factor in the awarding of the option to Westinghouse.

Connecticut Yankee Reactor

In late December 1962, plans to construct a 500-Mw(e) pressurized-water reactor at Haddam-Neck, Connecticut, were announced by the newly formed Connecticut Yankee Atomic Power Company.[28] Westinghouse and Stone and Webster designed the plant and will build it when construction approval is received. The plant has a tentative completion date of 1967.

The ACRS, on February 6, 1963, reported on the suitability of the Haddam-Neck site as follows:[29]

> "Because the Haddam-Neck site does not meet the present site distance criteria, reliance must be placed on proved engineered safeguards. In the case of this site, the ACRS believes the added control needed for protection of the health and safety of the public can be accomplished by the applicant.
>
> "The Advisory Committee on Reactor Safeguards believes that the Haddam-Neck site is suitable for the proposed Connecticut Yankee Atomic Power Company pressurized water reactor if adequate containment and one or more of the engineered safeguards presented in the report are provided. The Committee also believes that this site may be adequate for additional reactors of the same power level assuming that suitable containment and confinement are provided."

Dresden Reactor (Docket 50-10)

The Commonwealth Edison Company advised the AEC, on November 15, 1962, that it wished temporary exemption from a "cocked rod" criterion in its reactor license.[19] The exemption would apply during temporary removal of irradiated fuel from the 700-Mw(t) boiling-water Dresden reactor and would not involve loading of new fuel. The "cocked rod" provision was written to apply when adding new fuel to the reactor and thereby increasing the reactivity. The control rods would under this condition be inserted to decrease the reactivity if the need should arise. The AEC will consider approving a change in Dresden's license to make the exemption permanent.

On December 12 the AEC notified Commonwealth that credit could be taken for the use of respiration protective equipment in determining whether an individual is exposed to concentrations of airborne radioactive material in excess of limits specified in Appendix B, Table I, of the Code of Federal Regulations, Title 10, Part 20, during refueling operations, as requested by the company on November 2. The AEC included with the approval five pages of itemized additional requirements* which were not available to the reviewer.[18,30]

Elk River Reactor (Docket 115-1)

On December 21, 1962 the AEC Commissioners met and denied requests of various individuals to be recognized as parties to the Elk River reactor proceedings. These parties had asked for a review of the AEC Examiner's decision recommending that Allis-Chalmers Manufacturing

*Details should be added before this statement is published.

Company receive an 18-month provisional operating license.[31] The license was issued in mid-November 1962.[16] The memorandum and order issued by the Commission held that the intervention motion was "not timely" and that there was "no adequate showing of such a special interest in the proceeding such as would justify granting the permission to intervene." In addition, the Commission noted that neither Allis-Chalmers nor the Rural Cooperative Power Association had

> "taken the trouble to assist the Commission in adjudicating the questions raised...but left it to the Commission's regulatory staff to bear the brunt of doing so."

It was pointed out that

> "the failure of a party to answer a motion is deemed to constitute consent to it [and that] the proponent of official action should always assume the burden of showing that the relief it seeks should be granted."

The Commissioners later met on December 31 and confirmed the findings and conclusions of the AEC Examiner's initial decision and licensing actions of the Division of Licensing and Regulation.[32] The Commission did feel, however, that it would have been preferable for the Examiner to have "directed" the Division to issue the license, rather than "recommending" the issuance, as was done. Additionally, the Commissioners felt that the Examiner's decision should not have allowed the license to become effective "immediately," that is, before the Commission had an opportunity to formally review the decision. While they felt this was a desirable practice where no significant safety questions were raised in the proceedings, it was desirable to allow a brief period for a review of the decision when significant safety questions were raised.

Enrico Fermi Atomic Power Station (Docket 50-16)

A public hearing before an AEC Atomic Safety and Licensing Board concerning operation of the Fermi plant up to a power level of 1 Mw(t) was held between the dates of January 3 and 9, 1963.[33,34] The Power Reactor Development Company requested an immediate, effective decision from the Board that consisted of Samuel W. Jensch, AEC Chief Hearing Examiner (Board Chairman); Warren E. Nyer, Phillips Petroleum Company; and Thomas H. Pigford, University of California. PRDC indicated that the plant will be ready for fuel loading around February 20.

On December 12, during equipment testing, a sodium-water reaction occurred in the No. 1 steam generator of the Fermi plant because of failure of one or more tubes in the generator.[35] PRDC reported that the steam generator isolation system performed as it was designed to perform and that no release of fissionable material would have occurred even if the reactor had been operating at full power.[36] No more than one of the three steam generators will be required during the proposed operation at up to 1 Mw of thermal power. Intervening AFL-CIO unions had sought to have the January 3 hearing postponed because of the steam generator difficulties, but the Hearing Board did not think a delay was warranted. The Board had earlier postponed the hearing from December 3, 1962 to January 3, 1963 to allow intervenors more time to review analyses and reports pertaining to the reactor after their issuance in November 1962.

Hallam Reactor (Docket 115-3)

On February 6 the ACRS filed with the AEC a report on proposed operation of the Hallam sodium-cooled reactor up to a full power of 240 Mw(t). Portions of the report follow:[28]

"During low power operation, below 20 MWt, the following problems have appeared: (a) possible carburization of stainless steel due to carbon in the sodium; (b) fuel element orifice defects; (c) helium entrainment occurring in the secondary loops and in the primary pumps; and (d) high sodium oxide content in the coolant. It appears the foregoing have been or will be controlled or corrected satisfactorily.

"Leakage has appeared in one tube in an intermediate heat exchanger. This leak is so recent that data as to cause are not yet available. The tube has been removed for study and analysis and the tube sheet plugged. Problems of leakage in heat exchangers are common in industrial practice. Leakage in intermediate heat exchangers of liquid metal reactor systems is a cause for some concern since conceivably radioactive sodium could be released into the atmosphere.

"The applicant and the Regulatory Staff are conducting studies which should determine the magnitude of this problem and develop an adequate solution for it. The Committee is of the opinion that such measures, together with appropriate liquid level sensors and alarms such as the applicant has installed, coupled with operational vigilance, will afford adequate protection from a safety standpoint.

"It was reported that no nuclear problems appeared during the wet critical phase or subsequent operation up to a power level of 20 MWt or 8% of full power. The reactor reached 15% of full power on January 30, 1963. Operation at this power level is planned to continue for approximately 30 days.

"The Advisory Committee on Reactor Safeguards believes that, if continued operation at the 38 MWt power level produces no additional problems which are not resolved to the satisfaction of the Regulatory Staff, operation of the reactor up to full power level (240 MWt) may be conducted without undue hazard to the health and safety of the public."

Humboldt Bay Reactor (Docket 50-133)

On February 16, 1963 the 163-Mw(t) Humboldt Bay boiling-water reactor achieved criticality.[37] The Pacific Gas and Electric Company had been issued an 18-month provisional operating license for the reactor in August 1962.[16] Before the reactor fuel was loaded, the AEC authorized PG&E to make some minor changes in the plant. Among these was the installation of an absolute filter in the gas-treatment system and replacement of hollow metal doors with watertight marine doors in two personnel air locks.[38]

Indian Point Reactor (Docket 50-3)

The Consolidated Edison Company of New York informed the AEC, on September 28, 1962, that it was negotiating with the Westinghouse Corporation to replace the thorium-uranium core A of its Indian Point pressurized-water reactor with a core of slightly enriched uranium.[18] The AEC replied on December 7 that it could find no reason from a safety standpoint that would prevent approval of core B providing that the design is appropriate for operation with soluble boron control and whatever core internal instrumentation may be provided.[39] Since, however, Consolidated Edison had not discussed the safety implications of the core design, the AEC had several comments and questions:

> "1. Experience at the Yankee plant indicates that mass transfer of silver from control rods of a design similar to that which you have proposed can lead to undesirable contamination of equipment. Appropriate provisions for prevention of this transfer should be considered.
>
> "2. Comprehensive criteria providing adequate shutdown reactivity margins under all proposed operating conditions, such as temperature, boron concentrations, and fuel burnup, should be adopted and followed in the design. Stuck rod margins should also be included.
>
> "3. Thermal criteria, particularly the minimum departure from nucleate boiling ratio, should be established for all normal operating modes and, as appropriate, for nonroutine conditions, such as might occur during credible accidents.
>
> "We suggest further that the following questions should be satisfactorily resolved in the detailed design:
>
> "1. Has adequate consideration been given to minimizing the probability and consequences of a loose fastener obstructing the operation of a control rod?
>
> "2. Why is region 1 of Core B enlarged at the expense of region 2? (See...Fig. 2-5 of Exhibit K-5, Rev. 1 your application for license.)
>
> "3. Will the absence of any device to hold down individual fuel rods result in any deleterious effect on operation of the core?

"4. The various credible accidents should be reviewed wherein a question may arise as to whether or not Ag-In-Cd rods may melt, and the consequences which may be expected should be established. This analysis should include consideration of the possibility of a loss of coolant accident which leads to control rod melting which is followed by injection of water into a core with no control rods. Also, attention is called to [a statement in your report] which indicates that some control rod melting may result if a loss of flow accident occurs.

"5. Is there adequate experimental evidence on the use of fuel elements which are designed on the basis of the cold-worked strength of stainless steel?"

Early in 1963, Consolidated Edison announced that the Indian Point reactor had reached its full power of 275 Mw(e).[40] The reactor achieved initial criticality in August 1962.

La Crosse Reactor (Docket 115-5)

The ACRS, on December 15, 1962, reported on the proposed 165-Mw(t) La Crosse direct-cycle, forced-circulation, boiling-water reactor that is to be built by the Allis-Chalmers Manufacturing Company and operated by the Dairyland Power Cooperative.[41] The ACRS commented as follows:

"Many features of the reactor design have not been determined at this time. The applicant has proposed an extensive research and development program to provide information for the final design. Among the topics to be explored in this program and in the final design are: (1) performance and mode of operation of the bottom entry control rod drives and poison elements; (2) specific operating limits for the fuel elements; (3) use of low-alloy steel in portions of the primary system; (4) feasibility of obtaining satisfactory load control by automatic regulation of the primary coolant flow; and (5) the required engineered safeguards for containment. The Committee desires to be kept informed of the progress of this research and development program as it relates to the final design.

"With satisfactory completion of the above program, the Advisory Committee on Reactor Safeguards believes that a boiling water reactor of the proposed general type and power level can be constructed at this site with reasonable assurance that it can be operated without undue hazard to the health and safety of the public."

A public hearing* to consider issuance of the reactor construction authorization was set for February 8, 1963 at La Crosse, Wisconsin.[42] The hearing was rescheduled from January 24. Hearing Board members are Arthur W. Murphy, AEC Examiner; Dr. Eugene Grueling, Duke Universiy; and Hugh Paxton, Los Alamos Scientific Laboratory.[43]

Nuclear Merchant Ship N.S. SAVANNAH

The ACRS at a January 31 to February 2 meeting reviewed a request submitted by the AEC-Maritime Joint Group concerning the N.S. SAVANNAH.[29] Specifically the group wished to obtain ACRS approval of two significant proposed changes. The first, No. 13, pertained to changes in the reactor compartment ventilation and filtration system, and the second, No. 18, pertained to changing the reactor control rod drives. An earlier ruling concerning these and other points was released by the ACRS on November 14, 1962.[16] After the January 31 to February 2 meeting, the ACRS issued a report that included the following:

> "It is not intended in this report to review comments made in past Committee reports on this reactor. However, the Committee still believes that a reliable auxiliary power source with adequate maneuvering and propulsion reversing capability should be installed. The Committee believes that the installation of a control rod drive system that will not require an inert gas atmosphere in the primary containment should be carried out as soon as possible.
>
> "These and a number of other overhaul items appear to be postponed to some indefinite time beyond their original proposed date at Galveston. This leads the Committee to recommend that there be a complete review of the status of the ship and its proposed post-Galveston operation before it puts to sea again.
>
> "In regard to Change No. 13, the proposed ventilation, filter, and monitoring changes should substantially decrease

*Details should be added before this review is published.

any radioactive releases associated with the reactor compartment. The use of spring-loaded doors and the alarm system proposed will help to assure that negative pressures will be maintained in the reactor compartment. In addition, the improved installation will reduce the temperatures in the reactor compartment and permit more frequent inspections. The Committee believes that the revisions proposed for the filter and ventilation systems provide adequate assurance that they will function properly in event of an accident resulting in the release of fission products to the compartment.

"Change No. 18 requests the substitution of hermetically sealed Marvel-Schebler control rod drives instead of the existing hydraulic-electric drives. In general, the Committee is impressed with the advantages to be gained with the new type of rod drive. The Committee has a reservation concerning the lack of a spring to aid in the initiation of rapid rod insertion in event a scram is required.

"A new method of rod actuation and control is proposed. This system is novel and unproven. As presently conceived it would give no read-out of individual control rod position in the control room and would operate the rod groups according to a preset plan. The Committee can see no valid reason for not indicating the rod position in the control room and recommends that this be done. The Joint Group has stated that it is feasible to do this. In many ways the proposed method of control may prove in the long run to be safer than others. However, this reactor is a first of its kind with no prototype, no hot critical flux measurements, and no incore instrumentation. Therefore, the Committee believes that introduction of this new system should be carried out carefully and prudently. The Committee recommends that the rods, even with the new system, be operated one group at a time from the control room by means of a group select switch as is currently being done with the system now in use.

"The Committee believes that the proposed ventilation system changes outlined in Change No. 13 as modified by the Regulatory Staff represent a distinct improvement in safety of the N.S. SAVANNAH. The Committee believes that with the changes stated above, the Marvel-Schebler rod drive system also represents an improvement in safety. However, the Committee cannot recommend full approval of the proposed control system since the testing program has not been completed.

"The Committee specifically cannot recommend any approval of operation beyond Galveston and feels that such approval must await a full review of the ship status at that time."

The N.S. SAVANNAH arrived in Galveston on February 5 for the planned overhaul.

Pathfinder Reactor (Docket 50-130)

The Northern States Power Company on November 26, 1962 submitted to the AEC additional technical information that the Staff had requested in order to complete its review of the operating license request for the 203-Mw(t) boiling-water Pathfinder reactor.[16,19] A date has not been scheduled for a hearing for the license.

Ravenswood Reactor (Docket 50-204)

On December 10, 1962 the Consolidated Edison Company of New York applied to the AEC for a construction permit to build a 1000-Mw(e) pressurized-water reactor on its Ravenswood site in the heart of New York City.[44] Submitted with the application was a preliminary hazards summary report that was prepared by Westinghouse Electric Corporation and Stone and Webster Engineering Corporation in conjunction with Consolidated Edison. The reactor containment scheme would be essentially the same as that proposed by Westinghouse for the City of Los Angeles Reactor (see City of Los Angeles Reactor review). The earliest completion date specified for the reactor was October 1, 1969, with Consolidated Edison allowing itself several years to obtain the construction permit. A detailed review of the application will be made by the AEC Regulatory Staff and the ACRS, after which a public hearing will be held to consider issuance of the license.

The Ravenswood review will be watched with great interest by all members of the nuclear community. The AEC's Reactor Site Criteria that became effective in May 1962 placed a heavy reliance on distance and, in effect, ruled large reactors out of large cities. Approval of such

projects as the City of Los Angeles Reactor will mean that the present siting restrictions are being relaxed. Approval of the Ravenswood reactor, however, would be a complete turnabout in that the distance criteria would be completely replaced by a reliance on engineered safeguards.

Saxton Reactor (Docket 50-146)

The Saxton pressurized-water reactor operated "efficiently and safely" at its initial top rating of 20 Mw(t) in January 1963.[45] It is now embarking on the research and development program for which it was built.[16,46]

On January 28, Saxton acknowledged receipt of an AEC letter of January 18 concerning a hydrogen problem that developed in another reactor (see Hydrogen Fire at PM-3A Nuclear Plant in the previous issue of Nucl. Safety)[47] and recommending a review of the Saxton design for similar conditions.[38] Saxton advised the AEC that their operating personnel were now well aware of the problem and that a program of monitoring for the presence of hydrogen in several locations in the reactor containment vessel was in progress.

Southern California Edison Coast Nuclear Station (Docket 50-206)

On February 1, 1963 the Southern California Edison Company filed with the AEC an application for a construction permit along with a hazards summary report for a proposed 395-Mw(e) pressurized-water reactor to be constructed and operated at Camp Joseph H. Pendleton Naval Reservation.[48] The reactor is to be Unit No. 1 of a nuclear station to be located at the site. The unit will be designed and constructed by Westinghouse Electric Corporation and Bechtel Corporation as

cocontractors. The earliest estimated completion date for the unit is June 30, 1966.

Vallecitos Boiling-Water Reactor (Docket 50-18)

During the review period, the General Electric Company reported on several minor changes at the 50-Mw(t) Vallecitos Boiling-Water Reactor (VBWR) that were considered not to involve unreviewed safety questions.[18,30,43,49] On January 17, 1963 the AEC notified GE that the Fuel Storage Pool in the Radioactive Materials Laboratory could be included in the description of the indemnified location of the indemnity agreement for the Vallecitos site.[49] This extends insurance coverage to the storage pool. General Electric had requested[43] the additional coverage on December 26.

Vallecitos Experimental Superheat Reactor (Docket 50-183)

On December 21, 1962 the General Electric Company submitted to the AEC amendment No. 6 to the construction permit for the 12.5-Mw(t) Vallecitos Experimental Superheat Reactor.[50] Included was supplementary information to the hazards summary report and test and operating experience on the control rod drive system for the reactor.

Yankee Reactor (Docket 50-29)

The Yankee Atomic Electric Company submitted to the AEC in October and December 1962 amendments to the license for the 540-Mw(t) pressurized-water Yankee reactor.[18,49] The amendments were made in order to record minor changes made in the facility or operating instructions that had been previously authorized by the AEC.

CHANGES IN LICENSING REGULATIONS

J. R. Buchanan

AEC rules and regulations, as found in Title 10, Code of Federal Regulations, Chapter 1, are frequently amended. Among those recently changed or being considered for change are Part 2, Rules of Practice; Part 20, Standards for Protection Against Radiation; Part 30, Licensing of By-Product Material; Part 40, Licensing of Source Material; Part 50, Licensing of Production and Utilization Facilities; Part 70, Special Nuclear Material; Part 71, Regulations to Protect Against Criticality in Shipment of Special Nuclear Materials; Part 115, Procedures for Review of Certain Nuclear Reactors Exempted from Licensing Requirements; and Part 150, Transfer of Regulatory Authority. The various changes are discussed below.

Part 2, Rules of Practice

On November 7, 1962, a revision of the portions of Part 2 that are concerned with license violation notices was published in the Federal Register. The change eliminated the necessity for the licensee to admit or deny a violation. It also served to eliminate the warning that failure by the licensee to reply to the AEC might result in a "show cause" action. The AEC felt that most violations were of a minor technical nature and that the provisions were not necessary since violations were usually promptly corrected by the licensees.[51]

Proposed amendments to Part 2 that were described as being essentially clarifying and corrective were published in the Federal Register of January 16, 1963. A period of 30 days was allowed for comment.[52]

Part 20, Standards for Protection Against Radiation

A proposed amendment to Part 20 on the modification of labeling requirements for radioactive material containers was published[53] in the Federal Register of October 17, 1962. A period of 60 days was allowed for comment. During this time, 15 comments were received by the AEC.[54-57] It was generally felt by those commenting that, although the proposed changes might eliminate some unnecessary requirements, the complicated set of rules proposed was difficult to interpret.

Part 30, Licensing of By-Product Materials

On January 9, 1963 a proposed amendment was published in the Federal Register that would provide that only the radiotracer firm that introduces byproduct material into a product must be licensed.[58] It also provided that the company for which the radiotracer services are rendered and which has control and ultimate possession of the product will not need a specific license.

Part 40, Licensing of Source Material

The AEC made effective upon publication in the Federal Register of December 29, 1962 an amendment to Part 40 that approved the use of uranium counterweights in rockets and missiles without an AEC license.[59] The counterweights must, however, have been manufactured under a specific AEC license and under specifications set out in the license.

Part 50, Licensing of Production and Utilization Facilities

An amendment to Part 50 that would present a more explicit identification of the principal safety determinations to be made by the AEC when it

issues a provisional construction permit was published[59] in the Federal Register of December 29, 1962. The amendment became effective 30 days after publication. It was published initially for comment in February 1960. It was then revised on the basis of the comments and reissued on March 15, 1962 for further public comment. No comments were received.

Part 70, Special Nuclear Material

On March 5, 1963 the AEC had a proposed amendment to Part 70 published in the Federal Register for comment.[60] The AEC in making safety evaluations of proposed uses of special nuclear material reviews the applicant's procedures for avoiding a condition of accidental criticality using data primarily obtained from work done under AEC contracts. Over a period of years this has resulted in the establishment of informal standard guides. The proposed amendments incorporated these criteria.

Part 71, Regulations to Protect Against Criticality in Shipment of Special Nuclear Materials

A proposed amendment to Part 71 was also published[60] in the Federal Register of March 5, 1963. The amendment incorporates shipping criteria developed over a number of years. Information is also included that was developed in recent studies of possible accident conditions and data on tests of existing types of containers.

Part 115, Procedures for Review of Certain Nuclear Reactors Exempted from Licensing Requirements

A proposed rule to amend Part 115 was published[58] in the Federal Register of January 11, 1963. The rule concerned procedures for making changes and conducting tests and experiments not specifically provided

for in the reactor facility license. The AEC allowed 60 days for public comment on the change.

Part 150, Transfer of Regulatory Authority

A proposed agreement for the transfer of regulatory authority from the AEC to the state of Arkansas was published[61] in the Federal Register of February 9, 1963. Under the agreement the AEC would transfer authority over byproduct materials, source materials, and special nuclear materials in quantities not sufficient to form a critical mass. The proposed agreement will go into effect July 1, 1963.

SAFEGUARDS REPORTS AND SELECTED READING

The recently issued safeguards reports and selected literature pertaining to hazards of reactors are listed below for reference. Because of the similarity of many reactors (in particular, research reactors), this list is not intended to be all inclusive.

Hazards and Safeguards Reports

1. Allis-Chalmers Manufacturing Company, Hazards Summary Report for Construction Authorization of the La Crosse Boiling-Water Reactor, USAEC Report ACNP-62574, October 1962.
2. L. J. Kock et al., EBR-II Critical Experiments, Experimental Program, Experimental Procedures and Safety Considerations, USAEC Report ANL-6299, Argonne National Laboratory, February 1961.
3. J. R. Coombe and L. D. Stephenson, Hazards Report for PM-2A Core II, USAEC Report APAE-121, Alco Products, Inc., June 21, 1962.
4. J. L. Murray (Ed.), Final Hazards Summary Report for the ESADA Vallecitos Experimental Superheat Reactor, USAEC Report APED-3958, General Electric Co., Oct. 1, 1962.
5. T. C. Engelder and J. M. Doederlein, Spectral Shift Control Reactor Basic Physics Program, Small Lattice Experiments — Hazards Evaluation, USAEC Report BAW-1248, Babcock and Wilcox Co., May 1962.
6. General Electric Company, Summary Safeguards Report for the Critical Experiment Facility, Vallecitos Atomic Laboratory, USAEC Report GEAP-4054, July 1962.
7. F. L. Bentzen and J. G. Crocker, SPERT IV Hazards Summary Report, USAEC Report IDO-16689, Phillips Petroleum Co., July 7, 1962.

8. Babcock and Wilcox Co. and Ebasco Services, Inc., Advanced Test Reactor — ATR Preliminary Safety Analysis Report, USAEC Report IDO-24040, April 1962.

9. Aerojet-General Nucleonics, Army Gas-Cooled Reactor Systems Program, Final Hazards Summary Report for the ML-1 Nuclear Power Plant, USAEC Report IDO-28560, November 1960, and Supplement 1, September 1961.

10. S. Hirayame et al., The Japan Engineering Test Reactor, Preliminary Design Report, Part VIII, Safety Analysis, Japanese Report JETR-40, Sept. 1, 1962.

11. W. U. Geer et al., Hazards Evaluation for the Los Alamos Critical Assembly Facility, USAEC Report LAMS-2698, rev., Los Alamos Scientific Laboratory, Nov. 6, 1962.

12. T. Dobry, PM-3A Nuclear Power Plant Hazards Summary Report, Safety Evaluation, USAEC Report MND-M3A-2496-II (Add.), Martin Company, November 1961.

13. H. N. Berkow and V. G. Kelly, Final Safety Evaluation of a Ten Watt Strontium-90 Fueled Generator for a Deep Sea Application — SNAP 7E, USAEC Report MND-P-2761, Martin Company, May 1962.

14. Safeguards Report for Worcester Polytechnic Institute Reactor, USAEC Report NP-8988, July 15, 1960.

15. Biomedical Radiation Research Facility Containing the DASA-TRIGA Reactor, Enclosure I: General Information, Enclosure II: Hazards Summary Report, USAEC Report NP-9535.

16. Enrico Fermi Atomic Power Plant Revised License Application, USAEC Report NP-10458, Vol. 8.

17. Westinghouse Electric Corporation, S1W Core 4a Accident Studies, USAEC Report NRFS-P-4328, Sept. 29, 1960.

18. Westinghouse Electric Corporation, S1W Core 4a Accident Analysis, USAEC Report NRFS-P-4517, Oct. 25, 1960.

19. Experimental Gas Cooled Reactor, Final Hazards Summary Report, Vol. I. Description and Hazards Evaluation, USAEC Report ORO-586, Oct. 10, 1962.

20. KIWI-A Reactors — Prime and Three, Off-Site Radiological Safety (Final) Report, USAEC Report OTO-60-1, 1960.

21. P. D. O'Brien, The Sandia Pulsed Reactor Facility (SPRF), USAEC Report SC-4737(M), Sandia Corporation, October 1962.

22. Preliminary Hazards Summary Report for Ames Laboratory Research Reactor, Ames, Iowa, USAEC Report TID-14881, May 1960.

Operations Reports

1. D. G. Breckton and J. J. Collins, Control and Safety in the Operation of the NRX and NRU Reactors, Canadian Report AECL-1486, April 1962.

2. J. F. Matousek (Comp.), Modification of the Experimental Boiling Water Reactor (EBWR) for Higher-Power Operation, USAEC Report ANL-6552, Argonne National Laboratory, April 1962.

3. H. Ager-Hassen et al., Experience from the Operation of the Halden Heavy Water Boiling Reactor on Its First Fuel Charge, June 1959 to April 1961, Norwegian Report HPR-26, September 1962.

4. R. C. Lloyd et al., Operating Experience in the Hanford Plutonium Critical Mass Facility, USAEC Report HW-SA-2622, Hanford Atomic Products Operation, May 8, 1962.

5. J. C. Fox et al., Startup Experience with the Plutonium Recycle Test Reactor, USAEC Report HW-SA-2644, Hanford Atomic Products Operation, June 15, 1962.

6. Annual Report of the Japan Atomic Energy Research Institute for the Fiscal Year Ending April 1961, Japanese Report JAERI-7020, 1961.

7. K. J. Vogt et al., Fundamentals and Methods of Environmental Monitoring, Environmental Radioactivity of the Jülich Nuclear Research Installation, Annual Report for 1960, JÜL-21-ST, April 1961.

8. Third Annual Report April 1st, 1961–March 31, 1962, High Temperature Reactor Project "Dragon," USAEC Report NP-12082.

9. Operating History of the S1W Reactor Vessel, USAEC Report NRFSE-M-801, June 21, 1962.

10. A Review of Yankee Operating Data, USAEC Report NYO-2482, November 1961.

11. Oak Ridge National Laboratory, Nuclear Safety Program Semiannual Progress Report for Period Ending June 30, 1962, USAEC Report ORNL-3319, Aug. 24, 1962.

12. J. A. Cox, ORR Operations for Period April 1961 to April 1962, USAEC Report ORNL-TM-351, Oak Ridge National Laboratory, Oct. 16, 1962.

13. R. C. Marsh and W. J. Whitfield, Operating Manual for the Sandia Clean Bench, USAEC Report SC-4733, November 1962.

14. A. A. Johnson, Post Startup Reactor Safety, USAEC Report TID-15677, April 1962.

Bibliographies

1. S. A. V. Raghunath (Comp.), Glass Dosimetry – A Bibliography, AEET/RMS/6, April 1962.

2. R. Steinnon-Bovy, Bibliography: Iodine-132 (1939–1961), BLG-B-2, January 1962.

3. R. Steinnon-Bovy, Bibliography: Iodine-133 (1939–1961), BLG/B-3, January 1962.

4. T. F. Connolly, Bibliography on Nuclear Reactor Fuel Reprocessing and Waste Disposal, Vol. 5. Plants and Equipment, USAEC Report ORNL-2971, Oak Ridge National Laboratory, 1962.

5. T. F. Connolly, Bibliography on Nuclear Reactor Fuel Reprocessing and Waste Disposal, Vol. 6. Process Chemistry and Engineering, USAEC Report ORNL-2971, Oak Ridge National Laboratory, 1962.

6. T. F. Connolly, Bibliography on Nuclear Reactor Fuel Processing and Waste Disposal, Vol. 7. Surveys (General), USAEC Report ORNL-2971, Oak Ridge National Laboratory, 1962.

7. T. F. Connolly, Bibliography on Nuclear Reactor Fuel Reprocessing and Waste Disposal, Vol. 8. Waste Treatment, USAEC Report ORNL-2971, Oak Ridge National Laboratory, 1962.

8. R. J. Smith (Comp.), Reactor Safety – A Literature Search, USAEC Report TID-3525, rev. 4, March 1962.

REFERENCES

Homogeneous Reactor Experiment No. 2 Operating Experience

1–6. (Held over from Vol. 4, No. 3.)

Accidents in Nucler Energy Operations

7. Major Activities in the Atomic Energy Programs, January–December 1961, pp. 311–315 and 367–371, January 1962.
8. Major Activities in the Atomic Energy Programs, January–December 1962, pp. 401–403 and 437–442, January 1963.
9. W. B. Cottrell, Accidents in Nuclear Energy Operations, Nucl. Safety, 2(4): 55–63 (June 1961).
10. J. R. Buchanan, Accidents in Nuclear Energy Operations, Nucl. Safety, 3(4): 90–96 (June 1962).
11. Investigating Committee, Investigation of Accident in SM-10, U.S. Government Memorandum, August 17, 1962.
12. W. D. Norwood, DTPA – Effectiveness in Removing Internally Deposited Plutonium from Humans, J. Occupational Med., 2(8): 371–376 (August 1960).
13. B. R. Fish, Oak Ridge National Laboratory, personal communication to L. J. King, Oak Ridge National Laboratory, January 1963.
14. Division of Operational Safety, U.S. Atomic Energy Commission, Washington 25, D.C., Serious Accidents, Issue No. 185, Aug. 2, 1962.

Van de Graaff Electron-Beam Exposure at Sandia Corporation

No references.

Action on Reactor Projects by Licensing and Regulating Bodies

15. The State of Michigan, Atomic Energy Clearing House, 8(51): 17–18 (Dec. 17, 1962).

16. J. R. Buchanan, Action on Reactor Projects by Licensing and Regulating Bodies, Nucl. Safety, 4(3): ____ (March 1963).

17. Facility Licensing, Atomic Energy Clearing House, 8(46): 23–24 (Nov. 12, 1962).

18. Facility Licensing, Atomic Energy Clearing House, 8(47): 6–8 (Nov. 19, 1962).

19. Facility Licensing, Atomic Energy Clearing House, 8(50): 12–15 (Dec. 10, 1962).

20. Facility Licensing, Atomic Energy Clearing House, 9(7): 32–35 (Feb. 18, 1963).

21. Application for a 40-Year ... License, Atomic Energy Clearing House, 9(1): 1 (January 7, 1963).

22. A List of Questions Raised Publicly, Atomic Energy Clearing House, 9(6): 16–23 (Feb. 11, 1963).

23. Facility Licensing, Atomic Energy Clearing House, 9(5): 31–32 (Feb. 4, 1963).

24. Facility Licensing, Atomic Energy Clearing House, 8(49): 5–6 (Dec. 3, 1962).

25. Selection by the Los Angeles Department of Water and Power, Atomic Energy Clearing House, 9(4): 1 (Jan. 28, 1963).

26. Westinghouse Wins LADWP Bidding, Nucleonics Week, 4(5): 1–3 (Jan. 31, 1963).

27. Reporting on the City of Los Angeles Water and Power Department, Atomic Energy Clearing House, 8(50): 2-3 (Dec. 10, 1962).

28. Organization of Connecticut Yankee Atomic Power Co., Atomic Energy Clearing House, 8(52): 1 (Dec. 24, 1962).

29. Reports by the Advisory Committee on Reactor Safeguards, Atomic Energy Clearing House, 9(7): 13-16 (Feb. 18, 1963).

30. Facility Licensing, Atomic Energy Clearing House, 8(53): 4-6 (Dec. 31, 1962).

31. Denial of Requests, Atomic Energy Clearing House, 8(53): 14-15 (Dec. 31, 1962).

32. A Memorandum and Order, Atomic Energy Clearing House, 9(1): 6-7 (Jan. 7, 1963).

33. While the Intervening Unions Have Withdrawn, Atomic Energy Clearing House, 9(1): 16-25 (Jan. 7, 1963).

34. Organization Notes, Personnel, etc., Atomic Energy Clearing House, 9(2): 23-24 (Jan. 14, 1963).

35. A Request for Postponement, Atomic Energy Clearing House, 8(52): 19 (Dec. 24, 1962).

36. The Union Request for Postponement of the PRDC Hearing, Atomic Energy Clearing House, 8(53): 11-12 (Dec. 31, 1962).

37. Company Notes, Personnel, etc., Atomic Energy Clearing House, 9(8): 41 (Feb. 25, 1963).

38. Facility Licensing, Atomic Energy Clearing House, 9(6): 6-10 (Feb. 11, 1963).

39. Facility Licensing, Atomic Energy Clearing House, 8(51): 12-26 (Dec. 17, 1962).

40. The Indian Point Atomic Station, Atomic Energy Clearing House, 9(5): 1 (Feb. 4, 1963).

41. A Public Hearing Has Been Set, Atomic Energy Clearing House, 8(52): 20-21 (Dec. 24, 1962).

42. Organization Notes, Personnel, etc., Atomic Energy Clearing House, 9(3): 22 (Jan. 21, 1963).

43. Facility Licensing, Atomic Energy Clearing House, 9(2): 13-17 (Jan. 14, 1963).

44. Details of the Construction Permit Application, Atomic Energy Clearing House, 8(51): 7-17 (Dec. 17, 1962).

45. Organization Notes, Personnel, etc., Atomic Energy Clearing House, 9(5): 35-36 (Feb. 4, 1963).

46. J. R. Buchanan, Action on Reactor Projects by Licensing and Regulating Bodies, Nucl. Safety, 4(2): 107-114 (Dec. 1962).

47. J. R. Buchanan, Hydrogen Fire at PM-3A Nuclear Plant, Nucl. Safety, 4(3): _____ (March 1963).

48. An Application for a Construction Permit, Atomic Energy Clearing House, 9(6): 1 (Feb. 11, 1963).

49. Facility Licensing, Atomic Energy Clearing House, 9(4): 21-26 (Jan. 28, 1963).

50. Facility Licensing, Atomic Energy Clearing House, 9(1): 10-12 (Jan. 7, 1963).

Changes in Licensing Regulations

51. A Revision of AEC Regulations on Violation Notices, Atomic Energy Clearing House, 8(45): 2 (Nov. 5, 1962).

52. Organization Notes, Personnel, etc., Atomic Energy Clearing House, 9(3): 22 (Jan. 21, 1963).

53. J. R. Buchanan, Changes in Licensing Regulations, Nucl. Safety, 4(3): ____ (March 1963).

54. Following Below Are 3 Comments, Atomic Energy Clearing House, 8(50): 18-19 (Dec. 10, 1962).

55. Part 20, Atomic Energy Clearing House, 8(52): 8-12 (Dec. 24, 1962).

56. Comments on a Proposed AEC Rule, Atomic Energy Clearing House, 9(2): 21-22 (Jan. 14, 1963).

57. Comments on a Proposed AEC Regulatory Amendment, Atomic Energy Clearing House, 9(3): 16-17 (Jan. 21, 1963).

58. AEC Regulations, Atomic Energy Clearing House, 9(2): 22-23 (Jan. 14, 1963).

59. AEC Regulations Are Being Amended, Atomic Energy Clearing House, 8(53): 12-13 (Dec. 31, 1962).

60. Various Amendments to AEC Regulations, Atomic Energy Clearing House, 9(9): 24-25 (March 4, 1963).

61. An Agreement Proposed by the State of Arkansas, Atomic Energy Clearing House, 9(6): 25-26 (Feb. 11, 1963).

Internal Distribution

1. S. E. Beall
2. F. T. Binford
3. J. R. Buchanan
4. K. E. Cowser
5–6. W. B. Cottrell
7. E. E. Gross
8. C. E. Guthrie
9. W. L. Harwell (K-25)
10. W. H. Jordan
11. H. G. MacPherson
12–16. E. J. Murphy
17. A. W. Savolainen
18. M. J. Skinner
19. J. A. Swartout
20. C. S. Walker
21. A. M. Weinberg
22–27. Laboratory Records Department
28. Laboratory Records Department, RC

External Distribution

29–30. R. Anderson, Patent Branch, AEC, Washington
31. H. A. Blair, University of Rochester, Rochester, N.Y.
32. B. F. Boardman, Phillips Petroleum Co., Idaho Falls, Idaho
33–34. E. T. Bond, OTIE, Oak Ridge
35. T. S. Chapman, Dow Rocky Flats, Denver, Colorado
36. B. J. Colley, TISE, Oak Ridge
37. James Dodd, Babcock & Wilcox, Lynchburg, Virginia
38. W. E. Dreeszen, Ames Laboratory
39. K. A. Dunbar, Chicago Operations Office
40. W. E. Elliott, Patent Group, Livermore, California
41–43. A. Glassner, Argonne National Laboratory
44. E. E. Hall, Office of Ind. Dev., Washington, D.C.
45. C. D. Harrington, Mallinckrodt Chemical Works, St. Charles, Mo.
46–55. T. W. Hazard, Jr., Office of Technical Information, Washington, D.C.
56. Henry Heyman, Los Alamos Scientific Laboratory
57. D. W. King, Albuquerque Patent Group
58. S. Lawroski, Argonne National Laboratory
59. G. H. Lee, Chicago Patent Group, Lemont, Illinois
60. Max Linn, Sandia Corporation, Albuquerque, New Mexico
61. F. R. Long, Atomics International, Canoga Park, California
62. S. Marshall, National Lead Company of Ohio, Mt. Healthy Station, Cincinnati, Ohio
63. W. A. Minkler, Bettis Atomic Power Laboratory
64. J. W. Morris, Savannah River Laboratory, Du Pont, Aiken, South Carolina
65. J. C. Nevenzel, University of California, Los Angeles, California
66. H. S. Potter, New York Patent Group, Brookhaven National Laboratory
67. Dennis Puleston, TID, Brookhaven National Laboratory

68. Helen Redman, Los Alamos Scientific Laboratory
69. F. A. Robertson, Savannah River Patent Group, Augusta, Georgia
70. H. M. Roth, ORO
71. H. W. Russell, Battelle Memorial Institute, Columbus, Ohio
72. E. M. Simmons, Battelle Memorial Institute, Columbus, Ohio
73. S. Sturges, Knolls Atomic Power Laboratory
74. C. D. Tabor, Goodyear Atomic Corporation, Piketon, Ohio
75. R. K. Wakerling, Lawrence Radiation Laboratory, Berkeley, California
76. W. K. Woods, Hanford Atomic Products, Richland, Washington
77. W. H. Zinn, General Nuclear Engineering Corporation
78–92. DTIE, AEC