ORNL
MASTER COPY

OAK RIDGE NATIONAL LABORATORY

operated by

UNION CARBIDE CORPORATION

for the

U.S. ATOMIC ENERGY COMMISSION

UNION CARBIDE

ORNL - TM - 511

COPY NO. - 4

DATE - March 8, 1963

R-12,033

HIGH FLUX ISOTOPE REACTOR CRITICAL EXPERIMENT - EQUIPMENT

C. A. Burchsted

SUMMARY

This report describes the mechanical facilities supplied for the first HFIR critical experiment. A 44-in. OD x 36-in. high, multi-chamber core tank with associated piping, storage, and flux monitor drive facilities, were designed and installed in the south reactor room of the Critical Experiments Laboratory in Bldg. 9213, Y-12.

NOTICE

This document contains information of a preliminary nature and was prepared primarily for internal use at the Oak Ridge National Laboratory. It is subject to revision or correction and therefore does not represent a final report. The information is not to be abstracted, reprinted or otherwise given public dissemination without the approval of the ORNL patent branch, Legal and Information Control Department.

Introduction

This report describes the facilities supplied for the HFIR critical experiment; an additional report discussing the operation and nuclear aspects of the experiment will be issued at a later date by the Critical Experiments Laboratory. Although the critical experiment geometry is approximately the same as that proposed for the HFIR, it differs in that a solution fuel is used instead of plate type fuel elements, and in that heavy water is used as the reflector instead of the proposed beryllium. The purpose of the experiment is to obtain experimental data relative to the flux-trap configuration in support of the analytical investigation of the HFIR. The results of the experiment will be utilized in the final detailed calculations and design of the reactor.

Description and Fabrication of Equipment

Core Vessel

The core vessel, Figure 1, consists of a number of concentric aluminum cylinders contained in an aluminum tank 44 in. OD by 36 in. high. The central cylinder, Region I, known as the island or flux-trap, is 5-3/4 in. (14.6 cm) ID as compared to 14 cm ID for the proposed reactor island. The fuel annulus, Region II-A, is 4-7/8 in. (12.4 cm) thick by approximately 30 in. deep. Although the active portion of the HFIR fuel elements will be only 18 in. high, it was necessary to provide extra depth in this annulus to facilitate initial experiments to determine the critical fuel concentration. In subsequent experiments the fuel height will be limited to 18 in. by insertion of the annular can, Region II-B. The thickness of the HFIR fuel annulus will be 12.5 cm. The D_2O reflector, Region III-A, is 7-7/8 in. thick and 18 in. deep, as compared to the 12 in. thick by 24 in. beryllium reflector of the HFIR. A removable plug between Regions III-A and III-B permits increasing the reflector height to match the fuel height during initial fuel concentration experiments. Surrounding the active portion of the core is a 6 in. thick light water reflector, contained in the annular Region IV, Region V below, and Regions II-B and III-B above the fuel region.

Region I is made from 6 in. OD x 1/8 in. wall Type 1100-0 aluminum tubing; the remainder of the vessel is made from Type 6061-T6 aluminum sheet and plate. The annular walls were rolled from 1/8 in. sheet and welded; the bottom and intermediate bottom between Region V and the remainder of the core were made from 1/4 in. plate. To facilitate assembly and to meet dimensional specifications, 1/8 in. deep concentric grooves were milled in the intermediate bottom to position the ends of the rolled cylinders during welding. Overall roundness and concentricity of the walls of the chambers were held well within the specified $\pm$ 1/8 in. tolerance as indicated in Appendix A; however, localized distortions somewhat beyond these limits resulted from welding. A 1/4 in. thick aluminum lid covers regions II and III; neoprene gaskets glued to the underside of the lid prevent leakage, contamination, and intermixture of the fuel solution and D_2O. Since the critical experiment is conducted at atmospheric pressure, rubber tape is adequate to seal the penetrations through the lid. The top of Region IV was left open to facilitate placement of the neutron source and the control plate. The 6 in. tube of Region I was extended 3 in. above the remainder of the core vessel to provide a bearing surface for the safety blade.

PARTS LIST

PART NO.	DWG. NO.	NO. REQD	DESCRIPTION (NAME, SIZE, ETC.)	MATERIAL
1			1⅛ x 1⅛ x ⅛ ALUMINUM ANGLE 6061	ASTM B-211-58T GR. GS IIA CAT. NO. 04-001-7040
2			ANNULAR CAN ⅛ ALUMINUM, TYPE 6061	ASTM B-209 GRADE GS IIA CAT. NO. 04-057-2095
3			¼" PLATE, ALUMINUM, TYPE 6061	ASTM B-209 GR. GS IIA CAT. NO. 04-042-6202
4			6"OD x .125 WALL TUBING, ALUMINUM 1100-H-14	ASTM B-307-58T GR. 990A CAT. NO. 07-263-2570
5			¾" SCH 40 PIPE ALUMINUM	ASTM B-241-58T GR GS IIA
6			2" SCH. 40 PIPE, ALUMINUM, 6061	ASTM B-241-58T GR. GS IIA CAT. NO. 07-212-4070
7,8,9 17,418			¾" PLATE, ALUMINUM, TYPE 6061	ASTM B-209 GR. GS IIA CAT. NO. 04-042-6230
10&11			⅛" PLATE, ALUMINUM, TYPE 6061	ASTM B-209 GR. GS IIA CAT. NO. 04-042-6206
12			¾ NPT PLUG, BOLTARON 6200	CAT. NO. 07-247-5220
13			1½ SCH 40 ALUMINUM 6061	ASTM B-241-58T GR. GS IIA
14			1.050 PLEXIGLASS R9D x 16LG.	
15-ABC			6"OD x .081 WALL TUBING, ALUMINUM	ASTM B-209 GR. GS IIA
16			½" SCH 40 PIPE, ALUMINUM	ASTM B-241-58T GR. GS IIA

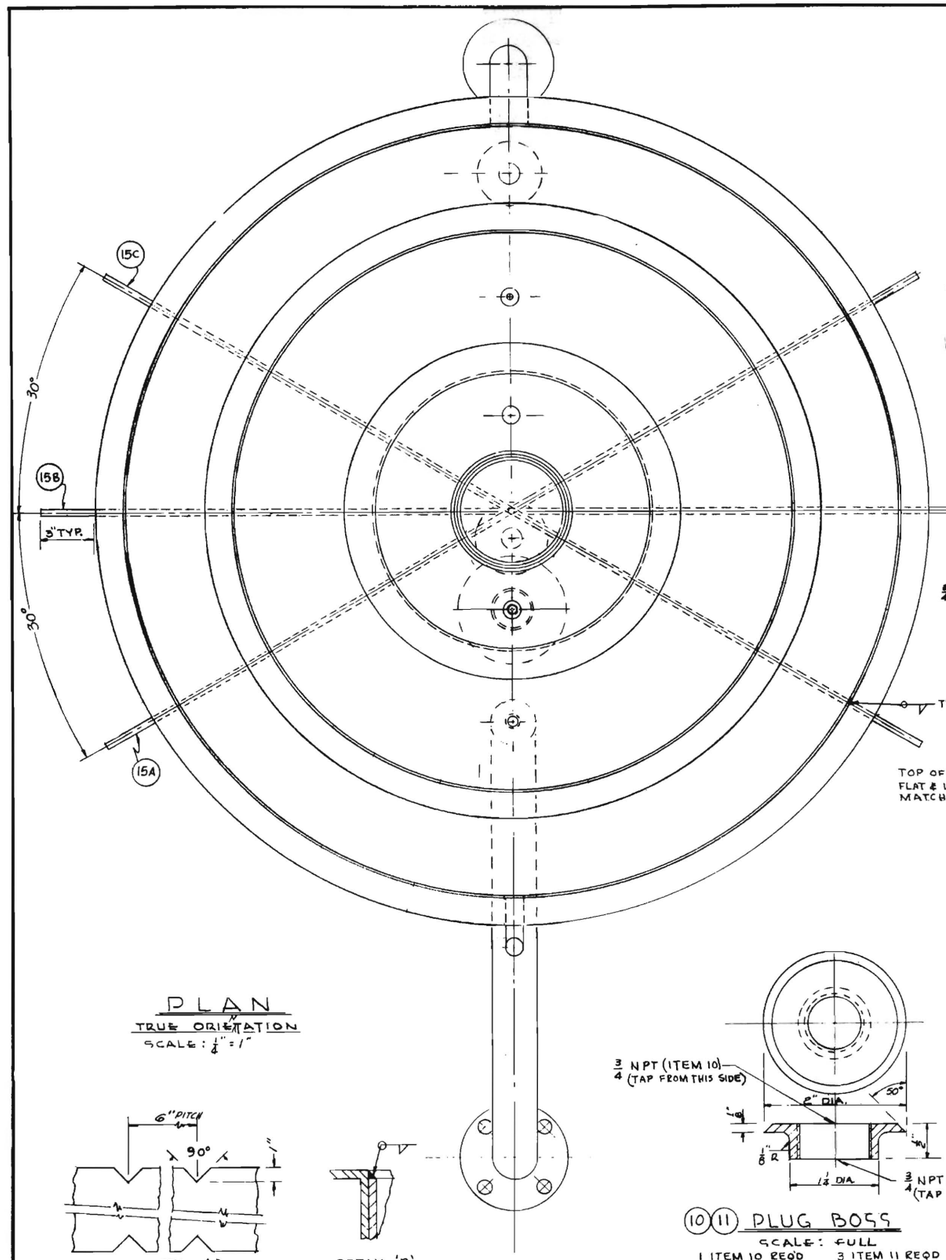

PLAN
TRUE ORIENTATION
SCALE: ⅛" = 1"

DETAIL 'A'

DETAIL 'B'

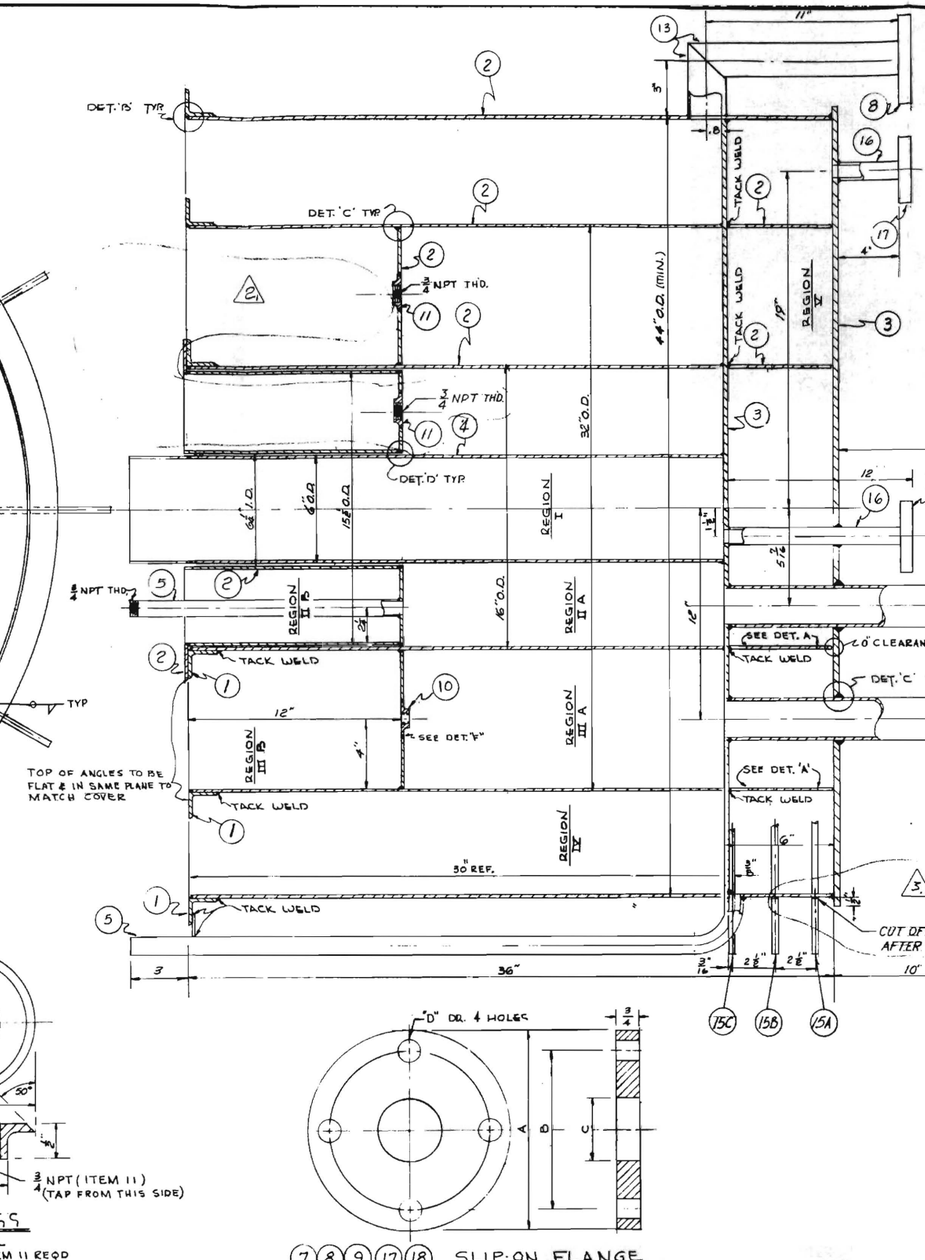

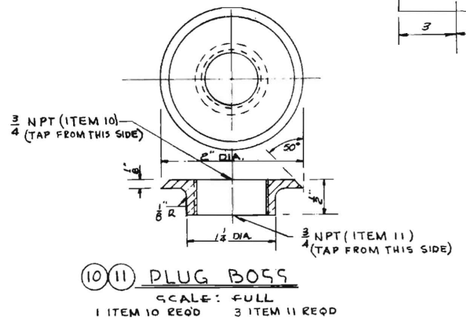

(10)(11) PLUG BOSS
SCALE: FULL
1 ITEM 10 REQD 3 ITEM 11 REQD

(7)(8)(9)(17)(18) SLIP-ON FLANGE
SCALE - NONE

ITEM	NOM. SIZE	A	B	C	D	NO REQ'D
7	3x2	7½	6	2.44	3½ O.D.	2
8	1½	5	3⅜	1.97	2½ O.D.	3
9	¾	3⅜	2¾	1.09	1¼ O.D.	4
17	½	3½	2⅜	.88	1⅛ O.D.	2
18	⅜	3⅛	2¼	¾ NPT	1 O.D.	1

ELEVATION
SCALE: ⅛" = 1"

NOTE:
1. WELDING - IN ACCORDANCE WITH SPEC. Y-ES-9.3-32 & Y-ES-9.3-34
2. ALL REGIONS TO BE INDIVIDUALLY FILLED WITH WATER AND CHECKED FOR LEAKS.
3. TANK TO BE SHOP MEASURED WITHIN 1/32" AND RECORDED ON DWG. AT COMPLETION OF FABRICATION
4. COAT ALL INSIDE SURFACE OF REGION II A AND OUTSIDE SURFACES OF REGION II B WITH HERESITE (RED)
5. ROUNDNESS & CONCENTRICITY TO BE WITHIN ⅛"

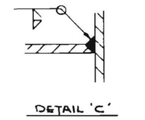

DETAIL 'C'

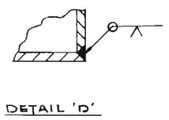

DETAIL 'D'

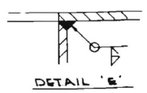

DETAIL 'E'

DETAILS B, C, D, E & F ARE TYPICAL WELD DET.

DETAIL 'F'

LTR	REVISIONS	DATE	APPD	APPD
b	3. ADDED NOTE ITEM 15 2. DELETED ITEM H 5 E 14.	6-19-59	Carl	Carl
a	⚠ WAS 8½ ⚠ WAS 3 15/16 RC.	10/14/59	Carl	Carl

DRAWN	DATE	CHECKED	DATE	APPROVED	DATE
S.I.G.	9-18-59				10/15/59
DESIGNED	DATE	SUBMITTED	DATE	APPROVED	DATE
Carl	9-18-59		9-18-59		

GENERAL SPECIFICATIONS:
1. Break all sharp edges 1/64 max., unless otherwise specified.
2. The fabricator may choose the type, grade or finish of material unless otherwise specified.

MACHINE FINISH SPECIFICATIONS:
1. Finish symbols are in accordance with ASA Standard B46.1-1955.
2. Roughness height values are the maximum arithmetical average deviation from the mean surface, expressed in microinches.
3. For surfaces not otherwise indicated, roughness height shall not exceed √.

CLASSIFICATION: Unclassified JRM

LIMITS ON DIMENSIONS UNLESS OTHERWISE SPECIFIED
FRACTIONS: ± 1/64
DECIMALS: ±
ANGLES: ± ½°
SCALE: AS SHOWN

CORE TANK SUPPORT — TD-D-3769
REFERENCE DRAWINGS — DWG. NO.
H.F.I.R. — BLDG. NO. 9213

H.F.I.R. CRITICAL EXP.
CORE TANK

OAK RIDGE NATIONAL LABORATORY
OPERATED BY
UNION CARBIDE NUCLEAR COMPANY
DIVISION OF UNION CARBIDE CORPORATION
OAK RIDGE, TENNESSEE

SUBMITTED	ACCEPTED	APPROVED
J.R. McWherter 9-18-59	9/18	

TD-D-3767 REV. 0

FIGURE 1

All surfaces of the core vessel in contact with the uranyl nitrate fuel solution were given a baked coating of Heresite (red), a phenol base resin of low neutron absorption, for corrosion resistance; on receipt of the vessel at the Critical Experiments Laboratory, a number of pin-hole leaks in this coating were discovered, however, necessitating recoating of much of these surfaces with Glyptol. Two inch drain lines from Regions II-A and III-A permit rapid dumping of the reactor fluids in the event of an emergency.

Storage Systems

The fuel and D_2O storage systems are shown schematically in Figure 2. As can be seen from the photograph, Figure 3, this layout was changed somewhat during installation because of space restrictions. The fuel is stored in a stainless steel slab tank 5 ft x 5 ft x 2-3/4 in. thick; this geometry is safe from the standpoint of criticality. The D_2O is stored in a pair of modified stainless steel 55-gal drums. The valves, pump volutes and impellers, and piping up to the connections to the core vessel are of stainless steel to minimize contamination of the fuel solution and of the D_2O by corrosion. Neoprene gaskets are used in all flanged joints; all welds were fluid-penetrant inspected upon completion and the entire system was soap-bubble tested under 5 psig air; a higher test pressure was considered inadvisable in view of the 7 psi maximum pressure specified for the D_2O storage drums.

All valves are of the diaphragm type (Hills-McCanna) and pumps are of the canned motor type. The D_2O feed pump is a Model C-2 Chempump; the fuel feed pump is an in-line mounted, Model E Chempump. The 3 in. dump valves and 3/4 in. feed lines are air operated and are controlled manually from the console. A valved bypass from each of the pump discharge lines to the respective storage tanks was provided to permit control of the pumping rates using the constant capacity pumps, and to permit mixing of the reactor fluids prior to pumping them into the core vessel. Both storage systems and the sight glasses for Regions II-A and III-A are vented to their respective regions in the core vessel in order to operate as completely closed systems.

Safety and Control Equipment

The neutron source, cadmium control blade, and sight glasses for Regions II-A and III-A were provided by the Critical Experiments Laboratory. The control blade drive and the photo-cell followers of the sight glasses are fitted with selsyn transmitters; Veeder-Root counters in the control room, driven by the selsyn receivers, provide a numerical read-out of the control rod position and the liquid levels of the fuel and D_2O in the core to the nearest 0.01 inch.

Emergency shut-down of the reactor is effected by the insertion, by gravity, of a cadmium safety blade into Region I, and by opening the fuel and D_2O dump valves, all upon signal from radiation detectors. The safety blade, Figure 4, is a thin (0.020 in. thick) sheet of cadmium contained, for rigidity, in a seal-welded stainless steel jacket. Because a flux-monitor, having a vertical traverse of 18 in. also operates within Region I, it was necessary to leave one side of the blade open and to make the total assembly more than double the active depth of the fuel solution to prevent interference in any position of the monitor.

NOTES-
1. ALL PIPING TO BE S.S. SCH. 40 EXCEPT WHERE NOTED.
2. ALL FITTINGS TO BE S.S. WELD END FOR 150# SERVICE.
3. ALL FLANGES TO BE S.S. FOR 150# SERVICE
4. GASKET MATERIAL
5. D_2O STORAGE TANKS ARE 55 GAL. S.S.
6. ALL PIPE WELDING TO CONFORM WITH SPEC. Y-65-9.3-11 & Y-65-9.3-12

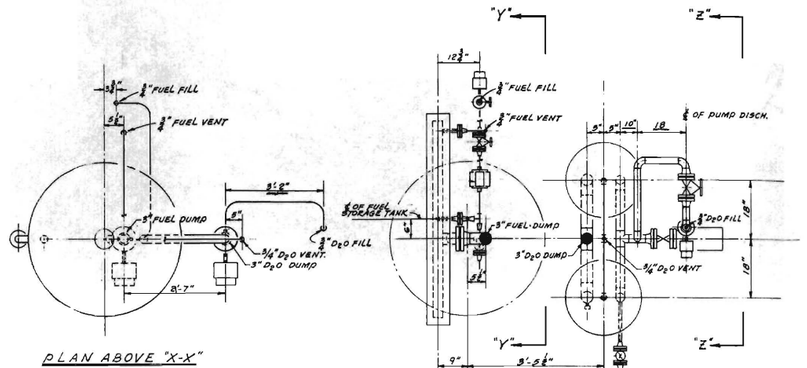

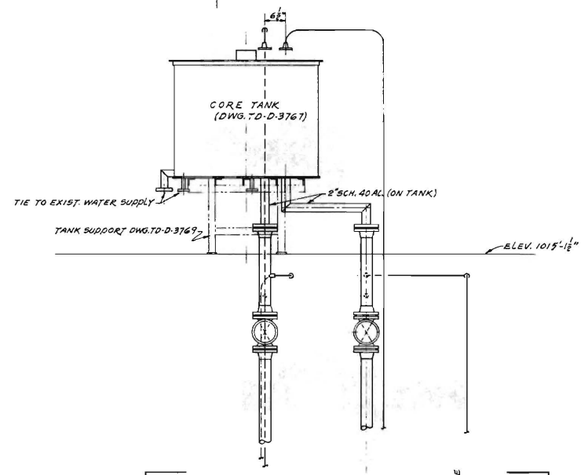

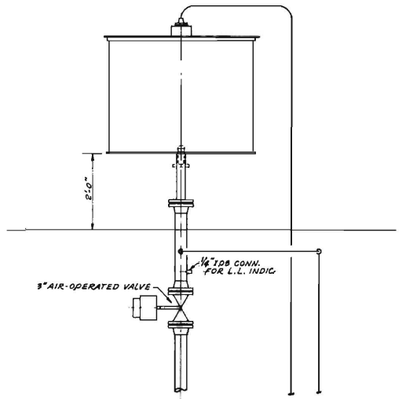

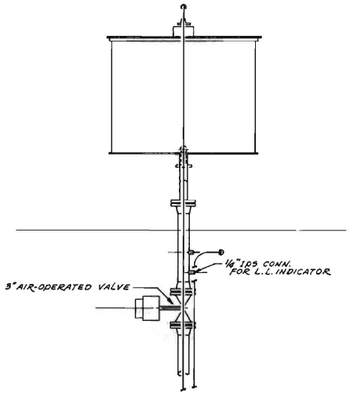

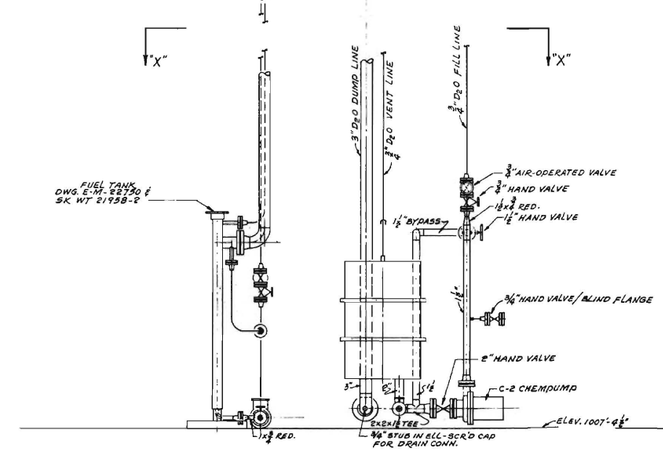

SIDE ELEV.

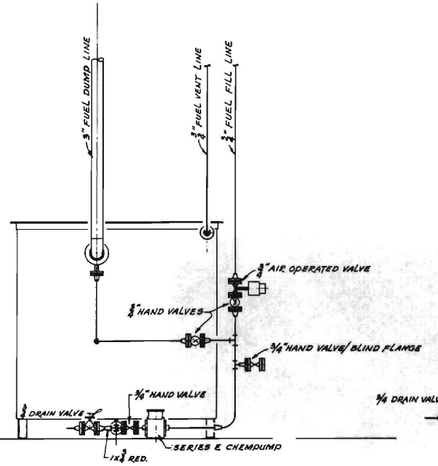

ELEV. "Y-Y"

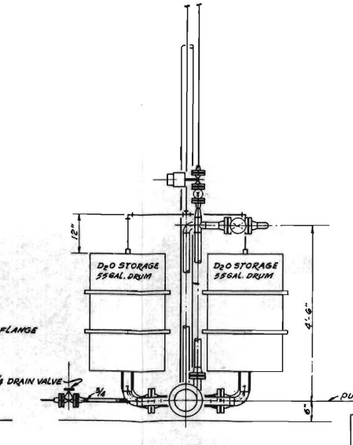

ELEV. "Z-Z"

NO.	REVISIONS				DATE	APPD	APPD
DRAWN	DATE	SUBMITTED	DATE	APPROVED		DATE	
W. Robinson	9/29/59	Carl	10-19-59				
DESIGNED	DATE	APPROVED	DATE	APPROVED		DATE	
CHECKED	DATE	APPROVED	DATE	APPROVED		DATE	
			10-20-59				

CORE TANK	TD-D-3767
CORE TANK SUPPORT	TD-D-3769
FUEL STORAGE TANK, DETAILS	9K-WT-21958-2
CRITICAL EXPERIMENTS S.S. SLAB TANK, DETAILS	E-M-22750
REFERENCE DRAWINGS	DWG. NO.
	BLDG. NO.

CLASSIFICATION: Unclassified J.R.M.

LIMITS OR DIMENSIONS UNLESS OTHERWISE SPECIFIED
FRACTIONS ±
DECIMALS ±
ANGLES ±
SCALE: 3/16"=1'-0"

HFIR CRITICAL EXPERIMENT PIPING SYSTEM

OAK RIDGE NATIONAL LABORATORY
OPERATED BY
UNION CARBIDE NUCLEAR COMPANY
A DIVISION OF UNION CARBIDE CORPORATION
OAK RIDGE, TENNESSEE

SUBMITTED	ACCEPTED	DATE	APPROVED
J.R.M. Wheeler		9/1	

TD-E-3770 REV.

FIGURE 2

PARTS LIST

PART NO.	DWG. NO.	NO. REQD	DESCRIPTION (NAME, SIZE, ETC.)	MATERIAL
1	THIS DWG.	1	0.025 TK. X 13 5/8 X 17"LG CADMIUM SHEET	CAT "04-345-6545
2	THIS DWG.	1	0.063 TK X 14 5/8 X 48"LG. S.S. SHEET	ANY 300 SERIES S.S.
3	THIS DWG.	1	0.028 TK X 14 5/8 X 18"LG. S.S. SHEET	ANY 300 SERIES S.S.
4	THIS DWG.	1	0.125 TK X 5 1/2" DIA S.S. SHEET	ANY 300 SERIES S.S.
5	THIS DWG.	1	5/16-18 NC X 1"LG S.S. SOCKET HD. CAP SCW.	ANY 300 SERIES S.S.
6	THIS DWG.	1	1/8 X 1/2 X 14"LG S.S. BAR	ANY 300 SERIES S.S.
7	THIS DWG.	1	5/16-18 NC HEX HD. JAM NUT	ANY 300 SERIES S.S.

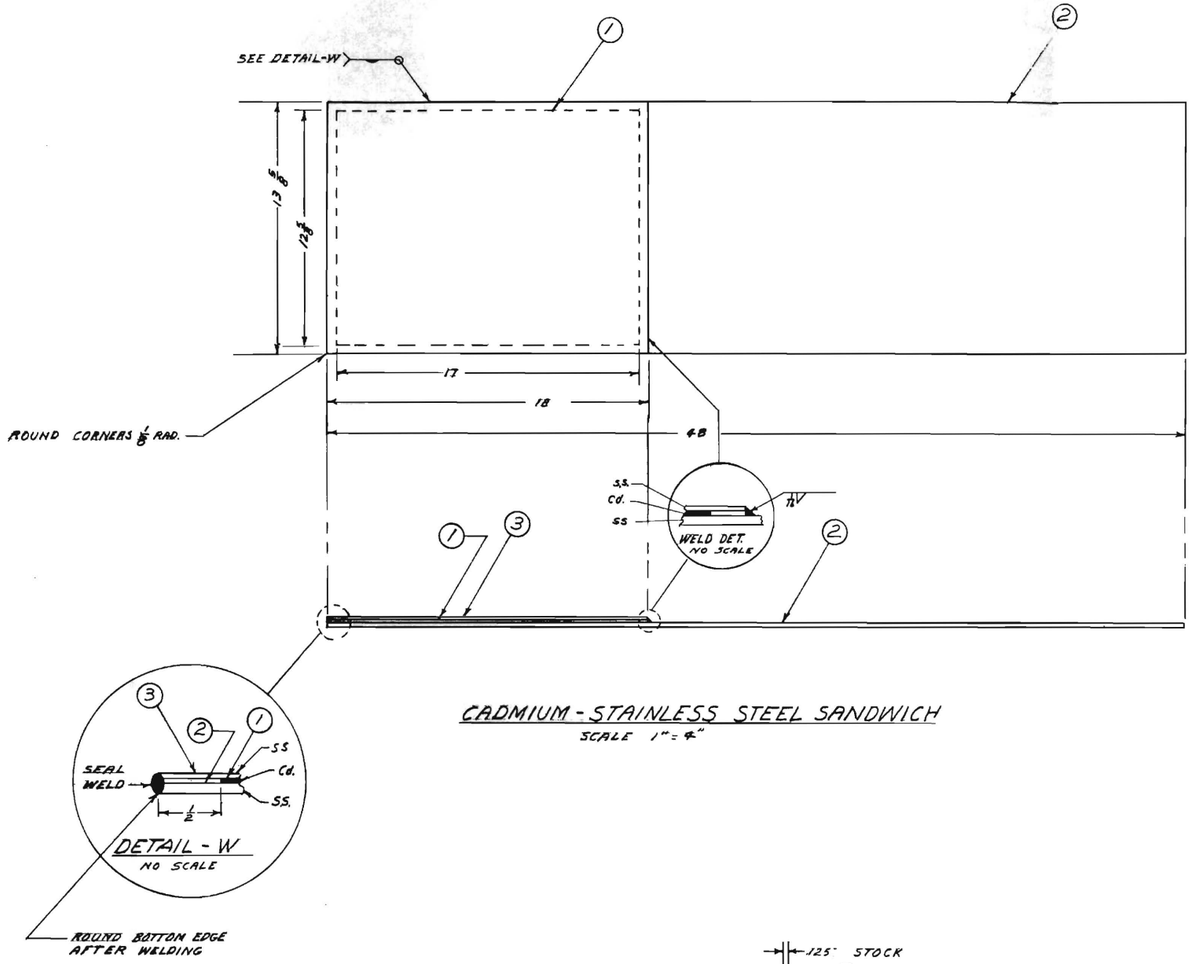

CADMIUM - STAINLESS STEEL SANDWICH

SCALE 1" = 4"

DETAIL - W

NO SCALE

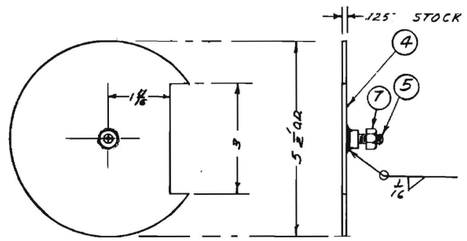

ITEM 4,5 & 7

SCALE 1" = 2"

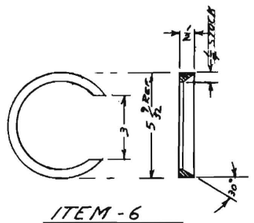

ITEM - 6

NO SCALE

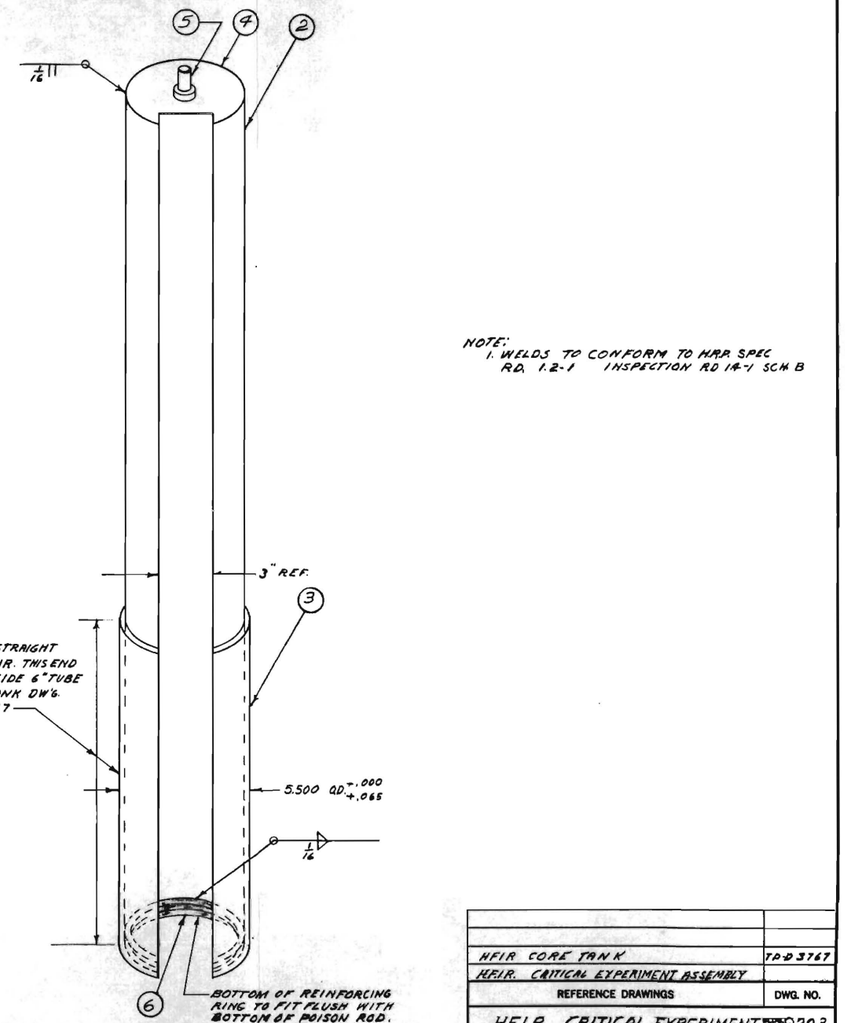

NOTE:
1. WELDS TO CONFORM TO H.R.P. SPEC R.D. 1.2-1 INSPECTION R.D. 14-1 SCH. B

LTR	REVISIONS	DATE	APPD	APPD
DRAWN KE Carter	DATE	CHECKED CAB	DATE 10-19-59	APPROVED	DATE
DESIGNED	DATE	SUBMITTED J.A. Lane	DATE 10-19-59	APPROVED	DATE

GENERAL SPECIFICATIONS:
1. Break all sharp edges 1/64 max., unless otherwise specified.
2. The fabricator may choose the type, grade or finish of material unless otherwise specified.

MACHINE FINISH SPECIFICATIONS:
1. Finish symbols are in accordance with ASA Standard B46.1-1955.
2. Roughness height values are the maximum arithmetical average deviation from the mean surface, expressed in microinches.
3. For surfaces not otherwise indicated, roughness height shall not exceed √.

CLASSIFICATION: NOT CLASSIFIED — CAB

LIMITS ON DIMENSIONS UNLESS OTHERWISE SPECIFIED
FRACTIONS: ± 1/32
DECIMALS: ±
ANGLES: ± 1°
SCALE: AS NOTED

H.F.I.R. CORE TANK	TD-D 3767
H.F.I.R. CRITICAL EXPERIMENT ASSEMBLY	
REFERENCE DRAWINGS	DWG. NO.
H.F.I.R. CRITICAL EXPERIMENT	SCHEME NO. 9203

POISON ROD

OAK RIDGE NATIONAL LABORATORY
OPERATED BY
UNION CARBIDE NUCLEAR COMPANY
DIVISION OF UNION CARBIDE CORPORATION
OAK RIDGE, TENNESSEE

SUBMITTED	ACCEPTED	APPROVED
J.R. McWherter 10-19-59		

7/9 TD-D-3780 REV

FIGURE 4

Flux Monitors

Flux measurements in the critical experiment are made with miniature counters supported from the drive assembly shown in Figure 5. An exploded view of a typical monitor is shown in Figure 6. The sensitive element is approximately 1 in. long and is located about 1-1/2 in. from the bottom tip of the completed counter assembly. The jacket, cap, and 1/4-in.-OD "dog leg" counter tube are made from Type 1100 aluminum; the jacket and cap are attached to the tube by an epoxy resin after installation of the cable and sensitive element. After assembly the counter is made water-tight by a coat of Glyptol.

Because the counter tube forms one side of the electrical circuit, nylon was used as the bearing material for mounting the counters in the core vessel. In addition to electrically isolating the counters from the core tank and from one another, the nylon also provides greasless lubrication. Two types of bearings are used, the cover-plate supported model used in Regions II-A and IV, and the longer model in Regions II-B and III-B. The latter type screw into threaded holes in the bottom plates of those regions, preventing leakage of light water into the fuel or reflector fluids, and are supported at the upper end by holes in the cover plate of the reactor vessel. The cover plate is doweled to the reactor tank to assure accurate alignment of the bearings. The Amphenol plug at the top of the counter tube provides both an electrical coupling between the counter and its preamplifier, and a mechanical counter between the tube and its drive mechanism.

The design details of the monitor drive assembly are shown in Figure 7. This consists essentially of a table, raised and lowered by a screw drive, on which is mounted a motor and pulley system for the rotating counters in Regions II, III, and IV, and a horizontal screw drive for the reciprocating counter in Region I. To avoid distortion of the signal, it was necessary to mount the counter preamplifier as close as possible to the sensitive element, and to provide a fixed relationship between the position of the counter and its preamplifier. The Region I (reciprocating) counter tube is attached directly to its preamplifier and the combined assembly is moved by the screw drive. Nylon blocks electrically isolate the assembly from the remainder of the drive system. The rotating counter tubes attach by Amphenol plugs to short lengths of stainless steel tubing, to which are rigidly attached the nylon drive pulleys; the hubs of the pulleys serve as bearing surfaces. The counter preamplifiers attach to the opposite ends of the stainless steel tubes by means of Amphenol plugs, and rotate with the counter tubes.

Position-indicating selsyn transmitters are mounted at one end of the Region I monitor drive screw, on the drive motor of the rotating counter pulley system, and on the table elevating drive; Veeder-Root tally counters on the control console, driven by the selsyn receivers, provide a read-out of the flux monitor positions. Since these selsyns actually indicate the positions of the driving mechanisms, considerable care must be exercised in mounting the counter tubes to their respective drives to assure correspondence between the indicated and actual positions of the sensitive elements of the flux monitors. Originally a TV antenna rotator was used to drive the rotating counter pulley system; this was later replaced with a 1/40 HP, 1000 rpm universal motor and 900:1 speed reducer.

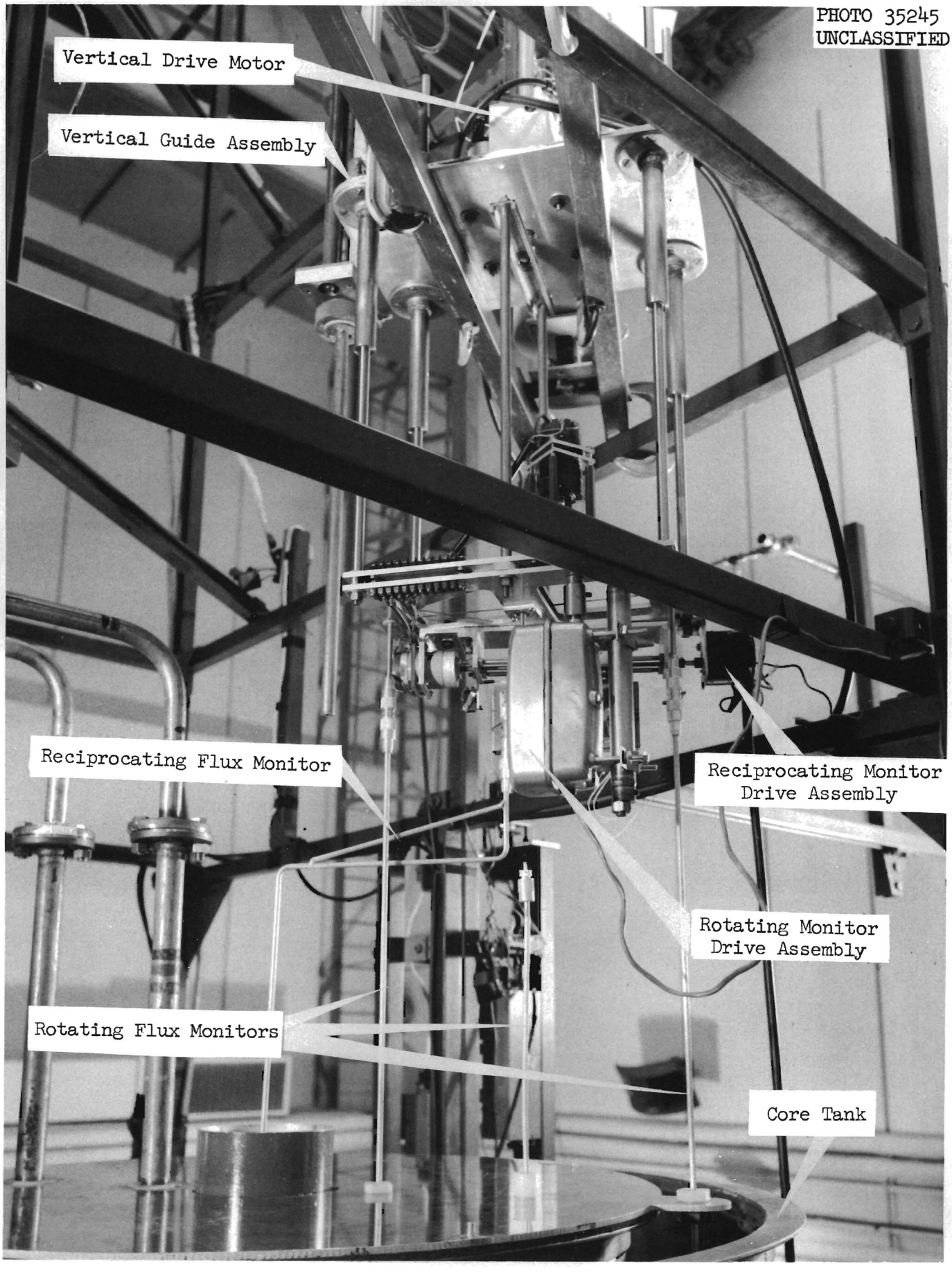

FIGURE 5. - HFIR Critical Experiment -- Flux Monitor Drive Assembly

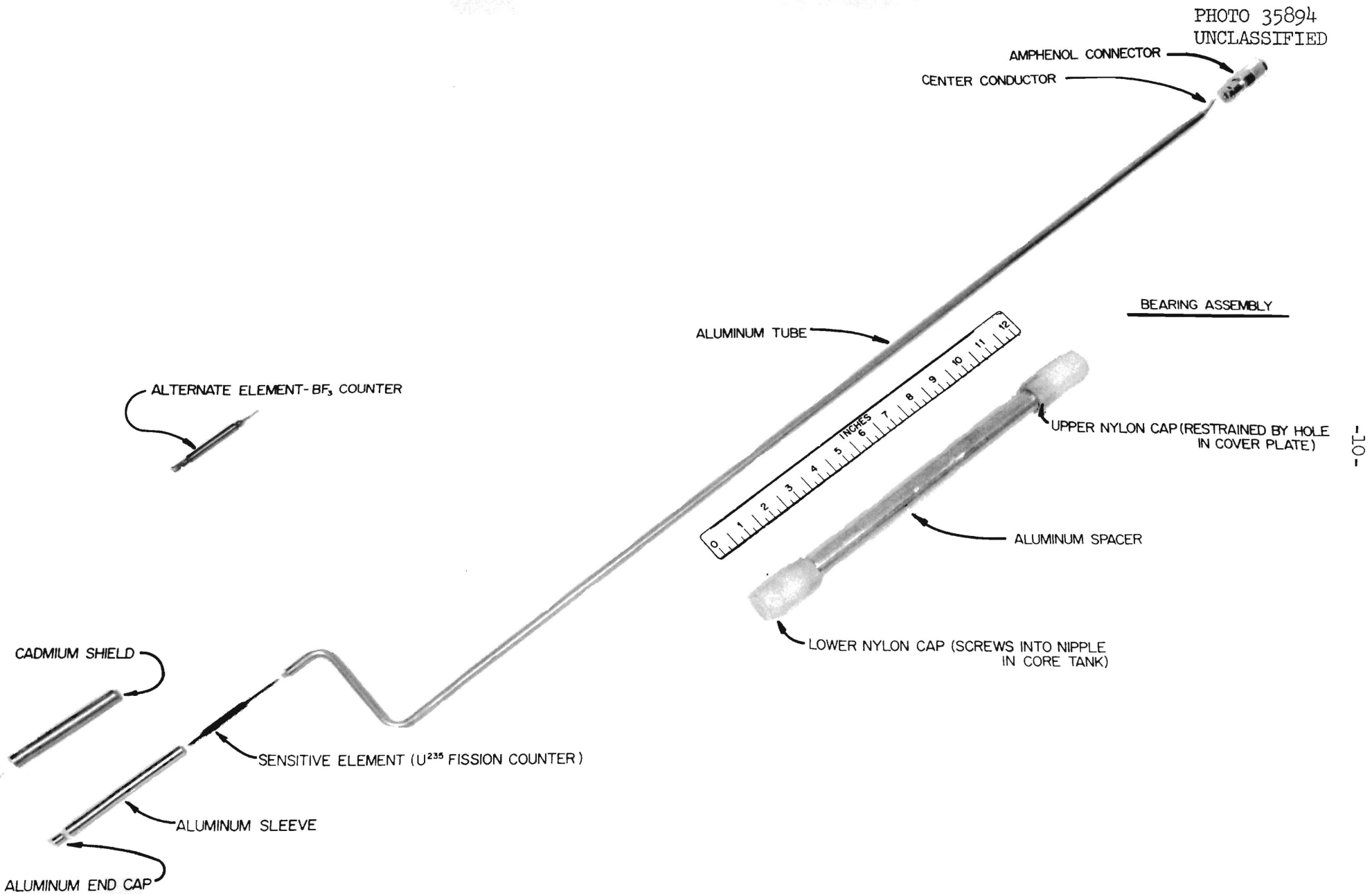

FIGURE 6. Typical Flux Monitor Assembly - Exploded View

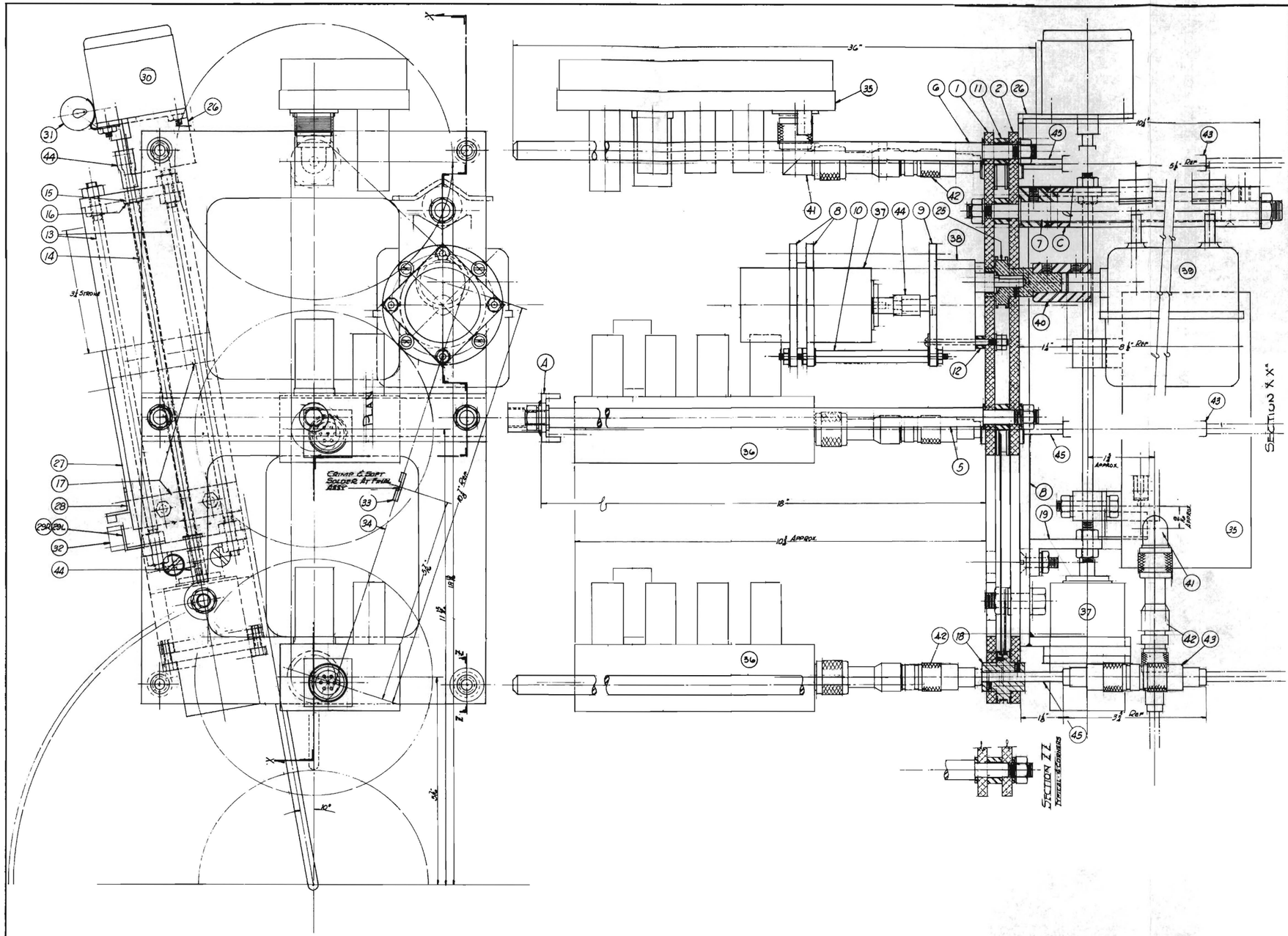

PARTS LIST

PART NO	DWG NO	NO REQD	DESCRIPTION
1 THRU 19	TD-E-3792		
20 THRU 29	TD-D-3793		
30	FURNISHED	1	BODINE GEAR MOTOR - 60 RPM - TYPE KYC-23RB
31		1	CAPACITOR - .95 TO 1.05 MFD - VC1164B
32		2	MICRO SWITCH - AN3234-1-V3-1 W/ JV5 ACTUATOR
33		1	CABLE CONNECTOR
34			CABLE
35		2	PRE-AMP ASSY - MODEL 219B SER NO 45B
36		2	PRE-AMP ASSY - MODEL 208B SER NO. 502
37		2	'TELESYN' SER NO 13330 TP. 1HG
38		1	GEAR TRAIN - 72 TO 1 (MADE FROM BODINE GEAR MOTOR)
39		1	'ALPROCO' TENEROTOR W/ CLAMPS & CONTROL
40		1	½" SHAFT COUPLING 'BOSTON GEAR' CR-8
41		2	AMPHENOL - 90° CONNECTOR
42		4	AMPHENOL - ¼" TUBE TO CONNECTOR
43		3	AMPHENOL - ¼" TUBE TO ½" TUBE COUPLING
44		3	COUPLING - MAKE FROM 5/16" I.D. x ⅛ WALL TYGON TUBING
45	THIS DWG	3	¼ O.D. x .065 WALL x 2⅝" LG. SST TUBING
A	TD-E-3792	1	WELDED ASSY (SPEC: YES-9.3-32)
B	TD-D-3793	1	(SPEC: YES-9.3-32)
C		1	(SPEC: RD-1.2-1, SCH C)
	STOCK	16	PLAIN WASHER ⅜ I.D. x ¾ OD x .072 THK
		8	PLAIN WASHER ¼ I.D. x ⅝ OD x .056 THK.
		12	PLAIN WASHER FOR #12 SCREW
		28	PLAIN WASHER FOR #8 SCREW
		1	HEX SEMI-FIN NUT - ½-13 NC
		10	" - ⅜-16 NC
		8	" - ¼-20 NC
		8	" - #12-24 NC
		26	" - #8-32 NC
		2	CAP SCREW - HEX - ⅜-16 NC x 1¼ LG
		2	MACH SCREW FL. HD - #12-24 NC x 1 LG
		4	HEX OR SQ. BOLT - #12-24 NC x 1⅜ LG
		4	MACH SCREW RD HD - #12-24 NC x ½ LG
	FURNISHED	4	MACH SCREW FIL. HD. - #8-32 NC x 2½ LG
	STOCK	2	HEADLESS SET SCR. CUP PT - ¼-20 NC x ⅜ LG
		8	" #6-32 NC x 3/16 LG
		4	" #6-32 NC x ⅛ LG

DETAILS SHEET #2	TD-D-3793
DETAILS SHEET #1	TD-E-3792
REFERENCE DRAWINGS	DWG. NO.
HFIR	BLDG NO. 9213

CLASSIFICATION: NOT CLASSIFIED

HFIR CRITICAL EXP. MONITOR DRIVES ASSEMBLY

LIMITS ON DIMENSIONS UNLESS OTHERWISE SPECIFIED
FRACTIONS: ± 1/64
DECIMALS: ± .005
ANGLES: ±

OAK RIDGE NATIONAL LABORATORY
OPERATED BY
UNION CARBIDE NUCLEAR COMPANY
A DIVISION OF UNION CARBIDE CORPORATION
OAK RIDGE, TENNESSEE

SUBMITTED: J. R. McNamara 10-28-57 | ACCEPTED: [signature] | APPROVED

SCALE: FULL

TD-E-3791 REV 1

NO.	REVISIONS	DATE	APPD	APPD

FIGURE 7

The selsyn transmitter for this drive is operated through the gear head of a 25 rpm (72:1 gear ratio) Bodine motor, providing, with the 1:10 ratio of the Veeder-Root counter, a position indication to the nearest 1/2 degree.

The reciprocating monitor for Region I is driven by a 60 rpm Bodine motor through a 1/4-20 drive screw, permitting the monitor to be moved from the edge to the center of the 6 in. tube in one minute. The horizontal position of this monitor is indicated to the nearest 0.005 in. Originally a modified prototype control rod for the Bulk Shielding Facility (Swimming Pool) was used for the vertical drive; this was later replaced with a screw drive having a more accurate position-indicating selsyn. The four vertical guide rods of the drive assembly minimize lateral displacement of the flux monitors due to the unavoidable eccentric loading of the moving table and the change in the center of gravity with motion of the monitors and their preamplifiers. The guide rod bearings are rigidly fixed to a stationary table (See Figure 5) which in turn is clamped to the framework surrounding the critical experiment. Ball bushings in the guide rod bearings minimize friction.

The monitor drive assembly is completely separate from the core vessel, the only connections being through the counter tube bearings which attach to the vessel. The cable which drives the rotating counters is locked by set screws into the pulleys, a spring-loaded idler pulley is located between the drive pulley and the Region IV pulley to take up slack and assure uniform rotation of all pulleys in the system. Because it has been necessary to replace the tension spring several times, the necessity of an additional idler between the drive pulley and the Region I pulley, or of individual cables from the drive pulley to each driven pulley, is indicated for any future drive system. Only one drive motor would be recommended, however, because of the very limited amount of space available.

When operating the experiment with the top reflector, that is, with light water in Regions II-B and III-B, it is necessary to maintain a water tight seal between these and the fuel and reflector regions. Rotating counters were required for these chambers because of the necessity of maintaining this seal, which is provided by the counter tube bearings. In plotting the flux measurements made in these regions it is necessary, therefore, to translate the angular position indications to their respective projections on the vessel diameter. The "dog legs" of the counter tubes permit making measurements across the entire thickness of the chamber while necessitating only a single penetration into the chamber. A reciprocating monitor was specified for Region I because of the necessity of also providing for operation of the safety blade in that region. Flux measurements in the bottom reflector, Region V, are made by drawing miniature counters through the three 1/4 in. diametrical tubes which are indicated in Figure 1. These counters are positioned by screw drives of the same type as used for the control and safety blades and for the vertical drive of the monitor drive assembly discussed above. One of these tubes is located directly below the intermediate bottom, and the others are spaced at 2-1/2 in. intervals. Since the flux is essentially symetrical about the axes of the core, flux measurements in the top reflector are not required. Because of distortion due to welding, these tubes are slightly bowed downward. The effect of this bowing must be considered in flux measurements made in this region.

Some inaccuracies will also be introduced into the flux measurements due to compromises necessary in the design and fabrication of the core vessel. Most important of these is that, due to the annular spaces between the can which constitutes Region II-B and the walls of Region II-A, the fuel level must be very carefully controlled to prevent it from rising into these spaces. Other inaccuracies may be introduced by the flux monitors themselves or by "holes" in the reflector due to drain and vent lines. A somewhat heavier plate than might have been desired was used for the intermediate bottom, but was necessitated by the need of grooves to maintain the concentricity and roundness of the annular cylinders of the core. A certain degree of inaccuracy may also be introduced by the slight bowing of the bottom of the core tank under the load of the reactor fluids.

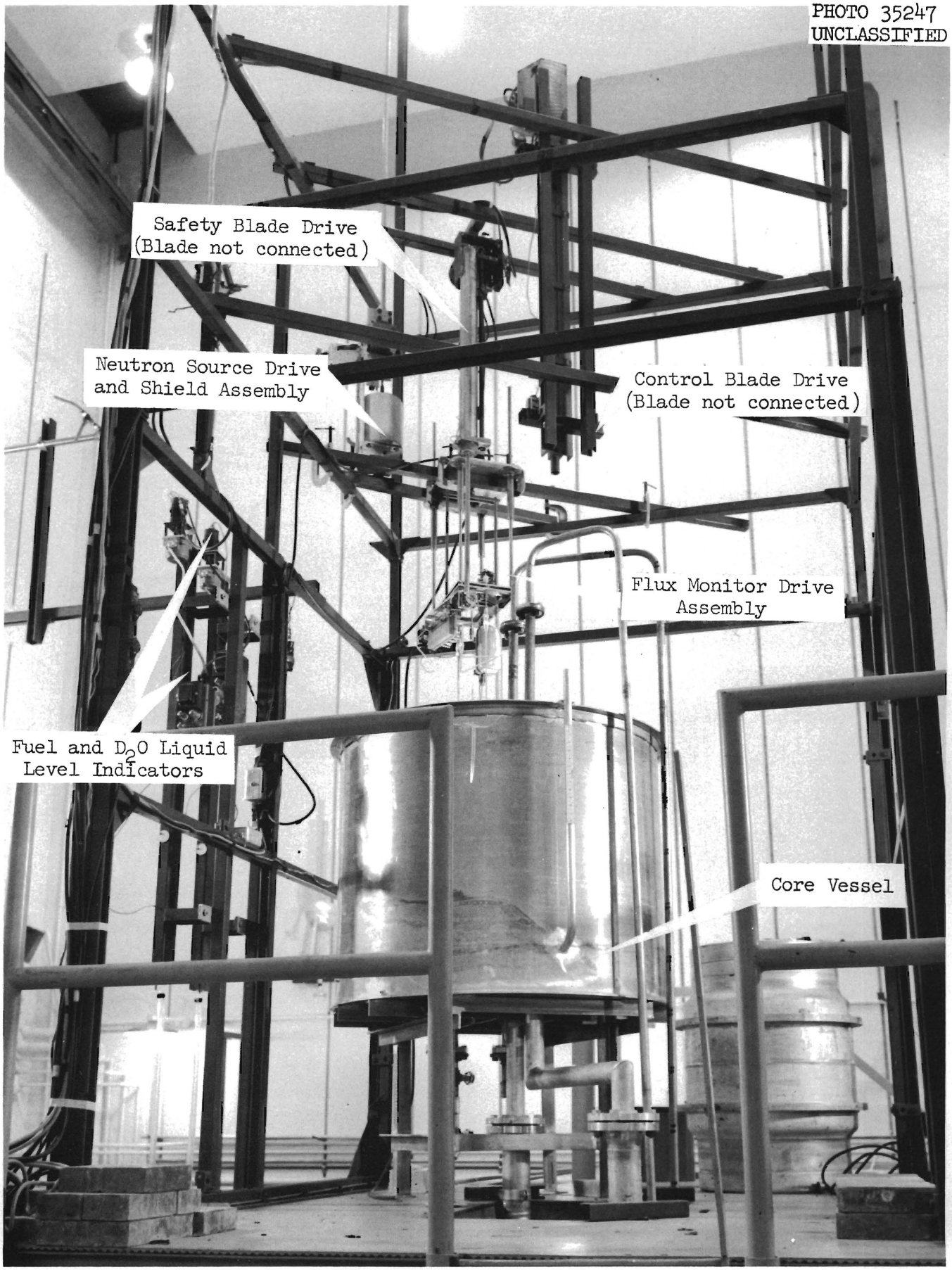

FIGURE 8. - Overall View of Core

Appendix A

The following tabulation shows the variation in annuli thickness of the HFIR critical experiment core vessel. The measurements were made at four stations 90° apart, at 6-in. intervals from top to bottom. Station A corresponds to the vent pipe from region V. Since region III-B has a false bottom 12 inches from the top of the vessel, only three measurements could be made in region III, however, the variations can to some degree be inferred by comparison of corresponding measurements in regions II and IV.

Region II: nominal annulus thickness = 4.875 in.

Elev.	Sta. A	Sta. B	Sta. C	Sta. D
2 in.	4.875	4.921	4.843	4.812
6 in.	4.880	4.921	4.870	4.843
12 in.	4.890	4.921	4.875	4.859
18 in.	4.875	4.921	4.875	4.843
24 in.	4.875	4.921	4.869	4.843
30 in.	4.875	4.906	4.875	4.843
Average	4.878	4.919	4.869	4.841

Total variation: 4.876 + 0.045 - 0.064
Maximum absolute variation: 0.109 in.

(Region II contains fuel)

Region III (III-B only) nominal annulus thickness = 7.875 in.

Elev.	Sta. A	Sta. B	Sta. C	Sta. D
2 in.	7.843	7.845	7.906	7.890
6 in.	7.843	7.843	7.906	7.890
12 in.	7.875	7.859	7.937	7.890
Average	7.854	7.848	7.916	7.890

Total variation: 7.877 + 0.060 - 0.034
Maximum absolute variation: 0.094 in.

(Region III contains D_2O)

Region IV: nominal annulus thickness = 5.875 in.

Elev.	Sta. A	Sta. B	Sta. C	Sta. D
2 in.	5.815	5.875	5.875	5.921
6 in.	5.835	5.843	5.875	5.937
12 in.	5.790	5.828	5.812	5.859
18 in.	5.865	5.859	5.890	5.890
24 in.	5.875	5.859	5.890	5.875
30 in.	5.865	5.875	5.890	5.875
Average	5.841	5.857	5.887	5.893

Total variation: 5.866 + 0.071 - 0.076
Maximum absolute variation: 0.147 in.

(Region IV contains H_2O)

Appendix A (continued)

Region II-B (Light water reflector insert over fuel)
Nominal annulus thickness = 4.375 in.

Elev.	Sta. A	Sta. B	Sta. C	Sta. D
2 in.	4.380	4.380	4.390	4.390
6 in.	4.312	4.375	4.375	4.406
12 in.	4.375	4.359	4.360	4.365
Average	4.356	4.371	4.375	4.387

Total variation: 4.372 = 0.034 - 0.060
Maximum absolute variation: 0.094 in.

Appendix B

List of Drawings

Dwg. No.	
TD-D-3767	HFIR Critical Experiment, Core Tank
TD-E-3791	Monitor Drives - Assembly
TD-D-3793	Monitor Drives - Details, #2
TD-D-3777	Cover Plate
TD-D-3769	Core Tank Support
TD-E-3770	Piping System
TD-E-3792	Monitor Drives - Details, #1
TD-D-3779	Miscellaneous Details
TD-D-3780	Poison Rod
EM-22750	SS Slab Tank, Details
TD-D-3769	HFIR Critical Experiment, Core Tank Support

Distribution

1-3. DTIE, AEC
4. M. J. Skinner